AUTHENTICATED
U.S. GOVERNMENT
INFORMATION
GPO

Federal Register

8–10–00 Thursday
Vol. 65 No. 155 Aug. 10, 2000
Pages 48885–49188

The **FEDERAL REGISTER** is published daily, Monday through Friday, except official holidays, by the Office of the Federal Register, National Archives and Records Administration, Washington, DC 20408, under the Federal Register Act (44 U.S.C. Ch. 15) and the regulations of the Administrative Committee of the Federal Register (1 CFR Ch. I). The Superintendent of Documents, U.S. Government Printing Office, Washington, DC 20402 is the exclusive distributor of the official edition.

The **Federal Register** provides a uniform system for making available to the public regulations and legal notices issued by Federal agencies. These include Presidential proclamations and Executive Orders, Federal agency documents having general applicability and legal effect, documents required to be published by act of Congress, and other Federal agency documents of public interest.

Documents are on file for public inspection in the Office of the Federal Register the day before they are published, unless the issuing agency requests earlier filing. For a list of documents currently on file for public inspection, see http://www.nara.gov/fedreg.

The seal of the National Archives and Records Administration authenticates the Federal Register as the official serial publication established under the Federal Register Act. Under 44 U.S.C. 1507, the contents of the **Federal Register** shall be judicially noticed.

The **Federal Register** is published in paper and on 24x microfiche. It is also available online at no charge as one of the databases on GPO Access, a service of the U.S. Government Printing Office.

The online edition of the **Federal Register** is issued under the authority of the Administrative Committee of the Federal Register as the official legal equivalent of the paper and microfiche editions (44 U.S.C. 4101 and 1 CFR 5.10). It is updated by 6 a.m. each day the **Federal Register** is published and it includes both text and graphics from Volume 59, Number 1 (January 2, 1994) forward.

GPO Access users can choose to retrieve online **Federal Register** documents as TEXT (ASCII text, graphics omitted), PDF (Adobe Portable Document Format, including full text and all graphics), or SUMMARY (abbreviated text) files. Users should carefully check retrieved material to ensure that documents were properly downloaded.

On the World Wide Web, connect to the **Federal Register** at http://www.access.gpo.gov/nara. Those without World Wide Web access can also connect with a local WAIS client, by Telnet to swais.access.gpo.gov, or by dialing (202) 512-1661 with a computer and modem. When using Telnet or modem, type swais, then log in as guest with no password.

For more information about GPO Access, contact the GPO Access User Support Team by E-mail at gpoaccess@gpo.gov; by fax at (202) 512–1262; or call (202) 512–1530 or 1–888–293–6498 (toll free) between 7 a.m. and 5 p.m. Eastern time, Monday–Friday, except Federal holidays.

The annual subscription price for the **Federal Register** paper edition is $638, or $697 for a combined **Federal Register,** Federal Register Index and List of CFR Sections Affected (LSA) subscription; the microfiche edition of the **Federal Register** including the Federal Register Index and LSA is $253. Six month subscriptions are available for one-half the annual rate. The charge for individual copies in paper form is $9.00 for each issue, or $9.00 for each group of pages as actually bound; or $2.00 for each issue in microfiche form. All prices include regular domestic postage and handling. International customers please add 25% for foreign handling. Remit check or money order, made payable to the Superintendent of Documents, or charge to your GPO Deposit Account, VISA, MasterCard or Discover. Mail to: New Orders, Superintendent of Documents, P.O. Box 371954, Pittsburgh, PA 15250–7954.

There are no restrictions on the republication of material appearing in the **Federal Register.**

How To Cite This Publication: Use the volume number and the page number. Example: 65 FR 12345.

SUBSCRIPTIONS AND COPIES

PUBLIC	
Subscriptions:	
Paper or fiche	**202–512–1800**
Assistance with public subscriptions	**512–1806**
General online information	**202–512–1530; 1–888–293–6498**
Single copies/back copies:	
Paper or fiche	**512–1800**
Assistance with public single copies	**512–1803**
FEDERAL AGENCIES	
Subscriptions:	
Paper or fiche	**523–5243**
Assistance with Federal agency subscriptions	**523–5243**

Printed on recycled paper.

Contents

Federal Register

Vol. 65, No. 155

Thursday, August 10, 2000

Agriculture Department
See Foreign Agricultural Service
See Forest Service

Alcohol, Tobacco and Firearms Bureau
PROPOSED RULES
Alcohol; viticultural area designations:
River Junction, CA, 48953–48956

Centers for Disease Control and Prevention
NOTICES
Inventions, Government-owned; availability for licensing, 48997–49001
Meetings:
Disease, Disability, and Injury Prevention and Control Special Emphasis Panels, 49001

Children and Families Administration
NOTICES
Grants and cooperative agreements; availability, etc.:
Community Services Office; Job Opportunities for Low-Income Individuals Program, 49155–49191

Commerce Department
See International Trade Administration
See National Institute of Standards and Technology
See National Oceanic and Atmospheric Administration
See Technology Administration
NOTICES
Agency information collection activities:
Submission for OMB review; comment request, 48960

Commodity Futures Trading Commission
NOTICES
Senior Executive Service:
Performance Review Board; membership, 48973

Defense Department
RULES
Civilian health and medical program of uniformed services (CHAMPUS):
TRICARE program—
Retiree Dental Program; expansion of dependent eligibility, 48911–48913
NOTICES
Agency information collection activities:
Proposed collection; comment request, 48973–48974
Submission for OMB review; comment request, 48974
Meetings:
Healthcare Quality Initiative Review Panel, 48974
Submission for OMB review; comment request
Proposed collection; comment request, 48973

Education Department
PROPOSED RULES
Postsecondary education:
Federal Family Education Loan Program and William D. Ford Federal Direct Loan Program, 49123–49132
Higher Education Act; Title IV programs; application, reapplication, and certification processes; streamlining, etc., 49133–49154
NOTICES
Agency information collection activities:
Submission for OMB review; comment request, 48974–48975
Grants and cooperative agreements; availability, etc.:
Postsecondary education—
Business and International Education Program, 48975–48976
Fulbright-Hays Faculty Research Abroad Fellowship Program et al., 48977–48978
Undergraduate International Studies and Foreign Language Program, 48976–48977
Senior Executive Service:
Performance Review Board; membership, 48978–48979

Energy Department
See Federal Energy Regulatory Commission

Environmental Protection Agency
RULES
Air pollution; standards of performance for new stationary sources:
Opacity continuous emission monitoring system equipment, 48914–48929
Superfund program:
National oil and hazardous substances contingency plan—
National priorities list update, 48930
PROPOSED RULES
Water pollution control:
National Pollutant Discharge Elimination System—
Cooling water intake structures for new facilities, 49059–49121
NOTICES
Superfund; response and remedial actions, proposed settlements, etc.:
Genzale Plating Site, NY, 48995–48996

Federal Aviation Administration
RULES
Airworthiness standards:
Special conditions—
General Electric Aircraft Engines models CT7-6E and CT7-8 turboshaft engines, 48887–48888
Class E airspace, 48888–48889
Standard instrument approach procedures, 48893–48894
PROPOSED RULES
Airworthiness directives:
Boeing, 48937–48953
British Aerospace, 48933–48936
DG Flugzeugbau GmbH, 48931–48933
Eurocopter France, 48936–48937
Raytheon, 48945–48947
NOTICES
Agency information collection activities:
Submission for OMB review; comment request, 49053
Airport noise compatibility program:
Port Columbus International Airport, OH, 49053–49054
Passenger facility charges; applications, etc.:
Colorado Springs Airport, CO, 49054–49055

Federal Communications Commission
NOTICES
Agency information collection activities:
Proposed collection; comment request, 48996–48997

Federal Deposit Insurance Corporation
NOTICES
Meetings; Sunshine Act, 48997

Federal Energy Regulatory Commission
NOTICES
Electric rate and corporate regulation filings:
Calpine Corp. et al., 48983–48987
ISO New England, Inc., et al., 48987–48990
Electric utilities (Federal Power Act):
Open access same-time information system (OASIS) and standards of conduct—
OASIS Standards and Communication Protocols Document; changes, 48990–48992
OASIS transactions; business practice standards, 48992–48994
Hydroelectric applications, 48994–48995
Applications, hearings, determinations, etc.:
Columbia Gas Transmission Corp., 48979
Columbia Natural Resources, Inc., 48979–48980
El Paso Natural Gas Co., 48980
Kern River Gas Transmission Co., 48980
Michigan Gas Storage Co., 48980–48981
Northern Natural Gas Co., 48981
Old Dominion Electric Cooperative, 48981
PG&E Gas Transmission, Northwest Corp., 48981–48982
Reliant Energy Gas Transmission Co., 48982
Reliant Energy Power Generation, Inc., et al., 48982
TransColorado Gas Transmission Co., 48982–48983
Trunkline Gas Co., 48983

Federal Highway Administration
NOTICES
Environmental statements; notice of intent:
Williams County et al., ND, 49055

Fish and Wildlife Service
NOTICES
Endangered and threatened species:
Recovery plans—
California red-legged frog, 49005–49006
Endangered and threatened species permit applications, 49004–49005
Environmental statements; availability, etc.:
Boulder County, CO, et al.; Preble's meadow jumping mouse; correction, 49006
Marine mammal permit applications, 49006–49007
Wild Bird Conservation Act of 1992:
Approval applications—
CITES Management Authority of Argentina, 49007
Horton, Lee, 49007–49008

Food and Drug Administration
RULES
Human drugs:
Topical otic products (OTC) for drying water-clogged ears; final monograph amendment, 48902–48905

Foreign Agricultural Service
NOTICES
Tariff-rate quotas:
Raw cane sugar and imported sugars, syrups, and molasses, 48957

Forest Service
NOTICES
Appealable decisions; legal notice:
Eastern Region, 48957–48959
Meetings:
Resource Advisory Councils—
John Day/Snake, 48959–48960

Health and Human Services Department
See Centers for Disease Control and Prevention
See Children and Families Administration
See Food and Drug Administration
See Health Care Financing Administration
RULES
Grants:
Family planning services projects; abortion-related services; compliance standards
Correction, 49057

Health Care Financing Administration
NOTICES
Agency information collection activities:
Submission for OMB review; comment request, 49001–49003

Housing and Urban Development Department
NOTICES
Grants and cooperative agreements; availability, etc.:
Housing, community development, and empowerment programs and Section 8 housing voucher assistance (SuperNOFA)
Non-elderly disabled persons, rental assistance; use of remaining unobligated funds, 49003–49004
Organization, functions, and authority delegations:
Officials in FHA Single Family Homeownership Centers, 49004

Interior Department
See Fish and Wildlife Service
See Land Management Bureau

International Trade Administration
NOTICES
Antidumping:
Cased pencils from—
China, 48960–48961
Dynamic random access memory semiconductors of one megabit or above from-
Korea, 48961–48962
Heavy forged handtools from—
China, 48962–48963
Oil country tubular goods from—
Japan, 48963
Small diameter carbon and alloy seamless standard, line, and pressure pipe from—
Romania, 48963–48965
Stainless steel bar from—
India, 48965–48968
Tapered roller bearings and parts, finished and unfinished, from—
China, 48968–48970
Welded ASTM A-312 stainless steel pipe from—
Korea, 48971

Justice Department
NOTICES
Pollution control; consent judgments:
American Chemical Service, Inc., et al., 49013–49014

American Shizuki Corp. et al., 49014–49015
Lloyd Manufacturing Corp., 49015
Motorola, Inc., et al., 49015
Spokane Metals Co. et al., 49016
USX Corp., 49016–49017
Ware Shoals Power & Water, Inc., et al., 49017
Wolf, Raymond C., et al., 49015–49016

Labor Department
See Mine Safety and Health Administration
See Pension and Welfare Benefits Administration

Land Management Bureau
NOTICES
Alaska Native claims selection:
NANA Regional Corp., Inc., 49008
Closure of public lands:
Colorado, 49008
Nevada, 49008–49010
Meetings:
Resource Advisory Councils—
Northwest Colorado, 49010
Public land orders:
Utah, 49010–49011
Realty actions; sales, leases, etc.:
California, 49011–49012
Withdrawal and reservation of lands:
Alaska, 49012–49013
Oregon, 49010
Oregon; correction, 49013

Library of Congress
RULES
Copyright office and procedures:
General provisions and Privacy Act; technical amendments, 48913–48914

Merit Systems Protection Board
RULES
Nondiscrimination on basis of disability in federally conducted programs or activities:
Headquarters relocation, 48886
Official information availability:
Headquarters relocation, 48885–48886
Open meetings:
Headquarters relocation, 48886
Personnel Management Office rules and regulations; review procedures:
Headquarters relocation, 48885
Practice and procedure:
Headquarters relocation, 48885
Privacy Act; implementation:
Headquarters relocation, 48886

Mine Safety and Health Administration
NOTICES
Safety standard petitions:
Pine Ridge Coal Co. et al., 49017–49018

National Highway Traffic Safety Administration
RULES
Transportation Equity Act for 21st Century; implementation:
State highway safety data and traffic records improvements, 48905–48911

National Institute of Standards and Technology
RULES
Accreditation and assessment programs:
Federal conformity assessment activities; policy guidance, 48894–48902

National Oceanic and Atmospheric Administration
NOTICES
Environmental statements; notice of intent:
National Estuarine Research Reserve System—
Goat Canyon Enhancement Project, CA, 48971–48972

Nuclear Regulatory Commission
NOTICES
Agency information collection activities:
Submission for OMB review; comment request, 49028–49029
Environmental statements; availability, etc.:
Skull Valley Band of Goshute Indians Reservation, UT; independent spent fuel storage installation; meetings, 49029
Meetings:
Nuclear facilities, current decommissioning issues; public workshop, 49029–49030
Meetings; Sunshine Act, 49030

Pension and Welfare Benefits Administration
NOTICES
Employee benefit plans; prohibited transaction exemptions:
Banc Funds Co., LLC, et al., 49018–49028

Public Health Service
See Centers for Disease Control and Prevention
See Food and Drug Administration

Securities and Exchange Commission
NOTICES
Investment Company Act of 1940:
Exemption applications—
CIGNA Funds Group et al., 49033–49035
MPAM Funds Trust, 49035–49036
Wells Fargo Funds Trust et al., 49036–49037
Privacy Act:
Systems of records, 49037–49038
Self-regulatory organizations; proposed rule changes:
Chicago Board Options Exchange, Inc., 49038–49043
New York Stock Exchange, Inc., 49043–49047
Applications, hearings, determinations, etc.:
Public utility holding company filings, 49030–49033

Social Security Administration
NOTICES
Privacy Act:
Systems of records, 49047–49050

State Department
NOTICES
Grants and cooperative agreements; availability, etc.:
Turkey; Bilkent University Student Teacher Internship Program, 49050–49053
Meetings:
Public Diplomacy, U.S. Advisory Commission, 49053

Surface Transportation Board
NOTICES
Rail carriers:
Waybill data; release for use, 49055
Railroad services abandonment:
Union Pacific Railroad Co., 49055–49056

Technology Administration
NOTICES
Senior Executive Service:
Performance Review Board; membership, 48972–48973

Transportation Department
See Federal Aviation Administration
See Federal Highway Administration
See National Highway Traffic Safety Administration
See Surface Transportation Board
NOTICES
Aviation proceedings:
Agreements filed; weekly receipts, 49053

Treasury Department
See Alcohol, Tobacco and Firearms Bureau

Separate Parts In This Issue

Part II
Environmental Protection Agency, 49059–49121

Part III
Department of Education, 49123–49132

Part IV
Department of Education, 49133–49154

Part V
Department of Health and Human Services, Children and Families Administration, 49155–49188

Reader Aids
Consult the Reader Aids section at the end of this issue for phone numbers, online resources, finding aids, reminders, and notice of recently enacted public laws.

CFR PARTS AFFECTED IN THIS ISSUE

A cumulative list of the parts affected this month can be found in the Reader Aids section at the end of this issue.

5 CFR
1201 48885
1203 48885
1204 48885
1205 48886
1206 48886
1207 48886

14 CFR
33 48887
71 (2 documents) 48888
97 (3 documents) 48889, 48891, 48893

Proposed Rules:
39 (9 documents) 48931, 48933, 48936, 48937, 48941, 48943, 48945, 48947, 48950

15 CFR
287 48894

21 CFR
201 48902
310 48902
344 48902

23 CFR
1335 48905

27 CFR

Proposed Rules:
9 48953

32 CFR
199 48911

34 CFR

Proposed Rules:
600 49134
668 49134
675 49134
682 (2 documents) 49124, 49134
685 (2 documents) 49124, 49134
690 49134

37 CFR
201 48913
202 48913
204 48913

40 CFR
60 48914
300 48930

Proposed Rules:
9 49062
122 49062
123 49062
124 49062
125 49062

42 CFR
59 49057

Rules and Regulations

Federal Register

Vol. 65, No. 155

Thursday, August 10, 2000

This section of the FEDERAL REGISTER contains regulatory documents having general applicability and legal effect, most of which are keyed to and codified in the Code of Federal Regulations, which is published under 50 titles pursuant to 44 U.S.C. 1510.

The Code of Federal Regulations is sold by the Superintendent of Documents. Prices of new books are listed in the first FEDERAL REGISTER issue of each week.

MERIT SYSTEMS PROTECTION BOARD

5 CFR Part 1201

Practices and Procedures

AGENCY: Merit Systems Protection Board.

ACTION: Final rule.

SUMMARY: The Merit Systems Protection Board (MSPB or the Board) is amending its rules of practice and procedure in this part to reflect the relocation of its Washington, DC, headquarters. On July 24, 2000, the Board relocated its headquarters offices from 1120 Vermont Avenue, NW., to 1615 M Street, NW. The amendment to this part advises parties to cases submitted to a Special Panel that pleadings must be filed with the Clerk of the Board at the new address.

EFFECTIVE DATE: August 10, 2000.

FOR FURTHER INFORMATION CONTACT: Robert E. Taylor, Clerk of the Board, (202) 653–7200.

The Board is publishing this rule as a final rule pursuant to 5 U.S.C. 1204(h).

List of Subjects in 5 CFR Part 1201

Administrative practice and procedure. Civil rights, Government employees.

Accordingly, the Board amends 5 CFR part 1201 as follows:

PART 1201—PRACTICES AND PROCEDURES

1. The authority citation for part 1201 continues to read as follows:

Authority: 5 U.S.C. 1204 and 7701, unless otherwise noted.

§ 1201.173 [Amended]

2. Amend 5 CFR 1201.173 at paragraph (f)(1)(by removing ''1120 Vermont Avenue, NW.'' and by adding in its place ''1615 M Street, NW.'' and by adding in its place ''1615 M Street, NW.''

Dated: August 4, 2000.

Robert E. Taylor,

Clerk of the Board.

[FR Doc. 00–20220 Filed 8–9–00; 8:45 am]

BILLING CODE 7400–01–M

MERIT SYSTEMS PROTECTION BOARD

5 CFR Part 1203

Procedures for Review of Rules and Regulations of the Office of Personnel Management

AGENCY: Merit Systems Protection Board.

ACTION: Final rule.

SUMMARY: The Merit Systems Protection Board (MSPB or the Board) is amending its rules of practice and procedure in this part to reflect the relocation of its Washington, DC, headquarters. On July 24, 2000, the Board relocated its headquarters offices from 1120 Vermont Avenue, NW, to 1615 M Street, NW. The amendment to this part advises parties to requests for Board review of regulations of the Office of Personnel Management that pleadings must be filed with the Clerk of the Board at the new address.

EFFECTIVE DATE: August 10, 2000.

FOR FURTHER INFORMATION CONTACT: Robert E. Taylor, Clerk of the Board, (202) 653–7200.

The Board is publishing this rule as a final rule pursuant to 5 U.S.C. 1204(h).

List of Subjects in 5 CFR Part 1203

Administrative practice and procedure, Civil rights, Government employees.

Accordingly, the Board amends 5 CFR part 1203 follows:

PART 1203—PROCEDURES FOR REVIEW OF RULES AND REGULATIONS OF THE OFFICE OF PERSONNEL MANAGEMENT

1. The authority citation for part 1203 continues to read as follows:

Authority: 5 U.S.C. 1204(a), 1204(f), and 1204(h).

§ 1203.13 [Amended]

2. Amend 5 CFR 1203.13 at paragraph (a) by removing ''1120 Vermont Avenue, NW.'' and by adding in its place ''1615 M Street, NW.''

Dated: August 4, 2000.

Robert E. Taylor,

Clerk of the Board.

[FR Doc. 00–20219 Filed 8–9–00; 8:45 am]

BILLING CODE 7400–01–M

MERIT SYSTEMS PROTECTION BOARD

5 CFR Part 1204

Availability of Official Information

AGENCY: Merit Systems Protection Board.

ACTION: Final rule.

SUMMARY: The Merit Systems Protection Board (MSPB or the Board) is amending its rules in this part to reflect the relocation of its Washington, DC, headquarters. On July 24, 2000, the Board relocated its headquarters offices from 1120 Vermont Avenue, NW, to 1615 M Street, NW. The amendments to this part advise interested persons that official information is available for public review and copying at the Board's Headquarters Library at the new address, that requests for records located at headquarters must be sent to the Clerk of the Board at the new address, and that appeals of denials of requests for records must be filed with the Chairman at the new address.

EFFECTIVE DATE: August 10, 2000.

FOR FURTHER INFORMATION CONTACT: Robert E. Taylor, Clerk of the Board, (202) 653–7200.

The Board is publishing this rule as a final rule pursuant to 5 U.S.C. 1204(h).

List of Subjects in 5 CFR Part 1204

Confidential business information, Freedom of information, Privacy.

Accordingly, the Board amends 5 CFR part 1204 as follows:

PART 1204—AVAILABILITY OF OFFICIAL INFORMATION

1. The authority citation for part 1204 continues to read as follows:

Authority: 5 U.S.C. 552 and 1204, Pub. L. 99–570, Pub. L. 104–231, and EO 12600.

§ 1204.2 [Amended]

2. Amend 5 CFR 1204.2 at paragraph (d) by removing ''1120 Vermont

Avenue, NW.'' and by adding in its place ''1615 M Street, NW.''

§ 1204.11 [Amended]

3. Amend 5 CFR 1204.11 at paragraph (a) by removing ''1120 Vermont Avenue, NW.'' and by adding in its place ''1615 M Street, NW.''

§ 1204.21 [Amended]

4. Amend 5 CFR 1204.21 at paragraph (b) by removing ''1120 Vermont Avenue, NW.'' and by adding in its place ''1615 M Street, NW.''

Dated: August 4, 2000.

Robert E. Taylor,

Clerk of the Board.

[FR Doc. 00–20218 Filed 8–9–00; 8:45 am]

BILLING CODE 7400–01–M

MERIT SYSTEMS PROTECTION BOARD

5 CFR Part 1205

Privacy Act Regulations

AGENCY: Merit Systems Protection Board.

ACTION: Final rule.

SUMMARY: The Merit Systems Protection Board (MSPB or the Board) is amending its rules in this part to reflect the relocation of its Washington, DC, headquarters. On July 24, 2000, the Board relocated its headquarters offices from 1120 Vermont Avenue, NW., to 1615 M Street, NW. The amendments to this part advise interested persons that requests for access to records located at the Board's headquarters must be sent to the Clerk of the Board at the new address, that requests for amendment of records located at the Board's headquarters must be sent to the Clerk of the Board at the new address, and that appeals of denials of requests for amendment of records must be filed with the Chairman at the new address.

EFFECTIVE DATE: August 10, 2000.

FOR FURTHER INFORMATION CONTACT: Robert E. Taylor, Clerk of the Board, (202) 653–7200.

The Board is publishing this rule as a final rule pursuant to 5 U.S.C. 1204(h).

List of Subjects in 5 CFR Part 1205

Privacy.

Accordingly, the Board amends 5 CFR part 1205 as follows:

PART 1205—PRIVACY ACT REGULATIONS

1. The authority citation for part 1205 continues to read as follows:

Authority: 5 U.S.C. 552a and 1204.

§ 1205.11 [Amended]

2. Amend 5 CFR 1205.11 at paragraph (a) by removing ''1120 Vermont Avenue, NW.'' and by adding in its place ''1615 M Street, NW.''

§ 1205.21 [Amended]

3. Amend 5 CFR 1205.21 in the introductory text by removing ''1120 Vermont Avenue, NW.'' and by adding in its place ''1615 M Street, NW.''

§ 1205.31 [Amended]

4. Amend 5 CFR 1205.31 at paragraph (a) by removing ''1120 Vermont Avenue, NW.'' and by adding in its place ''1615 M Street, NW.''

Dated: August 4, 2000.

Robert E. Taylor,

Clerk of the Board.

[FR Doc. 00–20217 Filed 8–9–00; 8:45 am]

BILLING CODE 7400–01–M

MERIT SYSTEMS PROTECTION BOARD

5 CFR Part 1206

Open Meetings

AGENCY: Merit Systems Protection Board.

ACTION: Final rule.

SUMMARY: The Merit Systems Protection Board (MSPB or the Board) is amending its rules in this part to reflect the relocation of its Washington, DC, headquarters. On July 24, 2000, the Board relocated its headquarters offices from 1120 Vermont Avenue, NW, to 1615 M Street, NW. The amendment to this part advises interested persons that information available to the public under this part will be made available by the Clerk of the Board at the new address.

EFFECTIVE DATE: August 10, 2000.

FOR FURTHER INFORMATION CONTACT: Robert E. Taylor, Clerk of the Board, (202) 653–7200.

The Board is publishing this rule as a final rule pursuant to 5 U.S.C. 1204(h).

List of Subjects in 5 CFR Part 1206

Administrative practice and procedures, Board meetings.

Accordingly, the Board amends 5 CFR part 1206 as follows:

PART 1206—OPEN MEETINGS

1. The authority citation for part 1206 continues to read as follows:

Authority: 5 U.S.C. 552b.

§ 1206.8 [Amended]

2. Amend 5 CFR 1206.8 by removing ''1120 Vermont Avenue, NW.'' and by adding in its place ''1615 M Street, NW.''

Dated: August 4, 2000.

Robert E. Taylor,

Clerk of the Board.

[FR Doc. 00–20216 Filed 8–9–00; 8:45 am]

BILLING CODE 7400–01–M

MERIT SYSTEMS PROTECTION BOARD

5 CFR Part 1207

Enforcement of Nondiscrimination on the Basis of Handicap in Programs or Activities Conducted by the Merit Systems Protection Board

AGENCY: Merit Systems Protection Board

ACTION: Final rule.

SUMMARY: The Merit Systems Protection Board (MSPB or the Board) is amending its rules in this part to reflect the relocation of its Washington, DC, headquarters. On July 24, 2000, the Board relocated its headquarters offices from 1120 Vermont Avenue, NW, to 1615 M Street, NW. The amendment to this part advises interested persons that complaints under this part may be sent to the Board's Equal Employment Office at the new address.

EFFECTIVE DATE: August 10, 2000.

FOR FURTHER INFORMATION CONTACT: Robert E. Taylor, Clerk of the Board (202) 653–7200.

The Board is publishing this rule as a final rule pursuant to 5 U.S.C. 1204(h).

List of Subjects in 5 CFR Part 1207

Administrative practice and procedures, Civil rights.

Accordingly, the Board amends 5 CFR part 1207 as follows:

PART 1207—ENFORCEMENT OF NONDISCRIMINATION ON THE BASIS OF HANDICAP IN PROGRAMS OR ACTIVITIES CONDUCTED BY THE MERIT SYSTEMS PROTECTION BOARD

1. The authority citation for part 1207 continues to read as follows:

Authority: 29 U.S.C. 794.

§ 1207.170 [Amended]

2. Amend 5 CFR 1207.170 at paragraph (c) by removing ''1120 Vermont Avenue, NW., Room 908,'' and by adding in its place ''1615 M Street, NW.''

Dated: August 4, 2000.

Robert E. Taylor,

Clerk of the Board.

[FR Doc. 00–20215 Filed 8–9–00; 8:45 am]

BILLING CODE 7400–01–M

DEPARTMENT OF TRANSPORTATION

Federal Aviation Administration

14 CFR Part 33

[Docket No. NE122; Special Conditions No. 33–003–SC]

Special Conditions: General Electric Aircraft Engines Model CT7–6E and CT7–8 Turboshaft Engines

AGENCY: Federal Aviation Administration (FAA), DOT.

ACTION: Final special conditions; request for comments.

SUMMARY: These special conditions are issued for General Electric Aircraft Engines (GEAE) models CT7–6E and CT7–8 turboshaft engines. These engines will have a novel or unusual rated 30-minute power that makes the issue of these special conditions necessary. The existing airworthiness regulations do not contain adequate or appropriate safety standards for this design feature. These special conditions contain the additional safety standards the Administrator considers to establish a level of safety equivalent to that established by existing airworthiness standards. The rated 30-minute power provides necessary increased rotorcraft hover time to enable operators to better perform critical, life-saving search and rescue missions. For this reason and because a delay would not be in the public interest, the FAA has determined that good cause exists for adopting these special conditions immediately upon publication.

DATES: The effective date of these special conditions is August 10, 2000. Comments must be received on or before September 11, 2000.

ADDRESSES: Comments on these special conditions may be mailed in duplicate to: Federal Aviation Administration, Office of the Regional Counsel, Attention: Docket NE122; 12 New England Executive Park, Burlington, Massachusetts 01803–5299, or delivered in duplicate to the Office of the Regional Counsel at the above address. Comments must be marked: Docket No. NE122. Comments may be inspected in the Docket weekdays, except for Federal holidays, between 8 a.m. and 4:30 p.m.

FOR FURTHER INFORMATION CONTACT: Mr. Chung Hsieh, Engine and Propeller Standards Staff, ANE–110, Engine and Propeller Directorate, Aircraft Certification Service, FAA, New England Region, 12 New England Executive Park, Burlington, Massachusetts 01803–5229; (781) 238–7115; Fax (781) 238–7199. If you have access to the Internet, you may also obtain further information by writing to the following Internet address: ''chung.hsieh@faa.gov''.

SUPPLEMENTARY INFORMATION:

Comments Invited

The FAA has determined that good cause exists for making these special conditions effective upon issuance; however, interested persons are invited to submit such written data, views, or arguments as they may desire. Communications should identify the docket number and special conditions number, and be submitted in duplicate to the address specified above, or, if you have access to the internet, you may make a submission to the following Internet address: ''chung.hsieh@faa.gov''. All communications received on or before the closing date for comments will be considered by the Administrator. These special conditions may be changed in light of the comments received. All comments submitted will be available in the docket for examination by interested persons, both before and after the closing date for comments. A report summarizing each substantive public contact with FAA personnel concerning this rulemaking will be filed in the docket. Persons wishing the FAA to acknowledge receipt of their comments submitted in response to this request must submit with those comments a self-addressed, stamped postcard on which the following statement is made: ''Comments to Docket No. NE122.'' The postcard will be date-stamped and returned to the commenter.

Background

On August 12, 1996, GEAE applied for an amendment to Type Certificate No. E8NE to include new models CT7–6 and CT7–8 turboshaft engines. These models, derivatives of the CT7–6 series turboshaft engine, will include new rated 30-second and 2-minute one-engine-inoperative (OEI) power. On March 10, 2000, GEAE requested an additional rated 30-minute power for models CT7–6E and CT7–8 turboshaft engines. This rating is intended for use after takeoff, for up to 30 minutes at any time between takeoff and landing during any flight when performing search and rescue missions. These engine models will be rated at 30-second OEI, 2-minute OEI, 30-minute OEI, 30-minute, takeoff, and maximum continuous ratings. The existing requirements do not contain a definition for a rated 30-minute power, and do not contain adequate or appropriate safety standards of this new and unusual engine rating.

The rated 30-minute power is the approved brake horsepower developed under static conditions at specified altitudes and temperatures within the operating limitations established under 14 CFR part 33 for periods of use no longer than 30 minutes each. This rating power would provide for rotorcraft hovering operations at a power level greater than maximum continuous power. The certification requirements have been defined around the worst case scenario of unrestricted periods of use up to 30 minutes each in one flight. Therefore, the total accumulated time for endurance testing of 30-minute periods at rated 30-minute power must be 25 hours for certification. However, because the CT7–6E and –8 engine models have a rated 30-minute OEI at higher power and engine limitations than rated 30-minute power, the test run time of 12.5 hours under 33.87(c) may be credited to satisfy one half of the required running time for rated 30-minute power. The additional endurance test runs required for these engine models would therefore be 25 periods of test at rated 30-minute power for 30 minutes each.

Type Certification Basis

Under 14 CFR 21.101, GEAE must show that the models CT7–6E and CT7–8 turboshaft engines meet the requirements of the applicable regulations in effect on the date of the application, or the applicable provisions of the regulations incorporated by reference in Type Certificate No. E8NE. The regulations incorporated by reference in the type certificate are commonly referred to as the ''original type certification basis''. Since models CT7–6E and CT7–8 engines are derivatives of the model CT7–6 series turboshaft engine, the regulations incorporated by reference of the engine in Type Certificate No. E8NE are part 33, effective February 1, 1965, as amended by Amendments 33–1 through 33–5; § 33.87, Amendment 12; and Special Conditions Number 33–76–NE–2, Docket No. 16921 (issued October 31, 1978). However, GEAE has elected to demonstrate compliance of later amendments of part 33 for the engines. The certification basis for models CT7–6E and CT7–8 turboshaft engines will be part 33, effective February 1, 1965, as amended by Amendments 33–1 through 33–19; and Special Conditions No. 33–002–SC, Docket No. NE121, published on May 28, 1999 (64 FR 28900).

The Administrator finds that the applicable airworthiness regulations in part 33, as amended, do not contain adequate or appropriate safety standards for the new rated 30-minute power for engine models CT7–6E and CT7–8

turboshaft engines. Because it is a novel or unusual engine rating feature, special conditions are prescribed under the provisions of 14 CFR 21.16.

Special conditions, as appropriate, are issued in accordance with 14 CFR 11.49 after public notice, as required by §§ 11.28 and 11.29(b), and became part of the type certification basis in accordance with 14 CFR 21.101(b)(2).

Novel or Unusual Design Features

The GEAE engine models CT7–6E and CT7–8 turboshaft engines will incorporate the following novel or unusual design feature: Rated 30-minute power. The power available for rotocrafts hovering to perform search and rescue missions is limited to the maximum continuous rating power under the current part 33 requirements. The proposed rated 30-minute power would provide a higher power level than currently available for use up to 30 minutes at any time between takeoff and landing during any flight. This new rating will enhance rotorcraft safety through the availability of increased power for hovering operations calling for greater than maximum continuous power.

Applicability

As discussed above, these special conditions are applicable to the GEAE models CT7–6E and CT7–8 turboshaft engines. Should GEAE apply at a later date for a change to the type certificate to include another model incorporating the same novel or unusual design feature, the special conditions would apply to that model as well under the provisions of 14 CFR 21.101(a)(1).

Conclusion

This action affects only certain novel or unusual design features on GEAE models CT7–6E and CT7–8 turboshaft engines. It is not a rule of general applicability, and it affects only the applicant who applied to the FAA for approval of these features on the engines.

List of Subjects in 14 CFR Part 33

Air transportation, Aircraft, Aviation safety, Safety.

The authority citations for these special conditions is as follows:

Authority: 49 U.S.C. 106(g), 40113, 44701–44702, 44704.

The Special Conditions

Accordingly, the Federal Aviation Administration (FAA) proposes the following special conditions as part of the type certification basis for the GEAE models CT7–6E and CT7–8 turboshaft engines:

§ 33.4 Instructions for Continued Airworthiness (ICA).

(a) In addition to the requirements of § 33.4, the Instructions for Continued Airworthiness (ICA) procedures must:

(1) Ensure that the engine deterioration in service will not exceed the level shown in certification using the rated 30-minute power.

(2) Be included in the airworthiness limitations section of the ICA.

§ 33.7 Engine Ratings and Operating Limitations.

(b) In addition to the ratings provided in § 33.7, a rated 30-minute power is available, which shall be defined as the approved brake horsepower developed under static conditions at specified altitudes and temperatures within the operating limitations established under part 33 of this chapter, and limited in use to periods of not over 30 minutes each.

§ 33.87 Endurance Test.

(c) The test requirements of § 33.87(a), (c), and (f), except that the first 35 minutes of the two hour test required by paragraph (c)(3) must be run at rated maximum continuous power for 5 minutes and then at rated 30-minute power for 30 minutes, in each of the 25 six-hour endurance test sequences.

Issued in Burlington, Massachusetts on August 2, 2000.

David A. Downey,

Assistant Manager, Engine and Propeller Directorate, Aircraft Certification Service.

[FR Doc. 00–20272 Filed 8–9–00; 8:45 am]

BILLING CODE 4910–13–M

DEPARTMENT OF TRANSPORTATION

Federal Aviation Administration

14 CFR Part 71

[Airspace Docket No. 00–ANM–01]

Revision of Class E airspace, Englewood, CO

AGENCY: Federal Aviation Administration (FAA), DOT.

ACTION: Final rule; correction.

SUMMARY: This action corrects a final rule published on May 25, 2000 that inadvertently described the Class E airspace extension as E5. Additionally, in the legal description text, the word ''radius'' was inappropriately applied. This action corrects the final rule by reflecting the proper airspace designation and correction of text in the legal description.

EFFECTIVE DATE: 0901 UTC, August 10, 2000.

FOR FURTHER INFORMATION CONTACT: Brian Durham, ANM–520.7, Federal Aviation Administration, Docket No. 00–ANM–01, 1601 Lind Avenue S.W., Renton, Washington, 98055–4056; telephone number: (425) 227–2527.

SUPPLEMENTARY INFORMATION: On May 25, 2000, the FAA published a final rule that established a Class E airspace extension at the Centennial Airport, Englewood, CO (65 FR 33750). However, that action erroneously described the airspace as E5 instead of E4. Also, in the legal description text, the word ''radius'' was inappropriately applied. This action corrects the final rule by reflecting the proper airspace designation and description.

Correction to Final Rule

Accordingly, pursuant to the authority delegated to me, the Class E airspace description at Englewood, CO, as published in the **Federal Register** on May 25, 2000, (65 FR 33750), (Federal Register Document No. 00–13174) is corrected as follows:

§ 71.1 [Corrected]

1. On page 33751, in column 2, in the airspace description, header, correct the airspace description by removing E5 and adding E4. In the text, line 2, remove the word ''radius''.

Issued in Seattle, Washington, on July 27, 2000.

Daniel A. Boyle,

Acting Manager, Air Traffic Division, Northwest Mountain Region.

[FR Doc. 00–20274 Filed 8–9–00; 8:45 am]

BILLING CODE 4910–13–M

DEPARTMENT OF TRANSPORTATION

Federal Aviation Administration

14 CFR Part 71

[Airspace Docket No. 00–ANM–07]

Modification of Class E airspace, Wenatchee, WA

AGENCY: Federal Aviation Administration (FAA), DOT.

ACTION: Final rule.

SUMMARY: This action modifies the Wenatchee, WA, Class E airspace to remove the Fancher field airspace exclusion at the Panghorn Memorial Airport, Wenatchee, WA.

EFFECTIVE DATE: 0901 UTC, October 05, 2000.

FOR FURTHER INFORMATION CONTACT: Brian Durham, ANM–520.7, Federal Aviation Administration, Docket No. 00–ANM–07, 1601 Lind Avenue SW,

Renton, Washington 98055–4056: telephone number: (425) 227–2527.

SUPPLEMENTARY INFORMATION:

History

On May 25, 2000, the FAA proposed to amend Title 14, Code of Federal Regulations, part 71 (14 CFR part 71) by modifying Class E airspace at Wenatchee, WA, to remove the Fancher Field airspace exclusion in the legal description for the Panghorn Memorial Airport, Wenatchee, WA (65 FR 33796). Fancher Field has been abandoned negating the requirement for its Class E2 airspace exclusion. This airspace modification would delete the airspace requirement for Fancher Field and correct the legal description for Wenatchee, WA. Interested parties were invited to participate in the rulemaking proceeding by submitting written comments on the proposal. No comments were received.

The Rule

This amendment to Title 14 Code of Federal Regulations, part 71 (14 CFR part 71) modifies Class E airspace at Wenatchee, WA, by removing the Fancher Field airspace exclusion in the legal description for the Panghorn Memorial Airport, Wenatchee, WA. Fancher Field has been abandoned negating the requirement for its Class E2 airspace exclusion. This airspace modification deletes the airspace requirement for Fancher Field and corrects the legal description for Wenatchee, WA. The FAA establishes Class E airspace where necessary to contain aircraft transitioning between the terminal and en route environments. This rule is designed to provide for the safe and efficient use of the navigable airspace and promote safe flight operations at the Wenatchee Airport.

The area will be depicted on aeronautical charts for pilot reference. The coordinates for this airspace docket are based on North American Datum 83. Class E airspace areas designated as surface areas, are published in Paragraph 6002, of FAA Order 7400.9G dated September 1, 1999, and effective September 16, 1999, which is incorporated by reference in 14 CFR 71.1. The Class E airspace designation listed in this document would be published subsequently in the Order.

The FAA has determined that this regulation only involves an established body of technical regulations for which frequent and routine amendments are necessary to keep them operationally current. It, therefore, (1) is not a ''significant regulatory action'' under Executive Order 12866; (2) is not a ''significant rule'' under DOT Regulatory Policies and Procedures (44 FR 11034; February 26, 1979); and (3) does not warrant preparation of a Regulatory Evaluation as the anticipated impact is so minimal. Since this is a routine matter that will only affect air traffic procedures and air navigation, it is certified that this rule, when promulgated, will not have a significant economic impact on a substantial number of small entities under the criteria of the Regulatory Flexibility Act.

List of Subjects in 14 CFR Part 71

Airspace, Incorporation by reference, Navigation (air).

Adoption of the Amendment

In consideration of the foregoing, the Federal Aviation Administration proposes to amend 14 CFR part 71 as follows:

PART 71—DESIGNATION OF CLASS A, CLASS B, CLASS C, CLASS D, AND CLASS E AIRSPACE AREAS; AIRWAYS; ROUTES; AND REPORTING POINTS

1. The authority citation for 14 CFR part 71 continues to read as follows:

Authority: 49 U.S.C. 106(g), 40103, 40113, 40120; E.O. 10854, 24 FR 9565, 3 CFR, 1959–1963 Comp., p. 389.

§ 71.1 [Amended]

2. The incorporation by reference in 14 CFR 71.1 of the Federal Aviation Administration Order 7400.9G, Airspace Designations and Reporting Points, dated September 1, 1999, and effective September 16, 1999, is amended as follows:

Paragraph 6002 Class E Airspace Designated as Surface Areas.

* * * * *

ANM WA E2 Wenatchee, WA

Wenatchee, Panghorn Memorial Airport, WA

(Lat. 47°23′55″ N, long. 120°12′24″ W)

Within a 4 mile radius of Panghorn Memorial Airport, and within 2.7 miles each side of the Wenatchee VOR/DME 124° radial extending from the 4-mile radius to 7 miles southeast of the VOR/DME.

* * * * *

Issued in Seattle, Washington, on July 27, 2000.

Daniel A. Boyle,

Acting Manager, Air Traffic Division, Northwest Mountain Region.

[FR Doc. 00–20273 Filed 8–9–00; 8:45 am]

BILLING CODE 4910–13–M

DEPARTMENT OF TRANSPORTATION

Federal Aviation Administration

14 CFR Part 97

[Docket No. 30150; Amdt. No. 2005]

Standard Instrument Approach Procedures; Miscellaneous Amendments

AGENCY: Federal Aviation Administration (FAA), DOT.

ACTION: Final rule.

SUMMARY: This amendment establishes, amends, suspends, or revokes Standard Instrument Approach Procedures (SIAP's) for operations at certain airports. These regulatory actions are needed because of the adoption of new or revised criteria, or because of changes occurring in the National Airspace System, such as the commissioning of new navigational facilities, addition of new obstacles, or changes in air traffic requirements. These changes are designed to provide safe and efficient use of the navigable airspace and to promote safe flight operations under instrument flight rules at the affected airports.

DATES: An effective date for each SIAP is specified in the amendatory provisions.

Incorporation by reference-approved by the Director of the Federal Register on December 31, 1980, and reapproved as of January 1, 1982.

ADDRESSES: Availability of matters incorporated by reference in the amendment is as follows:

For Examination—

1. FAA Rules Docket, FAA Headquarters Building, 800 Independence Avenue, SW., Washington, DC 20591;

2. The FAA Regional Office of the region in which the affected airport is located; or

3. The Flight Inspection Area Office which originated the SIAP.

For Purchase—Individual SIAP copies may be obtained from:

1. FAA Public Inquiry Center (APA–200), FAA Headquarters Building, 800 Independence Avenue, SW., Washington, DC 20591; or

2. The FAA Regional Office of the region in which the affected airport is located.

By Subscription—Copies of all SIAP's, mailed once every 2 weeks, are for sale by the Superintendent of Documents, U.S. Government Printing Office, Washington, DC 20402.

FOR FURTHER INFORMATION CONTACT: Donald P. Pate, Flight Procedure

Standards Branch (AMCAFS–420), Flight Technologies and Programs Division, Flight Standards Service, Federal Aviation Administration, Mike Monroney Aeronautical Center, 6500 South MacArthur Blvd., Oklahoma City, OK. 73169 (Mail Address: P.O. Box 25082 Oklahoma City, OK. 73125) telephone: (405) 954–4164.

SUPPLEMENTARY INFORMATION: This amendment to part 97 of the Federal Aviation Regulations (14 CFR part 97) establishes, amends, suspends, or revokes SIAP's. The complete regulatory description of each SIAP is contained in official FAA form documents which are incorporated by reference in this amendment under 5 U.S.C. 552(a), 1 CFR part 51, and § 14 CFR 97.20 of the Federal Aviation Regulations (FAR). The applicable FAA Forms are identified as FAA Form 8260–5. Materials incorporated by reference are available for examination or purchase as stated above.

The large number of SIAP's, their complex nature, and the need for a special format make their verbatim publication in the **Federal Register** expensive and impractical. Further, airmen do not use the regulatory text of the SIAPs, but refer to their graphic depiction on charts printed by publishers of aeronautical materials. Thus, the advantages of incorporation by reference are realized and publication of the complete description of each SIAP contained in FAA form documents is unnecessary. The provisions of this amendment state the affected CFR sections, with the types and effective dates of the SIAPs. This amendment also identifies the airport, its location, the procedure identification and the amendment number.

The Rule

This amendment to part 97 is effective upon publication of each separate SIAP as contained in the transmittal. The SIAP's contained in this amendment are based on the criteria contained in the United States Standard for Terminal Instrument Procedures (TERPS). In developing these SIAPs, the TERPS criteria were applied to the conditions existing or anticipated at the affected airports.

The FAA has determined through testing that current non-localizer type, non-precision instrument approaches developed using the TERPS criteria can be flown by aircraft equipped with a Global Positioning System (GPS) and or Flight Management System (FMS) equipment. In consideration of the above, the applicable SIAP's will be altered to include ''or GPS or FMS'' in the title without otherwise reviewing or modifying the procedure. (Once a stand alone GPS or FMS procedure is developed, the procedure title will be altered to remove ''or GPS or FMS'' from these non-localizer, non-precision instrument approach procedure titles.)

The FAA has determined through extensive analysis that current SIAP's intended for use by Area Navigation (RNAV) equipped aircraft can be flown by aircraft utilizing various other types of navigational equipment. In consideration of the above, those SIAP's currently designated as ''RNAV'' will be redesignated as ''VOR/DME RNAV'' without otherwise reviewing or modifying the SIAP's.

Because of the close and immediate relationship between these SIAP's and safety in air commerce, I find that notice and public procedure before adopting these SIAP's are, impracticable and contrary to the public interest and, where applicable, that good cause exists for making some SIAPs effective in less than 30 days.

Conclusion

The FAA has determined that this regulation only involves an established body of technical regulations for which frequent and routine amendments are necessary to keep them operationally current. It, therefore—(1) is not a ''significant regulatory action'' under Executive Order 12866; (2) is not a ''significant rule'' under DOT Regulatory Policies and Procedures (44 FR 11034; February 26, 1979); and (3) does not warrant preparation of a regulatory evaluation as the anticipated impact is so minimal. For the same reason, the FAA certifies that this amendment will not have a significant economic impact on a substantial number of small entities under the criteria of the Regulatory Flexibility Act.

List of Subjects in 14 CFR Part 97

Air Traffic Control, Airports, Navigation (Air).

Issued in Washington, DC on August 4, 2000.

L. Nicholas Lacey,

Director, Flight Standards Service.

Adoption of the Amendment

Accordingly, pursuant to the authority delegated to me, part 97 of the Federal Aviation Regulations (14 CFR part 97) is amended as follows:

PART 97—STANDARD INSTRUMENT APPROACH PROCEDURES

1. The authority citation for part 97 continues to read:

Authority: 49 U.S.C. 106(g), 40103, 40106, 40113–40114, 40120, 44502, 44514, 44701, 44719, 44721–44722.

§§ 97.23, 97.27, 97.33 and 97.35 [Amended]

2. Amend 97.23, 97.27, 97.33 and 97.35, as appropriate, by adding, revising, or removing the following SIAP's, effective at 0901 UTC on the dates specified:

** * * Effective October 5, 2000*

Mena, AR, Mena Intermountain Muni, NDB or GPS–B, Amdt 7, CANCELLED
Mena, AR, Mena Intermountain Muni, NDB–B, Amdt 7
Griffen, GA, Griffen Spalding County, VOR/DME or GPS RWY 14, Amdt 4B, CANCELLED
Griffen, GA, Griffen Spalding County, VOR/DME RWY 14, Amdt 4B
Ames, IA, Ames Muni, NDB or GPS RWY 1, Amdt 1, CANCELLED
Ames, IA, Ames Muni, NDB RWY 1, Amdt 1
Hampton, IA, Hampton Muni, NDB or GPS RWY 17, Amdt 4, CANCELLED
Hampton, IA, Hampton Muni, NDB RWY 17, Amdt 4
Hampton, IA, Hampton Muni, VOR/DME or GPS RWY 35, Amdt 1, CANCELLED
Hampton, IA, Hampton Muni, VOR/DME RWY 35, Amdt 1
Hays, KS, Hays Regional, NDB or GPS RWY 34, Amdt 2B, CANCELLED
Hays, KS, Hays Regional, NDB RWY 34, Amdt 2B
Tallulah/Vicksburg, LA, Vicksburg Tallulah Regional, NDB or GPS RWY 36, Orig-C, CANCELLED
Tallulah/Vicksburg, LA, Vicksburg Tallulah Regional, NDB RWY 36, Orig-C
Saginaw, MI, Saginaw County H.W. Browne, NDB or GPS RWY 27, Orig-A, CANCELLED
Saginaw, MI, Saginaw County H.W. Browne, NDB RWY 27, Orig-A
Three Rivers, MI, Three Rivers Muni Dr. Haines, NDB or GPS RWY 27, Amdt 7A, CANCELLED
Three Rivers, MI, Three Rivers Muni Dr. Haines, NDB RWY 27, Amdt 7A
Minneapolis, MN, Flying Cloud, VOR or GPS RWY 36, Amdt 12, CANCELLED
Minneapolis, MN, Flying Cloud, VOR RWY 36, Amdt 12
Owatonna, MN, Owatonna Degner Regional, VOR or GPS RWY 12, Amdt 10, CANCELLED
Owatonna, MN, Owatonna Degner Regional, VOR RWY 12, Amdt 10
Lebanon, NH, Lebanon Muni, VOR/DME or GPS RWY 7, Orig-A, CANCELLED
Lebanon, NH, Lebanon Muni, VOR/DME or GPS RWY 7, Orig-A
Lebanon, NH, Lebanon Muni, VOR or GPS RWY 25 Orig-B, CANCELLED
Lebanon, NH, Lebanon Muni, VOR RWY 25, Orig-B
Whitefield, NH, Mount Washington Regional, NDB or GPS RWY 10, Amdt 7, CANCELLED
Whitefield, NH, Mount Washington Regional, NDB RWY 10, Amdt 7
Monticello, NY, Sullivan County Intl, VOR/DME or GPS RWY 33, Amdt 3, CANCELLED

Monticello, NY, Sullivan County Intl, VOR/DME RWY 33, Amdt 3
Watertown, NY, Watertown Intl, VOR or GPS RWY 7, Amdt 13A, CANCELLED
Watertown, NY, Watertown Intl, VOR RWY 7, Amdt 13A
Enid, OK, Enid Woodring Muni, VOR or GPS RWY 35, Amdt 13, CANCELLED
Enid, OK, Enid Woodring Muni, VOR RWY 35, Amdt 13
McAlester, OK, McAlester Regional, NDB or GPS RWY 1, Amdt 2, CANCELLED
McAlester, OK, McAlester Regional, NDB RWY 1, Amdt 2
Miami, OK, Miami Muni, VOR/DME or GPS–A, Amdt 1, CANCELLED
Miami, OK, Miami Muni, VOR/DME–A, Amdt 1
McMinnville, TN, Warren County Memorial, NDB or GPS RWY 23, Amdt 1, CANCELLED
McMinnville, TN, Warren County Memorial, NDB RWY 23, Amdt 1
Baytown, TX, RWJ Airpark, VOR/DME RNAV or GPS RWY 26, Amdt 1, CANCELLED
Baytown, TX, RWJ Airpark, VOR/DME RNAV RWY 26, Amdt 1
Brownwood, TX, Brownwood Regional, VOR or GPS RWY 17, Amdt 11A, CANCELLED
Brownwood, TX, Brownwood Regional, VOR RWY 17, Amdt 11A
Brownwood, TX, Brownwood Regional, VOR/DME or GPS RWY 35, Amdt 1B, CANCELLED
Brownwood, TX, Brownwood Regional, VOR/DME RWY 35, Amdt 1B
Norfolk, VA, Norfolk Intl, NDB/DME or GPS RWY 23, ORIG–B, CANCELLED
Norfolk, VA, Norfolk Intl, NDB/DME RWY 23, ORIG–B
Black River Falls, WI, Black River Area, NDB or GPS RWY 8, Amdt 5, CANCELLED
Black River Falls, WI, Black River Area, NDB RWY 8, Amdt 5

[FR Doc. 00–20277 Filed 8–9–00; 8:45 am]

BILLING CODE 4910–13–M

DEPARTMENT OF TRANSPORTATION

Federal Aviation Administration

14 CFR Part 97

[Docket No. 30149; Amdt. No. 2004]

Standard Instrument Approach Procedures; Miscellaneous Amendments

AGENCY: Federal Aviation Administration (FAA), DOT.

ACTION: Final rule.

SUMMARY: This amendment establishes, amends, suspends, or revokes Standard Instrument Approach Procedures (SIAPs) for operations at certain airports. These regulatory actions are needed because of changes occurring in the National Airspace System, such as the commissioning of new navigational facilities, addition of new obstacles, or changes in air traffic requirements. These changes are designed to provide safe and efficient use of the navigable airspace and to promote safe flight operations under instrument flight rules at the affected airports.

DATES: An effective date for each SIAP is specified in the amendatory provisions.

Incorporation by reference-approved by the Director of the Federal Register on December 31, 1980, and reapproved as of January 1, 1982.

ADDRESSES: Availability of matter incorporated by reference in the amendment is a follows:

For Examination—

1. FAA Rules Docket, FAA Headquarters Building, 800 Independence Avenue, SW., Washington, DC 20591;

2. The FAA Regional Office of the region in which affected airport is located; or

3. The Flight Inspection Area Office which originated the SIAP.

For Purchase—Individual SIAP copies may be obtained from:

1. FAA Public Inquiry Center (APA–200), FAA Headquarters Building, 800 Independence Avenue, SW, Washington, DC 20591; or

2. The FAA Regional Office of the region in which the affected airport is located.

By Subscription—Copies of all SIAPs, mailed once every 2 weeks, are for sale by the Superintendent of Documents, U.S. Government Printing Office, Washington, DC 20402.

FOR FURTHER INFORMATION CONTACT: Donald P. Pate, Flight Procedure Standards Branch (AMCAFS–420), Flight Technologies and Programs Division, Flight Standards Service, Federal Aviation Administration, Mike Monroney Aeronautical Center, 6500 South MacArthur Blvd., Oklahoma City, OK 73169 (Mail Address: P.O. Box 25082 Oklahoma City, OK 73125) telephone: (405) 954–4164.

SUPPLEMENTARY INFORMATION: This amendment to part 97 of the Federal Aviation Regulations (14 CFR part 97) establishes, amends, suspends, or revokes Standard Instrument Approach Procedures (SIAPs). The complete regulatory description on each SIAP is contained in the appropriate FAA Form 8260 and the National Flight Data Center (FDC)/Permanent (P) Notices to Airmen (NOTAM) which are incorporated by reference in the amendment under 5 U.S.C. 552(a), 1 CFR part 51, and § 97.20 of the Federal Aviation's Regulations (FAR). Materials incorporated by reference are available for examination or purchase as stated above.

The large number of SIAPs, their complex nature, and the need for a special format make their verbatim publication in the **Federal Register** expensive and impractical. Further, airmen do not use the regulatory text of the SIAPs, but refer to their graphic depiction of charts printed by publishers of aeronautical materials. Thus, the advantages of incorporation by reference are realized and publication of the complete description of each SIAP contained in FAA form documents is unnecessary. The provisions of this amendment state the affected CFR (and FAR) sections, with the types and effective dates of the SIAPs. This amendment also identifies the airport, its location, the procedure identification and the amendment number.

The Rule

This amendment to part 97 of the Federal Aviation Regulations (14 CFR part 97) establishes, amends, suspends, or revokes SIAPs. For safety and timeliness of change considerations, this amendment incorporates only specific changes contained in the content of the following FDC/P NOTAMs for each SIAP. The SIAP information in some previously designated FDC/Temporary (FDC/T) NOTAMs is of such duration as to be permanent. With conversion to FDC/P NOTAMs, the respective FDC/T NOTAMs have been canceled.

The FDC/P NOTAMs for the SIAPs contained in this amendment are based on the criteria contained in the U.S. Standard for Terminal Instrument Procedures (TERPS). In developing these chart changes to SIAPs by FDC/P NOTAMs, the TERPS criteria were applied to only these specific conditions existing at the affected airports. All SIAP amendments in this rule have been previously issued by the FAA in a National Flight Data Center (FDC) Notice to Airmen (NOTAM) as an emergency action of immediate flight safety relating directly to published aeronautical charts. The circumstances which created the need for all these SIAP amendments requires making them effective in less than 30 days.

Further, the SIAPs contained in this amendment are based on the criteria contained in the TERPS. Because of the close and immediate relationship between these SIAPs and safety in air commerce, I find that notice and public procedure before adopting these SIAPs are impracticable and contrary to the public interest and, where applicable, that good cause exists for making these SIAPs effective in less than 30 days.

Conclusion

The FAA has determined that this regulation only involves an established body of technical regulations for which frequent and routine amendments are necessary to keep them operationally current. It, therefore—(1) is not a ''significant regulatory action'' under Executive Order 12866; (2) is not a ''significant rule'' under DOT Regulatory Policies and Procedures (44 FR 11034; February 26, 1979); and (3) does not warrant preparation of a regulatory evaluation as the anticipated impact is so minimal. For the same reason, the FAA certifies that this amendment will not have a significant economic impact on a substantial number of small entities under the criteria of the Regulatory Flexibility act.

List of Subjects in 14 CFR Part 97

Air Traffic Control, Airports, Navigation (Air).

Issued in Washington, DC on August 4, 2000.

L. Nicholas Lacey,

Director, Flight Standards Service.

Adoption of the Amendment

Accordingly, pursuant to the authority delegated to me, part 97 of the Federal Aviation Regulations (14 CFR part 97) is amended by establishing, amending, suspending, or revoking Standard Instrument Approach Procedures, effective at 0901 UTC on the dates specified, as follows:

PART 97—STANDARD INSTRUMENT APPROACH PROCEDURES

1. The authority citation for part 97 is revised to read as follows:

Authority: 49 U.S.C. 40103, 40113, 40120, 44701; 49 U.S.C. 106(g); and 14 CFR 11.49(b)(2).

2. Part 97 is amended to read as follows:

§§ 97.23, 97.25, 97.27, 97.29, 97.31, 97.33 and 97.35 [Amended]

By amending: § 97.23 VOR, VOR/DME, VOR or TACAN, and VOR/DME or TACAN; § 97.25 LOC, LOC/DME, LDA, LDA/DME, SDF, SDF/DME; § 97.27 NDB, NDB/DME; § 97.29 ILS, ILS/DME, ISMLS, MLS, MLS/DME, MLS/RNAV; § 97.31 RADAR SIAPs; § 97.22 RNAV SIAPs; and § 97.35 COPTER SIAPs, identified as follows:

** * *Effective Upon Publication*

FDC date	State	City	Airport	FDC N.	SIAP
07/02/00	LA	Oakdale	Allen Parish	FDC 0/8721	NDB Rwy 35, orig...
07/20/00	CA	Los Angeles	Los Angeles Intl	FDC 0/7997	VOR or TACAN or GPS RWY 7L/R Amdt 18...
07/20/00	IL	Chicago/Prospect Hgts/ Wheeling.	Palwaukee Muni	FDC 0/8029	VOR Rwy 16, Orig...
07/20/00	ME	Bangor	Bangor Intl	FDC 0/7996	NDB Rwy 33 Amdt 5B...
07/20/00	NC	Salisbury	Rowan County	FDC 0/8004	ILS Rwy 20, Orig–A...
07/20/00	VA	Richmond/Ashland	Hanover County Muni	FDC 0/8027	VOR RWY, 16 ORIG–C This replaces 0/7970 Intl 00–17...
07/21/00	LA	Lake Charles	Lake Charles Regional	FDC 0/8078	ILS Rwy 15, Amdt 19A...
07/21/00	LA	Lake Charles	Lake Charles Regional	FDC 0/8079	Radar–1, Amdt 4...
07/21/00	WI	Madison	Dane County Regional—Trual Field	FDC 0/8083	ILS Rwy 36, Amdt 29C...
07/24/00	TX	Tyler	Tyler Pounds Field	FDC 0/8229	GPS Rwy 31, Orig–A...
07/24/00	TX	Tyler	Tyler Pounds Field	FDC 0/8230	VOR/DME or GPS Rwy 4, Amdt 3A...
07/24/00	TX	Tyler	Tyler Pounds Field	FDC 0/8231	NDB or GPS Rwy 13, Amdt 17B...
07/24/00	TX	Tyler	Tyler Pounds Field	FDC 0/8232	VOR/DME or GPS Rwy 22, Amdt 3A...
07/24/00	TX	Tyler	Tyler Pounds Field	FDC 0/8234	VOR Rwy 31, Amdt 1A...
07/25/00	OK	El Reno	El Reno Muni Air Park	FDC 0/8285	NDR Rwy 35, Amdt 3A...
07/25/00	OK	Oklahoma City	Sundance Airpark	FDC 0/8288	VOR Rwy 17, Orig...
07/25/00	OK	Oklahoma City	Sundance Airpark	FDC 0/8289	LOC Rwy 17, Orig...
07/25/00	OK	Oklahoma City	Will Rogers World	FDC 0/8286	NDB Rwy 17R, Amdt 24...
07/25/00	OK	Oklahoma City	Will Rogers World	FDC 0/8287	ILS Rwy 17R, Amdt 9B...
07/26/00	LA	New Roads	False River Airpark	FDC 0/8362	NDB or GPS Rwy 36, Amdt 1...
07/26/00	LA	New Roads	False River Airpark	FDC 0/8363	VOR/DME or GPS–A, Amdt 3...
07/26/00	LA	New roads	False River Airpark	FDC 0/8364	LOC Rwy 36, Orig–A...
07/26/00	NC	Burlington	Burlington—Alamance Regional	FDC 0/8348	GPS Rwy 24 Amdt 1...
07/26/00	NC	Burlington	Burlington—Alamance Regional	FDC 0/8349	GPS Rwy 6 Amdt 1...
07/26/00	NC	Burlington	Burlington—Alamance Regional	FDC 0/8350	LOC Rwy 6 Amdt 2...
07/26/00	OK	Norman	University of Oklahoma Westheimer	FDC 0/8292	LOC Rwy 3, Amdt 3A...
07/26/00	SC	North Myrtle Beach	North Myrtle Beach/Grand Strad	FDC 0/8365	VOR Rwy 23 Amdt 19B...
07/26/00	VA	Richmond/Ashland	Hanover County Muni	FDC 0/8276	GPS Rwy 16, Amdt 1...
07/27/00	AR	Walnut Ridge	Walnut Ridge Regional	FDC 0/8446	GPS Rwy 35, Orig...
07/27/00	AR	Walnut Ridge	Walnut Ridge Regional	FDC 0/8447	GPS Rwy 17, Orig...
07/27/00	AR	Walnut Ridge	Walnut Ridge Regional	FDC 0/8464	LOC Rwy 17, Amdt 2C...
07/27/00	AR	Walnut Ridge	Walnut Ridge Regional	FDC 0/8465	NDB Rwy 17, Amdt 3B...
07/27/00	AZ	Casa Grande	Casa Grande Muni	FDC 0/8448	ILS/DME Rwy 5 Amdt 6A...
07/28/00	DC	Washington	Washington Dulles Intl	FDC 0/8531	VOR/DME OR TACAN Rwy 12 Amdt 8...
07/28/00	DC	Washington	Washington Dulles Intl	FDC 0/8532	ILS Rwy 12 Amdt 6B...
07/28/00	GA	Covington	Covington Muni	FDC 0/8500	NDB Rwy 28 Amdt 1...
07/28/00	GA	Covington	Covington Muni	FDC 0/8501	GPS Rwy 28 Orig...
07/28/00	GA	Covington	Covington Muni	FDC 0/8502	VOR/DME or GPS Rwy 10 Amdt 3...
07/28/00	OH	Cincinnati	Cincinnati Muni Airport—Lunken Field.	FDC 0/8518	LOC BC Rwy 3R, Amdt 8A...

FDC date	State	City	Airport	FDC N.	SIAP
07/31/00	CT	Hartford	Hartford-Brainard	FDC 0/8659	LDA Rwy 2 Amdt 1C...
07/31/00	LA	Shreveport	Shreveport Regional	FDC 0/8620	ILS RWY 14, AMDT 23A...
07/31/00	LA	Shreveport	Shreveport Regional	FDC 0/8621	Radar–1, Amdt 3...
07/31/00	LA	Shreveport	Shreveport Regional	FDC 0/8641	LOC Rwy 5, Amdt 1...
07/31/20	WA	Everett	Snohomish County (Paine Field)	FDC 0/8614	ILS Rwy 16R, Amdt 18B...
08/01/00	CT	Windsor Locks	Bradley Intl	FDC 0/8696	VOR or Tacan Rwy 24 Orig This replaces 0/7901 Intl 00–17...
08/01/00	MO	Rolla/Vichy	Rolla National	FDC 0/8709	VOR/DME RNAV or GPS Rwy 22, Amdt 2B...
08/01/00	MO	Rolla/Vichy	Rolla National	FDC 0/8724	VOR/DME Rwy 4, Amdt 2B...
08/01/00	MO	Rolla/Vichy	Rolla National	FDC 0/8726	VOR Rwy 22, Amdt 7B...
08/01/00	MT	Dillon	Dillon	FDC 0/8713	VOR/DME or GPS–B, Amdt 1...
08/01/00	MT	West Yellowstone	Yellowstone	FDC 0/8692	NDB or GPS Rwy 1, Amdt 3A...
08/01/00	MT	West Yellowstone	Yellowstone	FDC 0/8693	ILS Rwy 1, Amdt 3A...

[FR Doc. 00–20276 Filed 8–9–00; 8:45 am]
BILLING CODE 4910–13–M

DEPARTMENT OF TRANSPORTATION

Federal Aviation Administration

14 CFR Part 97

[Docket No. 30148; Admt. No. 2003]

Standard Instrument Approach Procedures; Miscellaneous Amendments

AGENCY: Federal Aviation Administration (FAA), DOT.

ACTION: Final rule.

SUMMARY: This amendment establishes, amends, suspends, or revokes Standard Instrument Approach Procedures (SIAPs) for operations at certain airports. These regulatory actions are needed because of the adoption of new or revised criteria, or because of changes occurring in the National Airspace System, such as the commissioning of new navigational facilities, addition of new obstacles, or changes in air traffic requirements. These changes are designed to provide safe and efficient use of the navigable airspace and to promote safe flight operations under instrument flight rules at the affected airports.

DATES: An effective date for each SIAP is specified in the amendatory provisions.

Incorporation by reference-approved by the Director of the Federal Register on December 31, 1980, and reapproved as of January 1, 1982.

ADDRESSES: Availability of matters incorporated by reference in the amendment is as follows:

For Examination—

1. FAA Rules Docket, FAA Headquarters Building, 800 Independence Avenue, SW., Washington, DC 20591,

2. The FAA Regional Office of the region in which the affected airport is located; or

3. The Flight Inspection Area Office which originated the SIAP.

For Purchase—Individual SIAP copies may be obtained from:

1. FAA Public Inquiry Center (APA–200), FAA Headquarters Building, 800 Independence Avenue, SW., Washington, DC 20591; or

2. The FAA Regional Office of the region in which the affected airport is located.

By Subscription—Copies of all SIAPs, mailed once every 2 weeks, are for sale by the Superintendent of Documents, U.S. Government Printing Office, Washington, DC 20402.

FOR FURTHER INFORMATION CONTACT: Donald P. Pate, Flight Procedure Standards Branch (AMCAFS–420), Flight Technologies and Programs Division, Flight Standards Service, Federal Aviation Administration, Mike Monroney Aeronautical Center, 6500 South MacArthur Blvd. Oklahoma City, OK 73169 (Mail Address: P.O. Box 25082 Oklahoma City, OK. 73125) telephone: (405) 954–4164.

SUPPLEMENTARY INFORMATION: This amendment to part 97 of the Federal Aviation Regulations (14 CFR part 97) establishes, amends, suspends, or revokes Standard Instrument Approach Procedures (SIAPs). The complete regulatory description of each SIAP is contained in official FAA form documents which are incorporated by reference in this amendment under 5 U.S.C. 552(a), 1 CFR part 51, and § 97.20 of the Federal Aviation Regulations (FAR). The applicable FAA Forms are identified as FAA Forms 8260–3, 8260–4, and 8260–5. Materials incorporated by reference are available for examination or purchase as stated above.

The large number of SIAPs, their complex nature, and the need for a special format make their verbatim publication in the **Federal Register** expensive and impractical. Further, airmen do not use the regulatory text of the SIAPs, but refer to their graphic depiction on charts printed by publishers of aeronautical materials. Thus, the advantages of incorporation by reference are realized and publication of the complete description of each SIAP contained in FAA form documents is unnecessary. The provisions of this amendment state the affected CFR (and FAR) sections, with the types and effective dates of the SIAPs. This amendment also identifies the airport, its location, the procedure identification and the amendment number.

The Rule

This amendment to part 97 is effective upon publication of each separate SIAP as contained in the transmittal. Some SIAP amendments may have been previously issued by the FAA in a National Flight Data Center (NFDC) Notice to Airmen (NOTAM) as an emergency action of immediate flight safety relating directly to published aeronautical charts. The circumstances which created the need for some SIAP amendments may require making them effective in less than 30 days. For the remaining SIAPs, an effective date at least 30 days after publication is provided.

Further, the SIAPs contained in this amendment are based on the criteria contained in the U.S. Standard for Terminal Instrument Procedures (TERPS). In developing these SIAPs, the TERPS criteria were applied to the conditions existing or anticipated at the affected airports. Because of the close and immediate relationship between these SIAPs and safety in air commerce, I find that notice and public procedure before adopting these SIAPs are impracticable and contrary to the public interest and, where applicable, that

good cause exists for making some SIAPs effective in less than 30 days.

Conclusion

The FAA has determined that this regulation only involves an established body of technical regulations for which frequent and routine amendments are necessary to keep them operationally current. It, therefore—(1) is not a ''significant regulatory action'' under Executive Order 12866; (2) is not a ''significant rule'' under DOT Regulatory Policies and Procedures (44 FR 11034; February 26, 1979); and (3) does not warrant preparation of a regulatory evaluation as the anticipated impact is so minimal. For the same reason, the FAA certifies that this amendment will not have a significant economic impact on a substantial number of small entities under the criteria of the Regulatory Flexibility Act.

List of Subjects in 14 CFR Part 97

Air Traffic Control, Airports, Navigation (Air).

Issued in Washington, DC on August 4, 2000.

L. Nicholas Lacey,

Director, Flight Standards Service.

Adoption of the Amendment

Accordingly, pursuant to the authority delegated to me, part 97 of the Federal Aviation Regulations (14 CFR part 97) is amended by establishing, amending, suspending, or revoking Standard Instrument Approach Procedures, effective at 0901 UTC on the dates specified, as follows:

PART 97—STANDARD INSTRUMENT APPROACH PROCEDURES

1. The authority citation for part 97 is revised to read as follows:

Authority: 49 U.S.C. 106(g), 40103, 40113, 40120, 44701; and 14 CFR 11.49(b)(2).

2. Part 97 is amended to read as follows:

§§ 97.23, 97.25, 97.27, 97.29, 97.31, 97.33, and 97.35 [Amended]

By amending: § 97.23 VOR, VOR/DME, VOR or TACAN, and VOR/DME or TACAN; § 97.25 LOC, LOC/DME, LDA, LDA/DME, SDF, SDF/DME; § 97.27 NDB, NDB/DME; § 97.29 ILS, ILS/DME, ISMLS, MLS, MLS/DME, MLS/RNAV; § 97.31 RADAR SIAPs; § 97.33 RNAV SIAPs; and § 97.35 COPTER SIAPs, identified as follows:

** * * Effective October 5, 2000*

Walnut Ridge, AR, Walnut Ridge Regional, VOR–A, Amdt 16
Walnut Ridge, AR, Walnut Ridge Regional, VOR/DME RWY 22, Amtd 13
Walnut Ridge, AR, Walnut Ridge Regional, LOC RWY 18, Amdt 3
Walnut Ridge, AR, Walnut Ridge Regional, NDB RWY 18, Amdt 4
Jacksonville, FL, Cecil Field , VOR RWY 9R, Orig
Alton/St. Louis, IL, St. Louis Regional, NDB OR GPS RWY 29, Amdt 10B
Carbondale/Murphysboro, IL, Southern Illinois, NDB OR GPS RWY 18L, Amdt 12C
Champaign-Urbana, IL, University of Illinois-Willard, NDB OR GPS RWY 32L, Amdt 10B
Danville, IL, Vermilion County, VOR/DME OR GPS RWY 3, Amdt 11B
Effingham, IL, Effingham County Memorial, LOC RWY 29, Amdt 1B
Galesburg, IL, Galesburg Muni, VOR OR GPS RWY 21, Amdt 6B
Macomb, IL, Macomb Muni, NDB OR GPS RWY 27, Amdt 2D
Pekin, IL, Pekin Muni, VOR/DME RNAV OR GPS RWY 9, Amdt 5A
Peoria, IL, Greater Peoria Regional, NDB OR GPS RWY 31, Amdt 14A
South Bend, IN, South Bend Regional, VOR OR GPS RWY 18, Amdt 7B
South Bend, IN, South Bend Regional, NDB OR GPS RWY 27L, Amdt 28C
Hays, KS, Hays Regional, RNAV RWY 34, Orig
Frenchville, ME, Northern Aroostock Regional, NDB RWY 32, Amdt 6
Frenchville, ME, Northern Aroostock Regional, RNAV RWY 14, Orig
Frenchville, ME, Northern Aroostock Regional, RNAV RWY 32, Orig
College Park, MD, College Park, RNAV RWY 15, Orig
College Park, MD, College Park, VOR/DME RNAV RWY 15, Amdt 3
Gaithersburg, MD, Montgomery County Airpark, VOR RWY 14, Amdt 3
Gaithersburg, MD, Montgomery County Airpark, NDB RWY 14, Amdt 1
Gaithersburg, MD, Montgomery County Airpark, RNAV RWY 14, Orig
Gaithersburg, MD, Montgomery County Airpark, VOR/DME RNAV RWY 14, Amdt 4, CANCELLED
Stevensville, MD, Bay Bridge, VOR/DME RWY 29, Amdt 1
Stevensville, MD, Bay Bridge, RNAV RWY 11, Orig
Stevensville, MD, Bay Bridge, GPS RWY 11, Orig, CANCELLED
Stevensville, MD, Bay Bridge, RNAV RWY 29, Orig
Westminster, MD, Carroll County Reg/Jack B. Poage Field, VOR–A, Amdt 1
Westminster, MD, Carroll County Reg/Jack B. Poage Field, VOR RWY 34, Amdt 4
Westminster, MD, Carroll County Reg/Jack B. Poage Field, RNAV RWY 16, Orig
Westminster, MD, Carroll County Reg/Jack B. Poage Field, RNAV RWY 34, Orig
Westminster, MD, Clearview Airpark, VOR–A, Amdt 4
Westminster, MD, Clearview Airpark, RNAV RWY 14, Orig
Chillicothe, OH, Ross County, VOR RWY 23, Amdt 3B
Columbus, OH, Bolton Field, NDB OR GPS RWY 4, Amdt 6B
Columbus, OH, Rickenbacker Intl, NDB OR GPS RWY 23L, Orig-A
Findlay, OH, Findlay, GPS RWY 18, Amdt 1A
Fremont, OH, Sandusky County Regional, GPS RWY 6, Orig-A
Fremont, OH, Sandusky County Regional, GPS RWY 24, Orig-A
Lancaster, OH, Fairfield County, LOC RWY 28, Amdt 1A
Lancaster, OH, Fairfield County, NDB OR GPS RWY 28, Amdt 8A
Lancaster, OH, Fairfield County, VOR/DME RNAV OR GPS RWY 10, Amdt 10A
Lima, OH, Lima Allen County, VOR OR GPS RWY 27, Amdt 14B
Marion, OH, Marion Muni, GPS RWY 24, Orig-A
Mount Vernon, OH, Knox County, VOR/DME RNAV OR GPS RWY 28, Amdt 2B
Springfield, OH, Springfield-Beckley Muni, NDB OR GPS RWY 24, Amdt 16A
Wapakoneta, OH, Neil Armstrong, LOC RWY 26, Amdt 3C
Wapakoneta, OH, Neil Armstrong, VOR/DME RNAV OR GPS RWY 26, Amdt 5C
Springfield, TN, Springfield-Robertson County, LOC RWY 4, Orig
Springfield, TN, Springfield-Robertson County, NDB RWY 4, Orig
Corsicana, TX, C. David Campbell Field-Corsicana Muni, VOR/DME–A, Amdt 1
Corsicana, TX, C. David Campbell Field-Corsicana Muni, VOR/DME–B, Amdt 1
Corsicana, TX, C. David Campbell Field-Corsicana Muni, NDB RWY 14, Amdt 4
Corsicana, TX, C. David Campbell Field-Corsicana Muni, NDB RWY 32, Amdt 3
Corsicana, TX, C. David Campbell Field-Corsicana Muni, RNAV RWY 14, Orig
Corsicana, TX, C. David Campbell Field-Corsicana Muni, RNAV RWY 32, Orig
Charlotte Amalie, VI, Cyril E King, GPS RWY 10, Orig, CANCELLED
Charlotte Amalie, VI, Cyril E King, RNAV RWY 10, Orig

[FR Doc. 00–20275 Filed 8–9–00; 8:45 am]

BILLING CODE 4910–13–M

DEPARTMENT OF COMMERCE

National Institute of Standards and Technology

15 CFR Part 287

[Docket No. 981222315–0219–02]

RIN 0693–AB49

Guidance on Federal Conformity Assessment Activities

AGENCY: National Institute of Standards and Technology (NIST), Commerce.

ACTION: Final policy guidance.

SUMMARY: This document contains final policy guidance on Federal agency use of conformity assessment activities. The provisions are solely intended to be used as guidance for agencies in their conformity assessment activities and do not preempt the agencies' authority and responsibility to make regulatory

procurement decisions authorized by statute or required to meet programmatic objectives and requirements.

DATES: This guidance becomes effective August 10, 2000.

FOR FURTHER INFORMATION CONTACT: Dr. Belinda Collins, Director, Office of Standards Services, National Institute of Standards and Technology, Building 820, MS 2100, Room 282, Gaithersburg, MD 20899. Phone: (301) 975–4000.

SUPPLEMENTARY INFORMATION:

Background

This guidance outlines Federal agencies' responsibility for evaluating the efficacy and efficiency of their conformity assessment activities. Each agency is responsible for coordinating its conformity assessment activities with those of other appropriate government agencies and with those of the private sector to make more productive use of the increasingly limited Federal resources available for the conduct of conformity assessment activities and to reduce unnecessary duplication.

This guidance applies to all agencies, which set policy for, manage, operate, or use conformity assessment activities and results, both domestic and international, except for activities carried out pursuant to treaties. ''Agency'' means any Executive Branch Department, independent commission, board, bureau, office, agency, government-owned or controlled corporation, or other establishment of the Federal government. It also includes any regulatory commission or board, except for independent regulatory commissions subject to separate statutory requirements regarding policy setting, management, operation, and use of conformity assessment activities. It does not include the legislative or judicial branches of the Federal government.

History of the Guidance

In February 1996, The National Technology Transfer and Advancement Act (NTAA) of 1995 was enacted by Congress. Section 12 of the Act directed NIST to coordinate conformity assessment activities of Federal, state and local entities with private sector technical standards activities and conformity assessment activities with the goal of eliminating any unnecessary duplication of conformity assessment activities. The Office of Management and Budget (OMB) Circular A–119, revised February 19, 1998 directed the Secretary of Commerce to issue guidance to the agencies to ensure effective coordination of Federal conformity assessment activities. The Director of the National Institute of Standards and Technology (NIST), United States Department of Commerce, published proposed guidance in the **Federal Register** on Federal conformity assessment activities on November 3, 1999 (64 FR 59691 (1999)). Closing date for comments was January 18, 2000.

Summary of Public Comments Received by the Agency in Response to the November 3, 1999 Request for Public Comments, and the Agency's Response to the Comments

NIST received comments from nine commentors, including: one national standards coordinating and conformity assessment accreditation body, one government agency, one international company, one laboratory accreditation body, one certification body, one consulting organization, and three trade associations in response to its request. In addition, in September 1999, the U.S. General Accounting Office (GAO) published a report, entitled ''GAO/GGD–99–170—Certification Requirements: New Guidance Should Encourage Transparency in Agency Decisionmaking,'' which contained a recommendation for including a section in the guidance on the issue of transparency in agency certification decisionmaking. The 51 comments as well as the GAO recommendation were considered in finalizing the guidance. The following summarizes the comments received and the agency's response to the comments.

General Comments

One national standards coordinating and conformity assessment accreditation body commented that the guidance should task only NIST with substantive objectives and identify the approach and procedures for accomplishing them.

Response: In OMB Circular A–119, OMB stated that ''(t)o ensure effective coordination, the Secretary of Commerce must issue guidance to the agencies.'' This guidance is a response to that mandate. The suggested approach would not be consistent with OMB's mandate.

One laboratory accreditation body commented the proposed rule should be withdrawn and that the guidance be issued as an annex to OMB Circular A–119.

Response: This document is intended to serve as guidance for Federal agencies in implementing their responsibilities under the NTTAA, and is not a rule. The guidance was issued at the direction of OMB, which chose not to include conformity assessment in OMB Circular A–119. This comment has been forwarded to OMB for consideration during the next revision of the Circular.

One government agency commented that while the examples in the guidance were helpful in describing how the guidance may be implemented, they should remain examples in the final version of the guidance.

Response: NIST agrees with this comment.

One government agency commented that Federal regulatory programs that engage in conformity assessment must apply a high degree of scrutiny to ensure that requirements are met. Therefore, it may be very difficult to rely on the work of private sector organizations, which understandably perform their activities for other motives and perhaps to a lesser degree of scrutiny. The guidance should present the option that private sector organizations rely on the conformity assessment activities of a Federal agency. This option would also promote the objectives under the proposed Section 287.1.

Response: Elimination of unnecessary duplication and complexity in conformity assessment activities can be accomplished by relying on private sector conformity assessment programs and activities. However, reduction in duplication and complexity can also be accomplished by Federal agency reliance on other governmental conformity assessment activities, by reliance on supplier's declaration of conformity, or by encouraging the private sector to rely on governmental activities. The NTTAA does not indicate a preference for any specific approach. The determination of which approach best meets agency objectives is the responsibility of the agency.

Comments on Section 287.1

One national standards coordinating and conformity assessment accreditation body commented that Section 287.1 should provide more information on the evaluation procedures to be used to evaluate the efficacy and efficiency of Federal conformity assessment activities.

Response: The variety of conformity assessment activities conducted by different Federal agencies precludes development of specific evaluation techniques that would apply to all agencies. Guidance on how to measure certain aspects of performance (regulatory burden, cost-benefit issues, etc.,) is available from the Office of Management and Budget (OMB) and from other sources within the Federal government, but this guidance must usually be tailored to reflect the type of

activities a given agency undertakes. NIST believes that evaluations of only one aspect of program performance can be misleading. Evaluations of program performance/effectiveness should consider all programmatic aspects, including an agency's legislative mandates, program objectives and resource availability.

One laboratory accreditation body commented that the second and third sentences of Section 287.1 should be replaced by: ''Each agency should seek ways in which it can use existing conformity assessment activities of the private sector instead of creating or maintaining their own activities.''

Response: The purpose and scope, as currently written in Section 287.1, best reflects the intent stated in the Act, which is to eliminate ''unnecessary duplication and complexity in the development and promulgation of conformity assessment requirements and measures.'' This can be accomplished in a number of ways. Using the results of private sector conformity assessment activities is only one method.

One laboratory accreditation body commented that the last sentence of Section 287.1 should be revised to cite the role of the U.S. Trade Representative (USTR) in overseeing the implementation of the U.S. trade obligations including commitments under the World Trade Organization (WTO) Agreement on Technical Barriers to Trade (TBT).

Response: The guidance is not intended to address U.S. obligations or the USTR's role in implementing the WTO Agreement or in other trade agreements. This guidance addresses only matters covered in the NTTAA. The Federal government's obligations under the World Trade Organization Agreement and other trade agreements are addressed elsewhere.

One consulting organization commented that NIST should state its position on who is responsible for accreditation in the United States.

Response: Accreditation activities can be conducted by either the public and/or the private sector. The appropriate sector to be assigned responsibility for accreditation should be determined on a case-by-case basis. The need for accreditation also needs to be determined on a case-by-case basis. There is no one-size-fits-all solution to this issue.

One certification body commented that the Interagency Committee on Standards Policy (ICSP) should be opened to regular participation and attendance by private sector standards developers and organizations providing conformity assessment services to facilitate cooperation and confidence between the government and private sector conformity assessment organizations.

Response: The ICSP has invited a number of standards developers and conformity assessment organizations to present information and viewpoints on topics of interest to the ICSP. However, the ICSP is an interagency committee. Membership is restricted to the Federal departments and agencies listed in its charter.

One certification body commented that the promotion of accreditation and/or recognition organizations that have not demonstrated added value to the marketplace should be discouraged.

Response: NIST agrees with this comment. Agencies are responsible for meeting programmatic objectives in a cost-effective manner. However, it is the responsibility of each agency to determine which approach best meets its needs.

One certification body commented that no single mechanism can meet the needs of all suppliers or acceptance authorities around the globe. New mechanisms that facilitate trade, provide regulatory confidence and protect public safety should be considered as they are developed and proven effective to meet the needs of supplier and acceptance authorities.

Response: NIST agrees with this comment. However, it remains the responsibility of each agency to determine which mechanisms are appropriate for application within its programs.

One trade association commented that the following objectives should be included in the proposed guidance:

- Eliminate the cost to government of conducting (developing) its own conformity assessment activities and thereby decrease the cost of goods procured and the burden of complying with agency regulation;
- Provide incentives and opportunities (to whom) to establish conformity assessment programs that serve national needs;
- Encourage long term growth of U.S. enterprises and promote efficiency and economic competition through harmonization of conformity assessment activities; and
- Further the policy of reliance upon the private sector to supply the government need for goods and services.

Response: While the statements listed above are a partial list of potential benefits from implementation of the guidance, the objective of the guidance was clearly and succinctly defined in the NTAAA—to eliminate ''unnecessary duplication and complexity in the development and promulgation of conformity assessment requirements and measures.''

Comments on Section 287.2

One national standards coordinating and conformity assessment accreditation body commented that the definition of recognition is too narrow in section 287.2 and is inconsistent with the way it is used in the example in section 287.4.

Response: While the definition for the term ''recognition'' in Section 287.2 is appropriate; the term has been changed in the example.

One national standards coordinating and conformity assessment accreditation body and one trade association commented that the definitions in the International Organization for Standardization/International Electrotechnical Commission (ISO/IEC) Guide 2 should be cited without modification.

Response: The definitions in section 287.2 were based on ISO/IEC Guide 2, but the definitions have been modified to better address the nature of Federal government conformity assessment activities. Definitions were considered necessary because agencies do not use consistent terminology in their regulatory and procurement conformity assessment programs. This inconsistent use of terminology could create potential confusion for agencies reading the guidance. NIST decided to define only those terms which were considered to be necessary to understand the guidance.

One laboratory accreditation body commented that the World Trade Organization (WTO) Agreement on Technical Barriers to Trade (TBT) definition of conformity assessment should be referenced and ''mandatory administrative procedures'' should not be excluded from the definition.

Response: ISO/IEC Guide definitions have been used in accordance with the NTTAA's requirements that preference be given to the use of voluntary consensus standards. There is also no evidence in the Act or legislative history that Congress intended to include mandatory administrative procedures.

The Occupational Safety and Health Administration (OSHA) commented that some of the key definitions in the notice do not correctly depict the Occupational Safety and Health Administration's (OSHA's) National Recognized Testing Laboratory (NRTL) Program. OSHA recognizes a testing/certification body under the NRTL Program, not an accreditation body. In addition, the agency commented that OSHA's

recognition does not mean that an organization is ''competent'' in testing or in certification to the extent that ''competent'' means adept, proficient or a similar term. To obtain recognition, an organization must demonstrate that it meets the requirements in 29 CFR 1910.7, but this regulation does not include requirements for proficiency or other criteria to judge ''competence.''

Response: NIST agrees that agencies do not use standardized terminology in their conformity assessment activities. In defining key terms, NIST intended to let the reader know what is meant by that term within the context of the guidance. NIST recognizes that the same term may be used by different agencies to mean very different types of activities. A footnote will be added to the definition for ''accreditation'' to accommodate OSHA's activities.

OSHA also commented that the definition of conformity assessment describes requirements as being applicable to ''products, services, and systems,'' but not to ''organizations'' and requested that the word ''organizations'' be added.

Response: The word ''organizations'' has been added.

One international company, one laboratory accreditation body, and one trade association commented that the guidance should identify supplier's declaration as an appropriate option for agencies to consider in their conformity assessment policies, taking into account the appropriate balance of risks and benefits of first party (supplier), second party, and third party conformity assessment for specific products and services. The same trade association recommended that NIST amend the definition in the proposed Section 287.2 as follows: In the definition of conformity assessment, add ''suppliers declaration of conformity'' after ''inspection'' and add a definition for ''supplier's declaration of conformity.''

Response: The guidance now includes reference to first, second and third party conformity assessment activities and procedures. The definition of conformity assessment has been amended to include ''supplier's declaration of conformity.'' A definition of ''supplier's declaration of conformity'' has also been included. However, the guidance does not intend to suggest that any one method or activity is preferable. It is the responsibility of each agency to select the conformity assessment activities and procedures, which will best meet its legislative mandates and programmatic objectives in the most cost-effective and efficient manner.

Comments on Section 287.3

One national standards coordinating and conformity assessment accreditation body commented that NIST should be charged in section 287.3 with ensuring that other agencies are aware of their obligation to adopt policies needed to accomplish the purpose of this guidance.

Response: While NIST is charged with coordinating conformity assessment activities, agencies remain responsible for their own conformity assessment activities, including the adoption of any policies that agencies feel are needed to operate in accordance with their statutory mandates. NIST is available and willing to assist agencies in carrying out this responsibility and to provide guidance as needed.

One national standards coordinating and conformity assessment accreditation body and one trade association commented that some attention should be given in section 287.3 to NIST's obligations beyond the Federal level, especially to its obligations at the state level.

Response: NIST partially agrees with this comment. The language in the Act is unclear as to what Congress intended NIST to do with regard to state conformity assessment activities. However, in the Congressional House Record of 2/27/96 for The National Technology Transfer and Advancement Act (NTTAA), Representative Morella stated that: ''Section 12 Standards Conformity. Restates existing authorities for the National Institute of Standards and Technology (NIST) activities in standards and conformity assessment. Requires NIST to coordinate among Federal agencies, survey existing state and Federal practices, and report back to Congress on recommendations for improvements in these activities.'' NIST is undertaking studies of existing state conformity assessment practices, subject to resource limitations. NIST also plans to undertake additional activities with the states as resources become available. Any activities undertaken by NIST will be conducted in a manner that respects state sovereignty issues. NIST has added the following statement to the guidance: ''To the extent that resources are available, NIST will develop information on existing state conformity assessment practices; and, upon request by a state government agency, will work with that agency to reduce duplication and complexity in state conformity assessment activities.''

One laboratory accreditation body commented that a new clause should be added to section 287.3 so that NIST would also ''encourage government participation and use of private sector, conformity assessment activities to the maximum extent practical.''

Response: NIST disagrees. NIST is obligated to assist other Federal agencies in reducing duplication and complexity in their conformity assessment activities. The use of private sector conformity assessment activities is only one of a number of methods that can be used by an agency to accomplish this goal. It remains the responsibility of the agency to determine which method is most appropriate for its specific applications.

Comments on Section 287.4

One national standards coordinating and conformity assessment accreditation body commented that the example in section 287.4, which uses the term ''recognition,'' does not support the use of the qualifier ''mutual.''

Response: The agency agrees with this comment. The qualifier ''mutual'' has been removed and the term ''recognition'' has been replaced.

One national standards coordinating and conformity assessment accreditation body and one laboratory accreditation body commented that a list of references, containing the documents of the organizations cited in section 287.4 should be inserted in this section or that NIST should provide a list of specific conformity assessment guides and standards, perhaps as a separate document.

Response: NIST believes that a better solution is to address an agency's need for a list of applicable standards on a case-by-case basis. NIST's National Center for Standards and Certification Information (NCSCI) assists agencies to identify possible conformity assessment standards/guides, which may be of interest for a specific application. The organizations listed in the guidance are examples, and are not intended to represent a comprehensive list of organizations that develop standards and guidance in the conformity assessment area. A specific list could omit standards of potential interest to agencies in conformity assessment related areas or from other organizations not included as examples. In addition, such a list would rapidly become outdated as ISO guides and standards in the conformity assessment area are revised, reissued, or removed. Lastly, standards that appear on such a list might be presumed by some to have a ''special blessing'' by NIST, which could create misunderstanding. Agencies can contact NCSCI for a list of standards in their area of interest.

One national standards coordinating and conformity assessment accreditation body commented that section 287.4 should be rewritten to address the policies and procedures that should be adopted by agencies through the mechanism of the Interagency Committee on Standards Policy (ICSP). The development of a policy on conformity assessment might be stipulated that would address the roles of supplier's declaration, third parties, and accreditors.

Response: As noted in section 287.3(a), NIST will assist ''the ICSP in developing policies and guidance on conformity assessment issues.'' Agency Standards Executives serving on the ICSP are responsible for determining which policies and procedures the ICSP should develop, which might be useful for consideration within their agencies. However, the individual agency is responsible for the final selection and implementation of the policies and procedures needed by the agency to implement the goals of the NTTAA.

One national standards coordinating and conformity assessment accreditation body commented that the ICSP Agency Standards Executives' suitability for serving as change agents with respect to the conformity assessment activities of the Federal government should be reconsidered.

Response: The selection of the ICSP Agency Standards Executives is the responsibility of the Agency, as noted in section 287.4(n). The agency is responsible for selecting an individual who is capable of carrying out the guidance in OMB Circular A–119 as well as the guidance in this document. If needed, the Agency is free to assign additional personnel to assist the Agency Standards Executive in carrying out these responsibilities.

One international company commented that the examples listed in section 287.4(g) are limited to laboratory issues and organizations that are close to the Federal process. It would be appropriate to list some other organizations such as the American National Standards Institute (ANSI) or the International Organization for Standardization's (ISO) Committee on Conformity Assessment (CASCO) to indicate the broader direction that is intended.

Response: The examples cited have been included in the guidance.

One international company commented that organizations, such as the American National Standards Institute (ANSI) or the International Organization for Standardization's (ISO) Committee on Conformity Assessment (CASCO) be listed in section 287.4(j) to indicate the broader direction that is intended.

Response: Section 287.4(j) does not list examples. Participation in the development of any private sector conformity assessment standards (consistent with the mission and objectives of the agency) would be included in this section. ANSI does not develop standards, so it would not be included in this section. ISO is a private sector organization, which develops conformity assessment standards, so participation in ISO CASCO is included in this section.

One laboratory accreditation body commented that in section 287.4(c), agencies need to consider ways to use not only conformity assessment results of others (both domestic and foreign), but the conformity assessment activities themselves as a replacement for their own activities.

Response: This comment addresses matters beyond the scope of this guidance. Regulatory and procurement obligations of Federal agencies have been authorized by Congress, and such activities/systems cannot be replaced by private sector activities/systems without congressional approval or legislative change.

One laboratory accreditation body commented that the examples in sections 287.4(e) and (h) are weak as they only suggest an agency might supplement (not replace) its own activities with outside conformity assessment activities mainly administered by other government agencies.

Response: In section 287.4(e), NIST will include the example of the Federal Communications Commission's FCC Telecommunications Certification Body (TCB) program, which allows designated private entities to issue telecommunications equipment approvals for specified regulatory requirements in essentially the same manner as the FCC. FCC has also replaced requirements for premarketing approval with supplier's declaration of conformity for certain types of equipment.

One laboratory accreditation body commented that in section 287.4(f), it is not clear why ''mutual recognition'' is necessary or desirable between agencies when one-way recognition may also be appropriate.

Response: This section has been reworded.

One laboratory accreditation body commented that section 287.4(g) should delete any reference to the National Environmental Laboratory Accreditation Conference (NELAC) because NELAC specifically prohibits private sector laboratory accreditation bodies from being part of NELAC by suggesting that accreditation is an inherent government function. This is contrary to the intent of the NTTAA, which encourages use of private sector conformity assessment activities.

Response: The purpose of the NTTAA is to eliminate unnecessary duplication and complexity in conformity assessment activities. While this can be done by relying on private sector conformity assessment programs and activities, it can also be accomplished by relying on other governmental activities, by relying on a supplier's declaration of conformity, or by encouraging the private sector to rely on governmental activities. While agencies should consider alternative approaches in their rulemaking and procurement activities, the determination of which approach best meets agency objectives is the responsibility of the agency.

One laboratory accreditation body and one trade association commented that sections 287.4(i) should cite the USTR's role in trade policy. The same trade association commented that sections 287.4(j) should also cite the USTR's role.

Response: While NIST recognizes the important role that the USTR has in developing trade related policies, as well as the responsibilities placed on Federal agencies as a result of trade agreements, such as the WTO Agreement, these roles and responsibilities are defined in other legislation and related documents. This guidance addresses only matters covered in the NTTAA.

One laboratory accreditation body commented that there is no need for separate government recognition systems if equivalent systems exist in the private sector that provide equivalent recognition. Government recognition systems would add cost without adding value and would create unnecessary duplication and complexity, the opposite intent of the NTTAA.

Response: In trade agreements, the need for government recognition of conformity assessment bodies is determined not only by the U.S. Government, but also by the other countries signatory to such an agreement. Since some governments do not deem the use of private sector systems to be adequate proof of competence in the absence of governmental recognition, such recognition becomes a requirement under the terms of the specific agreement. For domestic regulatory and procurement issues, it is the responsibility of each Federal agency to

determine whether use of a private sector system can adequately address all of its programmatic objectives and any relevant legislative mandates in a cost-effective manner.

One trade association commented that while the reference to the National Cooperation for Laboratory Accreditation (NACLA) and the National Environmental Laboratory Accreditation Conference (NELAC) in section 287.4(g) begins to address the issue of duplication of accreditations for testing programs, the proposed guidance should also provide direction related to other forms of conformity assessment, such as certification and registration.

Response: The organizations listed in section 287.4(g) are intended to serve only as examples of activities in which agencies should consider participation. The activities of ANSI have been added to the list of examples to better illustrate the broad range of activities where Federal participation is encouraged.

One trade association commented that the wording in section 287.4(c) should strongly encourage the use of private sector conformity assessment programs in lieu of the development of government programs. The same trade association commented that Section 287.4(e) include a requirement that NIST provide a centralized coordinating function in the determination of acceptable private sector conformity assessment practices. To allocate the responsibility to each agency only continues the duplication of accreditation and approval processes. NIST should advocate the use of private sector accreditation bodies that comply with national and international criteria as the tool to be used for determination of acceptance. The same trade association also commented that in section 287.4(f), mutual recognition of private sector procedures should be recommended for all agencies.

Response: The purpose of the NTTAA is to eliminate unnecessary duplication and complexity in conformity assessment activities. While this can be done by relying on private sector conformity assessment programs and activities, it can also be accomplished by relying on other governmental activities, by relying on a supplier's declaration of conformity, or by encouraging the private sector to rely on governmental activities. While agencies should consider alternative approaches in their rulemaking and procurement activities, the determination of which approach best meets agency objectives is the responsibility of the agency.

One trade association commented that in section 287.4(j), agencies should be encouraged to participate in the development of private sector conformity assessment procedures and programs as well as the development of standards. RESPONSE: NIST partially agrees with this comment. The responsibility for participation in conformity assessment programs and activities, as distinct from standards development, is covered in section 287.4(g). The examples in this section will be expanded to include participation in ANSI's conformity assessment related activities to better illustrate the intention of this section.

GAO Recommendation: GAO recommended that the guidance include a section that ''specifically addresses the transparency of agencies' certification decisionmaking.'' GAO recommended that the guidance ''should encourage agencies to publicly explain why particular certification decisions were made or how certification decisions in the future will be made.''

Response: A new item has been added to section 287.4 of the guidance to address this issue.

Comments on Section 287.5

One national standards coordinating and conformity assessment accreditation body commented that section 287.5 places responsibility for both standards and conformity assessment with one representative from each agency and noted that a significant majority of persons with major responsibilities for standards have no responsibility or knowledge of conformity assessment.

Response: NIST partially disagrees with this comment. The Office of Management and Budget (OMB) A–119 indicates that more than one Standards Executive was not contemplated by OMB. That is, the Circular speaks of ''a'' Standards Executive (14(c)) and ''the'' Standards Executive (14(d)), etc. NIST and OMB believe that having only one Standards Executive would facilitate better coordination and communication for both standards and their related conformity assessment activities. However, both also recognize that because responsibility for an agency's conformity assessment activities may cut across organizational boundaries, it may be necessary to assign additional agency personnel to carry out these new responsibilities. The agency must ensure that these responsibilities are coordinated and should carefully define each staff member's responsibilities to ensure that the duties defined under this guidance and under OMB Circular A–119 are effectively carried out.

One laboratory accreditation body commented that section 287.5 should contain reporting requirements for the annual agency reports to NIST and OMB, including whether each agency gave consideration to the use of relevant private sector, conformity assessment activities and the reason for not using them—similar to agencies' reporting under OMB Circular A–119. NIST itself should be required to make similar reports justifying it own conformity assessment activities.

Response: Mandatory agency reporting requirements regarding conformity assessment activities were not specified in the NTTAA. Conformity assessment reporting requirements for all agencies, including NIST, remain voluntary.

One government agency commented that the guidance states that each agency ''should coordinate its * * * activities'' to make ''more productive use of * * * limited Federal resources * * *.'' However, the ''responsibilities'' under the proposed Section 2987.5 and the actual coordination could demand resources that may more than offset any gains expected from the coordination.

Response: The guidance does not recommend that agencies undertake activities where the costs involved are likely to exceed the benefits realized. While coordination is often beneficial and should always be considered, the agencies themselves are responsible for the final decision as to the appropriate level of coordination and commitment of resources to the agency's conformity assessment activities.

One trade association commented that a new responsibility should be added to this section— ''To use private sector conformity assessment program results in all agency assessment programs.''

Response: The goal of the guidance, which is spelled out in the NTTAA, can be accomplished in a number of ways. It is the responsibility of each agency to determine which option or set of procedures is most appropriate for its application.

Purpose of This Guidance

This guidance outlines Federal agencies' responsibility for evaluation the efficacy and efficiency of their conformity assessment activities. Each agency is responsible for coordinating its conformity assessment activities with those of other appropriate government agencies and with those of private sector to make more productive use of the increasingly limited Federal resources available for the conduct of conformity assessment activities and to reduce unnecessary duplication.

Applicability of This Guidance

This guidance applies to all agencies, which set policy for, manage, operate, or

use conformity assessment activities and results, both domestic and international, except for activities carried out pursuant to treaties. ''Agency'' means any Executive Branch Department, independent commission, board, bureau, office, agency, government-owned or controlled corporation, or other establishment of the Federal government. It also includes any regulatory commission or board, except for independent regulatory commissions subject to separate statutory requirements regarding policy setting, management, operation, and use of conformity assessment activities. It does not include the legislative or judicial branches of the Federal government.

Rulemaking Requirements

Under 5 U.S.C. 553(b)(A), this guidance is not subject to the notice and comment requirements of the Administrative Procedure Act. Furthermore, pursuant to 5 U.S.C. 553(d)(2), this guidance is not subject to the delayed effective date requirement of the Act. The Director has chosen to publish this document for comment only to obtain input from persons who may be affected by the guidance.

PRA Clearance

This policy statement does not contain a collection of information for purposes of the Paperwork Reduction Act.

Executive Order 12866

It has been determined that this action is significant for purposes of Executive Order 12866.

Regulatory Flexibility Act

This action is exempt from the analytical requirements of the Regulatory Flexibility Act because notice and comment are not required for this action by section 553 of the Administrative Procedure Act or any other law.

List of Subjects in 15 CFR Part 287

Conformity assessment, Procurement, Reporting and recordkeeping requirements.

Dated: August 4, 2000.

Karen H. Brown,

Deputy Director.

For the reasons set forth in the preamble, Part 287 is added to subchapter J of chapter II in Title 15 of the Code of Federal Regulations (CFR) to read as follows:

PART 287—GUIDANCE ON FEDERAL CONFORMITY ASSESSMENT

Sec.
287.1 Purpose and scope of this guidance.
287.2 Definitions.
287.3 Responsibilities of the National Institute of Standards and Technology.
287.4 Responsibilities of Federal agencies.
287.5 Responsibilities of an Agency Standards Executive.

Authority: Sec. 12, Pub. L. 104–113, 110 Stat. 782 (15 U.S.C. 272).

§ 287.1 Purpose and scope of this guidance.

(a) This part provides guidance for each Federal agency to use in evaluating the efficacy and efficiency of its conformity assessment activities. Each agency should coordinate its conformity assessment activities with those of other appropriate government agencies and with those of the private sector to reduce unnecessary duplication. This guidance is intended to help Federal agencies improve the management and coordination of their own conformity assessment activities with respect to other government entities and the private sector. This will help ensure more productive use of the increasingly limited Federal resources available to conduct conformity assessment activities. This will also support the role of the U.S. Government in pursuing international trade and other related negotiations and agreements with foreign countries and U.S. industry in pursuing agreements with foreign national and international private sector organizations.

(b) This guidance applies to all agencies, which set policy for, manage, operate, or use conformity assessment activities and results, both domestic and international, except for activities carried out pursuant to treaties.

(c) This guidance does not preempt the agencies' authority and responsibility to make regulatory or procurement decisions authorized by statute or required to meet programmatic objectives and requirements. These decision-making activities include: determining the level of acceptable regulatory or procurement risk; setting the level of protection; balancing risk, cost and availability of technology (where statutes permit) in establishing regulatory and procurement objectives; and determining or implementing procurement or regulatory requirements necessary to meet programmatic or regulatory objectives. Each agency retains broad discretion in its selection and use of regulatory and procurement conformity assessment practices and may elect not to use or recognize alternative conformity assessment practices if the agency deems them to be inappropriate, inadequate, or inconsistent with statutory criteria or programmatic objectives and requirements. Nothing contained herein shall give any party any claim or cause of action against the Federal government or any agency thereof. Each agency remains responsible for representation of the agency's views on conformity assessment in matters under its jurisdiction. Each agency also remains the primary point of contact for information on the agency's regulatory and procurement conformity assessment actions.

§ 287.2 Definitions.[1]

Accreditation means a procedure used to provide formal notice that a body or person is competent to carry out specific tasks. These tasks include: sampling and testing; inspection; certification; and registration.[2]

Agency means any Executive Branch Department, independent commission, board, bureau, office, agency, government-owned or controlled corporation, or other establishment of the Federal government. It also includes any regulatory commission or board, except for independent regulatory commission subject to separate statutory requirements regarding policy setting, management, operation, and use of conformity assessment activities. It does not include the legislative or judicial branches of the Federal government.

Agency Standards Executive means an official designated by an agency as its representative on the Interagency Committee for Standards Policy (ICSP) and delegated the responsibility for agency implementation of OMB Circular A–119 and the guidance in this part.

Certification means a procedure used to provide written assurance that a product, process, service, or person's qualifications conforms to specified requirements.

Conformity assessment means any activity concerned with determining directly or indirectly that requirements are fulfilled. Requirements for products,

[1] Definitions of accreditation, certification, conformity assessment, inspection, supplier's declaration of conformity, registration and testing are based on the International Organization for Standardization (ISO)/International Electrotechnical Commission (IEC), Guide 2 (1996). In certain industrial sectors, it is recognized that organizations other than ISO or IEC may issue definitions relevant to conformity assessment, such as the Codex Alimentarius Commission with respect to the food industry sector.

[2] For some agencies, accreditation may mean that a body or person meets requirements defined in a specific section(s) of the CFR. The referenced section(s) may include only limited requirements for demonstration of technical competency.

services, systems, and organizations are those defined by law or regulation or by an agency in a procurement action. Conformity assessment includes: sampling and testing; inspection; supplier's declaration of conformity; certification; and quality and environmental management system assessment and registration. It also includes accreditation and recognition. Conformity assessment does not include mandatory administrative procedures (such as registration notification) for granting permission for a good or service to be produced, marketed, or used for a stated purpose or under stated conditions. Conformity assessment activities may be conducted by the supplier (first party) or by the buyer (second party) either directly or by another party on the supplier's or buyer's behalf, or by a body not under the control or influence of either the buyer or the seller (third party).

Inspection is defines ad the evaluation by observation and judgment accompanied as appropriate by measurement, testing or gauging of the conformity of a product, process or service to specified requirements.

NIST means the National Institute of Standards and Technology, an agency within the United States Department of Commerce.

Recognition means a procedure used to provide formal notice that an accreditation body is competent to carry out specific tasks. These tasks include: the accreditation of testing laboratories and inspection, certification, and registration bodies. A governmental recognition system is a set of one or more procedures used by a Federal agency to provide recognition.

Registration means a procedure used to give written assurance that a system conforms to specified requirements. Such systems include those established for the management of product, process or service quality and environmental performance.

Sampling means the selection of one or more specimens of a product, process, or service for the purpose of evaluating the conformity of the product, process or service to specified requirements.

Supplier's declaration of conformity means a procedure by which a supplier gives written assurance that a product, process, service or organization conforms to specified requirements.

Testing means the action of carrying out one or more technical operations (tests) that determine one or more characteristics or performance of a given product, material, equipment, organism, person's qualifications, physical phenomenon, process, or service according to a specified technical procedure (test method).

§ 287.3 Responsibilities of the National Institute of Standards and Technology.

(a) Work with agencies through the Interagency Committee on Standards Policy (ICSP) to coordinate Federal, state and local conformity assessment activities with private sector conformity assessment activities. NIST chairs the ICSP; assists the ICSP in developing and publishing policies and guidance on conformity assessment related issues; collects and disseminates information on Federal, state and private sector conformity assessment activities; and increases public awareness of the importance of conformity assessment and nature and extent of national and international conformity assessment activities.

(b) Encourage participation in the ICSP by all affected agencies and ensure that all agency views on conformity assessment are considered.

(c) To the extent that resources are available, develop information on state conformity assessment practices; and, upon request by a state government agency, work with that state agency to reduce duplication and complexity in state conformity assessment activities.

(d) Review within three years from August 10, 2000, the effectiveness of the final guidance and recommend modifications to the Secretary as needed.

§ 287.4 Responsibilities of Federal agencies.

Each agency should:

(a) Implement the policies contained in the guidance in this part.

(b) Provide a rationale for its use of specified conformity assessment procedures and processes in rulemaking and procurement actions to the extent feasible. Further, when notice and comment rulemaking is otherwise required, each agency should provide the opportunity for public comment on the rationale for the agency's conformity assessment decision.

(c) Use the results of other governmental agency and private sector organization conformity assessment activities to enhance the safety and efficacy of proposed new conformity assessment requirements and measures. An example of this would be to collect and review information on similar activities conducted by other Federal, state and international organizations and agencies and private sector organizations to determine if the results of these activities can be used to improve the effectiveness of a proposed Federal agency conformity assessment activity.

(d) Use relevant guides or standards for conformity assessment practices published by domestic and international standardizing bodies as appropriate in meeting regulatory and procurement objectives. Guides and standards for sampling, testing, inspection, certification, quality and environmental management systems, management system registration and accreditation are issued by organizations which include, but are not limited to, the American National Standards Institute, the International Organization for Standardization (ISO), the International Electrotechnical Commission (IEC), the International Telecommunications Union (ITU) and the Organization for Economic Cooperation and Development (OECD), the World Health Organization (WHO), and the Codex Alimentarius Commission. Each agency retains responsibility for determining which, if any, of these documents are relevant to its needs.

(e) Identify appropriate private sector conformity assessment practices and programs and consider the results of such practices and/or programs as appropriate in existing regulatory and procurement actions. Responsibility for the determination of appropriateness rests with each agency. Examples: an agency could use the results of private sector or other governmental conformity assessment activities to schedule procurement type audits more effectively. This could allow agencies to reduce the number and extent of audits conducted at companies which are performing in accordance with contract specifications and which are under review by a third party or another agency and to concentrate agency audit efforts on companies which have shown problems in conforming to contract specifications. Another example is the Federal Communications Commission's (FCC) Telecommunication Certification Body (TCB) program, which allows designated private entities to issue telecommunications equipment approvals for specified regulatory requirements. In addition, under Part 15, FCC premarketing approval requirements for certain types of equipment have been replaced with suppliers declaration of conformity to the regulations, provided test results supporting the declaration are obtained from an accredited testing lab.

(f) Consider using the results of other agencies' conformity assessment procedures. Example: An agency could use the results of another agency's inspection/audit of a supplier to eliminate or reduce the scope of its own inspection/audit of that supplier.

(g) Participate in efforts designed to improve coordination among governmental and private sector conformity assessment activities. These efforts include, but are not limited to, the National Cooperation for Laboratory Accreditation (NACLA) organization, the National Environmental Laboratory Accreditation (NELAC), the International Organizations for Standardization's (ISO) Committee on Conformity Assessment (CASCO), conformity assessment related activities of the American National Standards Institute (ANSI), and ICSP working groups dealing with conformity assessment issues.

(h) Work with other agencies to avoid unnecessary duplication and complexity in Federal conformity assessment activities. Examples: An agency can participate in another agency's conformity assessment activities by conducting joint procurement audits/inspections of suppliers that sell to both agencies. An agency can share conformity assessment information with other agencies. An agency can use conformity assessment information provided by other agencies to the extent appropriate to improve the effectiveness and efficiency in its own conformity assessment activities. Conformity assessment information may include: Conformity assessment procedures and results, technical data on the operation of conformity assessment programs, processing methods and requirements for applications, fees, facility site data, complaint review procedures, and confidentiality procedures.

(i) Encourage domestic and international recognition of U.S. conformity assessment results by supporting the work of the U.S. Government in international trade and related negotiations with foreign countries and U.S. industry in pursuing agreements with foreign national and international private sector organizations and any resulting activities/requirements resulting from those negotiations/agreements.

(j) Participate in the development of private sector conformity assessment standards to ensure that Federal viewpoints are represented.

(k) Work with other agencies to harmonize Federal requirements for quality and environmental management systems for use in procurement and regulation, including provisions which will allow the use of one quality or environmental management system per supplier facility in the Federal procurement process and the sharing and usage of audit results and related information as appropriate.

(l) Work with other ICSP members, NIST, and the private sector to develop national infrastructures for coordinating and harmonizing U.S. conformity assessment needs, practices and requirements in support of the efforts of the U.S. Government and U.S. industry to increase international market access for U.S. products.

(m) Work with other ICSP members, NIST, and the private sector as necessary and appropriate to establish criteria for the development and implementation of governmental recognition systems to meet government recognition requirements imposed by other nations and regional groups to support the efforts of the U.S. Government to facilitate international market access for U.S. products.

(n) Assign an Agency Standard Executive responsibility for coordinating the agency-wide implementation of the guidance in this part.

§ 287.5 Responsibilities of an Agency Standards Executive.

In addition to carrying out the duties described in OMB Circular A–119 related to standards activities, an Agency Standards Executive should:

(a) Promote the following goals:

(1) Effective use of agency conformity assessment related resources and participation in conformity assessment related activities of agency interest.

(2) Development and dissemination of agency technical and policy positions.

(3) Development of agency positions on conformity assessment related issues that are in the public interest.

(b) Ensure that agency participation in conformity assessment related activities is consistent with agency missions, authorities, priorities, and budget.

(c) Cooperate with NIST in carrying out agency responsibilities under the guidance in this part.

(d) Consult with NIST, as necessary, in the development and issuance of internal agency procedures and guidance implementing the policies in this part.

(e) Establish an ongoing process for reviewing his/her agency's existing conformity assessment activities and identifying areas where efficiencies can be achieved through coordination with other agency and private sector conformity assessment activities.

(f) Work with other parts of his/her agency to develop and implement improvements in agency conformity assessment related activities.

(g) Report to NIST, on a voluntary basis, on agency conformity assessment activities for inclusion in the annual report to the Office of Management and Budget (OMB) on the agency's implementation of OMB Circular A–119.

[FR Doc. 00–20262 Filed 8–9–00; 8:45 am]

BILLING CODE 3510–13–M

DEPARTMENT OF HEALTH AND HUMAN SERVICES

Food and Drug Administration

21 CFR Parts 201, 310, and 344

[Docket No. 77N–334S]

RIN 091O–AA01

Topical Otic Drug Products for Over-the-Counter Human Use; Products for Drying Water-Clogged Ears; Amendment of Monograph; Lift of Partial Stay of Effective Date

AGENCY: Food and Drug Administration, HHS.

ACTION: Final rule; lift of partial stay of effective date.

SUMMARY: The Food and Drug Administration (FDA) is issuing a final rule amending the monograph for over-the-counter (OTC) topical otic drug products (the regulation that establishes conditions under which these drug products are generally recognized as safe and effective and not misbranded). The amendment adds conditions for marketing topical otic drug products for drying water-clogged ears and includes labeling in the new OTC drug format. The agency is amending its final regulations for OTC drug labeling requirements to include the new flammability warning for topical otic drug products for drying water-clogged ears. The agency is also lifting a partial stay of the effective date of certain provisions of the regulations for topical otic drug products for the drying of water clogged ears. This final rule is part of the ongoing review of OTC drug products conducted by FDA.

DATES:

Effective Date: This rule is effective May 17, 2002. The stay of § 310.545 (a)(15)(ii) for topical otic drug products for the drying of water-clogged ears that published at 60 FR 42436 on August 16, 1995, and effective June 22, 1995, is lifted effective September 11, 2000.

Compliance Date: The compliance date for products with annual sales less that $25,000 is May 17, 2003. The compliance date for all other OTC drug products is May 17, 2002.

FOR FURTHER INFORMATION CONTACT: Gerald M. Rachanow, Center for Drug Evaluation and Research (HFD–560), Food and Drug Administration, 5600

Fishers Lane, Rockville, MD 20857, 301–827–2307.

SUPPLEMENTARY INFORMATION:

I. Background

In the **Federal Register** of July 9, 1982 (47 FR 30012), the agency published a tentative final monograph for OTC topical otic drug products used as earwax removal aids. Subsequently, in the **Federal Register** of July 30, 1986 (51 FR 27366), the agency proposed to amend this tentative final monograph to consider OTC topical otic drug products for the prevention of swimmer's ear and for the drying of water-clogged ears. At that time, no topical otic drug products for these conditions were proposed as generally recognized as safe and effective and not misbranded. The agency, however, did propose Category I (monograph) labeling for such products in case data were submitted that resulted in upgrading any ingredient(s) to monograph status in a final rule.

In the **Federal Register** of August 8, 1986 (51 FR 28656), the agency issued a final rule establishing part 344 (21 CFR part 344) for topical otic drug products for OTC human use. The monograph included one active ingredient for use as an earwax removal aid.

In the **Federal Register** of November 7, 1990 (55 FR 46914), (hereinafter referred to as the 1990 final rule) the agency published a final rule establishing that certain active ingredients that had been under consideration in a number of OTC drug rulemaking proceedings were not generally recognized as safe and effective. The 1990 final rule was effective on May 7, 1991, and included in § 310.545(a)(15) (21 CFR 310.545(a)(15)) the active ingredient acetic acid, which had been under consideration as part of this rulemaking for OTC topical otic drug products for the prevention of swimmer's ear and for the drying of water-clogged ears. After the 1990 final rule published, only two ingredients remained to be evaluated in this rulemaking: Isopropyl alcohol and anhydrous glycerin.

In the **Federal Register** of February 15, 1995 (60 FR 8916), the agency issued a final rule establishing that OTC topical otic drug products for prevention of swimmer's ear or for drying water-clogged ears were not generally recognized as safe and effective for OTC use and were new drugs under section 201(p) of the Federal Food, Drug, and Cosmetic Act (the act) (21 U.S.C. 321(p)). The agency listed the ingredients considered in the rulemaking (i.e., glycerin, anhydrous glycerin, and isopropyl alcohol) in § 310.545(a)(15)(ii), with an effective date of August 15, 1995, after which products containing these ingredients for these uses could no longer be initially introduced or initially delivered for introduction into interstate commerce. Acetic acid, which had been listed solely in § 310.545, was now listed in § 310.545(a)(15)(i), with the same effective date of May 7, 1991. This final rule did not affect the conclusion reached in the 1990 and 1995 final rules that acetic acid was not generally recognized as safe and effective for the prevention of swimmer's ear or for the drying of water-clogged ears. The phrase ''approved as of May 7, 1991'' in § 310.545(a)(15)(i) indicates when this conclusion became effective for acetic acid.

Subsequently, a drug manufacturer submitted new data (Ref. 1) to support the use of a product containing 95 percent isopropyl alcohol in a 5 percent anhydrous glycerin base for drying water-clogged ears. The agency determined that the data supported the use of this product for drying water-clogged ears (Ref. 2). Accordingly, in the **Federal Register** of August 16, 1995 (60 FR 42435), the agency issued a partial stay of the August 15, 1995, effective date for § 310.545(a)(15)(ii) for products containing 95 percent isopropyl alcohol in a 5 percent anhydrous glycerin base used for the drying of water-clogged ears. This partial stay applied only to products with these ingredients for drying water-clogged ears. The new data and the stay did not involve other ingredients, such as acetic acid, and did not pertain to the prevention of swimmer's ear.

The agency is lifting the partial stay of the August 15, 1995, effective date of certain provisions of the regulations for topical otic drug products for the drying of water clogged ears. The August 15, 1995, effective date for § 310.545(a)(15)(ii) remains in effect for the listed ingredients when used in topical otic drug products for the prevention of swimmer's ear.

In the **Federal Register** of August 17, 1999 (64 FR 44671), the agency published a proposed amendment of the monograph for OTC topical otic drug products to add conditions for marketing products with isopropyl alcohol and anhydrous glycerin for drying water-clogged ears. The proposal contained labeling in the new OTC drug format in § 201.66 (21 CFR 201.66). Concurrently, the agency proposed to remove the drying of water-clogged ears from one part of § 310.545(a)(15) by revising the headings of paragraphs (a)(15), (a)(15)(i), and (a)(15)(ii).

Interested persons were invited to submit comments on the proposal and on the agency's economic impact determination by November 15, 1999. The agency did not receive any comments in response to the proposal.

II. The Agency's Final Conclusions

The agency concludes that a product consisting of isopropyl alcohol 95 percent in an anhydrous glycerin 5 percent base is generally recognized as safe and effective for OTC use for the drying of water-clogged ears and that such a product is not misbranded when it contains the labeling in new § 344.52 and is consistent with § 330.1 (21 CFR 330.1). No other product or ingredient has been found to be generally recognized as safe and effective for this use.

Existing part 344 currently includes only topical otic drug products used as earwax removal aids. The current headings for §§ 344.10 and 344.50 refer to a topical otic active ingredient and labeling of topical otic drug products, respectively. Accordingly, §§ 344.10 and 344.50 are changed to ''Earwax removal aid active ingredient'' and ''Labeling of earwax removal aid drug products,'' respectively. The agency is including new §§ 344.12 and 344.52 as ''Ear drying aid active ingredient,'' and ''Labeling of ear drying aid drug products,'' respectively. The agency is deleting § 344.50(e), which refers to substitution of the word ''physician'' for the word ''doctor,'' because this is now included in § 330.1(i)(23). The agency is listing the flammability warning in § 344.52(c) in § 201.66(c)(5)(ii)(C).

III. Analysis of Impacts

FDA has examined the impacts of the final rule under Executive Order 12866 and the Regulatory Flexibility Act (5 U.S.C. 601–612) (as amended by subtitle D of the Small Business Regulatory Fairness Act of 1996 (Public Law 104–121)), and the Unfunded Mandates Reform Act of 1995 (Public Law 104–4.). Executive Order 12866 directs agencies to assess all costs and benefits of available regulatory alternatives and, when regulation is necessary, to select regulatory approaches that maximize net benefits (including potential economic, environmental, public health and safety, and other advantages; distributive impacts; and equity). Under the Regulatory Flexibility Act, if a rule has a significant economic impact on a substantial number of small entities, an agency must analyze regulatory options that would minimize any significant impact of the rule on small entities. Title II of the Unfunded Mandates Reform Act requires that agencies

prepare a written statement and economic analysis before proposing any rule that may result in an expenditure in any one year by State, local, and tribal governments, in the aggregate, or by the private sector, of $100 million (adjusted annually for inflation).

The agency concludes that this final rule is consistent with the principles set out in the Executive Order and in these two statutes. The final rule is not a significant regulatory action as defined by the Executive Order and so is not subject to review under the Executive Order. FDA has determined that the final rule does not have a significant economic impact on a substantial number of small entities. Further, since this final rule makes no mandates on government entities and will result in expenditures less than $100 million in any one year, FDA need not prepare additional analyses under the Unfunded Mandates Reform Act.

The purpose of this final rule is to establish conditions for OTC drug products containing alcohol and glycerin used to dry water-clogged ears. This final rule amends the final monograph for OTC topical otic drug products and will require some product relabeling. The agency's Drug Listing System identifies only one manufacturer/marketer of one stockkeeping unit (SKU) (individual product, package, and size) of OTC topical otic drug products with these ingredients for drying water-clogged ears. There may be other manufacturers/marketers not identified in sources FDA reviewed, but the agency believes there are a limited number.

The agency believes that relabeling costs of the type required by this final rule generally average about $2,000 to $3,000 per SKU. Assuming there could be as many as five affected OTC SKU's in the marketplace, total one-time costs of relabeling would be $10,000 to $15,000. The agency believes that the actual cost could be lower for several reasons.

First, the labeling in the monograph is in the new OTC drug labeling format found in § 201.66. Therefore, manufacturers will not incur any expenses determining how to state the product's labeling. Second, manufacturers will be able to incorporate product labeling changes required by the final monograph and the new general OTC drug labeling requirements at one time. Thus, the relabeling costs resulting from two different but related final rules will be individually reduced by implementing both required changes at the same time, thereby reducing the labeling cost of this final rule.

Third, the one identified manufacturer/marketer is a small entity using the U.S. Small Business Administration designations for this industry (750 employees). The agency believes that any other unidentified manufacturer of these products is probably also a small entity. Small entities tend to use simpler and less expensive labeling. In addition, based on the limited number of SKU's (usually only one) each manufacturer has to relabel, the cost for each manufacturer should be minimal. Finally, the final rule will not require any new reporting and recordkeeping activities. Thus, no additional professional skills are needed.

The agency rejected an exemption for small entities because the new labeling information is also needed by consumers who purchase products marketed by those entities. However, a longer effective date until May 17, 2003, is being provided for products with annual sales less than $25,000.

For the reasons stated above and under the Regulatory Flexibility Act (5 U.S.C. 605(b)), the Commissioner certifies that this rule will not have a significant economic impact on a substantial number of small entities.

IV. Paperwork Reduction Act of 1995

FDA concludes that the labeling requirements in this final rule are not subject to review by the Office of Management and Budget because they do not constitute a ''collection of information'' under the Paperwork Reduction Act of 1995 (44 U.S.C. 3501 *et seq.*). Rather, the labeling requirements are a ''public disclosure of information originally supplied by the Federal Government to the recipient for the purpose of disclosure to the public'' (5 CFR 1320.3(c)(2)).

V. Environmental Impact

The agency has determined under 21 CFR 25.31(a) that this action is of a type that does not individually or cumulatively have a significant effect on the human environment. Therefore, neither an environmental assessment nor an environmental impact statement is required.

VI. References

The following references are on display in the Dockets Management Branch (HFA–305), Food and Drug Administration, 5630 Fishers Lane, rm. 1061, Rockville, MD 20852, and may be seen by interested persons between 9 a.m. and 4 p.m., Monday through Friday.

1. Comment No. CP1, Docket No. 77N–334S, Dockets Management Branch.

2. Letter from W. E. Gilbertson, FDA, to N. Buc, Buc Levitt & Beardsley, attorneys for Del Pharmaceuticals, Inc., coded LET13, Docket No. 77N–334S, Dockets Management Branch.

List of Subjects

21 CFR Part 201

Drugs, Labeling, Reporting and recordkeeping requirements.

21 CFR Part 310

Administrative practice and procedure, Drugs, Labeling, Medical devices, Reporting and recordkeeping requirements.

21 CFR Part 344

Labeling, Over-the-counter drugs.

Therefore, under secs. 201–907 of the Federal Food, Drug, and Cosmetic Act and under authority delegated to the Commissioner of Food and Drugs, the partial stay for § 310.545(a)(15)(ii) for topical otic drug products for the drying of water-clogged ears that published in the **Federal Register** of August 16, 1995 (60 FR 42436), is lifted effective September 11, 2000, and 21 CFR parts 201, 310, and 344 are amended as follows:

PART 201—LABELING

1. The authority citation for 21 CFR part 201 continues to read as follows:

Authority: 21 U.S.C. 321, 331, 351, 352, 353, 355, 358, 360, 360b, 360gg–360ss, 371, 374, 379e; 42 U.S.C. 216, 241, 262, 264.

2. Section 201.66 is amended by revising paragraph (c)(5)(ii)(C) to read as follows:

§ 201.66 Format and content requirements for over-the-counter (OTC) drug product labeling.

* * * * *

(c) * * *

(5) * * *

(ii) * * *

(C) Flammability warning, with appropriate flammability signal word(s) (e.g., §§ 341.74(c)(5)(iii), 344.52(c), 358.150(c), and 358.550(c) of this chapter). This warning shall follow a subheading containing the appropriate flammability signal word(s) described in an applicable OTC drug monograph or approved drug application.

* * * * *

PART 310—NEW DRUGS

3. The authority citation for 21 CFR part 310 continues to read as follows:

Authority: 21 U.S.C. 321, 331, 351, 352, 353, 355, 360b–360f, 360j, 361(a), 371, 374, 375, 379e; 42 U.S.C. 216, 241, 242(a), 262, 263b–263n.

4. Section 310.545 is amended by revising the headings of paragraphs (a)(15) and (a)(15)(i), and by revising paragraph (a)(15)(ii) to read as follows:

§ 310.545 Drug products containing certain active ingredients offered over-the-counter (OTC) for certain uses.

(a) * * *

(15) *Topical otic drug products*—(i) *For the prevention of swimmer's ear and for the drying of water-clogged ears, approved as of May 7, 1991.*

* * * * *

(ii) *For the prevention of swimmer's ear, approved as of August 15, 1995.*

Glycerin and anhydrous glycerin

Isopropyl alcohol

* * * * *

PART 344—TOPICAL OTIC DRUG PRODUCTS FOR OVER-THE-COUNTER HUMAN USE

5. The authority citation for 21 CFR part 344 continues to read as follows:

Authority: 21 U.S.C. 321, 351, 352, 353, 355, 360, 371.

6. Section 344.3 is amended by adding paragraphs (c) and (d) to read as follows:

§ 344.3 Definitions.

* * * * *

(c) *Water-clogged ears.* The retention of water in the external ear canal, thereby causing discomfort and a sensation of fullness or hearing impairment.

(d) *Ear drying aid.* A drug used in the external ear canal to help dry water-clogged ears.

7. Section 344.10 is amended by revising the section heading to read as follows:

§ 344.10 Earwax removal aid active ingredient.

* * * * *

8. Section 344.12 is added to subpart B to read as follows:

§ 344.12 Ear drying aid active ingredient.

The active ingredient of the product consists of isopropyl alcohol 95 percent in an anhydrous glycerin 5 percent base.

9. Section 344.50 is amended by revising the section heading and by removing paragraph (e) to read as follows:

§ 344.50 Labeling of earwax removal aid drug products.

* * * * *

10. Section 344.52 is added to subpart C to read as follows:

§ 344.52 Labeling of ear drying aid drug products.

(a) *Statement of identity.* The labeling of the product contains the established name of the drug, if any, and identifies the product as an ''ear drying aid.''

(b) *Indications.* The labeling of the product states, under the heading ''Use,'' the following: ''dries water in the ears'' (optional, which may be followed by: ''and relieves water-clogged ears'') (which may be followed by any or all of the following: ''after: [bullet] [1] swimming [bullet] showering [bullet] bathing [bullet] washing the hair''). Other truthful and nonmisleading statements, describing only the indications for use that have been established and listed in paragraph (b) of this section, may also be used, as provided in § 330.1(c)(2) of this chapter, subject to the provisions of section 502 of the Federal Food, Drug, and Cosmetic Act (the act) relating to misbranding and the prohibition in section 301(d) of the act against the introduction or delivery for introduction into interstate commerce of unapproved new drugs in violation of section 505(a) of the act.

(c) *Warnings.* The labeling of the product contains the following warnings under the heading ''Warnings'':

(1) ''Flammable [in bold type]: Keep away from fire or flame.''

(2) ''Do not use [in bold type] in the eyes.''

(3) ''Ask a doctor before use if you have [in bold type] [bullet] ear drainage or discharge [bullet] pain, irritation, or rash in the ear [bullet] had ear surgery [bullet] dizziness.''

(4) ''Stop use and ask a doctor if [in bold type] irritation (too much burning) or pain occurs.''

(d) *Directions.* The labeling of the product contains the following statement under the heading ''Directions'': [optional, bullet] ''apply 4 to 5 drops in each affected ear.''

Dated: July 31, 2000.

Margaret M. Dotzel,

Associate Commissioner for Policy.

[FR Doc. 00–19992 Filed 8–9–00; 8:45 am]

BILLING CODE 4160–01–F

[1] See § 201.66(b)(4) of this chapter.

DEPARTMENT OF TRANSPORTATION

National Highway Traffic Safety Administration

23 CFR Part 1335

[Docket No. NHTSA–98–4532]

RIN 2127–AH43

State Highway Safety Data and Traffic Records Improvements

AGENCY: National Highway Traffic Safety Administration (NHTSA), Department of Transportation.

ACTION: Final rule.

SUMMARY: This document adopts as a final rule the regulations that were published in an interim final rule to implement a new program established by the Transportation Equity Act for the 21st Century (TEA–21), with modifications to clarify the program's maintenance of effort requirement. Under the final rule, States can qualify for incentive grant funds for improved highway safety data and traffic records systems if they meet the eligibility requirements.

DATES: This final rule becomes effective on September 11, 2000.

FOR FURTHER INFORMATION CONTACT: Ms. Wendi Wilson-John, Office of State and Community Services, NSC–01, National Highway Traffic Safety Administration, 400 Seventh Street, SW, Washington, DC 20590, telephone (202) 366–2121; or Ms. Heidi L. Coleman, NCC–30, NHTSA, 400 Seventh Street, SW., Washington, DC 20590; telephone (202) 366–1834.

SUPPLEMENTARY INFORMATION: The Transportation Equity Act for the 21st Century (TEA–21) was signed into law on June 9, 1998, as Public Law 105–178. Section 2005 of TEA–21 established a new Section 411, entitled State Highway Safety Data Improvements, in Title 23, United States Code (Section 411). Under this new program, States may qualify for incentive grant funds by adopting and implementing effective highway safety data and traffic records improvement programs that meet specified statutory criteria.

Components Required by Section 411

Section 411 provides that a State's highway safety data and traffic records system should have three basic components, all of which must be present if the State is to receive multiple-year grants: a committee to coordinate the development and use of highway safety data and traffic records; a systematic assessment of the State's highway safety data and traffic records;

and a strategic plan for the continued improvement of highway safety data and traffic records.

Types of Grant

Section 411 anticipated that some States may not be able to meet all three prerequisites in the first or even the second year of the Section 411 program. The statute further anticipated that the strategic plan would be the most complex, and the most time-consuming, prerequisite to meet.

Accordingly, the section provided for three types of grants: a ''start-up'' grant, in the amount of $25,000, to each State that is not eligible for the other grants, provided that the State certifies that it will use the grant to meet the requisite components in the following year; an ''initiation'' grant, in the amount of $125,000, to each State that has established a coordinating committee, has performed or updated an assessment within the last five years, and has initiated the development of a strategic plan; and an ''implementation'' grant, in the amount described below, to each State that has established a coordinating committee, has performed or updated an assessment within the last five years, and has developed a strategic plan.

Section 411 provided that the first two types of grants would be available for one year only, and that the third grant would be available for multiple years. In accordance with the statute, a State that initially qualifies for a start-up grant may qualify for an initiation or an implementation grant in a subsequent fiscal year, if the State meets the criteria for these types of grants. A State that qualifies for an initiation or an implementation grant in any fiscal year may receive only implementation grants in subsequent fiscal years.

Section 411 provides that the amount of funds a State receives for an implementation grant is determined by a formula. The amount is determined by multiplying the amount appropriated to carry out 23 U.S.C. 411 by the ratio that the funds apportioned to the State under 23 U.S.C. 402 for fiscal year 1997 bears to the funds apportioned to all States under 23 U.S.C. 402 for fiscal year 1997, with the following exceptions. If the State has not received an initiation or an implementation grant under the Section 411 program in a previous fiscal year, the State shall receive no less than $250,000. If the State has received either of these two grants under the Section 411 program in a previous fiscal year, the State shall receive no less than $225,000.

All grant amounts are subject to the availability of funds.

Limitations on Grant Amounts

Section 411 provided that no State may receive a grant in more than six fiscal years, and a total of $32 million was authorized for the Section 411 program over a period of four years. Specifically, TEA–21 authorized $5 million for fiscal year 1999, $8 million for fiscal year 2000, $9 million for fiscal year 2001, and $10 million for fiscal year 2002. Funds may be used by States only to adopt and implement improvements to their highway safety data and traffic records programs.

Under Section 411, States are required to match the grant funds they receive as follows: the Federal share cannot exceed 75 percent of the cost of implementing the highway safety data and traffic records programs adopted to qualify for these funds in the first and second fiscal years the State receives funds; 50 percent in the third and fourth fiscal years it receives funds; and 25 percent in the fifth and sixth fiscal years.

Interim Final Rule

On October 8, 1998, NHTSA published an interim final rule in the **Federal Register** to implement the Section 411 program. 63 FR 54044. The interim final rule described the criteria States must meet and the procedures States must follow to qualify for funding under the Section 411 program.

Eligibility Criteria

The interim final rule provided that, to qualify for an implementation grant, a State must demonstrate that it has established a coordinating committee, completed or updated an assessment within the five years preceding the date of its application, and developed a strategic plan.

To qualify for an initiation grant, a State need not demonstrate that it has developed a strategic plan, but must demonstrate that it has established a coordinating committee, completed or updated an assessment within the five years preceding the date of its application, and initiated the development of a strategic plan. In addition, a State may qualify for an initiation grant only if it has not received an initiation or an implementation grant under this part in a previous fiscal year.

Any State that is not eligible for an initiation or an implementation grant, and has not received any grant under the Section 411 program in a previous fiscal year can qualify for a start-up grant, in accordance with the interim final rule.

A more detailed discussion of these criteria is contained in the interim final rule.

Application Procedures

The interim final rule stated that, to receive a grant in any fiscal year, the State must submit an application to NHTSA, through the appropriate NHTSA Regional Administrator, which demonstrates that the State meets the requirements of the grant being requested. The State also must submit the documentation listed in the regulation, including such items as a certification that the State will use the funds awarded only for the improvement of highway safety data and traffic records programs and a certification that the State will administer the funds in accordance with relevant regulations and OMB Circulars.

Further details regarding these procedures were described in the interim final rule.

Request for Comments

NHTSA requested comments from interested persons regarding the interim final rule. Comments were due by December 7, 1998. The agency stated in the interim final rule that all comments submitted to the docket would be considered and that, following the close of the comment period, NHTSA would publish a document in the **Federal Register** responding to the comments and, if appropriate, would make revisions to the provisions of Part 1335.

Comments Received

The agency received five comments in response to the interim final rule. Comments were received from: K. Craig Allred, Director of the Utah Highway Safety Office and Chair of the National Association of Governors' Highway Safety Representatives (NAGHSR); Jo Ann Moore, Manager of the Idaho Office of Highway Safety for the State of Idaho Transportation Department (Idaho); Betty J. Mercer, Division Director of the Office of Highway Safety Planning for Michigan's Department of State Police (Michigan); Charles W. Heald, P.E., Executive Director of the Texas Department of Transportation (Texas); and Richard L. Hannerman, President of the Salt Institute (Salt Institute).

General Comments

In general, the comments received in response to the interim final rule were positive. Some of the commenters indicated that they believe it is important for States to have accurate and complete highway safety data and traffic records, and they expressed their appreciation that Congress has established this incentive grant program.

The State of Michigan, for example, stated, ''Traffic records data is the

backbone of an effective and efficient state highway safety program. Timely and accurate data is essential for both problem identification and program evaluation. Michigan appreciates the recognition that Congress has given to this critical highway safety component by making funding available to implement essential improvements to the state highway safety data and traffic records program.'' NAGHSR stated, ''The grant program will provide a small but significant incentive to states to improve their state data systems through a comprehensive, planned approach.''

Other commenters provided general support for the contents of the interim final rule. The Salt Institute, for example, ''wholeheartedly endorse[d] the NHTSA conclusion that an effective highway safety program ''must include a process that identifies highway safety programs, develops measures to address the problems, implements the measures, and evaluates the results' and that this demands and 'depends on the availability of highway safety data and traffic records.' '' In addition, the Salt Institute stated that it ''is pleased to endorse the data elements included in the interim final rule specifying the requirements on states to receive highway safety incentive grants for their safety data and traffic records.'' NAGHSR stated that, ''In general, NAGHSR supports the proposed interim regulations and believes that they are reasonable.''

Some of the commenters suggested that certain limited modifications should be made to the interim final rule, and Michigan stated, ''it is our hope that the implementing regulations will be modified so that they do not deter the states from being able to take full advantage of this very needed funding source.''

The specific modifications that these commenters proposed and the agency's response to those comments are discussed in detail below. The agency notes, however, that the interim regulations did not deter the States from taking advantage of the Section 411 program. A total of $4,806,900 in grants were distributed to 54 jurisdictions (47 States, the District of Columbia, Puerto Rico, 4 U.S. Territories and the Bureau of Indian Affairs) under this program in FY 1999, and a total of $7,600,000 in grants were distributed to 46 jurisdictions (42 States, Puerto Rico and 3 U.S. Territories) under Section 411 in FY 2000.

Specific Comments

1. Establish a Coordinating Committee

In Section 411, Congress outlined the criteria that States must meet to qualify for incentive grants under this program. Under one of these criteria, States must have ''established a highway safety data and traffic records coordinating committee with a multi-disciplinary membership, including the administrators, collectors, and users of such data (including the public health, injury control, and motor carrier communities).'' Section 411 provides also that States must submit their highway safety data and traffic records strategic plans to the coordinating committee for approval.

The interim final rule provided that, to qualify for either an initiation or an implementation grant, States must have established a coordinating committee that meets certain requirements. Specifically, the committee must be made up of members drawn from the agencies and organizations throughout the State that administer, collect and use highway safety data and traffic records and have certain enumerated powers, including the authority to review any of the State's highway safety data and traffic records systems and to review changes to those systems before the changes are implemented.

The agency received comments from NAGHSR, Michigan and Texas, objecting to these requirements. Michigan's comments on this subject are both comprehensive and representative of the others received.

Michigan stated, ''The Committee is a very diverse group, the actual authority to operate the system most likely lies with one of the key agencies on the Committee. The law requires only that the Committee 'continue to operate and support the multi-year plan.' It is more appropriate and realistic to require that the Coordinating Committee review and makes recommendations on the strategic plan but not necessarily have direct authority to approve it.''

Michigan continues, ''To require the Committee to have the authority to review the state highway safety data and traffic records system and changes to the system prior to implementation is impractical and unnecessary. Michigan has had a traffic records coordinating committee for many years. The state long recognized that to have an effective program the key agencies with an interest in the data must work collaboratively. * * * Authority for any specific segment of the traffic records system, however, rests with the state agency responsible for that particular segment.'' [Emphasis in text.]

Similarly, NAGHSR opposed the ''expanded role'' that the interim regulation seems to envision for the coordinating committee, and Texas expressed its belief that ''such a formal committee * * * with such broad control over state agency operations'' should not be required.

As stated previously, the statutory language in Section 411 requires that States must submit their highway safety data and traffic records strategic plans to the coordinating committee for approval. The agency believes that the portion of the interim final rule which provides that the coordinating committee must have the authority to review the State's highway safety data and traffic records systems and to review changes to those systems before the changes are implemented is necessary to implement this statutory requirement properly.

If a coordinating committee did not have this authority, the agency believes there would be no assurance that the improvements identified in the plan that need to be made will in fact be carried out. In addition, NHTSA expects that these strategic plans will be ''living documents,'' which may need to be altered on a continuous basis to take into account the amount of progress that has (or has not) been made and any other changes in circumstances. The agency believes that, by including the coordinating committee in the review process in this way, the committee will remain more fully informed about the State's progress in implementing the strategic plan and about other circumstances as they unfold, which will enable the committee to make adjustments to the plan, if they are needed. Accordingly, this portion of the final rule has been adopted without change.

NAGHSR also asserted in its comments that, in some regions, ''states are being actively encouraged to require state agency members of the coordinating committee to sign a joint Memorandum of Understanding (MOU) * * * [which] would give formal approval authority to the coordinating committee over the state data plan.'' NAGHSR states that this suggestion would be problematic for some State agencies, and suggests that it should be discontinued.

The agency acknowledges that, when some States inquired about the manner in which a State could document that they had the authority mentioned above, some of the agency's regional staff suggested to these States that they could document the authority in a Memorandum of Understanding (MOU). The agency did not mean to suggest,

however, that this was a necessary requirement. As provided in the interim final rule, to demonstrate compliance with the Section 411 criterion that States must establish a coordinating committee, States need only certify that the State ''has established a coordinating committee, and include the name, title and organizational affiliation of each member of'' that committee. State coordinating committees may enter into MOU's if they wish, but this is not a prerequisite to Section 411 compliance.

2. Complete or Update an Assessment

One of the other criteria established by Congress in Section 411 is the requirement that States must have ''completed, within the preceding 5 years, a highway safety data and traffic records assessment or an audit of the highway safety data and traffic records system of the State.''

The interim final rule provided that, to qualify for either an initiation or an implementation grant, States must have completed or updated an assessment within the five years preceding the date of the State's application and, further, it provided that the assessment must meet certain requirements.

Specifically, the interim regulations required that the assessment must be an in-depth, formal review of the State's highway safety data and traffic records system; that it generate an impartial report of the status of the system in the State; and that it be conducted by an organization or group that is knowledgeable about highway safety data and traffic records systems, but independent from the organizations involved in the administration, collection and use of these State systems.

In its comments, Texas objected to the requirement that the assessment must be conducted by an ''organization or group that is knowledgeable about highway safety data and traffic records systems.'' Texas expressed its belief that States ''should be given more latitude to select a consultant experienced in a wide range of disciplines such as business process re-engineering or information systems.'' According to Texas, ''Limiting these efforts to consultants and organizations experienced in crash records will adversely limit the type and number of firms that will be able to compete for these assessments.''

The agency would not object to any State's decision to involve in its assessment a consultant or group with experience in a wide range of disciplines, such as business process re-engineering or information systems. However, to qualify under the Section 411 criterion that States must complete or update an assessment, the organization or group conducting the assessment must also be knowledgeable about highway safety data and traffic records systems.

This portion of the final rule has also been adopted without change.

3. Initiate or Develop a Strategic Plan

Congress also provided, in Section 411, that States either must have ''initiated the development of a multi-year highway safety data and traffic records strategic plan'' that meets certain requirements or that they certify ''that the highway safety data and traffic records coordinating committee of the State continues to operate and supports the multi-year plan.''

The interim final rule provided that States must have initiated the development of a strategic plan to qualify for an initiation grant, and that States must have developed a strategic plan to qualify for an implementation grant. The interim regulation further provided that the strategic plan must be a multi-year plan that identifies and prioritizes the highway safety data and traffic records needs and goals based on the State's assessment, identifies performance-based measures by which progress toward those goals will be determined, and be submitted to the coordinating committee for approval.

Michigan stated, in its comments, that it would have no difficulty meeting the requirement that States must have a strategic plan, but Michigan asserted that this requirement might be difficult for some other States. No other State raised this objection.

Texas raised two questions concerning this criterion. The State asked whether the committee's approval of the plan commits State agencies to implement the plan and it asked how differences between plans of the coordinating committee and of the State agency would be resolved.

The interim regulations provide that, to qualify for an initiation grant, a State must certify that the State ''has established a coordinating committee'' and that it ''has initiated the development of a strategic plan, with the supervision and approval of the coordinating committee.'' A State must also certify that the State ''has established a coordinating committee'' to qualify for an implementation grant (if the State has not received an initiation or an implementation grant under this part in a previous fiscal year). In addition, to qualify for an implementation grant (whether or not the State has received an initiation or an implementation grant under this part in a previous fiscal year), a State must certify that ''the coordinating committee continues to operate and supports the strategic plan.''

The interim regulations do not require that the State submit any certifications or other information concerning the actions that State agencies must take as a result of the plan or the means of resolving issues that may arise between these agencies and the coordinating committee. It is up to each individual State to address these issues. NHTSA does not believe it is appropriate for it to dictate such matters to the States.

However, the States should note that, to qualify for an implementation grant (if the State has received an initiation or an implementation grant under this part in a previous fiscal year), a State must report on its progress in implementing the strategic plan since the State's previous application. If progress is not made in a State, due to a lack of commitment on the part of State, because of the presence of conflicts between these agencies and the coordinating committee, or for other reasons, the State's ability to receive Section 411 grant funds in subsequent years could be jeopardized.

No changes have been made to this portion of the final rule as a result of these comments.

4. Maintenance of Effort and Matching Requirements

In the provisions of Section 411, Congress provided for a maintenance of effort requirement. Specifically, Section 411 provides that, ''No grant may be made to a State under this section in any fiscal year unless the State enters into [an] agreement with the [the agency] * * * that the State will maintain its aggregate expenditures from all other sources for its highway safety data and traffic records programs at or above the average level of such expenditures in [fiscal years 1996 and 1997].''

Section 411 provides also for State matching requirements. Specifically, the statute provides that ''The Federal share of the cost of implementing and enforcing, as appropriate, in a fiscal year a program adopted by a State pursuant to [the Section 411 program] shall not exceed [75 percent] in the first and second fiscal years in which the State receives a grant under this section * * *; [50 percent] in the third and fourth fiscal years in which the State receives a grant under this section * * *; and [25 percent] in the fifth and sixth fiscal years * * *

The interim final rule incorporated all of these requirements into the interim regulations.

In its comments, Idaho raised two objections to these requirements. Regarding the maintenance of effort requirement, Idaho explained that it ''spent an abnormally large amount [of funds] on highway safety data and traffic records systems in [fiscal years 1996 and 1997] from special funding sources that are no longer available, thereby making it impossible to continue expenditures at this inflated level.''

According to Idaho, ''In fiscal year 1995, [it] received a one-time amount of $1.3 million [under the Section 153 transfer program] because the state did not have a universal motorcycle helmet law [and the State] used approximately 23 percent of those funds for highway safety data and traffic records system projects in fiscal years 1996 and 1997. As a result, expenditures for data-related initiatives in those two years, due to this ''windfall'' funding source, were among the highest on record for [the] agency.''

With all of the highway safety problems that the State must address, Idaho asserts that, ''It would be irresponsible [for Idaho] to include in [its] highway safety plans a 25 percent yearly expenditure of 402 funds on highway safety data or traffic records systems.'' Accordingly, Idaho requests that these Section 153 transfer funds not be considered as part of the baseline for the Section 411 maintenance of effort requirement.

The agency recognizes that, in fiscal years 1996 and 1997, some States expended usually large sums of money on their highway safety data and traffic records systems and that these sums were from special funding sources that are no longer available. In particular, many States experienced a transfer of funds in fiscal year 1995, under the Section 153 program, because they did not have in effect conforming motorcycle helmet or seat belt use legislation. Some of these States chose to use these funds to upgrade their highway safety data and traffic records systems and, in many cases, the funds that had been transferred in fiscal year 1995 were expended in fiscal years 1996 and 1997.

The agency believes that the maintenance of effort requirement contained in the Section 411 program was intended to ensure that States maintain their ordinary spending on their highway safety data and traffic records systems and that the funds they receive under the Section 411 program will supplement those expenditures and not replace them. The agency does not believe the requirement was intended to match special or unusual funding resources, such as the Section 153 transfer or other funds made available to States under Chapter 1 of Title 23 of the United States Code, some or all of which a State may choose to use also to supplement its ordinary spending in this area. The agency believes that the inclusion of these special funding sources in the maintenance of effort requirement would impose a hardship on the States and would not result in the most effective use of these resources.

Accordingly, the regulation has been modified to clarify that States must maintain their aggregate expenditures from all other sources, except those authorized under Chapter 1 of Title 23 of the United States Code, for their highway safety data and traffic records programs at or above the average level of such expenditures in fiscal years 1996 and 1997.

Regarding the matching requirements, Idaho observes that these requirements apply each year that a State receives a grant, whether the State receives an implementation, initiation or start-up grant, and Idaho asserts that ''it would be difficult for us to meet the higher match requirements in the third and subsequent years.'' Accordingly, Idaho recommends that the $25,000 start-up grant be excluded from the matching requirements and that these requirements apply instead only to initiation and implementation grants. Idaho asserts that this would assist Idaho and other small States.

The agency appreciates that, over the life of the program, it might be easier for some States to meet the matching requirements if those requirements were to apply only to initiation and implementation, and not to start-up grants. However, the statutory language in Section 411 states specifically that the various matching levels apply to fiscal years ''in which the State receives a grant under this section.'' The statute does not exclude any of the three types of grants that may be awarded. Accordingly, the agency will continue to apply the matching requirements to start-up, as well as to initiation and implementation, grants, and will not make any changes to this portion of the regulations.

The agency notes that the State of Idaho did not apply for a Section 411 start-up grant during FY 1999. It appears that the State decided instead to wait, and applied for and received an initiation grant in FY 2000. By following this course, Idaho was not subject to a matching requirement for the start-up funds that it spent on its data and traffic records system in FY 1999. In addition, the 75 percent Federal matching percentage was applied to the initiation grant that Idaho received in FY 2000 and will be applied also to the first implementation grant for which the State qualifies.

The agency would also like to remind the States that it will accept a ''soft'' match in Section 411's administration, as it has for the agency's Section 402 and 410 programs. By this, the agency means the State's share may be satisfied by the use of either allowable costs incurred by the State or the value of in-kind contributions applicable to the period to which the matching requirement applies. A State cannot, however, use any Federal funds, such as its Section 402 funds, to satisfy the matching requirements. In addition, a State can use each non-Federal expenditure only once for matching purposes.

Michigan also had a comment concerning the maintenance of effort requirement. To implement this requirement, the interim rule requires each State to certify that it will ''Maintain its aggregate expenditures from all other sources for highway safety data and traffic records programs at or above the average level of such expenditures in [State or] Federal fiscal years 1996 and 1997.'' Michigan explained that its funding for traffic records is appropriated by its State Legislature on an annual basis and, therefore, any certification as to the maintenance of expenditures at or above the average 1996 and 1997 level ''can only be based on current year funding levels.''

The agency understands Michigan's concern. To the extent that any State's plan covers years for which the State's legislature has not yet authorized funding, we recognize that the State agency's commitment to maintain its aggregate expenditures must be subject to the availability of funds.

5. Application Procedures

The interim regulations provide that, to be considered for a grant in any fiscal year, a State must submit an application that is ''received by the agency not later than January 15 of that fiscal year.'' Within 30 days of being informed by NHTSA that it is eligible for a grant, a State is required to submit a Program Cost Summary (HS Form 217) obligating the funds. The interim regulations also require the States to document how they intend to use the funds under this part in their Highway Safety Plans, which they submit pursuant to 23 CFR Part 1200.

Mr. Allred of Utah, who submitted comments on behalf of NAGHSR, raised several concerns regarding this portion of the interim regulations. In particular,

Mr. Allred asserted that, ''Unlike other grant programs, a state must satisfy a two-step approval process that is different than the process for the Section 402 program. The application deadline is different than other grant programs. The amount of time for federal review and approval is not specified which leaves approval rather open-ended. The deadline for submitting a spending plan is different than the prior October deadline for the annual Highway Safety Plan (HSP).''

To be consistent with the timetables followed in other NHTSA programs, Mr. Allred suggests that the application deadline should be changed instead to August 1. In addition, he suggests that the applications should include a spending plan, ''just as States must do under the 402 program,'' that NHTSA should decide which States qualify for funding under this program by September 1 and then obligate the Section 411 funds ''on October 1.''

When NHTSA was developing its interim final rules for the various grant programs authorized in TEA–21, we made a conscious decision to avoid establishing the same deadline for all of these programs. We believed that, if the States were required to submit and the agency was required to review all of these applications at the same time, the workload for both the agency and the States would be extraordinary. In addition, we were concerned about the risks of delay should all of these deadlines fall near the end of each fiscal year.

Under some of the grant programs, such as the Section 405 Occupant Protection and the Section 410 Impaired Driving Incentive Grant Programs, States must enact certain types of laws to qualify for funding. Accordingly, the agency established an August 1 deadline for these programs, to provide States with additional time to enact conforming legislation.

However, State compliance with the Section 411 incentive grant program is not dependent on the enactment of legislation. Moreover, the agency believed it had established a grant application process that was relatively simple and straight-forward to follow. Accordingly, we believed that, with the publication of an interim final rule on October 8, 1998, that States would be able to submit applications for funding by the following January 15. For all of these reasons, the interim regulations established a January 15 deadline for the receipt of applications under this program.

The agency believes that the January 15 deadline has not been a limiting factor for the States. For example, in the first year of the program (the year in which the deadline would have been most likely to have had a negative impact), the agency received and approved applications from 54 jurisdictions (47 States, the District of Columbia, Puerto Rico, 4 U.S. Territories and the Bureau of Indian Affairs). In addition, this ''early'' application deadline permitted the agency to make early releases of Section 411 grant funds. In FY 1999, the Section grant funds were awarded in March of 1999 and, in FY 2000, these grant funds were awarded in March of 2000. We expect that Section 411 grant funds will continue to be released in future fiscal years on a similar timetable.

Regarding Mr. Allred's comment that the interim regulations require States to ''satisfy a two-step approval process that is different than the process for the Section 402 program,'' we believe this reference is to the provisions of the interim regulations that require that, ''Within 30 days of being informed by NHTSA that it is eligible for a grant, a State shall submit to the agency a Program Cost Summary (HS Form 217) obligating the funds under this part to highway safety data and traffic records programs,'' and that ''The State shall document how it intends to use the funds under this part in the Highway Safety Plan it submits pursuant to 23 CFR Part 1200.''

We note that States may meet these requirements in two separate steps or they may choose to meet both of these requirements at once. The agency believes this should not be difficult for States to do, especially when applying for subsequent year grants. Accordingly, no changes are being made to the regulation as a result of this comment.

6. MMUCC

In subsection (a)(2) of Section 411, Congress stated that, ''The Secretary, in consultation with States and other appropriate parties, shall determine the model data elements necessary to observe and analyze national trends in crash occurrences, rates, outcomes, and circumstances.''

In the interim final rule, NHTSA indicates that, it has determined that the Model Minimum Uniform Crash Criteria (MMUCC) serve the purposes of the law and has defined ''model data elements'' to mean the elements specified in the MMUCC. While conformity to the MMUCC is not required for grant eligibility under Section 411, the agency strongly encouraged States in the interim final rule to employ the criteria in their highway safety data and traffic records systems, and to consider these criteria when conducting their assessments and developing their strategic plans.

In its comments, the Salt Institute recommends a change to the MMUCC, related to data element C13 ''Road Surface Condition.''

The agency notes that the Salt Institute's recommended change to the MMUCC is beyond the scope of this rulemaking action. As explained in the interim final rule, the MMUCC is a minimum set of crash data elements with standardized definitions that are relevant to injury control, and highway and traffic safety. Its use is encouraged to help States reduce the collection and processing burden of motor vehicle crash data.

The MMUCC was developed collaboratively. The effort to develop the MMUCC involved private and public safety, engineering, transportation and research experts from the local, State and Federal levels, and drafts of the data set were distributed for comment to national, State and local associations, representing highway traffic safety, injury control, emergency medical services, State health departments and others, and to the general public via the World Wide Web. The final version of the MMUCC was prepared by an expert panel, which considered the feedback it received at meetings and by mail, fax, telephone and electronic communication. The effort was supported by the National Association of Governors' Highway Safety Representatives (NAGHSR), with assistance from NHTSA and the FHWA.

Any decisions regarding the contents of the MMUCC would need to be considered through separate proceedings.

Regulatory Analyses

Executive Order 12778 (Civil Justice Reform)

This final rule will not have any preemptive or retroactive effect. The enabling legislation does not establish a procedure for judicial review of rules promulgated under its provisions. There is no requirement that individuals submit a petition for reconsideration or other administrative proceedings before they may file suit.

Executive Order 12866 (Regulatory Planning and Review) and DOT Regulatory Policies and Procedures

The agency has examined the impact of this action and has determined that it is not significant under Executive Order 12866 and the Department of Transportation's Regulatory Policies and Procedures.

The action will not have an annual effect on the economy of $100 million

or more or adversely affect in a material way a sector of the economy, competition, jobs, the environment, public health or safety, or State, local or tribal governments or communities. It will not create a serious inconsistency or otherwise interfere with an action taken or planned by another agency, and it will not materially alter the budgetary impact of entitlements, grants, user fees, or loan programs or the rights and obligations of recipients thereof. Nor does it raise novel legal or policy issues.

Regulatory Flexibility Act

In compliance with the Regulatory Flexibility Act (Pub. L. 96–354, 5 U.S.C. 601–612), the agency has evaluated the effects of this action on small entities. Based on the evaluation, the agency certifies that this action will not have a significant impact on a substantial number of small entities. States are the recipients of any funds awarded under the Section 411 program, and they are not considered to be small entities, as that term is defined under the Regulatory Flexibility Act.

Paperwork Reduction Act

The requirements relating to the regulations that this rule is amending that States retain and report to the Federal government information which demonstrates compliance for incentive grant funds for improved highway safety data and traffic records systems, are considered to be information collection requirements, as that term is defined by the Office of Management and Budget (OMB) in 5 CFR Part 1320.

Accordingly, these requirements have been submitted and approved by OMB, pursuant to the Paperwork Reduction Act (44 U.S.C. 3501 *et seq.*). These requirements have been approved through June 30, 2003, under OMB No. 2127–0606.

National Environmental Policy Act

The agency has analyzed this action for the purpose of the National Environmental Policy Act of 1969 (42 U.S.C. 4321 *et seq.*) and have determined that it will not have any significant impact on the quality of the human environment.

The Unfunded Mandates Reform Act

The Unfunded Mandates Reform Act of 1995 (Public Law 104–4) requires agencies to prepare a written assessment of the costs, benefits and other affects of final rules that include a Federal mandate likely to result in the expenditure by State, local or tribal governments, in the aggregate, or by the private sector, of more than $100 million annually. This final rule does not meet the definition of a Federal mandate, because the resulting annual expenditures will not exceed the $100 million threshold. In addition, this incentive grant program is completely voluntary and States that choose to apply and qualify will receive incentive grant funds.

Executive Order 12612 (Federalism)

This action has been analyzed in accordance with the principles and criteria contained in Executive Order 12612, and it has been determined that this action will not have sufficient federalism implications to warrant the preparation of a Federalism Assessment. Accordingly, a Federalism Assessment has not been prepared.

List of Subjects in 23 CFR Part 1335

Grant programs—transportation, Highway safety, Reporting and recordkeeping requirements.

In consideration of the foregoing, the interim final rule published in the **Federal Register** of October 8, 1998, 63 FR 54055, adding a new Part 1335 to chapter II of Title 23 of the Code of Federal Regulations, is adopted as final, with the following changes:

PART 1335—STATE HIGHWAY SAFETY DATA IMPROVEMENTS

1. The authority citation for Part 1335 continues to read as follows:

Authority: 23 U.S.C. 411; delegation of authority at 49 CFR 1.50.

2. Section 1335.12 is amended by revising paragraph (d)(3) to read as follows:

§ 1335.12 Contents of application.

* * * * *

(d) * * *

(3) Maintain its aggregate expenditures from all other sources, except those authorized under Chapter 1 of Title 23 of the United States Code, for highway safety data and traffic records programs at or above the average level of such expenditures in Federal fiscal years 1996 and 1997 (either State or federal fiscal year 1996 and 1997 can be used).

Issued on: August 7, 2000.

Rosalyn G. Millman,

Deputy Administrator, National Highway Traffic Safety Administration.

[FR Doc. 00–20339 Filed 8–9–00; 8:45 am]

BILLING CODE 4910–59–P

DEPARTMENT OF DEFENSE

Office of the Secretary

32 CFR Part 199

Civilian Health and Medical Program of the Uniformed Services (CHAMPUS); Expansion of Dependent Eligibility for TRICARE Retiree Dental Program

AGENCY: Office of the Secretary, DoD.

ACTION: Final rule.

SUMMARY: This final rule implements a change to the TRICARE Retiree Dental Program (TRDP) required by the Strom Thurmond National Defense Authorization Act for Fiscal Year 1999. This change expands eligibility for enrollment in the program to allow dependents of certain retired members of the Uniformed Services to enroll in the program even if the retired member does not enroll. In addition, this rule clarifies the existing regulatory provisions for election of TRDP coverage and disenrollment.

EFFECTIVE DATE: This rule is effective August 10, 2000.

ADDRESSES: TRICARE Management Activity, 16401 East Centretech Parkway, Aurora, CO 80011–9043.

FOR FURTHER INFORMATION CONTACT: Linda Winter, TRICARE Management Activity, (303) 676–3682.

SUPPLEMENTARY INFORMATION:

Background and Legislative Changes

A. Congressional Action

Implementation of the TRICARE Retiree Dental Program (TRDP), a program completely funded by enrollee premiums, was directed by Congress in Section 703 of the National Defense Authorization Act for Fiscal Year 1997, Public Law 104–201, which amended Title 10, United States Code, by adding Section 1076c. Section 1076c was subsequently amended by the National Defense Authorization Act for Fiscal Year 1998 to expand eligibility to retirees of the Public Health Service and the National Oceanic and Atmospheric Administration and to surviving spouses and dependents of deceased active duty members. As amended, the law directs the implementation of a dental program for: (1) Members of the Uniformed Services who are entitled to retired pay, (2) members of the Retired Reserve who would be entitled to retired pay, but are under the age of 60, (3) eligible dependents of a member in (1) or (2) who are covered by the enrollment of the member, and (4) the unremarried surviving spouse and eligible child dependents of a deceased

member who died while in status described in (1) or (2); the unremarried surviving spouse and eligible child dependents who receive a surviving spouse annuity; or the unremarried surviving spouse and eligible child dependents of a deceased member who died while on active duty for a period of more than 30 days and whose eligible dependents are not eligible or no longer eligible for the Active Duty Dependents Dental Plan.

Eligibility of dependents (other than surviving spouses and dependents) for the TRDP was contingent on the enrollment of the retired member. This applied even in cases where the member could not benefit from TRDP coverage. In such cases, members had a choice of enrolling solely to obtain coverage for their dependents, or doing without the program altogether.

With regard to amending Section 1076c of Title 10 to rectify this situation, the House National Security Committee reported, ''Presently, dependents may enroll in the retiree dental program only if the retired member also enrolls. However, some retired members are entitled to receive dental care from the Department of Veterans Affairs or have medical or dental conditions which preclude their use of the dental program. The Committee believes it is not reasonable to ask these retirees to enroll in, and pay premiums for, a program which offers them no benefits only so their dependents may also enroll in the program. Therefore, this provision would allow the dependents of these specific retirees to enroll in the retiree dental program independently.''

Section 702 of the Strom Thurmond National Defense Authorization Act for Fiscal Year 1999, Public Law 105–261, addressed this situation by extending eligibility for the TRDP to eligible dependents of certain retired members who are *not* enrolled and whose benefit from enrollment would be severely limited at best. These are members who are enrolled with the Department of Veterans Affairs to receive dental care, members who are enrolled through employment in a dental plan that is not available to the member's dependents, and members who are prevented by a medical or dental condition from being able to use TRDP benefits.

B. Public Comments

The proposed rule was published in the **Federal Register** on December 1, 1999. No public comments were received.

II. Provisions of the Rule

Provisions of the Proposed Rule

The proposed rule extends eligibility for the TRDP to eligible dependents when the retired member is not enrolled because the member would not benefit from the program due to any of the three conditions stipulated in the law, which are, briefly, dental care from the Department of Veterans Affairs, employee-only dental coverage, or medical or dental condition which precludes dental care. To facilitate understanding and convey the intent of the law, the proposed rule mandates that each of these conditions must meet the test of being ongoing, long-term, or enduring as opposed to episodic, conditional, temporary, or short-term. The retired member's circumstance must be such that the benefits of the TRDP would not be useful currently and in the foreseeable future. This distinction is also necessary to help limit the potential for adverse selection and higher costs.

Given the absence of any systems of information that a member meets any of the three qualifying conditions, the proposed rule requires that retired members desiring to enroll their dependents under the dependent-only provision provide documentation attesting to the existence of these conditions. The documentation requirements are specified as being: (1) confirmation by the Department of Veterans Affairs of its authorization for the member's ongoing, comprehensive dental care, (2) confirmation by a member's employer or the employer's dental plan administrator that the member is enrolled in a dental plan through employment that is separate from the member's Uniformed Service, and the dental plan is not available to the member's dependents, or (3) confirmation by the member's physician or dentist of the member's inability to utilize TRDP benefits due to a current and enduring medical or dental condition. These criteria and documentation requirements were developed with the recognition that the three situations specified by Congress for allowing dependent-only enrollment represent exceptional circumstances.

The availability of dental care from the Department of Veterans Affairs is extremely limited. Sections 1710(c) and 1712 of title 38, United States Code, and sections 17.93, and 17.160 through 17.166 of title 38, Code of Federal Regulations specify the criteria which a veteran must meet to be considered for dental care. The policies and procedures for the Veterans Health Administration (VHA) Dental Program are covered in the VHA Directive 1130 (December 7, 1998) and the VHA Handbook 1130.1 (December 7, 1998).

The determinations of eligibility or authorization for dental care are not based simply on enrollment for health care from the Department of Veterans Affairs nor are such decisions recorded in a centralized system. These are accomplished by the Department of Veterans Affairs at local and regional levels. In general, entitlement to continuous, comprehensive dental benefits from the Department of Veterans Affairs is limited to those veterans who are in receipt of a compensable service connected dental rating, a 100% service connected rating, or a permanent and totally disabled (unemployable) rating, or who have been classified as former Prisoners of War (for at least 90 days). In most other cases, the dental care provided to eligible veterans is episodic and short-term.

Just as the dental care available from the Department of Veterans Affairs is limited, employee-only dental coverage is not prevalent in the health insurance industry according to sources at the Health Insurance Association of America and Delta Dental Plan of California. Similarly, expectations are that the prevalence of medical or dental conditions that would preclude any use for the coverage offered by the TRDP is relatively small.

The proposed rule prohibits retroactive dependent-only enrollments and requires that enrolled retirees satisfy any remaining enrollment commitment prior to enrolling dependents under the dependent-only provision. Once the initial enrollment commitment is fulfilled, retirees who meet one of the dependents-only eligibility conditions may disenroll with dependents remaining enrolled on a month-to-month basis.

Other Provisions of the Proposed Rule

In addition to implementing dependent-only eligibility, the proposed rule clarifies the process for electing to enroll in the TRDP by removing the apparently restrictive reference to written election, thereby recognizing the existence of the variety of methods in which an election of enrollment can be conveyed, e.g., by written, telephonic, or e-mailed application. The proposed rule also clarifies the 12-month enrollment lock-out provision by specifying that the provision applies to disenrollment occurring at any time and for any reason. This includes disenrollment after the enrollee has fulfilled the 24-month initial enrollment commitment and disenrollment of the

retired member to convert to dependent-only coverage.

Provisions of the Final Rule

The final rule is consistent with the proposed rule.

III. Rulemaking Procedures

Executive Order 12866 requires certain regulatory assessments for any ''significant regulatory action,'' defined as one that would result in an annual effect on the economy of $100 million or more, or have other substantial impacts.

The Regulatory Flexibility Act (RFA) requires that each federal agency prepare, and make available for public comment, a regulatory flexibility analysis when the agency issues a regulation which would have a significant impact on a substantial number of small entities.

This rule is not a significant regulatory action under the provisions of Executive Order 12866, and it would not have a significant impact on a substantial number of small entities.

This rule will not impose additional information collection requirements on the public under the Paperwork Reduction Act of 1995 (44 U.S.C. Chapter 35).

List of Subjects in 32 CFR Part 199

Claims, Health insurance, Individuals with disabilities, Military personnel, and Reporting and record keeping requirements.

Accordingly, 32 CFR part 199 is amended as follows:

PART 199—[AMENDED]

1. The authority citation for Part 199 continues to read as follows:

Authority: 5 U.S.C. 301; 10 U.S.C. Chapter 55.

2. Section 199.22 is amended by revising paragraphs (d)(1)(iii), (d)(3), and (d)(4); redesignating paragraph (d)(1)(iv) as paragraph (d)(1)(v); and adding a new paragraph (d)(1)(iv) to read as follows:

§ 199.22 TRICARE Retiree Dental Program (TRDP).

* * * * *

(d) * * *

(1) * * *

(iii) Eligible dependents of a member described in paragraph (d)(1)(i) or paragraph (d)(1)(ii) of this section who are covered by the enrollment of the member;

(iv) Eligible dependents of a member described in paragraph (d)(1)(i) or paragraph (d)(1)(ii) of this section when the member is not enrolled in the program and the member meets at least one of the conditions in paragraphs (d)(1)(iv)(A) through (C) of this section. Already enrolled members must satisfy any remaining enrollment commitment prior to enrollment of dependents becoming effective under this paragraph, at which time the dependent-only enrollment will continue on a voluntary, month-to-month basis as specified in paragraph (d)(4) of this section. Members must provide documentation to the TRDP contractor giving evidence of compliance with paragraphs (d)(1)(iv)(A), (B), or (C) of this section at the time of application for enrollment of their dependents under this paragraph.

(A) The member is enrolled under Section 1705 of Title 38, United States Code, to receive ongoing, comprehensive dental care from the Department of Veterans Affairs pursuant to Section 1712 of Title 38, United States Code, and 38 CFR 17.93, 17.161, or 17.166. Authorization of such dental care must be confirmed in writing by the Department of Veterans Affairs.

(B) The member is enrolled in a dental plan that is available to the member as a result of employment of the member that is separate from the Uniformed Service of the member, and the dental plan is not available to dependents of the member as a result of such separate employment by the member. Enrollment in this dental plan and the exclusion of dependents from enrollment in the plan must be confirmed by documentation from the member's employer or the dental plan's administrator.

(C) The member is prevented by a current and enduring medical or dental condition from being able to obtain benefits under the TRDP. The specific medical or dental condition and reason for the inability to use the program's benefits over time, if not apparent based on the condition, must be documented by the member's physician or dentist.

* * * * *

(3) Election of coverage. In order to initiate dental coverage, election to enroll must be made by the retired member or eligible dependent. Enrollment in the TRICARE Retiree Dental Program is voluntary and will be accomplished by submission of an application to the TRDP contractor.

(4) Enrollment periods. Initial enrollment shall be for a period of 24 months followed by month-to-month enrollment as long as the enrollee chooses to continue enrollment. An enrollee's disenrollment from the TRDP at any time for any reason is subject to a lock-out period of 12 months. After any lock-out period, eligible individuals may elect to reenroll and are subject to a new initial 24-month enrollment period.

* * * * *

July 31, 2000.

L.M. Bynum,

Alternate OSD Federal Register Liaison Officer, Department of Defense.

[FR Doc. 00–19863 Filed 8–9–00; 8:45 am]

BILLING CODE 5001–10–P

LIBRARY OF CONGRESS

Copyright Office

37 CFR Parts 201, 202, and 204

[Docket No. RM 2000–5B]

General Provisions and Privacy Act; Technical Amendments

AGENCY: Copyright Office, Library of Congress.

ACTION: Final rule; technical amendments.

SUMMARY: This document makes non-substantive, technical amendments to Copyright Office regulations.

EFFECTIVE DATE: August 10, 2000.

FOR FURTHER INFORMATION CONTACT: Sandra L. Jones, Writer Editor, or Marilyn J. Kretsinger, Assistant General Counsel, Copyright GC/I&R, PO Box 70400, Southwest Station, Washington, DC 20024. Telephone: (202) 707–8380. Fax: (202) 707–8366.

SUPPLEMENTARY INFORMATION: The Copyright Office reviewed its regulations and, on June 28, 2000, published non-substantive, technical amendments that updated and made minor corrections to the agency's rules. The Office now makes additional clarifying technical amendments in 37 CFR part 201 and makes a correction in 37 CFR part 204 that was inadvertently overlooked in the June 28th document.

List of Subjects

37 CFR Part 201

Copyright.

37 CFR Part 202

Claims, Copyright.

37 CFR Part 204

Privacy.

Final Rule

Accordingly, 37 CFR parts 201, 202, and 204 are amended by making the following corrections and amendments:

PART 201—GENERAL PROVISIONS

1. The authority citation for Part 201 continues to read as follows:

Authority: 17 U.S.C. 702.

§ 201.5 [Amended]

2. Section 201.5(c)(1)(viii) is amended by removing ''A certification.''.

§ 201.28 [Amended]

3. Section 201.28(c)(4) is amended by adding a ''-'' (hyphen) between ''two'' and ''month''.

PART 202—REGISTRATION OF CLAIMS TO COPYRIGHT

4. The authority citation for Part 202 continues to read as follows:

Authority: 17 U.S.C. 408, 702.

§ 202.22 [Amended]

5. Section 202.22(c)(1) is amended by removing ''title;'' and adding ''title'' in its place.

PART 204—PRIVACY ACT: POLICIES AND PROCEDURES

6. The authority citation for Part 204 continues to read as follows:

Authority: 17 U.S.C. 702; 5 U.S.C. 552(a).

7. Section 204.8(a) is amended by revising the first sentence to read as follows:

§ 204.8 Appeal of refusal to correct or amend an individual's record.

(a) An individual who disagrees with a refusal of the Copyright Office to amend his or her record may request a review of the denial. * * *

* * * * *

Dated: August 2, 2000.

Marilyn J. Kretsinger,

Assistant General Counsel.

[FR Doc. 00–20082 Filed 8–9–00; 8:45 am]

BILLING CODE 1410–30–P

ENVIRONMENTAL PROTECTION AGENCY

40 CFR Part 60

[AD–FRL–6846–6]

RIN 2060–AG22

Amendments to Standards of Performance for New Stationary Sources; Monitoring Requirements

AGENCY: Environmental Protection Agency (EPA).

ACTION: Final rule.

SUMMARY: The EPA is issuing revisions to the monitoring requirements to Performance Specification 1 (PS–1) of appendix B to part 60. The revisions clarify and update requirements for source owners and operators who must install and use continuous stack or duct opacity monitoring equipment. The revisions also update design and performance validation requirements for continuous opacity monitoring system (COMS) equipment in appendix B, PS–1. These revisions do not change an affected facility's applicable emission standards or requirements to monitor opacity. However, the revisions do the following: clarify the obligations of owners, operators, and opacity monitor vendors; reaffirm and update COMS design and performance requirements by incorporating by reference American Society for Testing and Materials (ASTM) D 6216–98 (approved February 10, 1998); provide EPA and affected facilities with equipment assurances for carrying out effective monitoring.

DATES: This rule is effective February 6, 2001. The incorporation by reference of certain publications listed in the regulations is approved by the Director of the Federal Register as of February 6, 2001.

ADDRESSES: Air Docket Section (MC–6102), Attention: Docket No. A–91–07, U.S. Environmental Protection Agency, Room M–1500, First Floor, Waterside Mall, 401 M Street, SW, Washington, DC 20460. Mr. Solomon Ricks, Source Characterization Group A, Emissions, Monitoring, and Analysis Division (MD–19), U. S. Environmental Protection Agency, Research Triangle Park, North Carolina 27711.

FOR FURTHER INFORMATION CONTACT: Mr. Solomon Ricks, (919) 541–5242; Air Docket, (202) 260–7548.

SUPPLEMENTARY INFORMATION:

Docket, No. A–91–07, containing information relevant to this rulemaking, is available for public inspection between 8:00 a.m. and noon and 1:30 p.m. and 4:00 p.m., Monday through Friday, except for Federal holidays, at EPA's Air Docket Section. A reasonable fee may be charged for copying.

Overview. The preamble summarizes the legal authority for these revisions, background information, technical and economic methodology used by the Agency to develop these revisions, impacts of these revisions, regulatory implementation, responses to public comments, and the availability of supporting documents.

Regulated Entities. These revisions apply to certain facilities, and they may apply to others.

(a) The revisions apply to any facility that is:

(1) Required to install a new COMS, relocate an existing COMS, replace an existing COMS.

(2) Required to recertify an existing COMS that has undergone substantial refurbishing (in the opinion of the enforcing agency).

(3) Specifically required to recertify the COMS, as required in the Code of Federal Regulations (CFR).

(b) These requirements may also apply to stationary sources located in a State, District, Reservation, or Territory that has adopted these revisions into its implementation plan.

Background Documentation. The following is a list of background documents pertaining to this rulemaking:

(1) Summary of Comments and Responses to the Proposed Revisions to PS–1. July 1998. Docket item No. IV–A–01.

(2) Summary of Performance Specification 1 (PS–1) Stakeholder Meeting. June 1996. Docket item No. IV–E–01.

(3) Summary of Comments and Responses to the PS–1 Supplemental Proposal. April 1999. Docket item No. IV–A–02.

(4) The EPA Public Comment Meeting: Measurement Methods for Opacity Stack Monitoring. October 1998. Docket item No. IV–E–02.

The two Summary of Comments and Responses documents (items 1 and 3) for this final rule contain a summary of all public comments made on the rule and our response to the comments. The Summary of Performance Specification 1 (PS–1) Stakeholder Meeting (item 2) contains a brief summary of the meeting taken from a poor quality audio recording of the meeting. The EPA Public Comment Meeting: Measurement Methods for Opacity Stack Monitoring (item 4) contains a transcript of the public hearing on the Supplemental Proposal.

Technology Transfer Network. The Technology Transfer Network (TTN) is one of EPA's electronic bulletin boards. The TTN provides information and technology exchange in various areas of air pollution control. New air regulations are posted on the TTN through the world wide web at ''http://www.epa.gov/ttn''.

The information presented in this preamble is organized as follows:

I. Background
II. Regulatory History of This Rulemaking
III. Major Public Comments and EPA Responses and Changes to the Proposed Revisions
A. Comments and Responses on the Proposed PS–1
B. Comments and Responses on the Supplemental Proposal
C. Applicability
D. Definitions

E. Changes in Design Specifications
F. Other Revisions
IV. Administrative Requirements
A. Docket
B. Executive Order 12866
C. Executive Order 13132
D. Paperwork Reduction Act
E. Regulatory Flexibility
F. Unfunded Mandates Act
G. National Technology Transfer and Advancement Act
H. Executive Order 13045
I. Congressional Review Act
J. Executive Order 13084

I. Background

We published the Specifications and Test Procedures for Opacity Continuous Emission Monitoring Systems in Stationary Sources, PS–1 (40 CFR Part 60 Appendix B) in the **Federal Register** on October 6, 1975 (40 FR 64250). We published an amendment to PS–1 on March 30, 1983 (48 FR 13322). Since the 1983 amendment, we gained more experience and understanding of COMS performance and operation. Also, manufacturers continued to improve the design of opacity monitors. In 1989 and 1990, we conducted opacity monitor manufacturer evaluations and found varying levels of sophistication in how manufacturers tested the performance of their monitors. For example, the detection limits of some testing equipment used by the manufacturers, were found to be limiting factors in evaluating COMS. In other cases, the evaluation showed that the COMS manufacturers had identified incorrect calculation procedures as well as inclusion of a component that caused an unacceptable COMS response. Other evaluations done in 1992 identified a continuing problem of clearly depicting misalignment of the transceiver and retroreflector. In 1992, we observed COMS responses over different distances for the COMS alignment test and concluded that the alignment check needed to be done at the installation pathlength. Moreover, from 1989 to 1992, we observed the angle of view (AOV) and angle of projection (AOP) testing, conducted by 10 major manufacturers of COMS, and concluded that the AOV and AOP should be reduced from the current 5 degrees to 4 degrees. This change reflects manufacturers' improvement in the monitors' capabilities. Lastly, the primary concern of COMS data users was the capability of the monitor to measure opacity accurately at or near the applicable standard. Once the opacity level exceeds the standard, the magnitude of the emissions is of lesser concern than the duration of the exceedance. Therefore, the levels at which the opacity monitor is evaluated needed to be revised. Based on the findings of our evaluations, we decided to update PS–1 to meet current industry practices and to ensure a continued improvement in the quality of opacity data.

II. Regulatory History of This Rulemaking

We proposed revisions to PS–1 in the **Federal Register** (59 FR 60585) on November 25, 1994. Public comments were accepted for 60 days, until January 24, 1995. We received a total of 89 individual comments from 14 separate commenters. Comments on the November 1994 proposal revealed some concern and confusion with the design specifications and with the test procedures to verify compliance with the design specifications. A summary of the public comments and EPA's response to those comments is in the docket (IV–A–01). To ensure adequate understanding of the technical issues uncovered in the comments, we held a public stakeholder meeting on June 12, 1996. Attendees included opacity monitor manufacturers, State and local agencies, EPA regional offices, and COMS owners and operators. A few of the monitor manufacturers were also members of ASTM. A summary of the stakeholder meeting is in the docket (IV–E–01). As an outcome of the stakeholder meeting, in September 1996, ASTM D22.03, a Subcommittee on Ambient Atmospheres and Source Emissions, volunteered to undertake development of a Standard Practice for opacity monitor manufacturers. The Standard Practice that they developed (1) offered additional design and performance specifications and test procedures to eliminate many of the performance problems that EPA encountered with existing COMS and (2) contributed to ensuring the quality of opacity monitoring results without restricting future technological development.

On September 23, 1998, we published a supplemental proposal in the **Federal Register** (63 FR 50824) to incorporate ASTM D 6216–98 by reference into the proposed revisions to PS–1. Public comments were accepted for 60 days. A total of 12 commenters responded to the supplemental proposal. A summary of the public comments and EPA's response to those comments is in the docket (IV–A–02). On October 23, 1998, by request, we held a public hearing on the supplemental proposal. A summary of the public hearing is in the docket (IV–E–02).

III. Major Public Comments and EPA Responses and Changes to the Proposed Revisions

A. Comments and Responses on the Proposed PS–1

We received a total of 89 individual comments from 14 separate commenters on the November 24, 1994, proposed revisions. The significant comments on the 1994 proposal came from manufacturers and focused primarily on the design specification and the verification test procedures. Specifically, one manufacturer stated PS–1 should include specifications for: (1) limiting the analyzer's sensitivity to ambient light, (2) limiting the analyzer's sensitivity to AC line voltage variations, (3) limiting the analyzer's potential opacity error over the entire range of expected operating temperatures, and (4) describing the analyzer's ability to meet some normal shock and vibration criteria. Another manufacturer stated a specification and verification test should be added to determine the homogeneity of the light beam. Several manufacturers suggested terminology was needed in PS–1 to distinguish between zero drift and dust accumulation on exposed optical surfaces. Another manufacturer described in detail the shortcomings of the angle of view and angle of projection verification procedures. Specifically, the manufacturer stated that the equipment being tested should incorporate whatever field restricting devices that will be installed with the transmissometer. He felt since most light sources are chopped to differentiate between ambient light and measurement light, it needs to be specified that the nondirectional light source may be chopped if required to be compatible with the light detection scheme. Also, since some chopping rates are so high as to only be feasible with light emitting diodes, it should be allowable to use the actual source, if necessary. If the actual source is used without projection optics, and it does not provide sufficient light at 3 meters to be detectable, a shorter distance should be allowed or use the normal projection optics, if required. Each of these issues is already addressed by the ASTM D 6216–98 Standard Practice. Therefore we adopted ASTM's Standard Practice by reference into PS–1.

Several commenters requested that existing COMS that are moved or refurbished should not have to meet the requirements of this new PS–1. They argued that existing COMS would be required to have new span filters (in the PS–1 revisions, the term ''span'' is no longer used; it has been replaced with

upscale calibration value) installed and certified if relocated or refurbished. This issue was also raised in the comments on the supplemental proposal. The relocation of a COMS is likely to have an impact on the pathlength correction factor, which will impact the upscale calibration value. A change in the upscale calibration value could necessitate a change in the upscale calibration filter. The revisions to PS–1 ensure continued improvement in the quality of opacity data being collected, primarily due to the clarification of the design specification verification procedures and the performance specifications. The procedures are written in a manner to eliminate diverse interpretations. Therefore, we are requiring relocated or refurbished COMS to meet the new PS–1.

Many commenters suggested that the 20 percent dirty window compensation should not be allowed for any COMS. The commenters believed opacity monitor manufacturers are capable of utilizing improved purge systems to prevent dirt buildup. Also, it was suggested that errors of deliberate misadjustment or neglect of maintenance of monitors could result. We agreed with the suggestion that deliberate misadjustment could occur, as well as neglect of maintenance of monitors, and the dirty window compensation is now 4 percent.

Several manufacturers commented that the calibration error test, instrument response time test, and optical alignment sight test should also be done by the manufacturer and not solely at the source by the owner or operator. Because the manufacturers have the special equipment to do these tests, we agreed that the calibration error, instrument response time, and optical alignment sight tests should be done by the manufacturer. In the supplemental proposal, we only required the manufacturers to perform the aforementioned tests. We received comments on the supplemental proposal from state regulatory agencies stating that facilities should continue to also be responsible for conducting these tests. One commenter argued that the burden on facilities would be minimal, because manufacturers' representatives typically are directly involved with initial onsite installation and testing. The final rule requires both the manufacturers and facilities to perform the calibration error, instrument response time, and optical alignment sight tests. The final rule also requires the manufacturer to conduct performance verification tests on each monitor at installation-specific conditions or at clearly defined default conditions if installation conditions are not known.

B. Comments and Responses on the Supplemental Proposal

A total of 12 commenters submitted written comments about the September 23, 1998 supplemental proposal. Three people that spoke at the public hearing did not submit written comments. The most frequent comment concerned the manner in which we incorporated ASTM D 6216–98 by reference into PS–1. Representatives from ASTM believed incorporating D 6216–98 by citing the various paragraphs disrupted the flow of the Standard Practice. They felt it would be more advantageous if we incorporated the Standard Practice in its entirety. We agreed with this assessment; therefore, in this final rule, we have incorporated D 6216–98 in its entirety.

Both manufacturers and State agency representatives commented about the lack of field audit procedures to confirm the performance of the COMS after it was installed. They suggested we include the procedures that were in the 1994 PS–1 proposal (59 FR 60585) for the calibration error test, instrument response time test, and optical alignment sight test. Also, other commenters suggested that the field audit procedures should include a check of the entire monitoring system to verify that the combined opacity monitor and data recording system correctly average and record averaging period values. We agreed that field audit procedures were necessary at the source, therefore we included field performance audit procedures and made them consistent with ASTM D 6216 in terms of both terminology and technology.

Many commenters expressed concern with the amount of time allowed for opacity monitor manufacturers to comply with the new specifications. They felt 30 days was not enough time. Several manufacturers suggested they could be in compliance within 180 days. We agreed with the suggested time for compliance and moved the effective date from 30 days to 180 days after publication in the **Federal Register**.

Some commenters questioned our replacing the old 168-hour Conditioning Period and 168-hour Operational Test Period with an extended 336-hour Operational Test Period. Commenters suggested making the Operational Test Period, during which the zero and upscale drift tests are conducted, consistent with the 7-day drift test period for a gaseous monitoring system. Also, a few commenters asked that normal source downtime be included in the Operational Test Period. Recognizing that source owners and operators would run informal conditioning period prior to beginning the operational test period, we eliminated the 168-hour Conditioning Period and reduced the Operational Test Period from 336 hours to 168 hours. We also clarified the language in the final rule and included minimum source operating times required during the Operational Test Period for batch operations and continuous operating processes.

Other commenters questioned our retaining the calibration stability test in PS–1 when tests were included in the ASTM Standard Practice to detect opacity monitors that have short-term drift problems. They believed including the test in PS–1 was redundant and unnecessary. We agreed with the suggestion that the test was redundant, and deleted the calibration stability test from the final rule.

One commenter stated that, as proposed, the requirements relating to daily zero and upscale calibration check levels would impose manufacturing problems which would significantly increase the cost to manufacture opacity monitors. This comment was given due to the manner in which ASTM D 6216–98 was incorporated in the supplemental proposal. The commenter stated that incorporating only certain sections of the standard created unnecessary confusion regarding the applicable requirements, allowed for mis-application of the ASTM standard, and created unnecessary complexity and significantly increased costs for regulatory agencies, instrument manufacturers, and the regulated facilities. Specifically, it was stated that to meet the values in the supplemental proposal given for the zero and upscale calibration, a manufacturer would have to maintain 900 calibration filters. Although we did not agree with this interpretation of the rule, after reviewing the comments submitted on the supplemental proposal, we agreed that misunderstandings could occur with the rule as proposed. With the incorporation of the ASTM standard in its entirety, we have eliminated any confusion which may occur, and we have eliminated any unnecessary complexity in the rule. The final rule will not significantly increase the cost for regulatory agencies, instrument manufacturers, or the regulated facilities.

C. Applicability

The ASTM D22.03 Task Group chairperson indicated in his comments on the supplemental proposal that the

calibration error specification of ±3 percent opacity, the zero and upscale drift specifications of ±2 percent opacity, and the PS–1 requirements to adjust monitors when drift exceeds two times the specification (i.e., ±4 percent opacity) are inappropriate for monitoring an opacity standard below 10 percent. Special calibration attenuators and calibration techniques, not yet available on a broad basis, are needed for cases where the opacity standard is below 10 percent. He noted that imprecision allowances of this magnitude create excessive uncertainty for establishing compliance with a low opacity limit. The ASTM representative noted that ASTM D 6216–98 specifications ensure accurate COMS measurements at sources with opacity standards of 10 percent opacity or greater.

The ASTM representative also indicated that the design specification for full scale to be set at 80 percent opacity or above is inappropriate for sources where the compliance level is below 10 percent opacity. The commenter also indicated other technical issues related to continuous monitoring of opacity from sources subject to opacity standards less than 10 percent which PS–1 does not adequately address. Therefore, the ASTM opacity Task Group elected to defer consideration of these special issues in ASTM D 6216–98 and instead specified that ASTM D 6216–98 will ensure that COMS ''meet minimum design and calibration requirements, necessary in part, for accurate opacity monitoring measurements in regulatory environmental monitoring applications subject to 10 percent or higher opacity standards.''

We recognize there are potential measurement errors associated with monitoring opacity in stacks especially for emission units subject to opacity limits less than 10 percent. The uncertainties in measurement accuracy result from several factors. One is the current unavailability of calibration attenuators for opacity levels below 6 percent (3 percent for single-pass instruments). There are experimental techniques under review that would allow preparation and validation of calibration attenuators at levels down to 1 or 2 percent; however, the process for manufacturing and validating such devices is not yet in place. We intend to work with the ASTM Task Group to further this development work.

A second source of potential measurement error is that associated with the calibration error allowances, the zero and upscale drift specifications, the mandatory drift adjustment levels, and the imprecision associated with the allowed compensation for dirt accumulation. The imprecision associated with these tolerances may be adequate for assuring the quality of higher opacity measurements, but may be inadequate for assuring the quality of measurements of opacity less than 10 percent. In cooperation with the ASTM Task Group, we will continue to evaluate the capabilities of COMS relative to these performance specifications. The purpose of these evaluations is to determine whether tighter specifications are achievable and whether such tighter specifications would assure data of sufficient quality at opacity levels less than 10 percent. Possible outcomes include another revision to PS–1 addressing the on-site performance requirements or a second performance specification directed at COMS used at facilities with opacity limits less than 10 percent.

A third factor is the minimum full scale range of 80 percent opacity required of COMS in PS–1. This range is necessary in many cases to ensure that short term (i.e., less than 6 minutes) excursions at high opacity levels are captured in the 6-minute average. On the other hand, the specified full scale range may be inappropriately high for accurate measurements of opacity less than 10 percent for some instruments. We, again in cooperation with the ASTM Task Group, will evaluate a number of options to address this concern. Among potential options is the reduction of the required measurement range for low opacity applications; another is a requirement for dual range output with separate calibration and drift allowances. The revised PS–1 includes an option to establish a site-specific full scale range of no less than 50 percent opacity at facilities with opacity limits less than 10 percent.

We can estimate the upper range of potential measurement error that may be associated with COMS data by using a propagation of errors statistical analysis of the calibration error, zero and upscale drift, and alignment tolerances as specified in PS–1. This very conservative approach produces a potential measurement error of about 4 percent opacity. A properly operating and aligned COMS should experience measurement error significantly less than this magnitude.

While we recognize the potential for measurement error associated with monitoring opacity where the opacity limit is less than 10 percent, we believe it is inappropriate to limit the applicability of PS–1 based on the applicable emission limit. The final PS–1 is applicable to all COMS required to be certified or recertified. Instead of limiting the applicability, the final PS–1 will take into account (through statistical procedures or otherwise) the measurement uncertainty associated with COMS measurements below 10 percent opacity. Regardless of the potential for error in low level COMS readings, you, the owner or operator, are expected to respond to and correct as soon as possible any indication of excess emissions for an opacity limit consistent with good air pollution control practices for minimizing emissions as required by Part 60 and other regulations.

D. Definitions

All of the definitions from ASTM D 6216–98 are incorporated by reference. Comments received concerning the definitions suggested that they were subject to a variety of interpretations as written. As a result of incorporating ASTM D 6216–98 in its entirety in the final rule, we deleted redundant definitions present in the proposal and we defined terminology exclusive to PS–1 to be consistent with ASTM D 6216–98.

E. Changes in Design Specifications

There were specific changes in the design specifications detailed in the 1994 proposal (59 FR 60585). These changes were a result of the opacity monitor manufacturer evaluations conducted in 1989 and 1990. Also, the specifications for voltage, temperature, and light fluctuations were introduced in the supplemental proposal (63 FR 50824). There were no comments on the specifications, only on the verification procedures for the specifications. The design specifications changes are as follows:

(1) Angle of View and Angle of Projection. The AOV and AOP are reduced from 5 degrees to 4 degrees.

(2) Calibration Drift Checking System. The COMS must provide a means to simulate a zero and an upscale calibration drift check value in order to check the COMS transmitter/receiver calibration drift. The calibration drift checking system must include, at the same time, all active analyzer internal optics with power or curvature, all active electronic circuitry including the light source, photodetector assembly, electronic or electro-mechanical systems, and hardware and/or software used during normal measurement operation. The upscale calibration check response may not be altered by electronic hardware or software modification during the calibration cycle; the response is representative of

the gains and offsets applied to normal effluent opacity measurements.

(3) Alarms and Warnings. The COMS must provide operators visual or audible alarms or fault condition warnings to facilitate proper operation and maintenance of the COMS.

(4) Zero Compensations. The COMS must provide an automated means to assess and record accumulated automatic zero compensations on a 24-hour basis in order to achieve the correct response to the simulated zero device.

(5) Compensation for Dirt Accumulation. The automatic compensation for dirt accumulation on the exposed optical surfaces of the COMS must now include the compensation allowance in the 4 percent opacity tolerance for zero drift adjustment. Only those optical surfaces directly in the light beam path under normal operation to measure opacity may be measured and compensated for dust accumulation. The COMS must now provide a means to display the level of dust compensation.

(6) Opacity Monitor and External Audit Filters. The opacity monitor must now accommodate independent audits of the measurement system response to external audit filters. The external audit filter access design must ensure (a) the filters are used in conjunction with a zero condition based on the same energy level, or within 5 percent of the energy reaching the detector under actual clear path conditions, (b) the entire beam received by the detector will pass through the attenuator, and (c) the attenuator is inserted in a manner that minimizes interference from reflected light.

(7) Opacity Emissions and the Pathlength Correction Factor. The COMS must now automatically correct opacity emissions that are measured at the COMS installation location to the emission outlet pathlength. The COMS must be designed to ensure the pathlength correction factor (PLCF) cannot be changed by the end user, or the PLCF is recorded during each calibration drift check cycle, or an alarm sounds when the PLCF value is changed.

(8) Voltage, Temperature, and Light Fluctuations. As a result of incorporating ASTM D 6216–98 in its entirety, we incorporated three new design specifications to ensure that the accuracy of opacity monitor data is not affected by fluctuations in supply voltage, ambient temperature, and ambient light over the range specified by the manufacturer.

F. Other Revisions

This final rule also contains some revisions to 40 CFR part 60 § 60.13(d)(1) and (d)(2) and several revisions or corrections to PS–1. These revisions and corrections were given in detail in the 1994 proposal (59 FR 60585) and the supplemental proposal (63 FR 50824). There were no comments on the revisions and corrections, which are summarized below.

We revised 60.13(d)(1) to distinguish between gaseous continuous emissions monitoring systems (CEMS) and continuous opacity monitoring systems (COMS).

We revised 60.13(d)(2) to clarify and update which parts of the COMS must be checked by the daily simulated zero and upscale calibration drift checks and to be consistent with ASTM D 6216–98.

Because the new design specifications now require that the opacity monitor exhibit no interference from ambient light, we modified the installation guidelines. The modification removes the limitation of locating the opacity monitor at a place free of interference from ambient light.

III. Administrative Requirements

A. Docket

The docket is an organized and complete file of all information submitted or otherwise considered by EPA in the development of this rulemaking. The principal purposes of the docket are: (1) to allow interested parties to identify and locate documents so that they can effectively participate in the rulemaking process, and (2) to serve as the record in case of judicial review (except for interagency review materials) [Clean Air Act Section 307(d)(7)(A)].

B. Executive Order 12866

Under Executive Order 12866 (58 FR 51735 October 4, 1993), EPA must determine whether the regulatory action is ''significant'' and therefore subject to Office of Management and Budget (OMB) review and the requirements of the Executive Order. The Order defines ''significant regulatory action'' as one that is likely to result in a rule that may: (1) Have an annual effect on the economy of $100 million or more or adversely affect in a material way the economy, a sector of the economy, productivity, competition, jobs, the environment, public health or safety, or State, local, or Tribal governments or communities; (2) create a serious inconsistency or otherwise interfere with an action taken or planned by another agency; (3) materially alter the budgetary impact of entitlements, grants, user fees, or loan programs, or the rights and obligation of recipients thereof; or (4) raise novel legal or policy issues arising out of legal mandates, the President's priorities, or the principles set forth in the Executive Order.

It has been determined that this rule is not a ''significant regulatory action'' under the terms of Executive Order 12866 and is, therefore, not subject to OMB review.

C. Executive Order 13132

Executive Order 13132, entitled ''Federalism'' (64 FR 43255, August 10, 1999), requires EPA to develop an accountable process to ensure ''meaningful and timely input by State and local officials in the development of regulatory policies that have federalism implications.'' ''Policies that have federalism implications'' is defined in the Executive Order to include regulations that have ''substantial direct effects on the States, on the relationship between the national government and the States, or on the distribution of power and responsibilities among the various levels of government.'' Under Section 6 of Executive Order 13132, EPA may not issue a regulation that has federalism implications, that imposes substantial direct compliance costs, and that is not required by statute, unless the Federal government provides the funds necessary to pay the direct compliance costs incurred by the State and local governments, or EPA consults with State and local officials early in the process of developing the proposed regulation. The EPA also may not issue a regulation that has federalism implications and that preempts State law unless the Agency consults with State and local officials early in the process of developing the proposed regulation.

This final rule does not have federalism implications. It will not have substantial direct effects on the States, on the relationship between the national government and the States, or on the distribution of power and responsibilities among the various levels of government, as specified in Executive Order 13132. This final rule is a revision to an existing rule already being used by State and local governments. The revisions have no impact on how State and local governments apply the rule. Thus, the requirements of section 6 of the Executive Order do not apply to this rule.

D. Paperwork Reduction Act

This final rule does not contain any information collection requirements subject to the Office of Management and

Budget review under the Paperwork Reduction Act of 1980, 44 U.S.C. 3501 *et seq.*

E. Regulatory Flexibility

EPA has determined that it is not necessary to prepare a regulatory flexibility analysis in connection with this final rule. EPA has also determined that this rule will not have a significant economic impact on a substantial number of small entities.

This final rule does not have a significant impact on a substantial number of small entities because no additional cost will be incurred by such entities because of the changes specified by the rule. The requirements of the final rule reaffirm the existing design specifications for a COMS to demonstrate conformance with PS–1. The final rule clarifies the verification procedures for the design specifications, as well as clarifies the responsibilities of manufacturers of opacity monitors and the owners/operators without placing additional burden on either parties.

F. Unfunded Mandates Act

Title II of the Unfunded Mandates Reform Act of 1995 (UMRA), Public Law 104–4, establishes requirements for Federal agencies to assess the effects of their regulatory actions on State, local, and tribal governments and the private sector. Under Section 202 of the UMRA, EPA generally must prepare a written statement, including a cost-benefit analysis, for proposed and final rules with ''Federal mandates'' that may result in expenditures to State, local, and tribal governments in the aggregate, or to the private sector, of $100 million or more in any one year. Before promulgating an EPA rule for which a written statement is needed, section 205 of the UMRA generally requires EPA to identify and consider a reasonable number of regulatory alternatives and adopt the least costly, most cost-effective, or least burdensome alternative that achieves the objectives of the rule. The provisions of section 205 do not apply when they are inconsistent with applicable law. Moreover, section 205 allows EPA to adopt an alternative other than the least costly, most cost-effective or least burdensome alternative if the Administrator publishes with the final rule an explanation why that alternative was not adopted. Before EPA establishes any regulatory requirements that may significantly or uniquely affect small governments, including tribal governments, it must have developed under section 203 of the UMRA a small government agency plan. The plan must provide for notifying potentially affected small governments, enabling officials of affected small governments to have meaningful and timely input in the development of EPA regulatory proposals with significant Federal intergovernmental mandates, and informing, educating, and advising small governments on compliance with the regulatory requirements.

EPA has determined that this rule does not include a Federal mandate that may result in expenditures of $100 million or more for State, local, or tribal governments in the aggregate, or the private sector in any one year. This rule does not include additional requirements for the performance specifications of opacity monitors; the rule only clarifies the language in the specification. Thus, today's rule is not subject to the requirements of sections 202 and 205 of the UMRA. EPA has determined that this rule contains no regulatory requirements that might significantly or uniquely affect small governments. Again, the rule does not add any new requirements; it only clarifies the existing requirements.

G. National Technology Transfer and Advancement Act

The National Technology Transfer and Advancement Act of 1995 (NTTAA), Public Law 104–113, section 12(d) (15 U.S.C. 272 note) directs EPA to use voluntary consensus standards in its regulatory activities unless to do so would be inconsistent with applicable law or otherwise impractical. Voluntary consensus standards are technical standards (*e.g.,* materials specifications, test methods, sampling procedures, and business practices) that are developed or adopted by voluntary consensus standards bodies. The NTTAA directs EPA to provide Congress, through OMB, explanations when the Agency decides not to use available and applicable voluntary consensus standards. This rulemaking involves technical standards. EPA decided to use a voluntary consensus standard developed and adopted by the American Society for Testing and Materials (ASTM), ASTM D 6216–98, Standard Practice for Opacity Monitor Manufacturers to Certify Conformance with Design and Performance Specifications. This standard was chosen because it was developed by ASTM with EPA involvement. The standard used the requirements outlined in PS–1 and developed clear and concise verification procedures for the requirements. Copies of the ASTM standard can be obtained by contacting the American Society for Testing and Materials, 100 Barr Harbor Drive, West Conshohocken, Pennsylvania 19428.

H. Executive Order 13045

Executive Order 13045: ''Protection of Children from Environmental Health Risks and Safety Risks'' (62 FR 19885, April 23, 1997) applies to any rule that (1) is determined to be ''economically significant'' as defined under Executive Order 12866, and (2) concerns an environmental health or safety risk that EPA has reason to believe may have a disproportionate effect on children. If the regulatory action meets both criteria, the Agency must evaluate the environmental health or safety effects of the planned rule on children, and explain why the planned regulation is preferable to other potentially effective and reasonably feasible alternatives considered by the Agency.

EPA interprets Executive Order 13045 as applying only to those regulatory actions that are based on health or safety risks, such that the analysis required under section 5–501 of the Order has the potential to influence the regulation. This rule is not subject to Executive Order 13045 because it does not establish an environmental standard intended to mitigate health or safety risks.

I. Congressional Review Act

The Congressional Review Act, 5 U.S.C. 801 *et seq.*, as added by the Small Business Regulatory Enforcement Fairness Act of 1996, generally provides that before a rule may take effect, the agency promulgating the rule must submit a rule report, which includes a copy of the rule, to each House of the Congress and to the Comptroller General of the United States. EPA will submit a report containing this rule and other required information to the U.S. Senate, the U.S. House of Representatives, and the Comptroller General of the United States prior to publication of the rule in the **Federal Register**. A major rule cannot take effect until 60 days after it is published in the **Federal Register**. This action is not a ''major rule'' as defined by 5 U.S.C. 804 (2). This rule will be effective February 6, 2001.

J. Executive Order 13084: Consultation and Coordination with Indian Tribal Governments

Under Executive Order 13084, EPA may not issue a regulation that is not required by statute, that significantly or uniquely affects the communities of Indian tribal governments, and that imposes substantial direct compliance costs on those communities, unless the Federal government provides the funds necessary to pay the direct compliance costs incurred by the tribal governments, or EPA consults with

those governments. If EPA complies by consulting, Executive Order 13084 requires EPA to provide to the Office of Management and Budget, in a separately identified section of the preamble to the rule, a description of the extent of EPA's prior consultation with representatives of affected tribal governments, a summary of the nature of their concerns, and a statement supporting the need to issue the regulation. In addition, Executive Order 13084 requires EPA to develop an effective process permitting elected officials and other representatives of Indian tribal governments ''to provide meaningful and timely input in the development of regulatory policies on matters that significantly or uniquely affect their communities.'' Today's rule does not significantly or uniquely affect the communities of Indian tribal governments. This rule revises an existing regulation which details the performance and design specifications for continuous opacity monitoring systems. Accordingly, the requirements of section 3(b) of Executive Order 13084 do not apply to this rule.

List of Subjects in 40 CFR Part 60

Environmental protection, Air pollution control; Continuous emission monitoring; Incorporation by reference; Opacity; Particulate matter; Performance specification; Preparation, submittal, and adoption of State implementation plans; Transmissometers; Visible emissions.

Dated: July 31, 2000.

Carol M. Browner,

Administrator.

For the reasons stated in the preamble, title 40, chapter I of the Code of Federal Regulations is amended as follows:

PART 60—STANDARDS OF PERFORMANCE FOR NEW STATIONARY SOURCES

1. The authority citation for part 60 continues to read as follows:

Authority: 42 U.S.C. 7401, 7411, 7413, 7414, 7416, 7601, and 7602.

Subpart A—General Provisions

2. Amend § 60.13 by revising paragraphs (d)(1) and (d)(2) as follows:

§ 60.13 Monitoring requirements.

* * * * *

(d)(1) Owners and operators of a CEMS installed in accordance with the provisions of this part, must automatically check the zero (or low level value between 0 and 20 percent of span value) and span (50 to 100 percent of span value) calibration drifts at least once daily in accordance with a written procedure. The zero and span must, as a minimum, be adjusted whenever either the 24-hour zero drift or the 24-hour span drift exceeds two times the limit of the applicable performance specification in appendix B of this part. The system must allow the amount of the excess zero and span drift to be recorded and quantified whenever specified. Owners and operators of a COMS installed in accordance with the provisions of this part, must automatically, intrinsic to the opacity monitor, check the zero and upscale (span) calibration drifts at least once daily. For a particular COMS, the acceptable range of zero and upscale calibration materials is as defined in the applicable version of PS–1 in appendix B of this part. For a COMS, the optical surfaces, exposed to the effluent gases, must be cleaned before performing the zero and upscale drift adjustments, except for systems using automatic zero adjustments. The optical surfaces must be cleaned when the cumulative automatic zero compensation exceeds 4 percent opacity.

(2) Unless otherwise approved by the Administrator, the following procedures must be followed for a COMS. Minimum procedures must include an automated method for producing a simulated zero opacity condition and an upscale opacity condition using a certified neutral density filter or other related technique to produce a known obstruction of the light beam. Such procedures must provide a system check of all active analyzer internal optics with power or curvature, all active electronic circuitry including the light source and photodetector assembly, and electronic or electro-mechanical systems and hardware and or software used during normal measurement operation.

* * * * *

3. Amend § 60.17 by adding paragraph (a)(64) as follows:

§ 60.17 Incorporation by reference.

* * * * *

(a) * * *

(64) ASTM D 6216–98 Standard Practice for Opacity Monitor Manufacturers to Certify Conformance with Design and Performance Specifications, IBR approved February 6, 2001 for appendix B, PS–1.

* * * * *

4. Appendix B, Performance Specification 1 is revised to read as follows:

Appendix B to Part 60—Performance Specifications

* * * * *

Performance Specification 1—Specifications and Test Procedures for Continuous Opacity Monitoring Systems in Stationary Sources

1.0 What Is the Purpose and Applicability of Performance Specification 1?

Performance Specification 1 (PS–1) provides (1) requirements for the design, performance, and installation of a continuous opacity monitoring system (COMS) and (2) data computation procedures for evaluating the acceptability of a COMS. It specifies activities for two groups (1) the owner or operator and (2) the opacity monitor manufacturer.

1.1 Measurement Parameter. PS–1 covers the instrumental measurement of opacity caused by attenuation of projected light due to absorption and scatter of the light by particulate matter in the effluent gas stream.

1.2 What COMS must comply with PS–1? If you are an owner or operator of a facility with a COMS as a result of this Part, then PS–1 applies to your COMS if one of the following is true:

(1) Your facility has a new COMS installed after February 6, 2001; or

(2) Your COMS is replaced, relocated, or substantially refurbished (in the opinion of the regulatory authority) after February 6, 2001; or

(3) Your COMS was installed before February 6, 2001 and is specifically required by regulatory action other than the promulgation of PS–1 to be recertified.

If you are an opacity monitor manufacturer, then paragraph 8.2 applies to you.

1.3 Does PS–1 apply to a facility with an applicable opacity limit less than 10 percent? If you are an owner or operator of a facility with a COMS as a result of this Part and the applicable opacity limit is less than 10 percent, then PS–1 applies to your COMS as described in section 1.2; taking into account (through statistical procedures or otherwise) the uncertainties associated with opacity measurements, and following the conditions for attenuators selection for low opacity applications as outlined in Section 8.1(3)(ii). At your option, you, the source owner or operator, may select to establish a reduced full scale range of no less than 50 percent opacity instead of the 80 percent as prescribed in section 3.5, if the applicable opacity limit for your facility is less than 10 percent. The EPA recognizes that reducing the range of the analyzer to 50 percent does not necessarily result in any measurable improvement in measurement accuracy at opacity levels less than 10 percent; however, it may allow improved chart recorder interpretation.

1.4 What data uncertainty issues apply to COMS data? The measurement uncertainties associated with COMS data result from several design and performance factors including limitations on the availability of calibration attenuators for opacities less than about 6 percent (3 percent for single-pass instruments), calibration error tolerances, zero and upscale drift tolerances, and

allowance for dust compensation that are significant relative to low opacity levels. The full scale requirements of this PS may also contribute to measurement uncertainty for opacity measurements where the applicable limits are below 10 percent opacity.

2.0 What Are the Basic Requirements of PS–1?

PS–1 requires (1) opacity monitor manufacturers comply with a comprehensive series of design and performance specifications and test procedures to certify opacity monitoring equipment before shipment to the end user, (2) the owner or operator to follow installation guidelines, and (3) the owner or operator to conduct a set of field performance tests that confirm the acceptability of the COMS after it is installed.

2.1 ASTM D 6216–98 is the reference for design specifications, manufacturer's performance specifications, and test procedures. The opacity monitor manufacturer must periodically select and test an opacity monitor, that is representative of a group of monitors produced during a specified period or lot, for conformance with the design specifications in ASTM D 6216–98. The opacity monitor manufacturer must test each opacity monitor for conformance with the manufacturer's performance specifications in ASTM D 6216–98.

2.2 Section 8.1(2) provides guidance for locating an opacity monitor in vertical and horizontal ducts. You are encouraged to seek approval for the opacity monitor location from the appropriate regulatory authority prior to installation.

2.3 After the COMS is installed and calibrated, the owner or operator must test the COMS for conformance with the field performance specifications in PS–1.

3.0 What Special Definitions Apply to PS–1?

3.1 All definitions and discussions from section 3 of ASTM D 6216–98 are applicable to PS–1.

3.2 *Centroid Area.* A concentric area that is geometrically similar to the stack or duct cross-section and is no greater than 1 percent of the stack or duct cross-sectional area.

3.3 *Data Recorder.* That portion of the installed COMS that provides a permanent record of the opacity monitor output in terms of opacity. The data recorder may include automatic data reduction capabilities.

3.4 *External Audit Device.* The inherent design, equipment, or accommodation of the opacity monitor allowing the independent assessment of the COMS's calibration and operation.

3.5 *Full Scale.* The maximum data display output of the COMS. For purposes of recordkeeping and reporting, full scale will be greater than 80 percent opacity.

3.6 *Operational Test Period.* A period of time (168 hours) during which the COMS is expected to operate within the established performance specifications without any unscheduled maintenance, repair, or adjustment.

3.7 *Primary Attenuators.* Those devices (glass or grid filter that reduce the transmission of light) calibrated according to procedures in section 7.1.

3.8 *Secondary Attenuators.* Those devices (glass or grid filter that reduce the transmission of light) calibrated against primary attenuators according to procedures in section 7.2.

3.9 *System Response Time.* The amount of time the COMS takes to display 95 percent of a step change in opacity on the COMS data recorder.

4.0 Interferences. Water Droplets

5.0 What Do I Need To Know To Ensure the Safety of Persons Using PS–1?

The procedures required under PS–1 may involve hazardous materials, operations, and equipment. PS–1 does not purport to address all of the safety problems associated with these procedures. Before performing these procedures, you must establish appropriate safety and health practices, and you must determine the applicable regulatory limitations. You should consult the COMS user's manual for specific precautions to take.

6.0 What Equipment and Supplies Do I Need?

6.1 *Continuous Opacity Monitoring System.* You, as owner or operator, are responsible for purchasing an opacity monitor that meets the specifications of ASTM D 6216–98, including a suitable data recorder or automated data acquisition handling system. Example data recorders include an analog strip chart recorder or more appropriately an electronic data acquisition and reporting system with an input signal range compatible with the analyzer output.

6.2 *Calibration Attenuators.* You, as owner or operator, are responsible for purchasing a minimum of three calibration attenuators that meet the requirements of PS–1. Calibration attenuators are optical filters with neutral spectral characteristics. Calibration attenuators must meet the requirements in section 7 and must be of sufficient size to attenuate the entire light beam received by the detector of the COMS. For transmissometers operating over a narrow bandwidth (*e.g.,* laser), a calibration attenuator's value is determined for the actual operating wavelengths of the transmissometer. Some filters may not be uniform across the face. If errors result in the daily calibration drift or calibration error test, you may want to examine the across-face uniformity of the filter.

6.3 *Calibration Spectrophotometer.* Whoever calibrates the attenuators must have a spectrophotometer that meets the following minimum design specifications:

Parameter	Specification
Wavelength range.	300–800 nm.
Detector angle of view.	<10°.
Accuracy	<0.5% transmittance, NIST traceable calibration.

7.0 What Reagents and Standards Do I Need?

You will need to use attenuators (*i.e.,* neutral density filters) to check the daily calibration drift and calibration error of a COMS. Attenuators are designated as either primary or secondary based on how they are calibrated.

7.1 Attenuators are designated primary in one of two ways:

(1) They are calibrated by NIST; or

(2) They are calibrated on a 6-month frequency through the assignment of a luminous transmittance value in the following manner:

(i) Use a spectrophotometer meeting the specifications of section 6.3 to calibrate the required filters. Verify the spectrophotometer calibration through use of a NIST 930D Standard Reference Material (SRM). A SRM 930D consists of three neutral density glass filters and a blank, each mounted in a cuvette. The wavelengths and temperature to be used in the calibration are listed on the NIST certificate that accompanies the reported values. Determine and record a transmittance of the SRM values at the NIST wavelengths (three filters at five wavelengths each for a total of 15 determinations). Calculate a percent difference between the NIST certified values and the spectrophotometer response. At least 12 of the 15 differences (in percent) must be within ±0.5 percent of the NIST SRM values. No difference can be greater than ±1.0 percent. Recalibrate the SRM or service the spectrophotometer if the calibration results fail the criteria.

(ii) Scan the filter to be tested and the NIST blank from wavelength 380 to 780 nm, and record the spectrophotometer percent transmittance responses at 10 nm intervals. Test in this sequence: blank filter, tested filter, tested filter rotated 90 degrees in the plane of the filter, blank filter. Calculate the average transmittance at each 10 nm interval. If any pair of the tested filter transmittance values (for the same filter and wavelength) differ by more than ±0.25 percent, rescan the tested filter. If the filter fails to achieve this tolerance, do not use the filter in the calibration tests of the COMS.

(iii) Correct the tested filter transmittance values by dividing the average tested filter transmittance by the average blank filter transmittance at each 10 nm interval.

(iv) Calculate the weighted (to the response of the human eye), tested filter transmittance by multiplying the transmittance value by the corresponding response factor shown in table 1–1, to obtain the Source C Human Eye Response.

(v) Recalibrate the primary attenuators semi-annually if they are used for the required calibration error test. Recalibrate the primary attenuators annually if they are used only for calibration of secondary attenuators.

7.2 Attenuators are designated secondary if the filter calibration is done using a laboratory-based transmissometer. Conduct the secondary attenuator calibration using a laboratory-based transmissometer calibrated as follows:

(i) Use at least three primary filters of nominal luminous transmittance 50, 70 and 90 percent, calibrated as specified in section

7.1(2)(i), to calibrate the laboratory-based transmissometer. Determine and record the slope of the calibration line using linear regression through zero opacity. The slope of the calibration line must be between 0.99 and 1.01, and the laboratory-based transmissometer reading for each primary filter must not deviate by more than ±2 percent from the linear regression line. If the calibration of the laboratory-based transmissometer yields a slope or individual readings outside the specified ranges, secondary filter calibrations cannot be performed. Determine the source of the variations (either transmissometer performance or changes in the primary filters) and repeat the transmissometer calibration before proceeding with the attenuator calibration.

(ii) Immediately following the laboratory-based transmissometer calibration, insert the secondary attenuators and determine and record the percent effective opacity value per secondary attenuator from the calibration curve (linear regression line).

(iii) Recalibrate the secondary attenuators semi-annually if they are used for the required calibration error test.

8.0 What Performance Procedures Are Required To Comply With PS–1?

Procedures to verify the performance of the COMS are divided into those completed by the owner or operator and those completed by the opacity monitor manufacturer.

8.1 What procedures must I follow as the Owner or Operator?

(1) You must purchase an opacity monitor that complies with ASTM D 6216–98 and obtain a certificate of conformance from the opacity monitor manufacturer.

(2) You must install the opacity monitor at a location where the opacity measurements are representative of the total emissions from the affected facility. You must meet this requirement by choosing a measurement location and a light beam path as follows:

(i) Measurement Location. Select a measurement location that is (1) at least 4 duct diameters downstream from all particulate control equipment or flow disturbance, (2) at least 2 duct diameters upstream of a flow disturbance, (3) where condensed water vapor is not present, and (4) accessible in order to permit maintenance.

(ii) Light Beam Path. Select a light beam path that passes through the centroidal area of the stack or duct. Also, you must follow these additional requirements or modifications for these measurement locations:

If your measurement location is in a:	And is:	Then use a light beam path that is:
1. Straight vertical section of stack or duct.	Less than 4 equivalent diameters downstream from a bend.	In the plane defined by the upstream bend (see figure 1–1).
2. Straight vertical section of stack or duct.	Less than 4 equivalent diameters upstream from a bend.	In the plane defined by the downstream bend (see figure 1–2).
3. Straight vertical section of stack or duct.	Less than 4 equivalent diameters downstream and is also less than 1 diameter upstream from a bend.	In the plane defined by the upstream bend (see figure 1–3).
4. Horizontal section of stack or duct.	At least 4 equivalent diameters downstream from a vertical bend.	In the horizontal plane that is between ⅓ and ½ the distance up the vertical axis from the bottom of the duct (see figure 1–4).
5. Horizontal section of duct	Less than 4 equivalent diameters downstream from a vertical bend.	In the horizontal plane that is between ½ and ⅔ the distance up the vertical axis from the bottom of the duct for upward flow in the vertical section, and is between ⅓ and ½ the distance up the vertical axis from the bottom of the duct for downward flow (figure 1–5).

(iii) Alternative Locations and Light Beam Paths. You may select locations and light beam paths, other than those cited above, if you demonstrate, to the satisfaction of the Administrator or delegated agent, that the average opacity measured at the alternative location or path is equivalent to the opacity as measured at a location meeting the criteria of sections 8.1(2)(i) and 8.1(2)(ii). The opacity at the alternative location is considered equivalent if (1) the average opacity value measured at the alternative location is within ±10 percent of the average opacity value measured at the location meeting the installation criteria, and (2) the difference between any two average opacity values is less than 2 percent opacity (absolute). You use the following procedure to conduct this demonstration: simultaneously measure the opacities at the two locations or paths for a minimum period of time (*e.g.,* 180-minutes) covering the range of normal operating conditions and compare the results. The opacities of the two locations or paths may be measured at different times, but must represent the same process operating conditions. You may use alternative procedures for determining acceptable locations if those procedures are approved by the Administrator.

(3) Field Audit Performance Tests. After you install the COMS, you must perform the following procedures and tests on the COMS.

(i) Optical Alignment Assessment. Verify and record that all alignment indicator devices show proper alignment. A clear indication of alignment is one that is objectively apparent relative to reference marks or conditions.

(ii) Calibration Error Check. Conduct a three-point calibration error test using three calibration attenuators that produce outlet pathlength corrected, single-pass opacity values shown in ASTM D 6216–98, section 7.5. If your applicable limit is less than 10 percent opacity, use attenuators as described in ASTM D 6216–98, section 7.5 for applicable standards of 10 to 19 percent opacity. Confirm the external audit device produces the proper zero value on the COMS data recorder. Separately, insert each calibration attenuators (low, mid, and high-level) into the external audit device. While inserting each attenuator, (1) ensure that the entire light beam passes through the attenuator, (2) minimize interference from reflected light, and (3) leave the attenuator in place for at least two times the shortest recording interval on the COMS data recorder. Make a total of five nonconsecutive readings for each attenuator. At the end of the test, correlate each attenuator insertion to the corresponding value from the data recorder. Subtract the single-pass calibration attenuator values corrected to the stack exit conditions from the COMS responses. Calculate the arithmetic mean difference, standard deviation, and confidence coefficient of the five measurements value using equations 1–3, 1–4, and 1–5. Calculate the calibration error as the sum of the absolute value of the mean difference and the 95 percent confidence coefficient for each of the three test attenuators using equation 1–6. Report the calibration error test results for each of the three attenuators.

(iii) System Response Time Check. Using a high-level calibration attenuator, alternately insert the filter five times and remove it from the external audit device. For each filter insertion and removal, measure the amount of time required for the COMS to display 95 percent of the step change in opacity on the COMS data recorder. For the upscale response time, measure the time from insertion to display of 95 percent of the final, steady upscale reading. For the downscale response time, measure the time from removal to display 5 percent of the initial upscale reading. Calculate the mean of the five upscale response time measurements and the mean of the five downscale response time measurements. Report both the upscale and downscale response times.

(iv) Averaging Period Calculation and Recording Check. After the calibration error check, conduct a check of the averaging period calculation (e.g., 6-minute integrated average). Consecutively insert each of the calibration error check attenuators (low, mid, and high-level) into the external audit device

for a period of two times the averaging period plus 1 minute (e.g., 13 minutes for a 6-minute averaging period). Compare the path length corrected opacity value of each attenuator to the valid average value calculated by the COMS data recording device for that attenuator.

(4) Operational Test Period. Before conducting the operational testing, you must have successfully completed the field audit tests described in sections 8.1(3)(i) through 8.1(3)(iv). Then, you operate the COMS for an initial 168-hour test period while the source is operating under normal operating conditions. If normal operations contain routine source shutdowns, include the source's down periods in the 168-hour operational test period. However, you must ensure that the following minimum source operating time is included in the operational test period: (1) For a batch operation, the operational test period must include at least one full cycle of batch operation during the 168-hour period unless the batch operation is longer than 168 hours or (2) for continuous operating processes, the unit must be operating for at least 50 percent of the 168-hour period. Except during times of instrument zero and upscale calibration drift checks, you must analyze the effluent gas for opacity and produce a permanent record of the COMS output. During this period, you may not perform unscheduled maintenance, repair, or adjustment to the COMS. Automatic zero and calibration adjustments (*i.e.,* intrinsic adjustments), made by the COMS without operator intervention or initiation, are allowable at any time. At the end of the operational test period, verify and record that the COMS optical alignment is still correct. If the test period is interrupted because of COMS failure, record the time when the failure occurred. After the failure is corrected, you restart the 168-hour period and tests from the beginning (0-hour). During the operational test period, perform the following test procedures:

(i) Zero Calibration Drift Test. At the outset of the 168-hour operational test period and at each 24-hour interval, the automatic calibration check system must initiate the simulated zero device to allow the zero drift to be determined. Record the COMS response to the simulated zero device. After each 24-hour period, subtract the COMS zero reading from the nominal value of the simulated zero device to calculate the 24-hour zero drift (ZD). At the end of the 168-hour period, calculate the arithmetic mean, standard deviation, and confidence coefficient of the 24-hour ZDs using equations 1–3, 1–4, and 1–5. Calculate the sum of the absolute value of the mean and the absolute value of the confidence coefficient using equation 1–6, and report this value as the 24-hour ZD error.

(ii) Upscale Calibration Drift Test. At each 24-hour interval after the simulated zero device value has been checked, check and record the COMS response to the upscale calibration device. After each 24-hour period, subtract the COMS upscale reading from the nominal value of the upscale calibration device to calculate the 24-hour calibration drift (CD). At the end of the 168-hour period, calculate the arithmetic mean, standard deviation, and confidence coefficient of the 24-hour CD using equations 1–3, 1–4, and 1–5. Calculate the sum of the absolute value of the mean and the absolute value of the confidence coefficient using equation 1–6, and report this value as the 24-hour CD error.

(5) Retesting. If the COMS fails to meet the specifications for the tests conducted under the operational test period, make the necessary corrections and restart the operational test period. Depending on the opinion of the enforcing agency, you may have to repeat some or all of the field audit tests.

8.2 What are the responsibilities of the Opacity Monitor Manufacturer?

You, the manufacturer, must carry out the following activities:

(1) Conduct the verification procedures for design specifications in section 6 of ASTM D 6216–98.

(2) Conduct the verification procedures for performance specifications in section 7 of ASTM D 6216–98.

(3) Provide to the owner or operator, a report of the opacity monitor's conformance to the design and performance specifications required in sections 6 and 7 of ASTM D 6216–98 in accordance with the reporting requirements of section 9 in ASTM D 6216–98.

9.0 What quality control measures are required by PS–1?

Opacity monitor manufacturers must initiate a quality program following the requirements of ASTM D 6216–98, section 8. The quality program must include (1) a quality system and (2) a corrective action program.

10.0 Calibration and Standardization [Reserved]

11.0 Analytical Procedure [Reserved]

12.0 What Calculations Are Needed for PS–1?

12.1 Desired Attenuator Values. Calculate the desired attenuator value corrected to the emission outlet pathlength as follows:

$$OP_2 = 1 - \left(1 - OP_1\right)^{\frac{L_2}{L_1}} \qquad \text{Eq. 1-1}$$

Where:

OP_1 = Nominal opacity value of required low-, mid-, or high-range calibration attenuators.

OP_2 = Desired attenuator opacity value from ASTM D 6216–98, section 7.5 at the opacity limit required by the applicable subpart.

L_1 = Monitoring pathlength.

L_2 = Emission outlet pathlength.

12.2 Luminous Transmittance Value of a Filter. Calculate the luminous transmittance of a filter as follows:

$$LT = \frac{\sum_{i=300_{nm}}^{i=800_{nm}} T_i}{100{,}000} \qquad \text{Eq. 1-2}$$

Where:

LT = Luminous transmittance

T_i = Weighted tested filter transmittance.

12.3 Arithmetic Mean. Calculate the arithmetic mean of a data set as follows:

$$\bar{x} = \frac{1}{n}\sum_{i=1}^{n} x_i \qquad \text{Eq. 1-3}$$

Where:

$\bar{x}$ = Arithmetic mean

n = Number of data points

$\sum_{i=1}^{n} x_i$ = Algebraic sum of the individual measurements, x_i.

12.4 Standard Deviation. Calculate the standard deviation as follows:

$$S_d = \sqrt{\frac{\sum_{i=1}^{n} x_i^2 - \frac{\left(\sum_{i=1}^{n} x_i\right)^2}{n}}{n-1}} \qquad \text{Eq. 1-4}$$

Where:

S_d = Standard deviation of a data set.

12.5 Confidence Coefficient. Calculate the 2.5 percent error confidence coefficient (one-tailed) as follows:

$$CC = \frac{t_{0.975} S_d}{\sqrt{n}} \qquad \text{Eq. 1-5}$$

Where:

CC = Confidence coefficient

$t_{0.975}$ = t-value (see table 1–2).

12.6 Calibration Error. Calculate the error (calibration error, zero drift error, and calibration drift error) as follows:

$$Er = |\bar{x}| + |CC| \qquad \text{Eq. 1-6}$$

Where:

Er = Error.

12.7 Conversion of Opacity Values for Monitor Pathlength to Emission Outlet Pathlength. When the monitor pathlength is different from the emission outlet pathlength, use either of the following equations to convert from one basis to the other (this conversion may be automatically calculated by the monitoring system):

$$\log\left(1-Op_2\right)=\frac{L_2}{L_1}\log\left(1-Op_1\right) \qquad \text{Eq. 1-7}$$

$$OD_2=\frac{L_2}{L_1}\times OD_1 \qquad \text{Eq. 1-8}$$

Where:

Op_1 = Opacity of the effluent based upon L_1.
Op_2 = Opacity of the effluent based upon L_2.
L_1 = Monitor pathlength.
L_2 = Emission outlet pathlength.
OD_1 = Optical density of the effluent based upon L_1.
OD_2 = Optical density of the effluent based upon L_2.

12.8 Mean Response Wavelength. Calculate the mean of the effective spectral response curve from the individual responses at the specified wavelength values as follows:

$$L=\frac{\sum_{i=1}^{n} L_i g_i}{\sum_{i=1}^{n} g_i} \qquad \text{Eq. 1-9}$$

Where:

L = mean of the effective spectral response curve
L_i = The specified wavelength at which the response g_i is calculated at 20 nm intervals.
g_i = The individual response value at L_i.

13.0 What Specifications Does a COMS Have To Meet for Certification?

A COMS must meet the following design, manufacturer's performance, and field audit performance specifications:

13.1 Design Specifications. The opacity monitoring equipment must comply with the design specifications of ASTM D 6216–98.

13.2 Manufacturer's Performance Specifications. The opacity monitor must comply with the manufacturer's performance specifications of ASTM D 6216–98.

13.3 Field Audit Performance Specifications. The installed COMS must comply with the following performance specifications:

(1) Optical Alignment. Objectively indicate proper alignment relative to reference marks (*e.g.,* bull's-eye) or conditions.

(2) Calibration Error. The calibration error must be ≤3 percent opacity for each of the three calibration attenuators.

(3) System Response Time. The COMS upscale and downscale response times must be ≤10 seconds as measured at the COMS data recorder.

(4) Averaging Period Calculation and Recording. The COMS data recorder must average and record each calibration attenuator value to within ±2 percent opacity of the certified value of the attenuator.

(5) Operational Test Period. The COMS must be able to measure and record opacity and to perform daily calibration drift assessments for 168 hours without unscheduled maintenance, repair, or adjustment.

(6) Zero and Upscale Calibration Drift Error. The COMS zero and upscale calibration drift error must not exceed 2 percent opacity over a 24 hour period.

14.0 Pollution Prevention. [Reserved]

15.0 Waste Management. [Reserved]

16.0 Which references are relevant to this method?

1. Experimental Statistics. Department of Commerce. National Bureau of Standards Handbook 91. Paragraph 3–3.1.4. 1963. 3–31 p.

2. Performance Specifications for Stationary Source Monitoring Systems for Gases and Visible Emissions, EPA–650/2–74–013, January 1974, U. S. Environmental Protection Agency, Research Triangle Park, NC.

3. Koontz, E.C., Walton, J. Quality Assurance Programs for Visible Emission Evaluations. Tennessee Division of Air Pollution Control. Nashville, TN. 78th Meeting of the Air Pollution Control Association. Detroit, MI. June 16–21, 1985.

4. Evaluation of Opacity CEMS Reliability and Quality Assurance Procedures. Volume 1. U. S. Environmental Protection Agency. Research Triangle Park, NC. EPA–340/1–86–009a.

5. Nimeroff, I. ''Colorimetry Precision Measurement and Calibration.'' NBS Special Publication 300. Volume 9. June 1972.

6. Technical Assistance Document: Performance Audit Procedures for Opacity Monitors. U. S. Environmental Protection Agency. Research Triangle Park, NC. EPA–600/8–87–025. April 1987.

7. Technical Assistance Document: Performance Audit Procedures for Opacity Monitors. U. S. Environmental Protection Agency. Research Triangle Park, NC. EPA–450/4–92–010. April 1992.

8. ASTM D 6216–98: Standard Practice for Opacity Monitor Manufacturers to Certify Conformance with Design and Performance Specifications. American Society for Testing and Materials (ASTM). April 1998.

17.0 What tables and diagrams are relevant to this method?

17.1 Reference Tables.

TABLE 1–1.—SOURCE C, HUMAN EYE RESPONSE FACTOR

Wavelength nanometers	Weighting factor [a]	Wavelength nanometers	Weighting factor [a]
380	0	590	6627
390	0	600	5316
400	2	610	4176
410	9	620	3153
420	37	630	2190
430	122	640	1443
440	262	650	886
450	443	660	504
460	694	670	259
470	1058	680	134
480	1618	690	62
490	2358	700	29
500	3401	720	14
510	4833	720	6
520	6462	730	3
530	7934	740	2
540	9194	750	1
550	9832	760	1
560	9841	770	0
570	9147	780	0

TABLE 1–1.—SOURCE C, HUMAN EYE RESPONSE FACTOR—Continued

Wavelength nanometers	Weighting factor [a]	Wavelength nanometers	Weighting factor [a]
580	7992		

[1] Total of weighting factors = 100,000.

TABLE 1–2. T VALUES

n [a]	t 0.975	n [a]	t 0.975	n [a]	t 0.975
2	12.706	7	2.447	12	2.201
3	4.303	8	2.365	13	2.179
4	3.182	9	2.306	14	2.160
5	2.776	10	2.262	15	2.145
6	2.571	11	2.228	16	2.131

[a] The values in this table are already corrected for n-1 degrees of freedom. Use n equal to the number of individual values.

17.2 Diagrams.

BILLING CODE 6560–50–P

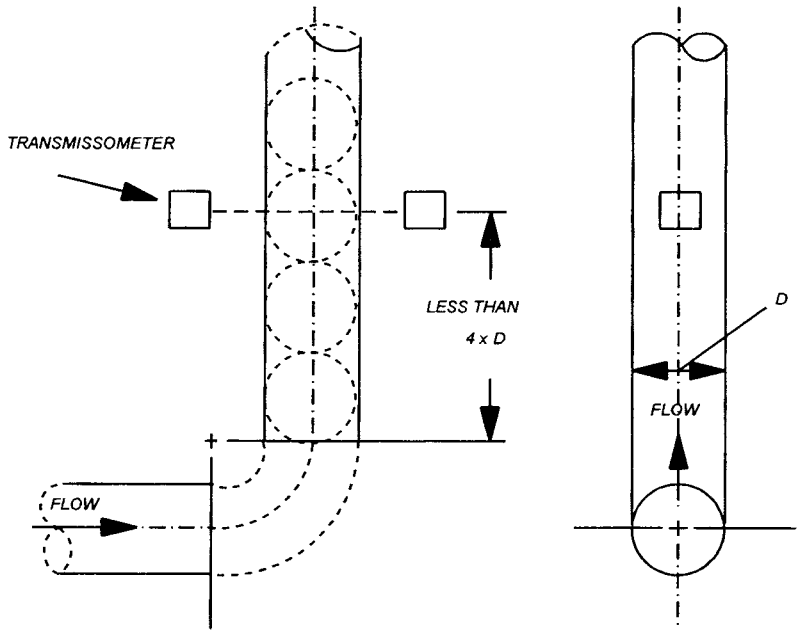

Figure 1-1. Transmissometer location downstream of a bend in a vertical stack.

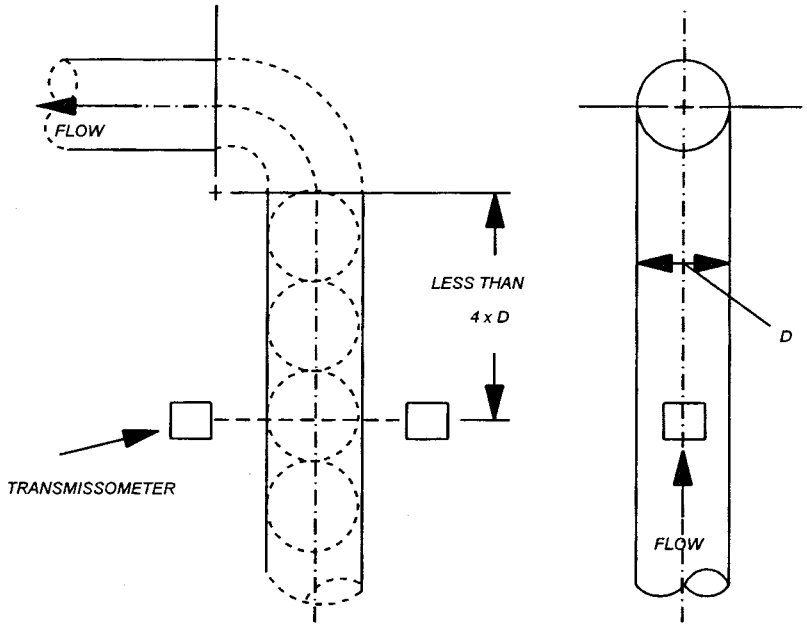

Figure 1-2. Transmissometer location upstream of a bend in a vertical stack.

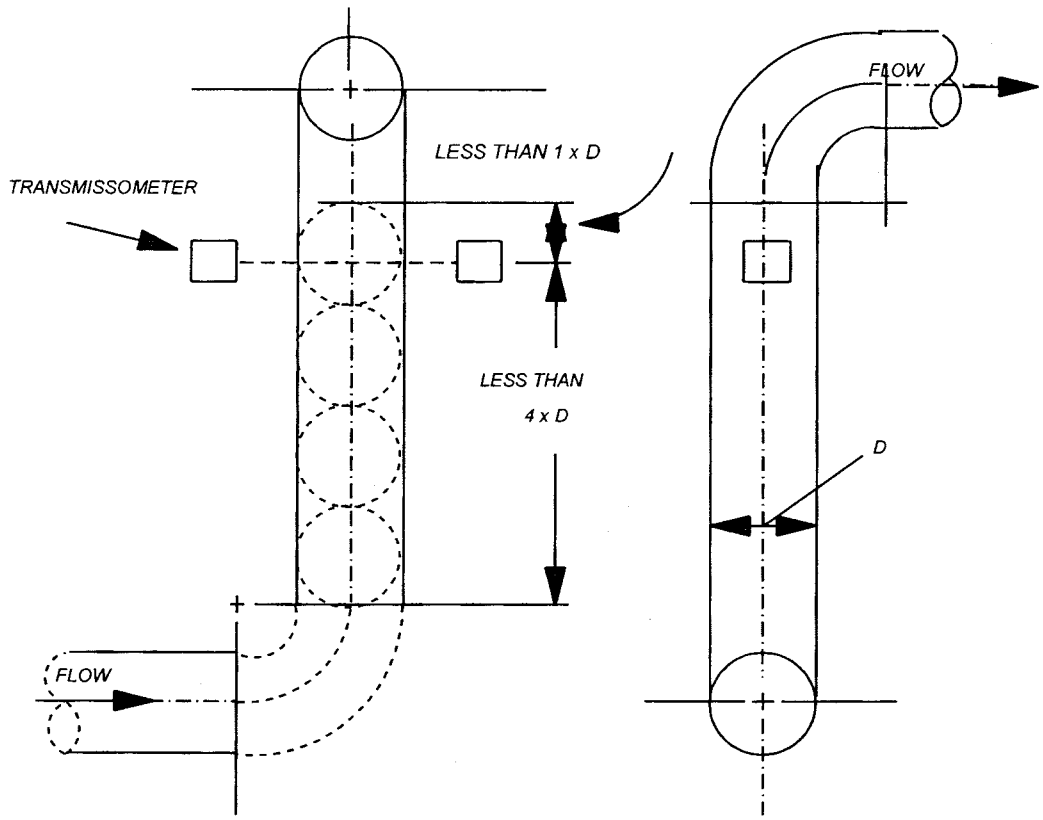

Figure 1-3. Transmissometer location between bends in a vertical stack.

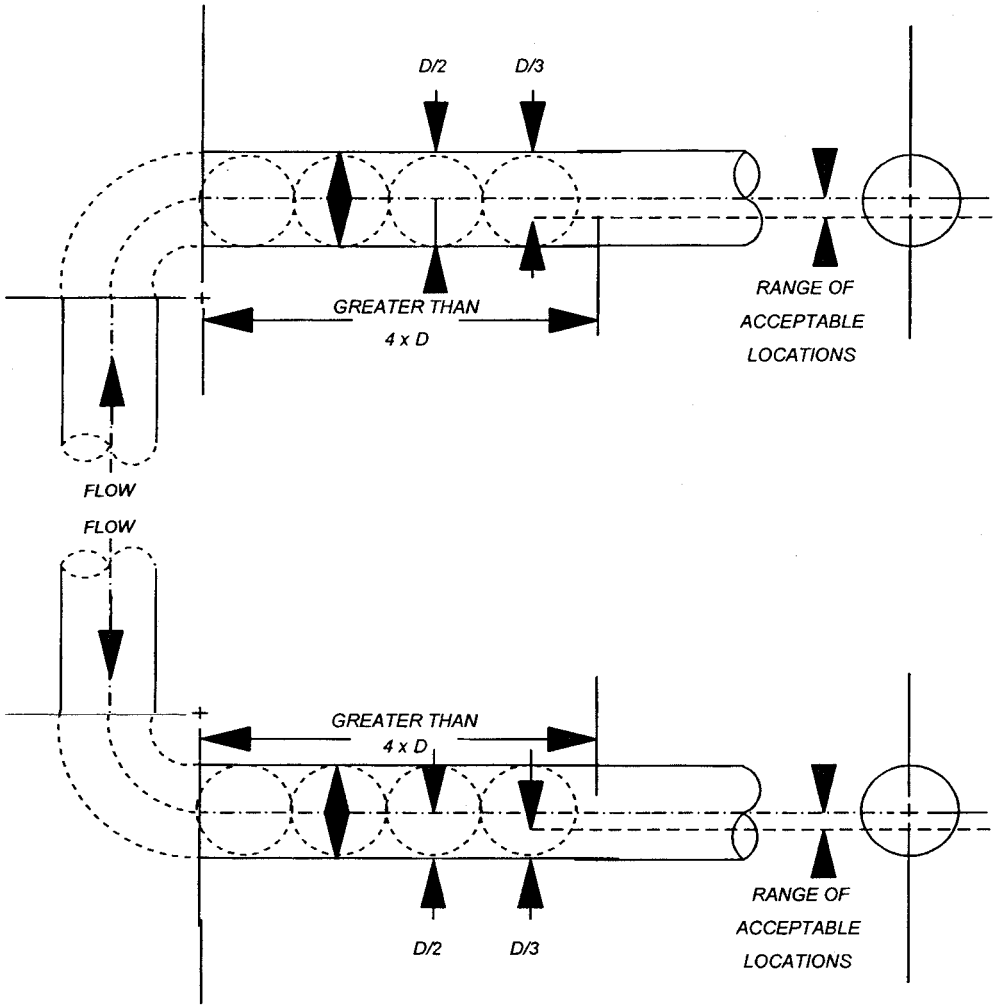

Figure 1-4. Transmissometer location greater than four diameters downstream of a vertical bend in a horizontal stack or duct.

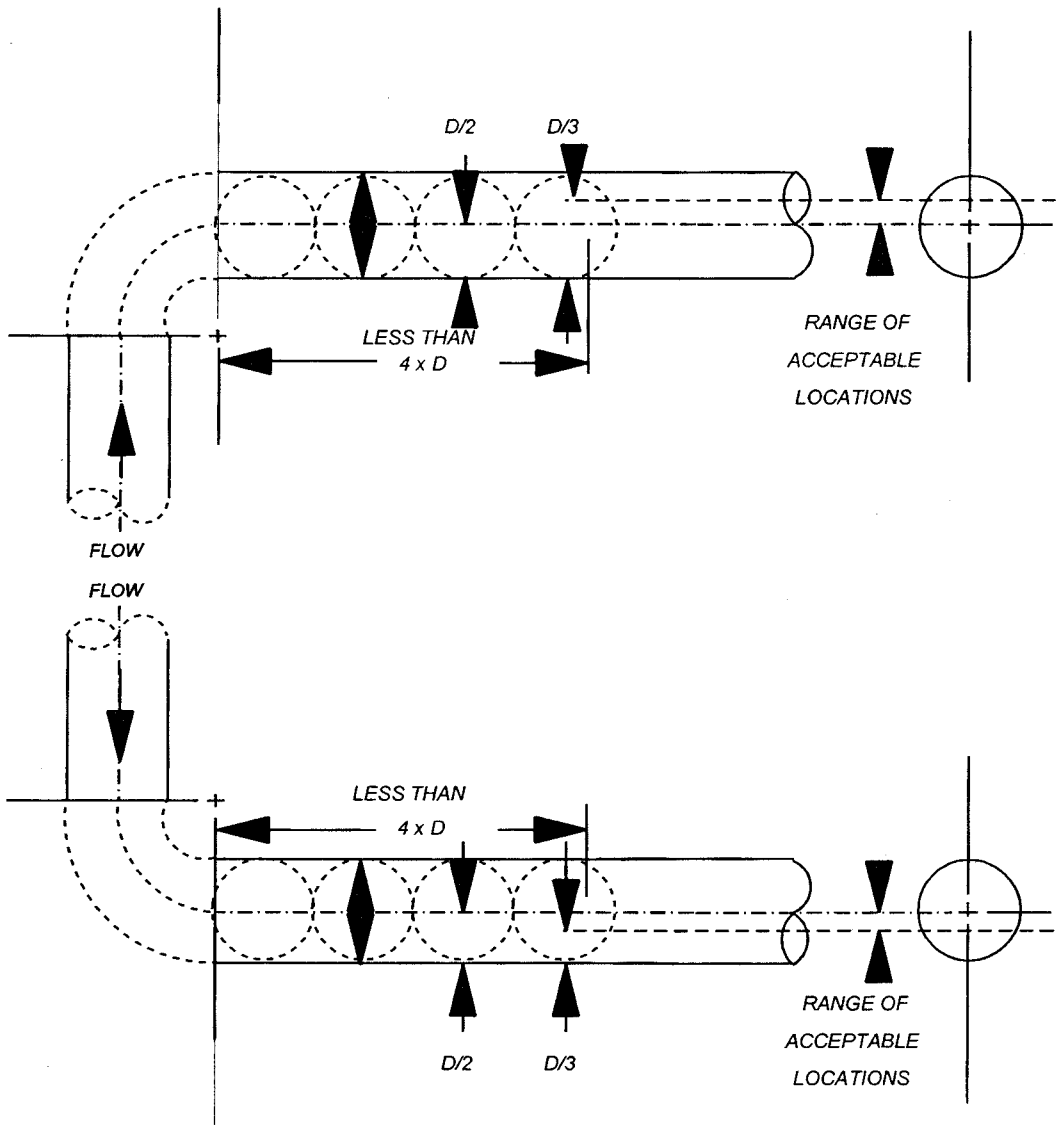

Figure 1-5. Transmissometer location less than four diameters downstream of a vertical bend in a horizontal stack or duct.

* * * * *

[FR Doc. 00–20021 Filed 8–9–00; 8:45 am]
BILLING CODE 6560–50–C

ENVIRONMENTAL PROTECTION AGENCY

40 CFR Part 300

[FRL–6844–3]

National Oil and Hazardous Substances Pollution Contingency Plan; National Priorities List Update

AGENCY: Environmental Protection Agency.

ACTION: Notice of deletion of the Schofield Army Barracks site from the national priorities list.

SUMMARY: The Environmental Protection Agency (EPA) Region 9 announces the deletion of the Schofield Army Barracks Site in Honolulu County, Oahu, Hawaii from the National Priorities List (NPL). The NPL constitutes Appendix B of 40 CFR part 300 which is the National Oil and Hazardous Substances Pollution Contingency Plan (NCP), which EPA promulgated pursuant to section 105 of the Comprehensive Environmental Response, Compensation and Liability Act (CERCLA) of 1980, as amended. EPA and the State of Hawaii Department of Health have determined that the Site poses no significant threat to public health or the environment and, therefore, no further remedial measures pursuant to CERCLA are appropriate.

EFFECTIVE DATE: August 10, 2000.

FOR FURTHER INFORMATION CONTACT: Mark Ripperda, USEPA Region 9, 75 Hawthorne Street, San Francisco, CA 94105, Mail Code SFD–8–3; phone (415) 744–2408.

SUPPLEMENTARY INFORMATION: The site to be deleted from the NPL is: Schofield Army Barracks, Honolulu County, Oahu, Hawaii.

A Notice of Intent to Delete for this site was published in the **Federal Register** on May 22, 2000 (65 FR 32058). The closing date for comments on the Notice of Intent to Delete was June 22, 2000. One comment was received from the public which supported the proposed deletion.

EPA identifies sites that appear to present a significant risk to public health, welfare, or the environment and it maintains the NPL as the list of those sites. Deletion of a site from the NPL does not affect responsible party liability or impede agency efforts to recover costs associated with response efforts. Section 300.425(e)(3) of the NCP states that whenever there is a significant release from a site deleted from the NPL, the site shall be restored to the NPL without application of the Hazard Ranking System.

List of Subjects in 40 CFR Part 300

Environmental protection, Air pollution control, Chemicals, Hazardous substances, Hazardous waste, Intergovernmental relations, Penalties, Reporting and recordkeeping requirements, Superfund, Water pollution control, Water supply.

Dated: July 5, 2000.

Felicia Marcus,

Regional Administrator, Region IX.

For the reasons set out in the preamble, 40 CFR part 300 is amended as follows:

PART 300—[AMENDED]

1. The authority citation for part 300 continues to read as follows:

Authority: 33 U.S.C. 1321(c)(2); 42 U.S.C. 9601–9657; E.O. 12777, 56 FR 54757, 3 CFR, 1991 Comp., p. 351; E.O. 12580, 52 FR 2923, 3 CFR, 1987 Comp., p.193.

Appendix B—[Amended]

2. Table 2 of Appendix B to part 300 is amended by removing the entry for ''Schofield Barracks (USARMY), Oahu, Hawaii''.

[FR Doc. 00–20120 Filed 8–9–00; 8:45 am]

BILLING CODE 6560–50–P

Proposed Rules

Federal Register
Vol. 65, No. 155
Thursday, August 10, 2000

This section of the FEDERAL REGISTER contains notices to the public of the proposed issuance of rules and regulations. The purpose of these notices is to give interested persons an opportunity to participate in the rule making prior to the adoption of the final rules.

DEPARTMENT OF TRANSPORTATION

Federal Aviation Administration

14 CFR Part 39

[Docket No. 99–CE–90–AD]

RIN 2120–AA64

Airworthiness Directives; DG Flugzeugbau GmbH Model DG-800B Sailplanes

AGENCY: Federal Aviation Administration, DOT.

ACTION: Notice of proposed rulemaking (NPRM).

SUMMARY: This document proposes to adopt a new airworthiness directive (AD) that would apply to certain DG Flugzeugbau (DG Flugzeugbau) GmbH Model DG 800B sailplanes. The proposed AD would require you to measure and correct improper propeller drive belt tension. The proposed AD is the result of mandatory continuing airworthiness information (MCAI) issued by the airworthiness authority for the Federal Republic of Germany. The actions specified in the proposed AD are intended to correct improper drive belt tension and consequent engine crankshaft or connecting rod bearing damage. Such damage could result in loss of propulsion during critical phases of flight.

DATES: The Federal Aviation Administration (FAA) must receive any comments on this proposed rule on or before September 11, 2000.

ADDRESSES: Submit comments in triplicate to the Federal Aviation Administration (FAA), Central Region, Office of the Regional Counsel, Attention: Rules Docket No. 99–CE–90–AD, 901 Locust, Room 506, Kansas City, Missouri 64106. You may inspect comments at this location between 8 a.m. and 4 p.m., Monday through Friday, except holidays.

Service information that applies to the proposed AD may be obtained from DG Flugzeugbau, Postbox 41 20, D–76646 Bruchsal, Federal Republic of Germany; telephone: +49 7257–890; facsimile: +49 7257–8922. You may examine this information at the Rules Docket at the address above.

FOR FURTHER INFORMATION CONTACT: Mike Kiesov, Aerospace Engineer, FAA, Small Airplane Directorate, 901 Locust, Room 301, Kansas City, Missouri 64016; telephone: (816) 329–4144; facsimile: (816) 329–4090.

SUPPLEMENTARY INFORMATION:

Comments Invited

How Do I Comment on This AD?

We invite your comments on the proposed rule. You may submit whatever written data, views, or arguments you choose. You need to include the rule's docket number and submit your comments in triplicate to the address specified under the caption **ADDRESSES**. We will consider all comments received on or before the closing date specified above, before acting on the proposed rule. We may change the proposals contained in this notice in light of the comments received.

Are There Any Specific Portions of the AD I Should Pay Attention to?

The FAA specifically invites comments on the overall regulatory, economic, environmental, and energy aspects of the proposed rule that might necessitate a need to modify the proposed rule. You may examine all comments we receive. We will file a report in the Rules Docket that summarizes each FAA contact with the public that concerns the substantive parts of this proposal.

The FAA is reexamining the writing style we currently use in regulatory documents, in response to the Presidential memorandum of June 1, 1998. That memorandum requires federal agencies to communicate more clearly with the public. We are interested in your comments on the ease of understanding this document, and any other suggestions you might have to improve the clarity of FAA communications that affect you. You can get more information about the Presidential memorandum and the plain language initiative at http://www.faa.gov/language/.

How Can I Be Sure FAA Receives My Comment?

If you want us to acknowledge the receipt of your comments, you must include a self-addressed, stamped postcard. On the postcard, write ''Comments to Docket No. 99-CE–90-AD.'' We will date stamp and mail the postcard back to you.

Discussion

What Events Have Caused This Proposed AD?

The Luftfahrt-Bundesamt (LBA), which is the airworthiness authority for the Federal Republic of Germany, recently notified the FAA that an unsafe condition may exist on all DG Flugzeugbau GmbH Model DG–800B sailplanes equipped with a SOLO engine. The LBA reports that 5 sailplanes had a broken crankshaft or connecting rod bearing failures. Improper drive belt tension caused the damage and failures.

What Happens If You Do Not Correct the Condition?

This condition, if not corrected, could result in loss of propulsion during critical phases of flight.

Relevant Service Information

Is There Service Information That Applies to This Subject?

DG Flugzeugbau has issued Technical Note (TN) 873/16, dated October 25, 1999.

What Are the Provisions of This Service Bulletin?

The service bulletin describes procedures for measuring drive belt tension, and specifies where you can obtain procedures for correcting improper tension.

What Actions Did LBA Take?

The LBA issued German AD Number 1999–377, dated December 2, 1999, referencing DG Flugzeugbau TN 873/16, in order to assure the continued airworthiness of these sailplanes in Germany.

Was This in Accordance With the Bilateral Airworthiness Agreement?

DG Flugzeugbau manufactured this sailplane model in Germany. The FAA type certificated the sailplane model for operation in the United States under the provisions of section 21.29 of the

Federal Aviation Regulations (14 CFR 21.29) and the applicable bilateral airworthiness agreement. Complying with this bilateral airworthiness agreement, the LBA informed the FAA of the situation described above.

The FAA's Determination and an Explanation of the Provisions of the Proposed AD

What Has FAA Decided?

The FAA has examined the findings of the LBA; reviewed all available information, including the service information referenced above, and determined that:

—the unsafe condition referenced in this document exists or could develop on other DG Flugzeugbau GmbH Model DG–800B sailplanes of the same type design that are equipped with SOLO engines;

—these sailplanes should have the actions specified in the above service bulletin incorporated; and

—the FAA should take AD action to correct this unsafe condition.

What Does This Proposed AD Require?

This proposed AD requires you to measure and correct improper propeller drive belt tension.

What Are the Differences Between the LBA AD and the Proposed AD?

The German AD requires measuring the drive belt tension within the next 25 hour time-in-service but no later than December 31, 1999, on the affected sailplanes registered in Germany. We propose a requirement that you measure drive belt tension within the next 25 hours time-in-service or 90 days after the effective date of the proposed AD, whichever occurs first.

Why Is the Compliance Time in Both Hours Time-in-Service and Calendar Time?

The unsafe condition described in this AD does not originate as a result of sailplane operation. Applying improper tension to the propeller belt drive can occur at any time. The condition worsens with sailplane operation, but could already exist now.

The compliance times afford the following:

—the 25 hours TIS provides that the high-usage sailplanes are inspected for improper tension in a reasonable time period; and

—the 90 day compliance time provides that improper tension does not go undetected for a long period of time on low-usage sailplanes.

Cost Impact

This Proposed AD Impacts How Many Sailplanes?

We estimate that the proposed AD would affect 6 sailplanes in the U.S. registry.

What Is the Cost Impact of the Proposed Measurement for the Affected Sailplanes on the U.S. Register?

We estimate that it would take approximately 3 workhours per sailplane to accomplish the proposed measurement, at an average labor rate of $60 an hour. Based on the cost factors presented above, we estimate the total cost impact of the proposed measurement on U.S. operators to be $180 per sailplane.

Regulatory Impact

How Does This AD Impact Relations Between Federal and State Governments?

The proposed regulations would not have substantial direct effects on the States, on the relationship between the national government and the States, or on the distribution of power and responsibilities among the various levels of government. We have determined that this proposed rule would not have federalism implications under Executive Order 13132.

How Does This AD Involve a Significant Rule or Regulatory Action?

For the reasons discussed above, I certify that this action (1) is not a ''significant regulatory action'' under Executive Order 12866; (2) is not a ''significant rule'' under Department of Transportation Regulatory Policies and Procedures (44 FR 11034, February 26, 1979); and (3) if put into effect, will not have a significant economic impact, positive or negative, on a substantial number of small entities under the criteria of the Regulatory Flexibility Act. We have placed a copy of the draft regulatory evaluation prepared for this action in the Rules Docket. You may obtain a copy of it by contacting the Rules Docket at the location provided under the caption **ADDRESSES**.

List of Subjects in 14 CFR Part 39

Air transportation, Aircraft, Aviation safety, Safety.

The Proposed Amendment

Accordingly, under the authority delegated to me by the Administrator, the Federal Aviation Administration proposes to amend part 39 of the Federal Aviation Regulations (14 CFR part 39) as follows:

PART 39—AIRWORTHINESS DIRECTIVES

1. The authority citation for part 39 continues to read as follows:

Authority: 49 U.S.C. 106(g), 40113, 44701.

§ 39.13 [Amended]

2. FAA amends Section 39.13 by adding a new airworthiness directive (AD) to read as follows:

DG Flugzeugbau GMBH: Docket No. 99–CE–90–AD.

(a) *What sailplanes are affected by this AD?* Model DG–800B sailplanes, all serial numbers, that are:

(1) certificated in any category; and

(2) equipped with SOLO engines.

(b) *Who must comply with this AD?* Anyone who wishes to operate any of the above sailplanes on the U.S. Register must comply with this AD.

(c) *What problem does this AD address?* Our intent is that the actions specified in the AD correct improper drive belt tension and consequent engine crankshaft or connecting rod bearing damage. Such damage could result in loss of propulsion during critical phases of flight.

(d) *What must I do to address this problem?* To address this problem, you must accomplish the following actions:

Actions	Compliance times	Procedures
(1) Measure the drive belt tension. The difference should be a minimum of 6 millimeters (mm) (0.236 inches (in)) and should not exceed 11 mm (0.433 in)	Within the next 25 hours time-in-service or 90 days after the effective date of the AD, whichever comes first	Follow the procedures in DG Flugzeugbau Technical Note (TN) 873/16, dated October 25, 1999, and the Maintenance Manual for DG–800B.

Actions	Compliance times	Procedures
(2) If you find improper tension as specified in this AD, accomplish the following: (i) Lower the tension if it is too high. Check the position of the propeller in relation to the engine compression point to assure it is within limits, and adjust if necessary (ii) If you have to reduce the drive belt tension, execute a ground test run. Check to assure that the position of the propeller in relation to the engine compression point has not changed, and adjust as necessary. If this has happened, the drive belt has slipped due to too low tension (iii) Notify DG Flugzeugbau if tension problems are still not resolved	Before operating the sailplane.	

(e) *Can I comply with this AD in any other way?* You may use an alternative method of compliance or adjust the compliance time if:

(1) Your alternative method of compliance provides an equivalent level of safety; and

(2) The Manager, Small Airplane Directorate approves your alternative. Submit your request through an FAA Principal Maintenance Inspector, who may add comments and then send it to the Manager, Small Airplane Directorate, 901 Locust, Room 301, Kansas City, Missouri 64106.

Note: This AD applies to each sailplane identified in paragraph (a) of this AD, regardless of whether it has been modified, altered, or repaired in the area subject to the requirements of this AD. For sailplanes that have been modified, altered, or repaired so that the performance of the requirements of this AD is affected, the owner/operator must request approval for an alternative method of compliance in accordance with paragraph (e) of this AD. You should include in the request an assessment of the effect of the modification, alteration, or repair on the unsafe condition addressed by this AD; and, if you have not eliminated the unsafe condition, specific actions you propose to address it.

(f) *Where can I get information about any already-approved alternative methods of compliance?* You can contact Mike Kiesov, Aerospace Engineer, FAA, Small Airplane Directorate, 901 Locust, Room 301, Kansas City, Missouri 64016; telephone: (816) 329–4144; facsimile: (816) 329–4090.

(g) *What if I need to fly the sailplane to another location to comply with this AD?* The FAA can issue a special flight permit under sections 21.197 and 21.199 of the Federal Aviation Regulations (14 CFR 21.197 and 21.199) to operate your sailplane to a location where you can accomplish the requirements of this AD.

(h) *How do I get copies of the documents referenced in this AD?* You may obtain copies of the documents referenced in this AD from DG Flugzeugbau, Postbox 41 20, D–76646 Bruchsal, Federal Republic of Germany; telephone: +49 7257–890; facsimile: +49 7257–8922. You may examine these documents at FAA, Central Region, Office of the Regional Counsel, 901 Locust, Room 506, Kansas City, Missouri 64106.

Issued in Kansas City, Missouri, on August 3, 2000.

Michael Gallagher,

Manager, Small Airplane Directorate, Aircraft Certification Service.

[FR Doc. 00–20251 Filed 8–9–00; 8:45 am]

BILLING CODE 4910–13–P

DEPARTMENT OF TRANSPORTATION

Federal Aviation Administration

14 CFR Part 39

[Docket No. 2000–CE–12–AD]

RIN 2120–AA64

Airworthiness Directives; British Aerospace HP137 Mk1, Jetstream Series 200, and Jetstream Models 3101 and 3201 Airplanes

AGENCY: Federal Aviation Administration, DOT.

ACTION: Notice of proposed rulemaking (NPRM).

SUMMARY: This document proposes to adopt a new airworthiness directive (AD) that would apply to certain British Aerospace HP137 Mk1, Jetstream series 200, and Jetstream Models 3101 and 3201 airplanes. The proposed AD would require you to inspect the rudder quadrant support structure for cracks and correct D-washer installation; and would require you to replace any cracked component and replace any incorrectly installed D-washers. The proposed AD is the result of mandatory continuing airworthiness information (MCAI) issued by the airworthiness authority for the United Kingdom. The actions specified by the proposed AD are intended to detect, correct, and prevent further cracking in the rudder quadrant structure caused by incorrectly installed D-washers. Cracks in this structure could result in loss of rudder control with consequent airplane control problems.

DATES: The Federal Aviation Administration (FAA) must receive any comments on this proposed rule on or before September 15, 2000.

ADDRESSES: Submit comments in triplicate to the FAA, Central Region, Office of the Regional Counsel, Attention: Rules Docket No. 2000–CE–12–AD, 901 Locust, Room 506, Kansas City, Missouri 64106. Comments may be inspected at this location between 8 a.m. and 4 p.m., Monday through Friday, holidays excepted.

You may get the service information referenced in the proposed AD from British Aerospace Regional Aircraft, Prestwick International Airport, Ayrshire, KA9 2RW, Scotland; telephone: (01292) 479888; facsimile: (01292) 479703. You may examine this information at the Rules Docket at the address above.

FOR FURTHER INFORMATION CONTACT: Mr. S.M. Nagarajan, Aerospace Engineer, FAA, Small Airplane Directorate, 901 Locust, Room 301, Kansas City, Missouri 64106; telephone: (816) 329–4145; facsimile: (816) 329–4090.

SUPPLEMENTARY INFORMATION:

Comments Invited

How Do I Comment on the Proposed AD?

The FAA invites comments on this proposed rule. You may submit whatever written data, views, or arguments you choose. You need to include the rule's docket number and submit your comments in triplicate to

the address specified under the caption **ADDRESSES**. The FAA will consider all comments received on or before the closing date. We may amend the proposed rule in light of comments received. Factual information that supports your ideas and suggestions is extremely helpful in evaluating the effectiveness of the proposed AD action and determining whether we need to take additional rulemaking action.

Are There Any Specific Portions of the AD I Should Pay Attention To?

The FAA specifically invites comments on the overall regulatory, economic, environmental, and energy aspects of the proposed rule that might suggest a need to modify the rule. You may examine all comments we receive before and after the closing date of the rule in the Rules Docket. We will file a report in the Rules Docket that summarizes each FAA contact with the public that concerns the substantive parts of the proposed AD.

We are re-examining the writing style we currently use in regulatory documents, in response to the Presidential memorandum of June 1, 1998. That memorandum requires federal agencies to communicate more clearly with the public. We are interested in your comments on whether the style of this document is clearer, and any other suggestions you might have to improve the clarity of FAA communications that affect you. You can get more information about the Presidential memorandum and the plain language initiative at *http://www.plainlanguage.gov*.

How Can I Be Sure FAA Receives My Comment?

If you want us to acknowledge the receipt of your comments, you must include a self-addressed, stamped postcard. On the postcard, write ''Comments to Docket No. 2000–CE–12–AD.'' We will date stamp and mail the postcard back to you.

Discussion

What Events Have Caused This Proposed AD?

The Civil Aviation Authority (CAA), which is the airworthiness authority for the United Kingdom, recently notified the FAA that an unsafe condition may exist on certain British Aerospace HP137 Mk1, Jetstream series 200, and Jetstream Models 3101 and 3201 airplanes. The CAA reports two incidents of cracks in the upper edge member radii and bottom diaphragm radii of the rudder quadrant support structure.

Investigation of these incidents revealed that the D-washers in the rudder quadrant support structure were installed incorrectly. These D-washers, when installed correctly, are designed to reinforce the bend radii of the affected structure.

What Are the Consequences if the Condition Is Not Corrected?

Cracks in the rudder quadrant support structure, if not detected and corrected, could result in loss of rudder control with consequent airplane control problems.

Is There Service Information That Applies to This Subject?

British Aerospace has issued Mandatory Alert Service Bulletin 53–JA–990842, Revision 1, dated February 21, 2000.

What Are the Provisions of This Service Bulletin?

The service bulletin describes procedures for:

—inspecting the upper edge member and bottom diaphragm of the rudder quadrant support structure for cracks and correct D-washer installation;
—replacing any component with cracks in it; and
—replacing any incorrectly installed D-washers.

What Action Did the CAA Take?

The CAA classified this service bulletin as mandatory and issued British AD Number 006–12–99 in order to assure the continued airworthiness of these airplanes in the United Kingdom.

Was This in Accordance With the Bilateral Airworthiness Agreement?

These airplane models are manufactured in the United Kingdom and are type certificated for operation in the United States under the provisions of section 21.29 of the Federal Aviation Regulations (14 CFR 21.29) and the applicable bilateral airworthiness agreement. Pursuant to this bilateral airworthiness agreement, the CAA has kept the FAA informed of the situation described above.

The FAA's Determination and an Explanation of the Provisions of the Proposed AD

What Has FAA Decided?

The FAA has examined the findings of the CAA; reviewed all available information, including the service information referenced above; and determined that:

—The unsafe condition referenced in this document exists or could develop on other British Aerospace HP137 Mk1, Jetstream series 200, and Jetstream Models 3101 and 3201 airplanes of the same type design;
—The actions specified in the above-referenced service bulletin should be incorporated on these airplanes; and
—AD action should be taken in order to correct this unsafe condition.

What Does This Proposed AD Require?

This proposed AD would require you to inspect the rudder quadrant support structure for cracks and correct D-washer installation; and would require you to replace any cracked component and replace any incorrectly installed D-washers.

Compliance Time

What Is the Compliance Time of the Proposed AD?

The compliance time of this proposed AD would be ''within 90 calendar days after the effective date of this AD.''

Why Is the Compliance in Calendar Time Instead of Hours Time-in-Service (TIS)?

The cracks in the rudder quadrant support structure occur as a direct result of airplane operation if the D-washers are incorrectly installed. Because the D-washers could have been incorrectly installed in the field or at the factory, the problem has the same chance of occurring on an airplane with 50 hours TIS as one with 5,000 hours TIS. Therefore, we believe that 90 calendar days will:

—Assure that the unsafe condition does not go undetected for a long period of time on the affected airplanes; and
—Will not inadvertently ground any of the affected airplanes.

Cost Impact

How Many Airplanes Does This Proposed AD Impact?

We estimate that the proposed AD would affect 264 airplanes in the U.S. registry.

What Is the Cost Impact of the Proposed Actions for the Affected Airplanes on the U.S. Register?

We estimate that it would take approximately 1 workhour per airplane to accomplish the proposed inspection of the rudder quadrant support structure and the D-washers, at an average labor rate of $60 an hour. Based on the figures presented above, the total cost impact of the proposed inspection on U.S. operators is estimated to be $15,840, or $60 per airplane.

Costs for any necessary replacements are as follows:

Action	No. of workhours	Parts cost	Total cost per airplane
Right upper edge member replacement	8 workhours at $60 per hour	$514	$994
Lower diaphragm replacement	8 workhours at $60 per hour	760	1240
D-washer replacement	4 workhours at $60 per hour	250	490

Regulatory Impact

How Does This Proposed AD Impact Various Entities?

The regulations proposed herein would not have a substantial direct effect on the States, on the relationship between the national government and the States, or on the distribution of power and responsibilities among the various levels of government. Therefore, it is determined that this proposed rule would not have federalism implications under Executive Order 13132.

Does This Proposed AD Involve a Significant Rule or Regulatory Action?

For the reasons discussed above, I certify that this proposed action (1) is not a ''significant regulatory action'' under Executive Order 12866; (2) is not a ''significant rule'' under DOT Regulatory Policies and Procedures (44 FR 11034, February 26, 1979); and (3) if promulgated, will not have a significant economic impact, positive or negative, on a substantial number of small entities under the criteria of the Regulatory Flexibility Act. A copy of the draft regulatory evaluation prepared for this action has been placed in the Rules Docket. A copy of it may be obtained by contacting the Rules Docket at the location provided under the caption **ADDRESSES.**

List of Subjects in 14 CFR Part 39

Air transportation, Aircraft, Aviation safety, Safety.

The Proposed Amendment

Accordingly, pursuant to the authority delegated to me by the Administrator, the Federal Aviation Administration proposes to amend part 39 of the Federal Aviation Regulations (14 CFR part 39) as follows:

PART 39—AIRWORTHINESS DIRECTIVES

1. The authority citation for part 39 continues to read as follows:

Authority: 49 U.S.C. 106(g), 40113, 44701.

§ 39.13 [Amended]

2. Section 39.13 is amended by adding a new airworthiness directive (AD) to read as follows:

British Aerospace: Docket No. 2000–CE–12–AD.

(a) *What airplanes are affected by this AD?* HP137 Mk1, Jetstream Series 200, and Jetstream Models 3101 and 3201 airplanes, all serial numbers excluding 936 and 940, certificated in any category.

(b) *Who must comply with this AD?* Anyone who wishes to operate any of the above airplanes on the U.S. Register must comply with this AD.

(c) *What problem does this AD address?* The actions specified by this AD are intended to detect, correct, and prevent further cracking in the rudder quadrant structure caused by incorrectly installed D-washers. Cracks in this structure could result in loss of rudder control with consequent airplane control problems.

(d) *What must I do to address this problem?* To address this problem, you must accomplish the following actions:

Actions	Compliance times	Procedures
(1) Inspect the upper edge member radi and bottom diaphragm radii adjacent to the rudder artificial feel assembly attachments at the rudder quadrant support for cracks and inspect the D-washers to assure correct installation.	Within 90 calendar days after the effective date of this AD.	Accomplish in accordance with the ''ACCOMPLISHMENT INSTRUCTIONS: Part 1—Inspection'' section of British Aerospace Mandatory Alert Service Bulletin 53–JA–990842, Revision 1, dated February 21, 2000.
(2) If cracks are found in the area of the upper edge member radii on the rudder quadrant support structure, replace this component by incorporating material Kit No. '53–JA–990842PT2'.	Before further flight after the inspection where the cracked part was detected.	Accomplish in accordance with the ''ACCOMPLISHMENT INSTRUCTIONS: Part 2—Replacement of the right upper edge member if cracks are found at Part 1'' section of British Aerospace Mandatory Alert Service Bulletin 53–JA–990842, Revision 1, dated February 21, 2000.
(3) If cracks are found in the area of the bottom diaphragm on the rudder quadrant support structure, replace this component by incorporating material Kit No. '53–JA–990842PT3'.	Before further flight after the inspection where the cracked part was detected.	Accomplish in accordance with the ''ACCOMPLISHMENT INSTRUCTIONS: Part 3—Replacement of the bottom diaphragm of the rudder quadrant support structure'' section of British Aerospace Mandatory Alert Service Bulletin 53–JA–990842, Revision 1, dated February 21, 2000.
(4) Remove any incorrectly installed D-washer and replace with a new D-washer. This replacement is accomplished by incorporating material Kit No. '53–JA–990842PT4'.	Before further flight after the inspection where the incorrect installation was detected.	Accomplish in accordance with the ''ACCOMPLISHMENT INSTRUCTIONS: Part 4—Removal and replacement of D-washers'' section of British Aerospace Mandatory Alert Service Bulletin 53–JA–990842, Revision 1, dated February 21, 2000.

(e) *Can I comply with this AD in any other way?* You may use an alternative method of compliance or adjust the compliance time if:

(1) Your alternative method of compliance provides an equivalent level of safety; and

(2) The Manager, Small Airplane Directorate approves your alternative. Submit your request through an FAA Principal Maintenance Inspector, who may add comments and then send it to the Manager, Small Airplane Directorate, 901 Locust, Room 301, Kansas City, Missouri 64106.

Note: This AD applies to each airplane identified in paragraph (a) of this AD, regardless of whether it has been modified, altered, or repaired in the area subject to the requirements of this AD. For airplanes that have been modified, altered, or repaired so that the performance of the requirements of this AD is affected, the owner/operator must request approval for an alternative method of

compliance in accordance with paragraph (e) of this AD. The request should include an assessment of the effect of the modification, alteration, or repair on the unsafe condition addressed by this AD; and, if you have not eliminated the unsafe condition, specific actions you propose to address it.

(f) *Where can I get information about any already-approved alternative methods of compliance?* You may contact S.M. Nagarajan, Aerospace Engineer, FAA, Small Airplane Directorate, 901 Locust, Room 301, Kansas City, Missouri 64106; telephone: (816) 329–4145; facsimile: (816) 329–4090.

(g) *What if I need to fly the airplane to another location to comply with this AD?* The FAA can issue a special flight permit under sections 21.197 and 21.199 of the Federal Aviation Regulations (14 CFR 21.197 and 21.199) to operate your airplane to a location where you can accomplish the requirements of this AD.

(h) *How do I get copies of the documents referenced in this AD?* You may obtain copies of the documents referenced in this AD from British Aerospace Regional Aircraft, Prestwick International Airport, Ayrshire, KA9 2RW, Scotland; telephone: (01292) 479888; facsimile: (01292) 479703. Or may examine this document at FAA, Central Region, Office of the Regional Counsel, 901 Locust, Room 506, Kansas City, Missouri 64106.

Note: The subject of this AD is addressed in British AD Number 006–12–99.

Issued in Kansas City, Missouri, on August 3, 2000.

Michael Gallagher,

Manager, Small Airplane Directorate, Aircraft Certification Service.

[FR Doc. 00–20250 Filed 8–9–00; 8:45 am]

BILLING CODE 4910–13–P

DEPARTMENT OF TRANSPORTATION

Federal Aviation Administration

14 CFR Part 39

[Docket No. 2000–SW–14–AD]

Airworthiness Directives; Eurocopter France Model SA330F, G, and J Helicopters

AGENCY: Federal Aviation Administration, DOT.

ACTION: Notice of proposed rulemaking (NPRM).

SUMMARY: This document proposes the supersedure of an existing airworthiness directive (AD) for Eurocopter France Model SA330F, G, and J helicopters. That AD requires inspecting the tail rotor blade (blade) skin for cracks and replacing, as necessary, the blade. This action would require skin bonding and eddy current inspections of the blade skin for cracks and would reference a more recent service bulletin (SB). This proposal is prompted by improved inspection methods and by the manufacturer revising the SB referenced in the current AD. The actions specified by the proposed AD are intended to prevent fatigue cracking of a blade, failure of a blade, and subsequent loss of control of the helicopter.

DATES: Comments must be received on or before October 10, 2000.

ADDRESSES: Submit comments in triplicate to the Federal Aviation Administration (FAA), Office of the Regional Counsel, Southwest Region, Attention: Rules Docket No. 2000–SW–14–AD, 2601 Meacham Blvd., Room 663, Fort Worth, Texas 76137. You may also send comments electronically to the Rules Docket at the following address: 9-asw-adcomments@faa.gov. Comments may be inspected at the Office of the Regional Counsel between 9 a.m. and 3 p.m., Monday through Friday, except Federal holidays.

The service information referenced in the proposed rule may be obtained from American Eurocopter Corporation, 2701 Forum Drive, Grand Prairie, Texas 75053–4005, telephone (972) 641–3460, fax (972) 641–3527. This information may be examined at the FAA, Office of the Regional Counsel, Southwest Region, 2601 Meacham Blvd., Room 663, Fort Worth, Texas.

FOR FURTHER INFORMATION CONTACT: Jim Grigg, Aviation Safety Engineer, FAA, Rotorcraft Directorate, Regulations Group, Fort Worth, Texas 76193–0111, telephone (817) 222–5490, fax (817) 222–5961.

SUPPLEMENTARY INFORMATION:

Comments Invited

Interested persons are invited to participate in the making of the proposed rule by submitting such written data, views, or arguments as they may desire. Communications should identify the Rules Docket number and be submitted in triplicate to the address specified above. All communications received on or before the closing date for comments, specified above, will be considered before taking action on the proposed rule. The proposals contained in this notice may be changed because of the comments received.

Comments are specifically invited on the overall regulatory, economic, environmental, and energy aspects of the proposed rule. All comments submitted will be available in the Rules Docket for examination by interested persons. A report summarizing each FAA-public contact concerned with the substance of this proposal will be filed in the Rules Docket.

Commenters wishing the FAA to acknowledge receipt of their mailed comments submitted in response to this notice must submit a self-addressed, stamped postcard on which the following statement is made: ''Comments to Docket No. 2000–SW–14–AD.'' The postcard will be date stamped and returned to the commenter.

Availability of NPRMs

You may obtain a copy of this NPRM by submitting a request to the FAA, Office of the Regional Counsel, Attention: Rules Docket No. 2000–SW–14–AD, 2601 Meacham Blvd., Room 663, Fort Worth, Texas 76137.

Discussion

On May 23, 1980, the FAA issued AD 80–12–04, Amendment 39–3790 (45 FR 37180, June 2, 1980), to require repetitive inspections of each blade skin for cracks and replacement, as necessary, of the blade to prevent fatigue failure. That action was prompted by the loss of a blade. The requirements of that AD are intended to prevent loss of directional control of the helicopter.

Since the issuance of that AD, Aerospatiale SB 05.71R4, dated December 18, 1990, (SB 05.71R4) replaced Aerospatiale SB No. 05.59R2, dated November 18, 1982 (SB 05.59R2). Since SB 05.59R2 is canceled, the actions in this AD would be accomplished in accordance with SB 05.71R4.

We have identified an unsafe condition that is likely to exist or develop on other Eurocopter France Model SA330F, G, and J helicopters of these same type designs. The proposed AD would supersede AD 80–12–04 and contain the same inspection requirements but would extend the repetitive inspection interval from 5 hours time-in-service (TIS) to 15 or 30 hours TIS depending on whether a deicing system is installed.

The FAA estimates that 4 helicopters of U.S. registry would be affected by this proposed AD, that it would take approximately 1.5 work hours per helicopter to accomplish the proposed actions, and that the average labor rate is $60 per work hour. Based on these figures, the total cost impact of the proposed AD on U.S. operators is estimated to be $360.

The regulations proposed herein would not have a substantial direct effect on the States, on the relationship between the national Government and the States, or on the distribution of power and responsibilities among the various levels of government. Therefore,

it is determined that this proposal would not have federalism implications under Executive Order 13132.

For the reasons discussed above, I certify that this proposed regulation (1) is not a ''significant regulatory action'' under Executive Order 12866; (2) is not a ''significant rule'' under the DOT Regulatory Policies and Procedures (44 FR 11034, February 26, 1979); and (3) if promulgated, will not have a significant economic impact, positive or negative, on a substantial number of small entities under the criteria of the Regulatory Flexibility Act. A copy of the draft regulatory evaluation prepared for this action is contained in the Rules Docket. A copy of it may be obtained by contacting the Rules Docket at the location provided under the caption ''ADDRESSES.''

List of Subjects in 14 CFR Part 39

Air transportation, Aircraft, Aviation safety, Safety.

The Proposed Amendment

Accordingly, pursuant to the authority delegated to me by the Administrator, the Federal Aviation Administration proposes to amend part 39 of the Federal Aviation Regulations (14 CFR part 39) as follows:

PART 39—AIRWORTHINESS DIRECTIVES

1. The authority citation for part 39 continues to read as follows:

Authority: 49 U.S.C. 106(g), 40113, 44701.

§ 39.13 [Amended]

2. Section 39.13 is amended by removing Amendment 39–3790 (45 FR 37130, June 2, 1980) and by adding a new airworthiness directive (AD), to read as follows:

Eurocopter France: Docket No. 2000–SW–14–AD. Supersedes AD 80–12–04, Amendment 39–3790, Docket No. 20384.

Applicability: Model SA330F, G, and J helicopters with a tail rotor blade (blade), part number (P/N) 330A12–0000–(all dash numbers), 330A12–0005–(all dash numbers), 330A12–0006–(all dash numbers), installed, certificated in any category.

Note 1: This AD applies to each helicopter identified in the preceding applicability provision, regardless of whether it has been otherwise modified, altered, or repaired in the area subject to the requirements of this AD. For helicopters that have been modified, altered, or repaired so that the performance of the requirements of this AD is affected, the owner/operator must request approval for an alternative method of compliance in accordance with paragraph (b) of this AD. The request should include an assessment of the effect of the modification, alteration, or repair on the unsafe condition addressed by this AD; and if the unsafe condition has not been eliminated, the request should include specific proposed actions to address it.

Compliance: Required as indicated, unless accomplished previously.

To prevent fatigue cracking of a blade, failure of a blade, and subsequent loss of control of the helicopter, accomplish the following:

(a) Within 30 hours time-in-service (TIS), and thereafter at intervals not to exceed 15 hours TIS for blades equipped with deicing systems or 30 hours TIS for blades without deicing systems, conduct skin bonding and eddy current inspections on each affected blade for skin bonding and a crack. Inspect in accordance with paragraph 1.C of Aerospatiale Service Bulletin 05.71R4, dated December 18, 1990. Replace any blade failing the skin bonding inspection or eddy current inspection before further flight.

(b) An alternative method of compliance or adjustment of the compliance time that provides an acceptable level of safety may be used if approved by the Manager, Regulations Group, Rotorcraft Directorate, FAA. Operators shall submit their requests through an FAA Principal Maintenance Inspector, who may concur or comment and then send it to the Manager, Regulations Group.

Note 2: Information concerning the existence of approved alternative methods of compliance with this AD, if any, may be obtained from the Regulations Group.

(c) Special flight permits may be issued in accordance with sections 21.197 and 21.199 of the Federal Aviation Regulations (14 CFR 21.197 and 21.199) to operate the helicopter to a location where the requirements of this AD can be accomplished.

Issued in Fort Worth, Texas, on August 2, 2000.

Henry A. Armstrong,

Manager, Rotorcraft Directorate, Aircraft Certification Service.

[FR Doc. 00–20249 Filed 8–9–00; 8:45 am]

BILLING CODE 4910–13–P

DEPARTMENT OF TRANSPORTATION

Federal Aviation Administration

14 CFR Part 39

[Docket No. 98–NM–11–AD]

RIN 2120–AA64

Airworthiness Directives; Boeing Model 737 Series Airplanes

AGENCY: Federal Aviation Administration, DOT.

ACTION: Supplemental notice of proposed rulemaking; reopening of comment period.

SUMMARY: This document revises an earlier proposed airworthiness directive (AD), applicable to certain Boeing Model 737 series airplanes, that would have required inspections of certain bonded skin panels to detect delamination of the skin doublers (tear straps) from the skin panels; and follow-on corrective actions, if necessary. That proposal was prompted by reports that certain skin doublers were delaminated from their skin panels due to improper processing of certain skin panels. This new action would revise the proposed rule by referencing new service information that incorporates new inspection procedures and corrective actions, and recommends new compliance times. This new action also would remove airplanes from the applicability. The actions specified by this new proposed AD are intended to prevent skin doublers from delaminating from their skin panels, which could result in fatigue cracks in the skin doublers and skin panels, and consequent rapid decompression of the airplane.

DATES: Comments must be received by September 5, 2000.

ADDRESSES: Submit comments in triplicate to the Federal Aviation Administration (FAA), Transport Airplane Directorate, ANM–114, Attention: Rules Docket No. 98–NM–11–AD, 1601 Lind Avenue, SW., Renton, Washington 98055–4056. Comments may be inspected at this location between 9:00 a.m. and 3:00 p.m., Monday through Friday, except Federal holidays. Comments may be submitted via fax to (425) 227–1232. Comments may also be sent via the Internet using the following address: 9-anm-nprmcomment@faa.gov. Comments sent via fax or the Internet must contain ''Docket No. 98–NM–11–AD'' in the subject line and need not be submitted in triplicate. Comments sent via the Internet as attached electronic files must be formatted in Microsoft Word 97 for Windows or ASCII text.

The service information referenced in the proposed rule may be obtained from Boeing Commercial Airplane Group, P.O. Box 3707, Seattle, Washington 98124–2207. This information may be examined at the FAA, Transport Airplane Directorate, 1601 Lind Avenue, SW., Renton, Washington.

FOR FURTHER INFORMATION CONTACT: Nenita Odesa, Aerospace Engineer, Airframe Branch, ANM–120S, FAA, Transport Airplane Directorate, Seattle Aircraft Certification Office, 1601 Lind Avenue, SW., Renton, Washington 98055–4056; telephone (425) 227–2557; fax (425) 227–1181.

SUPPLEMENTARY INFORMATION:

Comments Invited

Interested persons are invited to participate in the making of the proposed rule by submitting such

written data, views, or arguments as they may desire. Communications shall identify the Rules Docket number and be submitted in triplicate to the address specified above. All communications received on or before the closing date for comments, specified above, will be considered before taking action on the proposed rule. The proposals contained in this notice may be changed in light of the comments received.

Comments are specifically invited on the overall regulatory, economic, environmental, and energy aspects of the proposed rule. All comments submitted will be available, both before and after the closing date for comments, in the Rules Docket for examination by interested persons. A report summarizing each FAA-public contact concerned with the substance of this proposal will be filed in the Rules Docket.

Commenters wishing the FAA to acknowledge receipt of their comments submitted in response to this notice must submit a self-addressed, stamped postcard on which the following statement is made: ''Comments to Docket Number 98–NM–11–AD.'' The postcard will be date stamped and returned to the commenter.

Availability of NPRMs

Any person may obtain a copy of this NPRM by submitting a request to the FAA, Transport Airplane Directorate, ANM–114, Attention: Rules Docket No. 98–NM–11–AD, 1601 Lind Avenue, SW., Renton, Washington 98055–4056.

Discussion

A proposal to amend part 39 of the Federal Aviation Regulations (14 CFR part 39) to add an airworthiness directive (AD), applicable to certain Boeing Model 737 series airplanes, was published as a notice of proposed rulemaking (NPRM) in the **Federal Register** on January 11, 1999 (64 FR 1549). That NPRM would have required inspections of certain bonded skin panel assemblies to detect delamination of the skin doublers (tear straps) from the skin panels; and follow-on corrective actions, if necessary. That NPRM was prompted by reports indicating that certain skin doublers were delaminated from their skin panels due to improper processing of certain skin panels. That condition, if not corrected, could result in fatigue cracks in the skin doublers and skin panels, and consequent rapid decompression of the airplane.

Explanation of New Relevant Service Information

Since the issuance of the NPRM, the FAA has reviewed and approved Boeing Service Bulletin 737–53–1179, Revision 1, dated September 30, 1999. (Boeing Service Bulletin 737–53–1179, dated June 22, 1995, was referenced as the appropriate source of service information in the NPRM.) Revision 1 of the service bulletin adds airplanes having line numbers (L/N) 2726 through 2869 inclusive to the effectivity listing. Among other things, Revision 1 of the service bulletin also introduces new inspection procedures and corrective actions, and recommends extension of certain compliance times and repetitive inspection intervals.

The service bulletin describes the area to be inspected as skin panel assemblies from 259 to 1016, on both sides of the airplane, except between stringers 10 and 14 between body stations 540 and 727. The procedures described in Revision 1 include repetitive external visual inspections to detect cracks or corrosion. Also, Revision 1 describes procedures for repetitive detailed visual inspections to detect cracks or corrosion at stringer 17, the window belts, and the lap and butt joints.

Revision 1 of the service bulletin classifies affected skin panels as either ''Zone A'' or ''Zone B,'' and describes procedures for a one-time internal inspection of ''Zone A'' skin panels, and a one-time internal or external ultrasonic inspection of ''Zone B'' skin panels, to detect cracks, corrosion, and delamination. The internal inspection includes a close visual inspection to detect delamination or corrosion and a visual inspection using a separation tool to detect weak or delaminated bonds. Accomplishment of the internal inspection eliminates the need for the repetitive external inspections.

The service bulletin describes procedures for corrective actions if cracking, corrosion, or delamination is found. Corrective actions include replacement of the affected skin panel with a new or serviceable skin panel manufactured by Boeing after a certain date. In lieu of replacement of the skin panel, the service bulletin also describes procedures for various follow-on inspections of the affected skin panel (including internal visual, low and high frequency eddy current, and ultrasonic inspections), and repair of cracks, corrosion, or delamination, as applicable.

Accomplishment of the actions specified in Revision 1 of the service bulletin is intended to adequately address the unsafe condition.

Comments

Due consideration has been given to the comments received in response to the NPRM. Certain comments have resulted in changes to the proposal that are reflected in this supplemental NPRM. The FAA finds that certain other comments received in response to the NPRM are no longer relevant to this proposal because of the introduction of Revision 1 of the service bulletin. Certain other comments that are still relevant but have not resulted in any change to the proposal will be addressed in the final rule, along with any additional comments received in response to this supplemental NPRM.

Request To Revise Compliance Time and Repetitive Interval for External Inspections

One commenter, the manufacturer, requests that the FAA revise paragraph (a)(2) of the NPRM to eliminate the statement of the grace period in calendar time (18 months after the effective date of this AD). The commenter states that disbonding is a function of flight cycles rather than calendar time, and therefore, a compliance time based on calendar time is not appropriate.

The FAA concurs with the commenter's request that the compliance threshold based on calendar time should be eliminated, though not for the reason stated by the commenter. The external visual inspections to which the commenter refers are intended to detect fatigue cracks, not disbonding, and growth of fatigue cracks is a function of flight cycles, not calendar time. Therefore, grace periods in calendar time have not been included for the actions specified in this supplemental NPRM.

Request To Clarify Affected Replacement Skin Panels

One commenter requests that the FAA revise the proposal to make the actions specified in the proposed AD applicable only to replacement skin panels fabricated by Boeing. The commenter states that many operators have fabricated their own replacement skin panels that are not affected by the proposed AD.

The FAA concurs with the commenter's request. Skin panels fabricated by operators are not affected by the proposed AD. Therefore, paragraph (b) of this supplemental NPRM specifies that the actions required by that paragraph apply only to affected airplanes ''on which any bonded skin panel was replaced with a new or serviceable, Boeing-built, bonded skin panel prior to October 1, 1997.'' In addition, the applicability statement of this supplemental NPRM has been revised accordingly.

Request To Correct Typographical Error

Two commenters request that the FAA revise paragraph (e) of the NPRM to correct a typographical error. Paragraph (e) of the NPRM states that corrective action for any detected crack was specified in paragraphs (b)(1) and (b)(2) of the proposed AD. The commenters state that the reference for corrective actions should have been to paragraphs (e)(1) and (e)(2) of the proposed AD. The FAA concurs with the intent of the commenter's request. Paragraphs (e), (e)(1), and (e)(2) of the NPRM are restated as paragraphs (c), (c)(1), and (c)(2) of the supplemental NPRM, and these paragraphs have been revised with correct references.

Explanation of Applicability

The applicability statement of the original NPRM includes Model 737–100, –200, –200C, –300, –400, and –500 series airplanes; having line numbers 1 through 3072 inclusive. The FAA set this applicability in consideration of the possibility that any airplane delivered prior to October 1, 1997, might have an improperly processed skin panel installed. The FAA considered line number 3072 to correspond to a delivery date of October 1, 1997. Since the issuance of the NPRM, the FAA has determined that line number 2947 corresponds to a delivery date of October 1, 1997. Therefore, the applicability statement of this supplemental NPRM includes certain Model 737 series airplanes having line numbers 1 through 2947 inclusive.

Explanation of New Requirements of Supplemental NPRM

Since an unsafe condition has been identified that is likely to exist or develop on other products of this same type design, this supplemental NPRM would require accomplishment of the actions specified in Boeing Service Bulletin 737–53–1179, Revision 1, described previously, except as discussed below.

Differences Between Supplemental NPRM and Service Bulletin

Operators should note that Table 3 of Figure 2 of the service bulletin specifies actions for ''airplanes up to [line number] 2869 with skins replaced with Boeing panels fabricated prior to April 1, 1997.'' However, paragraph (b) of this supplemental NPRM applies to ''airplanes having [line numbers] 1 through 2947 inclusive, on which any bonded skin panel was replaced with a new or serviceable, Boeing-built, bonded skin panel prior to October 1, 1997.'' An operator may not be able to accurately determine the date of manufacture of a replacement skin panel, but the operator would be able to determine the date of installation of a replacement panel. The FAA finds that making this proposed rule applicable to replacement panels installed prior to October 1, 1997, would meet the intent of the service bulletin by ensuring that this supplemental NPRM would apply to replacement skin panels manufactured by Boeing prior to April 1, 1997.

Operators also should note that, although the service bulletin specifies that the manufacturer may be contacted for disposition of certain repair conditions, this supplemental NPRM would require the repair of those conditions to be accomplished in accordance with a method approved by the FAA; or in accordance with data meeting the type certification basis of the airplane approved by a Boeing Company Designated Engineering Representative who has been authorized by the Manager, Seattle Aircraft Certification Office, to make such findings.

Additionally, the service bulletin specifies that certain actions may be accomplished in accordance with ''an equivalent'' procedure. However, this supplemental NPRM would require that those actions be accomplished in accordance with the procedures specified in Part 6, Subject 51–00–00, Figure 4, of the 737 Nondestructive Test Manual. An ''equivalent'' procedure may be used only if approved as an alternative method of compliance in accordance with the provisions of paragraph (f) of the proposed AD.

Conclusion

Since these changes expand the scope of the originally proposed rule, it is necessary to reopen the comment period to provide additional opportunity for public comment.

Cost Impact

There are approximately 2,083 airplanes of the affected design in the worldwide fleet. The FAA estimates that 863 airplanes of U.S. registry would be affected by this proposed AD.

It would take approximately 10 work hours per airplane to accomplish the proposed external general visual and detailed visual inspection, at an average labor rate of $60 per work hour. Based on these figures, the cost impact of this inspection proposed by this AD on U.S. operators is estimated to be $517,800, or $600 per airplane, per inspection cycle.

It would take approximately 360 work hours per airplane to accomplish the proposed internal visual and ultrasonic inspection, at an average labor rate of $60 per work hour. Based on these figures, the cost impact of this inspection proposed by this AD on U.S. operators is estimated to be $18,640,800, or $21,600 per airplane.

The cost impact figures discussed above are based on assumptions that no operator has yet accomplished any of the proposed requirements of this AD action, and that no operator would accomplish those actions in the future if this AD were not adopted. The cost impact figures discussed in AD rulemaking actions represent only the time necessary to perform the specific actions actually required by the AD. These figures typically do not include incidental costs, such as the time required to gain access and close up, planning time, or time necessitated by other administrative actions.

Regulatory Impact

The regulations proposed herein would not have a substantial direct effect on the States, on the relationship between the national Government and the States, or on the distribution of power and responsibilities among the various levels of government. Therefore, it is determined that this proposal would not have federalism implications under Executive Order 13132.

For the reasons discussed above, I certify that this proposed regulation (1) is not a ''significant regulatory action'' under Executive Order 12866; (2) is not a ''significant rule'' under the DOT Regulatory Policies and Procedures (44 FR 11034, February 26, 1979); and (3) if promulgated, will not have a significant economic impact, positive or negative, on a substantial number of small entities under the criteria of the Regulatory Flexibility Act. A copy of the draft regulatory evaluation prepared for this action is contained in the Rules Docket. A copy of it may be obtained by contacting the Rules Docket at the location provided under the caption **ADDRESSES**.

List of Subjects in 14 CFR Part 39

Air transportation, Aircraft, Aviation safety, Safety.

The Proposed Amendment

Accordingly, pursuant to the authority delegated to me by the Administrator, the Federal Aviation Administration proposes to amend part 39 of the Federal Aviation Regulations (14 CFR part 39) as follows:

PART 39—AIRWORTHINESS DIRECTIVES

1. The authority citation for part 39 continues to read as follows:

Authority: 49 U.S.C. 106(g), 40113, 44701.

§ 39.13 [Amended]

2. Section 39.13 is amended by adding the following new airworthiness directive:

Boeing: Docket 98–NM–11–AD.

Applicability: Model 737–100, –200, –200C, –300, –400, and –500 series airplanes; line numbers (L/N) 1 through 2947 inclusive; certified in any category.

Note 1: This AD applies to each airplane identified in the preceding applicability provision, regardless of whether it has been modified, altered, or repaired in the area subject to the requirements of this AD. For airplanes that have been modified, altered, or repaired so that the performance of the requirements of this AD is affected, the owner/operator must request approval for an alternative method of compliance in accordance with paragraph (f) of this AD. The request should include an assessment of the effect of the modification, alteration, or repair on the unsafe condition addressed by this AD; and, if the unsafe condition has not been eliminated, the request should include specific proposed actions to address it.

Compliance: Required as indicated, unless accomplished previously.

To prevent delamination of the skin doublers (tear straps) from the skin panels, which could result in fatigue cracks in the skin doublers and the skin panels, and consequent rapid decompression of the airplane, accomplish the following:

Initial and Repetitive Inspections (L/N 611 through 2725 inclusive)

(a) For airplanes having L/N 611 through 2725 inclusive: Accomplish the actions required by paragraphs (a)(1) and (a)(2) of this AD on any bonded skin panel assembly that has NOT been replaced with any new or serviceable bonded skin panel assembly, in accordance with Boeing Service Bulletin 737–53–1179, Revision 1, dated September 30, 1999.

Note 2: For the purposes of this AD, bonded skin panels consist of skin doublers (tear straps) that are bonded to skin panels located above stringer S–26 from body station (BS) 259 to BS 1016 on both sides of the airplane.

Note 3: If the skin panel is solid with no doublers (tear straps) bonded to it, the inspections required by this AD are not necessary for that skin panel.

(1) Prior to the accumulation of 20,000 total flight cycles, or within 5,000 flight cycles after the effective date of this AD, whichever occurs later, accomplish paragraphs (a)(1)(i) and (a)(1)(ii) of this AD, in accordance with the Accomplishment Instructions of the service bulletin. Repeat the inspections thereafter at intervals not to exceed 5,000 flight cycles, until accomplishment of paragraph (a)(2) of this AD.

(i) Perform an external general visual inspection of all affected areas NOT specified in paragraph (a)(1)(ii) to detect cracks or corrosion of bonded skin panels.

(ii) Perform a detailed visual inspection to detect cracks or corrosion of bonded skin panels at stringer 17, window belts, lap joints, and butt splice joints.

Note 4: For the purposes of this AD, a general visual inspection is defined as: ''A visual examination of an interior or exterior area, installation, or assembly to detect obvious damage, failure, or irregularity. This level of inspection is made under normally available lighting conditions such as daylight, hangar lighting, flashlight, or drop-light, and may require removal or opening of access panels or doors. Stands, ladders, or platforms may be required to gain proximity to the area being checked.''

Note 5: For the purposes of this AD, a detailed visual inspection is defined as: ''An intensive visual examination of a specific structural area, system, installation, or assembly to detect damage, failure, or irregularity. Available lighting is normally supplemented with a direct source of good lighting at intensity deemed appropriate by the inspector. Inspection aids such as mirror, magnifying lenses, etc., may be used. Surface cleaning and elaborate access procedures may be required.''

(2) Prior to the accumulation of 40,000 total flight cycles, but after the accumulation of 4,500 total flight cycles; or within 10,000 flight cycles after the effective date of this AD; whichever occurs later; accomplish paragraphs (a)(2)(i) and (a)(2)(ii) of this AD. Accomplishment of the requirements of paragraphs (a)(2)(i) and (a)(2)(ii) of this AD constitutes terminating action for the repetitive inspection requirement of paragraph (a)(1) of this AD.

(i) For ''Zone A'' areas (as defined in the ''Inspection'' section and Figure 2 of the service bulletin): Perform a one-time internal general visual inspection to detect cracks or corrosion of bonded skin panels, or delamination of the skin doublers from the bonded skin panels.

(ii) For ''Zone B'' areas (as defined in the ''Inspection'' section and Figure 2 of the service bulletin): Perform an internal or external ultrasonic inspection to detect cracks or corrosion of bonded skin panels, or delamination of the skin doublers from the bonded skin panels.

Note 6: Internal inspections accomplished prior to the effective date of this AD in accordance with the original issue of Boeing Service Bulletin 737–53–1179, dated June 22, 1995, are acceptable for compliance with paragraph (a)(2) of this AD, provided that they were accomplished after the accumulation of 4,500 total flight cycles.

Note 7: For the purposes of this AD, the one-time internal inspection includes an internal detailed visual inspection, a second internal detailed visual inspection while trying to separate the skin doublers from the skin panels, and an ultrasonic inspection.

Initial and Repetitive Inspections (L/N 1 through 2947 inclusive)

(b) For airplanes having L/N 1 through 2947 inclusive, on which any bonded skin panel was replaced with a new or serviceable, Boeing-built, bonded skin panel prior to October 1, 1997: Accomplish the actions required by paragraphs (b)(1) and (b)(2) of this AD, in accordance with Boeing Service Bulletin 737–53–1179, Revision 1, dated September 30, 1999.

(1) Within 20,000 flight cycles after replacement of the bonded skin panel, or within 5,000 flight cycles after the effective date of this AD, whichever occurs later, accomplish paragraphs (b)(1)(i) and (b)(1)(ii) of this AD, in accordance with the Accomplishment Instructions of the service bulletin. Repeat the inspections thereafter at intervals not to exceed 5,000 flight cycles, until accomplishment of paragraph (b)(2) of this AD.

(i) Perform an external general visual inspection of all affected areas NOT specified in paragraph (b)(1)(ii) to detect cracks or corrosion of bonded skin panels.

(ii) Perform a detailed visual inspection to detect cracks or corrosion of bonded skin panels at stringer 17, window belts, lap joints, and butt splice joints.

(2) Within 40,000 total flight cycles after skin panel replacement, but after the accumulation of 4,500 flight cycles after such replacement; or within 10,000 flight cycles after the effective date of this AD; whichever occurs later; accomplish paragraphs (b)(2)(i) and (b)(2)(ii) of this AD. Accomplishment of the requirements of paragraphs (b)(2)(i) and (b)(2)(ii) of this AD constitutes terminating action for the repetitive inspection requirement of paragraph (b)(1) of this AD.

(i) For ''Zone A'' areas (as defined in the ''Inspection'' section and Figure 2 of the service bulletin): Perform a one-time internal general visual inspection to detect cracks or corrosion of bonded skin panels or delamination of the skin doublers from the bonded skin panels.

(ii) For ''Zone B'' areas (as defined in the ''Inspection'' section and Figure 2 of the service bulletin): Perform an internal or external ultrasonic inspection to detect cracks or corrosion of bonded skin panels, or delamination of the skin doublers from the bonded skin panels.

Corrective Actions

(c) If any crack, corrosion, or delamination is detected during any inspection required by paragraph (a) or (b) of this AD, prior to further flight, accomplish the actions required by either paragraph (c)(1) or (c)(2) of this AD.

(1) Replace the cracked, corroded, or delaminated skin panel with a new or serviceable skin panel manufactured by Boeing on or after April 1, 1997, in accordance with Figure 2 of Boeing Service Bulletin 737–53–1179, Revision 1, dated September 30, 1999.

(2) Accomplish corrective actions (including additional inspections and repairs) in accordance with Figure 2 and the ''Delamination and Crack Repair'' section of Boeing Service Bulletin 737–53–1179, Revision 1, dated September 30, 1999, except as provided by paragraph (d) of this AD.

(d) Where Boeing Service Bulletin 737–53–1179, Revision 1, dated September 30, 1999, specifies that repair of a cracked or delaminated skin panel is to be accomplished in accordance with instructions received from Boeing, this AD requires that the repair be accomplished in accordance with a method approved by the Manager, Seattle

Aircraft Certification Office (ACO), FAA; or in accordance with data meeting the type certification basis of the airplane approved by a Boeing Company Designated Engineering Representative who has been authorized by the Manager, Seattle ACO, to make such findings. For a repair method to be approved by the Manager, Seattle ACO, as required by this paragraph, the approval letter must specifically reference this AD.

Operator's Equivalent Procedures

(e) Where Boeing Service Bulletin 737–53–1179, Revision 1, dated September 30, 1999, specifies that the actions required by this AD may be accomplished in accordance with an ''equivalent'' procedure, the actions must be accomplished in accordance with the chapter of the Boeing 737 Nondestructive Test Manual specified in the service bulletin.

Alternative Methods of Compliance

(f) An alternative method of compliance or adjustment of the compliance time that provides an acceptable level of safety may be used if approved by the Manager, Seattle ACO. Operators shall submit their requests through an appropriate FAA Principal Maintenance Inspector, who may add comments and then send it to the Manager, Seattle ACO.

Note 8: Information concerning the existence of approved alternative methods of compliance with this AD, if any, may be obtained from the Seattle ACO.

Special Flight Permits

(g) Special flight permits may be issued in accordance with sections 21.197 and 21.199 of the Federal Aviation Regulations (14 CFR 21.197 and 21.199) to operate the airplane to a location where the requirements of this AD can be accomplished.

Issued in Renton, Washington, on August 3, 2000.

Donald L. Riggin,

Acting Manager, Transport Airplane Directorate, Aircraft Certification Service.

[FR Doc. 00–20248 Filed 8–9–00; 8:45 am]

BILLING CODE 4910–13–U

DEPARTMENT OF TRANSPORTATION

Federal Aviation Administration

14 CFR Part 39

[Docket No. 99–NM–378–AD]

RIN 2120–AA64

Airworthiness Directives; Boeing Model 707 and 720 Series Airplanes

AGENCY: Federal Aviation Administration, DOT.

ACTION: Notice of proposed rulemaking (NPRM).

SUMMARY: This document proposes the adoption of a new airworthiness directive (AD) that is applicable to all Boeing Model 707 and 720 series airplanes. This proposal would require repetitive inspections of certain stringers and around certain fastener holes of the lower skin of the wings to detect fatigue cracking, and repair, if necessary. This action is necessary to detect and correct such cracking and consequent damage to adjacent structure, which could result in reduced structural integrity of the airplane. This action is intended to address the identified unsafe condition.

DATES: Comments must be received by September 25, 2000.

ADDRESSES: Submit comments in triplicate to the Federal Aviation Administration (FAA), Transport Airplane Directorate, ANM–114, Attention: Rules Docket No. 99–NM–378–AD, 1601 Lind Avenue, SW., Renton, Washington 98055–4056. Comments may be inspected at this location between 9:00 a.m. and 3:00 p.m., Monday through Friday, except Federal holidays. Comments may be submitted via fax to (425) 227–1232. Comments may also be sent via the Internet using the following address: 9-anm-nprmcomment@faa.gov. Comments sent via fax or the Internet must contain ''Docket No. 99–NM–378–AD'' in the subject line and need not be submitted in triplicate. Comments sent via the Internet as attached electronic files must be formatted in Microsoft Word 97 for Windows or ASCII text.

The service information referenced in the proposed rule may be obtained from Boeing Commercial Airplane Group, P.O. Box 3707, Seattle, Washington 98124–2207. This information may be examined at the FAA, Transport Airplane Directorate, 1601 Lind Avenue, SW., Renton, Washington.

FOR FURTHER INFORMATION CONTACT: James Rehrl, Aerospace Engineer, Airframe Branch, ANM–120S, FAA, Transport Airplane Directorate, Seattle Aircraft Certification Office, 1601 Lind Avenue, SW., Renton, Washington 98055–4056; telephone (425) 227–2783; fax (425) 227–1181.

SUPPLEMENTARY INFORMATION:

Comments Invited

Interested persons are invited to participate in the making of the proposed rule by submitting such written data, views, or arguments as they may desire. Communications shall identify the Rules Docket number and be submitted in triplicate to the address specified above. All communications received on or before the closing date for comments, specified above, will be considered before taking action on the proposed rule. The proposals contained in this notice may be changed in light of the comments received.

Submit comments using the following format:

- Organize comments issue-by-issue. For example, discuss a request to change the compliance time and a request to change the service bulletin reference as two separate issues.
- For each issue, state what specific change to the proposed AD is being requested.
- Include justification (*e.g.*, reasons or data) for each request.

Comments are specifically invited on the overall regulatory, economic, environmental, and energy aspects of the proposed rule. All comments submitted will be available, both before and after the closing date for comments, in the Rules Docket for examination by interested persons. A report summarizing each FAA-public contact concerned with the substance of this proposal will be filed in the Rules Docket.

Commenters wishing the FAA to acknowledge receipt of their comments submitted in response to this notice must submit a self-addressed, stamped postcard on which the following statement is made: ''Comments to Docket Number 99–NM–378–AD.'' The postcard will be date stamped and returned to the commenter.

Availability of NPRMs

Any person may obtain a copy of this NPRM by submitting a request to the FAA, Transport Airplane Directorate, ANM–114, Attention: Rules Docket No. 99–NM–378–AD, 1601 Lind Avenue, SW., Renton, Washington 98055–4056.

Discussion

In 1981, the FAA issued AD 81–11–06 R1, amendment 39–4178 (46 FR 38900), which is applicable to all Boeing Model 707 and 720 series airplanes. That AD was prompted by reports of cracking in the wing lower skin and stringers 5 and 7, and requires certain inspections of the lower skin of the wing and adjacent stringers to detect cracking. Such cracking could result in reduced structural integrity of the airplane. For Model 720 series airplanes, the AD requires low frequency eddy current (LFEC) inspections of the wing lower surface to detect cracks. For Model 707 series airplanes, the AD requires high frequency eddy current (HFEC) and optional LFEC inspections of the wing lower surface to detect cracks.

Actions Since Issuance of Previous Rule

Since the issuance of that AD, the FAA has received a report indicating

that the area where cracking was originally detected has expanded to numerous stringers, resulting in complete fracture of stringers 5 and 7 between wing station (WS) 470 and WS 733. In addition, there have been severed stringers at certain weep hole locations. In light of this fact, the manufacturer issued Boeing Alert Service Bulletin A3395, Revision 4, dated October 28, 1999. The FAA has reviewed and approved Revision 4 to the service bulletin, which expands the procedures specified in Revision 3, dated July 17, 1981, by adding an HFEC inspection to examine the area between WS 470 and WS 733 to detect cracking, and expands the current inspection area of stringers 5 and 7 to include the rib chord attachment. Accomplishment of the HFEC inspections specified in the service bulletin eliminates the need for the optional LFEC inspections, as stated above, for Model 707 series airplanes. In addition, the service bulletin describes procedures for inspecting the area around all fastener weep holes to detect cracking. The service bulletin also describes procedures for internal inspections if any cracking is detected. Accomplishment of the actions specified in the service bulletin is intended to adequately address the unsafe condition.

Explanation of Requirements of Proposed Rule

Since an unsafe condition has been identified that is likely to exist or develop on other products of this same type design, the proposed AD would require accomplishment of the actions specified in the service bulletin described previously, except as discussed below.

Difference Between Service Bulletin and Proposed AD

Operators should note that, although the service bulletin specifies that the manufacturer may be contacted for disposition of certain repair conditions, this proposed AD would require the repair of those conditions to be accomplished in accordance with a method approved by the FAA, or in accordance with data meeting the type certification basis of the airplane approved by a Boeing Company Designated Engineering Representative who has been authorized by the FAA to make such findings.

Cost Impact

There are approximately 49 Model 707 and 720 series airplanes of the affected design in the worldwide fleet. The FAA estimates that 2 airplanes of U.S. registry would be affected by this proposed AD, that it would take approximately 56 work hours per airplane to accomplish the proposed inspections, and that the average labor rate is $60 per work hour. Based on these figures, the cost impact of the proposed AD on U.S. operators is estimated to be $3,360, or $6,720 per airplane, per inspection cycle.

The cost impact figure discussed above is based on assumptions that no operator has yet accomplished any of the proposed requirements of this AD action, and that no operator would accomplish those actions in the future if this proposed AD were not adopted. The cost impact figures discussed in AD rulemaking actions represent only the time necessary to perform the specific actions actually required by the AD. These figures typically do not include incidental costs, such as the time required to gain access and close up, planning time, or time necessitated by other administrative actions.

Regulatory Impact

The regulations proposed herein would not have a substantial direct effect on the States, on the relationship between the national Government and the States, or on the distribution of power and responsibilities among the various levels of government. Therefore, it is determined that this proposal would not have federalism implications under Executive Order 13132.

For the reasons discussed above, I certify that this proposed regulation (1) is not a ''significant regulatory action'' under Executive Order 12866; (2) is not a ''significant rule'' under the DOT Regulatory Policies and Procedures (44 FR 11034, February 26, 1979); and (3) if promulgated, will not have a significant economic impact, positive or negative, on a substantial number of small entities under the criteria of the Regulatory Flexibility Act. A copy of the draft regulatory evaluation prepared for this action is contained in the Rules Docket. A copy of it may be obtained by contacting the Rules Docket at the location provided under the caption **ADDRESSES.**

List of Subjects in 14 CFR Part 39

Air transportation, Aircraft, Aviation safety, Safety.

The Proposed Amendment

Accordingly, pursuant to the authority delegated to me by the Administrator, the Federal Aviation Administration proposes to amend part 39 of the Federal Aviation Regulations (14 CFR part 39) as follows:

PART 39—AIRWORTHINESS DIRECTIVES

1. The authority citation for part 39 continues to read as follows:

Authority: 49 U.S.C. 106(g), 40113, 44701.

§ 39.13 [Amended]

2. Section 39.13 is amended by adding the following new airworthiness directive:

Boeing: Docket 99–NM–378–AD.

Applicability: All Model 707 and 720 series airplanes, certificated in any category.

Note 1: This AD applies to each airplane identified in the preceding applicability provision, regardless of whether it has been modified, altered, or repaired in the area subject to the requirements of this AD. For airplanes that have been modified, altered, or repaired so that the performance of the requirements of this AD is affected, the owner/operator must request approval for an alternative method of compliance in accordance with paragraph (e) of this AD. The request should include an assessment of the effect of the modification, alteration, or repair on the unsafe condition addressed by this AD; and, if the unsafe condition has not been eliminated, the request should include specific proposed actions to address it.

Compliance: Required as indicated, unless accomplished previously.

To detect fatigue cracking of certain stringers, and around certain fastener holes of the lower skin of the wings, which could result in damage to adjacent structure and consequent reduced structural integrity of the airplane, accomplish the following:

Initial and Repetitive Inspections

(a) For Model 720 series airplanes: Within 500 flight cycles after the effective date of this AD, perform an initial high frequency eddy current (HFEC) inspection to detect cracking, in accordance with Figure 1 of Boeing Alert Service Bulletin A3395, Revision 4, dated October 28, 1999.

(b) For Model 707 series airplanes having fewer than 15,000 total flight cycles as of the effective date of this AD: Prior to the accumulation of 15,000 total flight cycles, or within 150 flight cycles after the effective date of this AD, whichever occurs later, perform an initial HFEC inspection in accordance with Figure 2; steps 1, 2, and 3; of Boeing Alert Service Bulletin A3395, Revision 4, dated October 28, 1999. Repeat the inspection thereafter at intervals not to exceed 1,300 flight cycles. Accomplishment of the repetitive HFEC inspections terminates the low frequency eddy current inspections specified in AD 81–11–06 R1, amendment 39–4178.

(c) For Model 707 series airplanes having 15,000 total flight cycles or more as of the effective date of this AD: Within 150 flight cycles after the effective date of this AD, perform an initial HFEC inspection in accordance with Figure 2; steps 4, 5, and 6; of Boeing Alert Service Bulletin A3395, Revision 4, dated October 28, 1999, and accomplish the requirements in paragraphs (c)(1) and (c)(2) of this AD.

(1) Repeat the inspection thereafter at intervals not to exceed 150 flight cycles until accomplishment of the inspections required by paragraph (c)(2) of this AD.

(2) Within 400 flight cycles after accomplishment of the initial inspection required by paragraph (c) of this AD, accomplish the HFEC inspections required by paragraph (b) of this AD. Accomplishment of these inspections terminates the repetitive inspections required by paragraph (c)(1) of this AD.

Note 2: The actions required by AD 81–11–06 R1, amendment 39–4178 [with the exception of the LFEC inspections, as specified in paragraph (b) of this AD] remain in effect.

Inspect and Repair

(d) If any cracking is detected during any inspection required by this AD, prior to further flight, perform an internal inspection in accordance with the Work Instructions specified in Boeing Alert Service Bulletin A3395, Revision 4, dated October 28, 1999; and, prior to further flight, repair in accordance with a method approved by the Manager, Seattle Aircraft Certification Office (ACO), FAA, Transport Airplane Directorate; or in accordance with data meeting the type certification basis of the airplane approved by a Boeing Company Designated Engineering Representative who has been authorized by the Manager, Seattle ACO, to make such findings. For a repair method to be approved by the Manager, Seattle ACO, as required by this paragraph, the Manager's approval letter must specifically reference this AD.

Alternative Methods of Compliance

(e) An alternative method of compliance or adjustment of the compliance time that provides an acceptable level of safety may be used if approved by the Manager, Seattle ACO. Operators shall submit their requests through an appropriate FAA Principal Maintenance Inspector, who may add comments and then send it to the Manager, Seattle ACO.

Note 3: Information concerning the existence of approved alternative methods of compliance with this AD, if any, may be obtained from the Seattle ACO.

Special Flight Permit

(f) Special flight permits may be issued in accordance with sections 21.197 and 21.199 of the Federal Aviation Regulations (14 CFR 21.197 and 21.199) to operate the airplane to a location where the requirements of this AD can be accomplished.

Issued in Renton, Washington, on August 3, 2000.

Donald L. Riggin,

Acting Manager, Transport Airplane Directorate, Aircraft Certification Service.

[FR Doc. 00–20247 Filed 8–9–00; 8:45 am]

BILLING CODE 4910–13–U

DEPARTMENT OF TRANSPORTATION

Federal Aviation Administration

14 CFR Part 39

[Docket No. 2000–NM–18–AD]

RIN 2120–AA64

Airworthiness Directives; Boeing Model 727 Series Airplanes

AGENCY: Federal Aviation Administration, DOT.

ACTION: Notice of proposed rulemaking (NPRM).

SUMMARY: This document proposes the adoption of a new airworthiness directive (AD) that is applicable to all Boeing Model 727 series airplanes. This proposal would require repetitive inspections of the bearing support fitting of the forward trunnion on the main landing gear (MLG) to detect corrosion and cracking; follow-on actions, if necessary; and rework of the support fitting. This action is necessary to prevent failure of the support fitting, which could result in collapse of the MLG during normal operations; consequent damage to the airplane structure; and injury to flight crew, passengers, or ground personnel. This action is intended to address the identified unsafe condition.

DATES: Comments must be received by September 25, 2000.

ADDRESSES: Submit comments in triplicate to the Federal Aviation Administration (FAA), Transport Airplane Directorate, ANM–114, Attention: Rules Docket No. 2000–NM–18–AD, 1601 Lind Avenue, SW., Renton, Washington 98055–4056. Comments may be inspected at this location between 9:00 a.m. and 3:00 p.m., Monday through Friday, except Federal holidays. Comments may be submitted via fax to (425) 227–1232. Comments may also be sent via the Internet using the following address: 9-anm-nprmcomment@faa.gov. Comments sent via fax or the Internet must contain ''Docket No. 2000–NM–18–AD'' in the subject line and need not be submitted in triplicate. Comments sent via the Internet as attached electronic files must be formatted in Microsoft Word 97 for Windows or ASCII text.

The service information referenced in the proposed rule may be obtained from Boeing Commercial Airplane Group, P.O. Box 3707, Seattle, Washington 98124–2207. This information may be examined at the FAA, Transport Airplane Directorate, 1601 Lind Avenue, SW., Renton, Washington.

FOR FURTHER INFORMATION CONTACT: Walter Sippel, Aerospace Engineer, Airframe Branch, ANM–120S, FAA, Transport Airplane Directorate, Seattle Aircraft Certification Office (ACO), 1601 Lind Avenue, SW., Renton, Washington; telephone (425) 227–2028 or (425) 227–2774; fax (425) 227–1181.

SUPPLEMENTARY INFORMATION:

Comments Invited

Interested persons are invited to participate in the making of the proposed rule by submitting such written data, views, or arguments as they may desire. Communications shall identify the Rules Docket number and be submitted in triplicate to the address specified above. All communications received on or before the closing date for comments, specified above, will be considered before taking action on the proposed rule. The proposals contained in this notice may be changed in light of the comments received.

Submit comments using the following format:

- Organize comments issue-by-issue. For example, discuss a request to change the compliance time and a request to change the service bulletin reference as two separate issues.
- For each issue, state what specific change to the proposed AD is being requested.
- Include justification (*e.g.*, reasons or data) for each request.

Comments are specifically invited on the overall regulatory, economic, environmental, and energy aspects of the proposed rule. All comments submitted will be available, both before and after the closing date for comments, in the Rules Docket for examination by interested persons. A report summarizing each FAA-public contact concerned with the substance of this proposal will be filed in the Rules Docket.

Commenters wishing the FAA to acknowledge receipt of their comments submitted in response to this notice must submit a self-addressed, stamped postcard on which the following statement is made: ''Comments to Docket Number 2000–NM–18–AD.'' The postcard will be date stamped and returned to the commenter.

Availability of NPRMs

Any person may obtain a copy of this NPRM by submitting a request to the FAA, Transport Airplane Directorate, ANM–114, Attention: Rules Docket No. 2000–NM–18–AD, 1601 Lind Avenue, SW., Renton, Washington 98055–4056.

Discussion

The FAA has received reports indicating collapse of the main landing gear (MLG) during normal operations of certain Boeing Model 727 series airplanes. The affected airplanes had accumulated between 17,000 and 53,000 total flight cycles. Analysis of the MLG revealed that the collapse was caused by fatigue cracking and subsequent breakage of the bearing support fitting of the forward trunnion. The alloy steel trunnion fitting currently installed on these airplanes is susceptible to corrosion and cracking. Such conditions, if not corrected, could result in failure of the support fitting; collapse of the MLG; consequent damage to the airplane structure; and injury to flight crew, passengers, or ground personnel.

Explanation of Relevant Service Information

The FAA has reviewed and approved Boeing Alert Service Bulletin 727–57A0179, Revision 4, dated July 13, 2000, which describes procedures for ultrasonic, visual, and magnetic particle inspections to detect corrosion and cracking of the bearing support fitting of the forward trunnion on the MLG, and rework of the fitting if cracking is detected. The alert service bulletin also describes procedures for eventual rework of the fitting if no cracking is detected. Additionally, the alert service bulletin references Boeing Standard Practices Overhaul Manual, Chapter 20–30–03, as the appropriate source for accomplishment of the cleaning and application of corrosion inhibiting compound to the fitting if no cracking is detected. Accomplishment of the actions specified in the alert service bulletin is intended to adequately address the identified unsafe condition.

Explanation of Requirements of Proposed Rule

Since an unsafe condition has been identified that is likely to exist or develop on other products of this same type design, the proposed AD would require accomplishment of the actions specified in the alert service bulletin described previously.

Cost Impact

There are approximately 1,375 airplanes of the affected design in the worldwide fleet. The FAA estimates that 912 airplanes of U.S. registry would be affected by this proposed AD.

Should an operator be required to accomplish the proposed ultrasonic inspection, it would take approximately 4 work hours per airplane to accomplish the inspection, at an average labor rate of $60 per work hour. Based on these figures, the cost impact of the proposed ultrasonic inspection on U.S. operators is estimated to be $240 per airplane, per inspection cycle.

It would take approximately 6 work hours per airplane to accomplish the proposed detailed visual and magnetic particle inspections, at the average labor rate of $60 per work hour. Based on these figures, the cost impact of the proposed ultrasonic inspection on U.S. operators is estimated to be $328,320, or $360 per airplane, per inspection cycle.

It would take approximately 108 work hours per airplane to accomplish the proposed rework of the trunnion fitting, at an average labor rate of $60 per work hour. Based on these figures, the cost impact of the proposed rework on U.S. operators is estimated to be $5,909,760, or $6,480 per airplane.

The cost impact figures discussed above are based on assumptions that no operator has yet accomplished any of the proposed requirements of this AD action, and that no operator would accomplish those actions in the future if this proposed AD were not adopted. The cost impact figures discussed in AD rulemaking actions represent only the time necessary to perform the specific actions actually required by the AD. These figures typically do not include incidental costs, such as the time required to gain access and close up, planning time, or time necessitated by other administrative actions.

Regulatory Impact

The regulations proposed herein would not have a substantial direct effect on the States, on the relationship between the national Government and the States, or on the distribution of power and responsibilities among the various levels of government. Therefore, it is determined that this proposal would not have federalism implications under Executive Order 13132.

For the reasons discussed above, I certify that this proposed regulation (1) Is not a ''significant regulatory action'' under Executive Order 12866; (2) is not a ''significant rule'' under the DOT Regulatory Policies and Procedures (44 FR 11034, February 26, 1979); and (3) if promulgated, will not have a significant economic impact, positive or negative, on a substantial number of small entities under the criteria of the Regulatory Flexibility Act. A copy of the draft regulatory evaluation prepared for this action is contained in the Rules Docket. A copy of it may be obtained by contacting the Rules Docket at the location provided under the caption **ADDRESSES**.

List of Subjects in 14 CFR Part 39

Air transportation, Aircraft, Aviation safety, Safety.

The Proposed Amendment

Accordingly, pursuant to the authority delegated to me by the Administrator, the Federal Aviation Administration proposes to amend part 39 of the Federal Aviation Regulations (14 CFR part 39) as follows:

PART 39—AIRWORTHINESS DIRECTIVES

1. The authority citation for part 39 continues to read as follows:

Authority: 49 U.S.C. 106(g), 40113, 44701.

§ 39.13 [Amended]

2. Section 39.13 is amended by adding the following new airworthiness directive:

Boeing: Docket 2000–NM–18–AD.

Applicability: All Model 727 series airplanes, certificated in any category.

Note 1: This AD applies to each airplane identified in the preceding applicability provision, regardless of whether it has been modified, altered, or repaired in the area subject to the requirements of this AD. For airplanes that have been modified, altered, or repaired so that the performance of the requirements of this AD is affected, the owner/operator must request approval for an alternative method of compliance in accordance with paragraph (e) of this AD. The request should include an assessment of the effect of the modification, alteration, or repair on the unsafe condition addressed by this AD; and, if the unsafe condition has not been eliminated, the request should include specific proposed actions to address it.

Compliance: Required as indicated, unless accomplished previously.

To prevent failure of the bearing support fitting of the forward trunnion, which could result in collapse of the main landing gear during normal operations; consequent damage to the airplane structure; and injury to flight crew, passengers, or ground personnel; accomplish the following:

Interim Inspections/Follow-On Actions

(a) For airplanes having a bearing support fitting of the forward trunnion installed that has NOT been reworked: Within 1,500 flight cycles or 6 months after the effective date of this AD, whichever occurs first; perform an ultrasonic inspection of the bearing support fitting of the forward trunnion to detect corrosion and cracking in accordance with Part I of the Accomplishment Instructions of Boeing Alert Service Bulletin 727–57A0179, Revision 3, dated September 2, 1999; or Revision 4, dated July 13, 2000, and within 18 months after the effective date of this AD, accomplish the requirements in paragraph (d) of this AD.

(b) For airplanes having a bearing support fitting of the forward trunnion installed that has been reworked in accordance with the Accomplishment Instructions of Boeing Alert

Service Bulletin 727–57A0179, dated March 8, 1990; Revision 1, dated June 13, 1991; Revision 2, dated April 30, 1992; Revision 3, dated September 2, 1999; or Revision 4, dated July 13, 2000: Perform an ultrasonic inspection of the bearing support fitting of the forward trunnion to detect corrosion and cracking in accordance with Part I of the Accomplishment Instructions of Boeing Alert Service Bulletin 727–57A0179, Revision 3, dated September 2, 1999; or Revision 4, dated July 13, 2000; at the later of the times specified in paragraphs (b)(1) and (b)(2) of this AD.

(1) Within 12,000 flight cycles or 10 years after rework, whichever occurs first.

(2) Within 1,500 flight cycles or 6 months after the effective date of this AD, whichever occurs first.

Follow-On Actions/Repetitive Inspections

(i) If no corrosion or cracking is detected, clean the fitting in accordance with the alert service bulletin. Repeat the inspection thereafter at intervals not to exceed 1,500 flight cycles or 6 months, whichever occurs first.

(ii) If any corrosion or cracking is detected, prior to further flight, accomplish the requirements in paragraph (d) of this AD.

Inspections/Rework

(c) For airplanes having a bearing support fitting of the forward trunnion installed that has been reworked in accordance with the Accomplishment Instructions of Boeing Alert Service Bulletin 727–57A0179, dated March 8, 1990; Revision 1, dated June 13, 1991; Revision 2, dated April 30, 1992; Revision 3, dated September 2, 1999; or Revision 4, dated July 13, 2000: Accomplish the requirements in paragraph (d) of this AD at the later of the times specified in paragraphs (c)(1) and (c)(2) of this AD.

(1) Within 12,000 flight cycles or 10 years after rework, whichever occurs first.

(2) Within 36 months after the effective date of this AD.

(d) At the applicable time specified in paragraph (a), (b)(2)(ii), or (c) of this AD, as applicable: Perform detailed visual and magnetic particle inspections to detect corrosion and cracking of the fitting in accordance with Part II of the Accomplishment Instructions of Boeing Alert Service Bulletin 727–57A0179, Revision 3, dated September 2, 1999, or Revision 4, dated July 13, 2000. Rework the fitting in accordance with the alert service bulletin and repeat the inspections at intervals not to exceed 12,000 flight cycles or 10 years, whichever occurs first. Accomplishment of the requirements in this paragraph constitutes terminating action for the requirements in paragraph (b) of this AD.

Note 2: For the purposes of this AD, a detailed visual inspection is defined as: ''An intensive visual examination of a specific structural area, system, installation, or assembly to detect damage, failure, or irregularity. Available lighting is normally supplemented with a direct source of good lighting at intensity deemed appropriate by the inspector. Inspection aids such as mirror, magnifying lenses, etc., may be used. Surface cleaning and elaborate access procedures may be required.''

Spares

(e) As of the effective date of this AD, no person shall install on any airplane any bearing support fitting of the forward trunnion identified in the ''Existing Part Number'' column of Paragraph 2.E. of Boeing Alert Service Bulletin 727–57A0179, Revision 4, dated July 13, 2000, unless that part has been reworked in accordance with Part II of the Accomplishment Instructions of the alert service bulletin. Verify the part number on the fitting prior to installation, and install the subject fitting only if the maximum taxi gross weight (MTGW) limit of the fitting is greater than or equal to the MTGW of the airplane, in accordance with Boeing Drawing 65C37625, as illustrated in the alert service bulletin.

Alternative Methods of Compliance

(f) An alternative method of compliance or adjustment of the compliance time that provides an acceptable level of safety may be used if approved by the Manager, Seattle Aircraft Certification Office (ACO), FAA, Transport Airplane Directorate. Operators shall submit their requests through an appropriate FAA Principal Maintenance Inspector, who may add comments and then send it to the Manager, Seattle ACO.

Note 3: Information concerning the existence of approved alternative methods of compliance with this AD, if any, may be obtained from the Seattle ACO.

Special Flight Permit

(g) Special flight permits may be issued in accordance with sections 21.197 and 21.199 of the Federal Aviation Regulations (14 CFR 21.197 and 21.199) to operate the airplane to a location where the requirements of this AD can be accomplished.

Issued in Renton, Washington, on August 3, 2000.

Donald L. Riggin,

Acting Manager, Transport Airplane Directorate, Aircraft Certification Service.

[FR Doc. 00–20246 Filed 8–9–00; 8:45 am]

BILLING CODE 4910–13–P

DEPARTMENT OF TRANSPORTATION

Federal Aviation Administration

14 CFR Part 39

[Docket No. 2000–NM–60–AD]

RIN 2120–AA64

Airworthiness Directives; Raytheon (Beech) Model MU–300, MU–300–10, 400, 400A, and 400T Series Airplanes

AGENCY: Federal Aviation Administration, DOT.

ACTION: Notice of proposed rulemaking (NPRM).

SUMMARY: This document proposes the adoption of a new airworthiness directive (AD) that is applicable to certain Raytheon (Beech) Model MU–300, MU–300–10, 400, 400A, and 400T series airplanes. This proposal would require a one-time inspection to detect hydraulic fluid leakage from the B-nut area, which attaches a hydraulic tube to the anti-skid valve assembly, and corrective actions, if necessary; and installation of an additional support for the hydraulic tube. This action is necessary to prevent an asymmetric braking condition and a longer stopping distance due to sudden loss of normal braking to the left wheel. Such loss of normal braking could result in the airplane overrunning the runway surface. This action is intended to address the identified unsafe condition.

DATES: Comments must be received by September 25, 2000.

ADDRESSES: Submit comments in triplicate to the Federal Aviation Administration (FAA), Transport Airplane Directorate, ANM–114, Attention: Rules Docket No. 2000–NM–60–AD, 1601 Lind Avenue, SW., Renton, Washington 98055–4056. Comments may be inspected at this location between 9:00 a.m. and 3:00 p.m., Monday through Friday, except Federal holidays. Comments may be submitted via fax to (425) 227–1232. Comments may also be sent via the Internet using the following address: 9-anm-nprmcomment@faa.gov. Comments sent via fax or the Internet must contain ''Docket No. 2000–NM–60–AD'' in the subject line and need not be submitted in triplicate. Comments sent via the Internet as attached electronic files must be formatted in Microsoft Word 97 for Windows or ASCII text.

The service information referenced in the proposed rule may be obtained from Raytheon Aircraft Company, Manager Service Engineering, Beechjet/Premier Technical Support Department, P.O. Box 85, Wichita, Kansas 67201–0085. This information may be examined at the FAA, Transport Airplane Directorate, 1601 Lind Avenue, SW., Renton, Washington; or at the FAA, Wichita Aircraft Certification Office, 1801 Airport Road, Room 100, Mid-Continent Airport, Wichita, Kansas.

FOR FURTHER INFORMATION CONTACT: Paul C. DeVore, Aerospace Engineer, Systems and Propulsion Branch, ACE–116W, FAA, Wichita Aircraft Certification Office, 1801 Airport Road, Room 100, Mid-Continent Airport, Wichita, Kansas, 67209, telephone, (316) 946–4142; fax, (316) 946–4407.

SUPPLEMENTARY INFORMATION:

Comments Invited

Interested persons are invited to participate in the making of the

proposed rule by submitting such written data, views, or arguments as they may desire. Communications shall identify the Rules Docket number and be submitted in triplicate to the address specified above. All communications received on or before the closing date for comments, specified above, will be considered before taking action on the proposed rule. The proposals contained in this notice may be changed in light of the comments received.

Submit comments using the following format:

- Organize comments issue-by-issue. For example, discuss a request to change the compliance time and a request to change the service bulletin reference as two separate issues.
- For each issue, state what specific change to the proposed AD is being requested.
- Include justification (e.g., reasons or data) for each request.

Comments are specifically invited on the overall regulatory, economic, environmental, and energy aspects of the proposed rule. All comments submitted will be available, both before and after the closing date for comments, in the Rules Docket for examination by interested persons. A report summarizing each FAA-public contact concerned with the substance of this proposal will be filed in the Rules Docket.

Commenters wishing the FAA to acknowledge receipt of their comments submitted in response to this notice must submit a self-addressed, stamped postcard on which the following statement is made: ''Comments to Docket Number 2000–NM–60–AD.'' The postcard will be date stamped and returned to the commenter.

Availability of NPRMs

Any person may obtain a copy of this NPRM by submitting a request to the FAA, Transport Airplane Directorate, ANM–114, Attention: Rules Docket No. 2000–NM–60–AD, 1601 Lind Avenue, SW., Renton, Washington 98055–4056.

Discussion

The FAA has received a report indicating that hydraulic fluid leakage has occurred on certain Raytheon (Beech) Model MU–300, MU–300–10, 400, 400A, and 400T series airplanes. The existing design of the hydraulic tube installation for the left wheel of the landing gear includes an unsupported hydraulic line (tube), which is vulnerable to vibrations or mishandling. This unsupported hydraulic tube was found to have fatigue cracks around the flared end of the tube causing hydraulic fluid to leak from the fittings (B-nut area). Such leakage could progress to a sudden loss of normal braking to the left wheel resulting in an asymmetric braking condition and a longer stopping distance. This condition, if not corrected, could result in the airplane overrunning the runway surface.

Explanation of Relevant Service Information

The FAA has reviewed and approved Raytheon Aircraft Service Bulletin SB 32–3300, dated December 1999, which describes procedures for a one-time inspection to detect hydraulic fluid leakage from the B-nut area, which attaches a hydraulic tube to the anti-skid valve assembly, and corrective actions, if necessary. The corrective actions involve the installation of a new or serviceable hydraulic tube if hydraulic fluid leakage is found. The service bulletin also describes procedures for the installation of an additional support for the hydraulic tube, which involves the installation of a new nutplate, clamp, and screw. Accomplishment of the actions specified in the service bulletin is intended to adequately address the identified unsafe condition.

Explanation of Requirements of Proposed Rule

Since an unsafe condition has been identified that is likely to exist or develop on other products of this same type design, the proposed AD would require accomplishment of the actions specified in the service bulletin described previously.

Cost Impact

There are approximately 567 series airplanes of the affected design in the worldwide fleet. The FAA estimates that 522 airplanes of U.S. registry would be affected by this proposed AD, that it would take approximately 2 work hours per airplane to accomplish the proposed actions, and that the average labor rate is $60 per work hour. Required parts would cost approximately $31 per airplane. Based on these figures, the cost impact of the proposed AD on U.S. operators is estimated to be $78,822, or $151 per airplane.

The cost impact figure discussed above is based on assumptions that no operator has yet accomplished any of the proposed requirements of this AD action, and that no operator would accomplish those actions in the future if this proposed AD were not adopted. The cost impact figures discussed in AD rulemaking actions represent only the time necessary to perform the specific actions actually required by the AD. These figures typically do not include incidental costs, such as the time required to gain access and close up, planning time, or time necessitated by other administrative actions. Additionally, the manufacturer has indicated the warranty remedies may be available to defer the cost of the replacement parts also associated with accomplishing this actions required by this proposed AD.

Regulatory Impact

The regulations proposed herein would not have a substantial direct effect on the States, on the relationship between the national Government and the States, or on the distribution of power and responsibilities among the various levels of government. Therefore, it is determined that this proposal would not have federalism implications under Executive Order 13132.

For the reasons discussed above, I certify that this proposed regulation (1) is not a ''significant regulatory action'' under Executive Order 12866; (2) is not a ''significant rule'' under the DOT Regulatory Policies and Procedures (44 FR 11034, February 26, 1979); and (3) if promulgated, will not have a significant economic impact, positive or negative, on a substantial number of small entities under the criteria of the Regulatory Flexibility Act. A copy of the draft regulatory evaluation prepared for this action is contained in the Rules Docket. A copy of it may be obtained by contacting the Rules Docket at the location provided under the caption **ADDRESSES**.

List of Subjects in 14 CFR Part 39

Air transportation, Aircraft, Aviation safety, Safety.

The Proposed Amendment

Accordingly, pursuant to the authority delegated to me by the Administrator, the Federal Aviation Administration proposes to amend part 39 of the Federal Aviation Regulations (14 CFR part 39) as follows:

PART 39—AIRWORTHINESS DIRECTIVES

1. The authority citation for part 39 continues to read as follows:

Authority: 49 U.S.C. 106(g), 40113, 44701.

§ 39.13 [Amended]

2. Section 39.13 is amended by adding the following new airworthiness directive:

Raytheon Aircraft Company (Formerly Beech): Docket 2000–NM–60–AD.

Applicability: Model MU–300, MU–300–10, 400, 400A, and 400T series airplanes; as listed in Raytheon Aircraft Service Bulletin

SB 32–3300, dated December 1999; certificated in any category.

Note 1: This AD applies to each airplane identified in the preceding applicability provision, regardless of whether it has been modified, altered, or repaired in the area subject to the requirements of this AD. For airplanes that have been modified, altered, or repaired so that the performance of the requirements of this AD is affected, the owner/operator must request approval for an alternative method of compliance in accordance with paragraph (b) of this AD. The request should include an assessment of the effect of the modification, alteration, or repair on the unsafe condition addressed by this AD; and, if the unsafe condition has not been eliminated, the request should include specific proposed actions to address it.

Compliance: Required as indicated, unless accomplished previously.

To prevent an asymmetric braking condition and a longer stopping distance due to sudden loss of normal braking to the left wheel, which could result in the airplane overrunning the runway surface, accomplish the following:

General Visual Inspection

(a) Within 200 flight hours after the effective date of this AD, perform a one-time general visual inspection to detect hydraulic fluid leakage from the B-nut area, which attaches a hydraulic tube to the anti-skid valve assembly, in accordance with Raytheon Aircraft Service Bulletin SB 32–3300, dated December 1999.

Note 2: For the purposes of this AD, a general visual inspection is defined as: ''A visual examination of an interior or exterior area, installation, or assembly to detect obvious damage, failure, or irregularity. This level of inspection is made under normally available lighting conditions such as daylight, hangar lighting, flashlight, or drop-light, and may require removal or opening of access panels or doors. Stands, ladders, or platforms may be required to gain proximity to the area being checked.''

(1) If no leakage is found, prior to further flight, install an additional support (i.e., new nutplate, clamp, and screw) for the hydraulic tube; in accordance with the service bulletin.

(2) If any leakage is found, prior to further flight, replace the hydraulic tube with a new or serviceable hydraulic tube, and install an additional support (i.e., new nutplate, clamp, and screw) for the hydraulic tube; in accordance with the service bulletin.

Alternative Methods of Compliance

(b) An alternative method of compliance or adjustment of the compliance time that provides an acceptable level of safety may be used if approved by the Manager, Wichita Aircraft Certification Office (ACO), FAA, Small Airplane Directorate. Operators shall submit their requests through an appropriate FAA Principal Maintenance Inspector, who may add comments and then send it to the Manager, Wichita ACO.

Note 3: Information concerning the existence of approved alternative methods of compliance with this AD, if any, may be obtained from the Wichita ACO.

Special Flight Permit

(c) Special flight permits may be issued in accordance with sections 21.197 and 21.199 of the Federal Aviation Regulations (14 CFR 21.197 and 21.199) to operate the airplane to a location where the requirements of this AD can be accomplished.

Issued in Renton, Washington, on August 3, 2000.

Donald L. Riggin,

Acting Manager, Transport Airplane Directorate, Aircraft Certification Service.

[FR Doc. 00–20245 Filed 8–9–00; 8:45 am]

BILLING CODE 4910–13–P

DEPARTMENT OF TRANSPORTATION

Federal Aviation Administration

14 CFR Part 39

[Docket No. 2000–NM–226–AD]

RIN 2120–AA64

Airworthiness Directives; Boeing Model 737, 747, 757, and 767 Series Airplanes

AGENCY: Federal Aviation Administration, DOT.

ACTION: Notice of proposed rulemaking (NPRM).

SUMMARY: This document proposes the adoption of a new airworthiness directive (AD) that is applicable to certain Boeing Model 737, 747, 757, and 767 series airplanes. This proposal would require rework of certain duct assemblies of the environmental control system (ECS) or replacement of the duct assemblies with new or reworked duct assemblies. This action is necessary to prevent potential ignition of fiberglass insulation material installed on the outside of the ECS ducts, which could propagate a small fire and lead to a larger fire. This action is intended to address the identified unsafe condition.

DATES: Comments must be received by September 25, 2000.

ADDRESSES: Submit comments in triplicate to the Federal Aviation Administration (FAA), Transport Airplane Directorate, ANM–114, Attention: Rules Docket No. 2000–NM–226–AD, 1601 Lind Avenue, SW., Renton, Washington 98055–4056. Comments may be inspected at this location between 9:00 a.m. and 3:00 p.m., Monday through Friday, except Federal holidays. Comments may be submitted via fax to (425) 227–1232. Comments may also be sent via the Internet using the following address: 9-anm-nprmcomment@faa.gov. Comments sent via fax or the Internet must contain ''Docket No. 2000–NM–226–AD'' in the subject line and need not be submitted in triplicate. Comments sent via the Internet as attached electronic files must be formatted in Microsoft Word 97 for Windows or ASCII text.

The service information referenced in the proposed rule may be obtained from Boeing Commercial Airplane Group, P.O. Box 3707, Seattle, Washington 98124–2207. This information may be examined at the FAA, Transport Airplane Directorate, 1601 Lind Avenue, SW., Renton, Washington.

FOR FURTHER INFORMATION CONTACT: James Cashdollar, Aerospace Engineer, Airframe Branch, ANM–120S, FAA, Seattle Aircraft Certification Office, 1601 Lind Avenue, SW., Renton, Washington 98055–4056; telephone (425) 227–2785; fax (425) 227–1181.

SUPPLEMENTARY INFORMATION:

Comments Invited

Interested persons are invited to participate in the making of the proposed rule by submitting such written data, views, or arguments as they may desire. Communications shall identify the Rules Docket number and be submitted in triplicate to the address specified above. All communications received on or before the closing date for comments, specified above, will be considered before taking action on the proposed rule. The proposals contained in this notice may be changed in light of the comments received.

Submit comments using the following format:

- Organize comments issue-by-issue. For example, discuss a request to change the compliance time and a request to change the service bulletin reference as two separate issues.
- For each issue, state what specific change to the proposed AD is being requested.
- Include justification (e.g., reasons or data) for each request.

Comments are specifically invited on the overall regulatory, economic, environmental, and energy aspects of the proposed rule. All comments submitted will be available, both before and after the closing date for comments, in the Rules Docket for examination by interested persons. A report summarizing each FAA-public contact concerned with the substance of this proposal will be filed in the Rules Docket.

Commenters wishing the FAA to acknowledge receipt of their comments submitted in response to this notice must submit a self-addressed, stamped postcard on which the following statement is made: ''Comments to Docket Number 2000–NM–226–AD.''

The postcard will be date stamped and returned to the commenter.

Availability of NPRMs

Any person may obtain a copy of this NPRM by submitting a request to the FAA, Transport Airplane Directorate, ANM–114, Attention: Rules Docket No. 2000–NM–226–AD, 1601 Lind Avenue, SW., Renton, Washington 98055–4056.

Discussion

The FAA has received reports that fiberglass insulation material installed on the outside of the ducts of the environmental control system (ECS) on certain Boeing Model 737, 747, 757, and 767 series airplanes does not meet fire safety requirements. During fire testing, samples of fiberglass insulation from the ECS ducts, with BMS8–142 vapor barrier bonded to the outer surface of the insulation with BAC5010 Type 97 adhesive, burned at a rate faster than allowed by section 25.853 (''Fire Protection: Compartment Interiors'') of the Federal Aviation Regulations (14 CFR 25.853). This condition, if not corrected, could result in potential ignition of the fiberglass insulation installed on the ECS ducts, which could propagate a small fire and lead to a larger fire.

Other Relevant Rulemaking

On May 19, 2000, the FAA issued AD 2000–11–01, amendment 39–11749 (65 FR 34322, May 26, 2000), which is applicable to certain McDonnell Douglas Model DC–9–80 and MD–90–30 series airplanes and Model MD–88 airplanes; and AD 2000–11–02, amendment 39–11750 (65 FR 34341, May 26, 2000), which is applicable to certain McDonnell Douglas Model DC–10–10F, DC–10–15, DC–10–30, DC–10–30F, DC–10–40, MD–11, and MD–11F series airplanes. These AD's require determination of whether, and at what locations, insulation blankets made of metallized polyethyleneteraphthalate (MPET) are installed, and replacement of any MPET insulation blankets with new blankets made of metallized Tedlar or equivalent blanket material. Those AD's were prompted by reports of fires (in flight and on the ground) on certain airplanes equipped with MPET insulation blankets. Such insulation blankets could propagate a small fire that is the result of an otherwise harmless electrical arc, and could result in a much larger fire.

The unsafe condition addressed by those AD's is similar to that addressed in this proposed AD. The fiberglass insulation with BMS8–142 vapor barrier bonded to the outer surface with BAC5010 Type 97 adhesive, which is the subject of this AD, can be ignited by a small ignition source and propagate a fire in a manner similar to the MPET insulation blankets. AD 2000–11–01 and AD 2000–11–02 require replacement of MPET insulation blankets with new blankets; this proposed AD would require rework of the ECS duct assemblies or replacement of the duct assemblies with new or reworked duct assemblies. The FAA finds that rework of the duct assemblies will ensure an acceptable level of safety for the affected airplanes addressed in this proposed AD.

A similar unsafe condition exists in drip shields on certain Boeing Model 747, 757, 767, and 777 series airplanes. Some drip shields are assembled with the moisture barrier cover bonded to the insulation and multiple insulation layers bonded together using a non-flame-resistant adhesive. Such assembly of the drip shield reduces the fire resistance of the moisture barrier cover and insulation. As a result, the drip shield assemblies do not meet the requirements of section 25.853 (''Fire Protection: Compartment Interiors'') of the Federal Aviation Regulations (14 CFR 25.853). This condition, if not corrected, could result in potential ignition of the moisture barrier cover of the drip shield, which could propagate a small fire that results from an otherwise harmless electrical arc, leading to a larger fire. A separate rulemaking action [notice of proposed rulemaking, Rules Docket No. 2000–NM–217–AD] is being issued to address that unsafe condition on affected airplanes.

Explanation of Relevant Service Information

The FAA has reviewed and approved Boeing Alert Service Bulletins 737–21A1129, 747–21A2416, 757–21A0084, 757–21A0085, and 767–21A0158; all including Appendices A and B; all dated June 29, 2000. Those service bulletins describe procedures for rework of certain ECS duct assemblies or replacement of the duct assemblies with new or reworked duct assemblies. The rework involves replacement of existing fiberglass insulation with new insulation. Accomplishment of the actions specified in the service bulletins is intended to adequately address the identified unsafe condition.

Explanation of Requirements of Proposed Rule

Since an unsafe condition has been identified that is likely to exist or develop on other products of this same type design, the proposed AD would require accomplishment of the actions specified in the applicable service bulletin described previously, except as discussed below.

Differences Between Proposed Rule and Service Bulletins

Operators should note that the service bulletins specify that the rework or replacement of the ECS ducts is to be accomplished at the next heavy maintenance check. The FAA finds that such a compliance time will not ensure that the rework or replacement is accomplished in a timely manner. In developing an appropriate compliance time for this AD, the FAA considered not only the manufacturer's recommendation, but the degree of urgency associated with addressing the subject unsafe condition, as well as the compliance time for the actions required by the previously described AD 2000–11–01 and AD 2000–11–02. AD 2000–11–01 and AD 2000–11–02 require replacement of MPET insulation blankets on affected airplanes within five years after June 30, 2000 (the effective date of those AD's). In light of all of these factors, and especially the similarity of the unsafe condition addressed in this proposed AD to that addressed in the AD's described previously, the FAA finds a compliance time of five years after the effective date of this AD for initiating the proposed actions to be warranted, in that it represents an appropriate interval of time allowable for affected airplanes to continue to operate without compromising safety.

Cost Impact

There are approximately 1,162 airplanes of the affected design in the worldwide fleet. The FAA estimates that 403 airplanes of U.S. registry would be affected by this proposed AD. The following table shows the estimated cost impact of the proposed actions for airplanes affected by this AD. The average labor rate is $60 per work hour. The estimated total cost for all airplanes affected by this proposed AD is $2,552,996.

Model	U.S.-registered airplanes	Work hours (estimated)	Labor cost (estimated)	Parts cost (estimated)	Fleet cost (estimated)
737	113	32	$1,920	$732	$299,676
747	23	336	20,160	2,800	528,080
757	199	47	2,820	360	632,820
767	68	238	14,280	1,785	1,092,420

The cost impact figures discussed above are based on assumptions that no operator has yet accomplished any of the proposed requirements of this AD action, and that no operator would accomplish those actions in the future if this proposed AD were not adopted. The cost impact figures discussed in AD rulemaking actions represent only the time necessary to perform the specific actions actually required by the AD. These figures typically do not include incidental costs, such as the time required to gain access and close up, planning time, or time necessitated by other administrative actions.

The manufacturer has advised the FAA that warranty remedies may be available for parts and labor costs associated with accomplishing the actions that would be required by this proposed AD. Therefore, the future economic cost impact of this rule on U.S. operators may be less than the cost impact figures indicated above.

Regulatory Impact

The regulations proposed herein would not have a substantial direct effect on the States, on the relationship between the national Government and the States, or on the distribution of power and responsibilities among the various levels of government. Therefore, it is determined that this proposal would not have federalism implications under Executive Order 13132.

For the reasons discussed above, I certify that this proposed regulation (1) is not a ''significant regulatory action'' under Executive Order 12866; (2) is not a ''significant rule'' under the DOT Regulatory Policies and Procedures (44 FR 11034, February 26, 1979); and (3) if promulgated, will not have a significant economic impact, positive or negative, on a substantial number of small entities under the criteria of the Regulatory Flexibility Act. A copy of the draft regulatory evaluation prepared for this action is contained in the Rules Docket. A copy of it may be obtained by contacting the Rules Docket at the location provided under the caption **ADDRESSES.**

List of Subjects in 14 CFR Part 39

Air transportation, Aircraft, Aviation safety, Safety.

The Proposed Amendment

Accordingly, pursuant to the authority delegated to me by the Administrator, the Federal Aviation Administration proposes to amend part 39 of the Federal Aviation Regulations (14 CFR part 39) as follows:

PART 39—AIRWORTHINESS DIRECTIVES

1. The authority citation for part 39 continues to read as follows:

Authority: 49 U.S.C. 106(g), 40113, 44701.

§ 39.13 [Amended]

2. Section 39.13 is amended by adding the following new airworthiness directive:

Boeing: Docket 2000–NM–226–AD.

Applicability: Model 737–300, 737–400, 737–500, 747, 757–200, 757–300, 767–200, 767–300, and 767–300F series airplanes having the line numbers listed below; certificated in any category.

Model	Affected line numbers (L/N)	Except L/N
737–300, –400, –500	2591, 2601, 2720, 2723, 2730, 2733, 2734, 2736 through 2850 inclusive, 2852 through 3126 inclusive.	N/A
747	1011 through 1233 inclusive	1012, 1174, 1216.
757–200, –300	580 through 895 inclusive	581, 583 through 586 inclusive, 589, 595, 609, 613, 615, 622, 624, 626, 669, 674.
767–200, –300, –300F.	521 through 767 inclusive, 770	522, 525, 718, 758.

Note 1: This AD applies to each airplane identified in the preceding applicability provision, regardless of whether it has been modified, altered, or repaired in the area subject to the requirements of this AD. For airplanes that have been modified, altered, or repaired so that the performance of the requirements of this AD is affected, the owner/operator must request approval for an alternative method of compliance in accordance with paragraph (b) of this AD. The request should include an assessment of the effect of the modification, alteration, or repair on the unsafe condition addressed by this AD; and, if the unsafe condition has not been eliminated, the request should include specific proposed actions to address it.

Compliance: Required as indicated, unless accomplished previously.

To prevent potential ignition of fiberglass insulation in the environmental control system (ECS) ducts, which could propagate a small fire and lead to a larger fire, accomplish the following:

Rework or Replacement

(a) Within 5 years after the effective date of this AD, rework ECS duct assemblies or replace existing duct assemblies with new or reworked duct assemblies, in accordance with Boeing Alert Service Bulletins 737–21A1129, 747–21A2416, 757–21A0084, 757–21A0085, or 767–21A0158; all including Appendices A and B; all dated June 29, 2000; as applicable.

Alternative Methods of Compliance

(b) An alternative method of compliance or adjustment of the compliance time that provides an acceptable level of safety may be used if approved by the Manager, Seattle Aircraft Certification Office (ACO), FAA. Operators shall submit their requests through an appropriate FAA Principal Maintenance Inspector, who may add comments and then send it to the Manager, Seattle ACO.

Note 2: Information concerning the existence of approved alternative methods of compliance with this AD, if any, may be obtained from the Seattle ACO.

Special Flight Permits

(c) Special flight permits may be issued in accordance with sections 21.197 and 21.199 of the Federal Aviation Regulations (14 CFR 21.197 and 21.199) to operate the airplane to a location where the requirements of this AD can be accomplished.

Issued in Renton, Washington, on August 4, 2000.

Donald L. Riggin,

Acting Manager, Transport Airplane Directorate, Aircraft Certification Service.

[FR Doc. 00–20244 Filed 8–9–00; 8:45 am]

BILLING CODE 4910–13–P

DEPARTMENT OF TRANSPORTATION

Federal Aviation Administration

14 CFR Part 39

[Docket No. 2000–NM–217–AD]

RIN 2120–AA64

Airworthiness Directives; Boeing Model 747, 757, 767, and 777 Series Airplanes

AGENCY: Federal Aviation Administration, DOT.

ACTION: Notice of proposed rulemaking (NPRM).

SUMMARY: This document proposes the adoption of a new airworthiness directive (AD) that is applicable to certain Boeing Model 747, 757, 767, and 777 series airplanes. This proposal would require modification of certain drip shields located on the flight deck, and follow-on actions. This action is necessary to prevent potential ignition of the moisture barrier cover of the drip shield, which could propagate a small fire that results from an otherwise harmless electrical arc, leading to a larger fire. This action is intended to address the identified unsafe condition.

DATES: Comments must be received by September 25, 2000.

ADDRESSES: Submit comments in triplicate to the Federal Aviation Administration (FAA), Transport Airplane Directorate, ANM–114, Attention: Rules Docket No. 2000–NM–217–AD, 1601 Lind Avenue, SW., Renton, Washington 98055–4056. Comments may be inspected at this location between 9:00 a.m. and 3:00 p.m., Monday through Friday, except Federal holidays. Comments may be submitted via fax to (425) 227–1232. Comments may also be sent via the Internet using the following address: 9-anm-nprmcomment@faa.gov. Comments sent via fax or the Internet must contain ''Docket No. 2000–NM–217–AD'' in the subject line and need not be submitted in triplicate. Comments sent via the Internet as attached electronic files must be formatted in Microsoft Word 97 for Windows or ASCII text.

The service information referenced in the proposed rule may be obtained from Boeing Commercial Airplane Group, P.O. Box 3707, Seattle, Washington 98124–2207. This information may be examined at the FAA, Transport Airplane Directorate, 1601 Lind Avenue, SW., Renton, Washington.

FOR FURTHER INFORMATION CONTACT: James Cashdollar, Aerospace Engineer, Airframe Branch, ANM–120S, FAA, Seattle Aircraft Certification Office, 1601 Lind Avenue, SW., Renton, Washington 98055–4056; telephone (425) 227–2785; fax (425) 227–1181.

SUPPLEMENTARY INFORMATION:

Comments Invited

Interested persons are invited to participate in the making of the proposed rule by submitting such written data, views, or arguments as they may desire. Communications shall identify the Rules Docket number and be submitted in triplicate to the address specified above. All communications received on or before the closing date for comments, specified above, will be considered before taking action on the proposed rule. The proposals contained in this notice may be changed in light of the comments received.

Submit comments using the following format:

- Organize comments issue-by-issue. For example, discuss a request to change the compliance time and a request to change the service bulletin reference as two separate issues.
- For each issue, state what specific change to the proposed AD is being requested.
- Include justification (e.g., reasons or data) for each request.

Comments are specifically invited on the overall regulatory, economic, environmental, and energy aspects of the proposed rule. All comments submitted will be available, both before and after the closing date for comments, in the Rules Docket for examination by interested persons. A report summarizing each FAA-public contact concerned with the substance of this proposal will be filed in the Rules Docket.

Commenters wishing the FAA to acknowledge receipt of their comments submitted in response to this notice must submit a self-addressed, stamped postcard on which the following statement is made: ''Comments to Docket Number 2000–NM–217–AD.'' The postcard will be date stamped and returned to the commenter.

Availability of NPRMs

Any person may obtain a copy of this NPRM by submitting a request to the FAA, Transport Airplane Directorate, ANM–114, Attention: Rules Docket No. 2000–NM–217–AD, 1601 Lind Avenue, SW., Renton, Washington 98055–4056.

Discussion

The FAA has received a report that; on certain Boeing Model 747, 757, 767, and 777 series airplanes; the airplane manufacturer found some drip shields assembled with the moisture barrier cover bonded to the insulation and multiple insulation layers bonded together using a non-flame-resistant adhesive. Such assembly of the drip shield reduces the fire resistance of the moisture barrier cover and insulation. As a result, the drip shield assemblies do not meet the requirements of Section 25.853 (''Fire Protection: Compartment Interiors'') of the Federal Aviation Regulations (14 CFR 25.853). This condition, if not corrected, could result in potential ignition of the moisture barrier cover of the drip shield, which could propagate a small fire that results from an otherwise harmless electrical arc, leading to a larger fire.

Other Relevant Rulemaking

On May 19, 2000, the FAA issued AD 2000–11–01, amendment 39–11749 (65 FR 34322, May 26, 2000), which is applicable to certain McDonnell Douglas Model DC–9–80 and MD–90–30 series airplanes and Model MD–88 airplanes; and AD 2000–11–02, amendment 39–11750 (65 FR 34341, May 26, 2000), which is applicable to certain McDonnell Douglas Model DC–10–10F, DC–10–15, DC–10–30, DC–10–30F, DC–10–40, MD–11, and MD–11F series airplanes. These AD's require determination of whether, and at what locations, insulation blankets made of metallized polyethyleneteraphthalate (MPET) are installed, and replacement of any MPET insulation blankets with new blankets made of metallized Tedlar or equivalent blanket material. Those AD's were prompted by reports of fires (in flight and on the ground) on certain airplanes equipped with MPET insulation blankets. Such insulation blankets could propagate a small fire that is the result of an otherwise harmless electrical arc, and could result in a much larger fire.

The unsafe condition addressed by those AD's is similar to that addressed in this proposed AD. The material used to manufacture the drip shields that are the subject of this AD can be ignited by a small ignition source and propagate a fire in a manner similar to the MPET insulation blankets. However, while AD 2000–11–01 and AD 2000–11–02 require replacement of MPET insulation blankets with new blankets, this proposed AD would require isolation of the drip shields from all potential

ignition sources rather than replacement of the drip shields. The decision to mandate modification of the drip shields rather than replacement of the drip shields with new drip shields made of another material is based on the difficulties associated with removing the drip shields from the airplane (for example, disassembly of flight deck and disconnection of wiring for flight controls). The FAA finds that, in lieu of replacement of the drip shields, modification of the drip shields to isolate them from all potential ignition sources will ensure an acceptable level of safety.

A similar unsafe condition exists related to fiberglass insulation installed on the ducts of the environmental control system (ECS) on certain Boeing Model 737, 747, 757, and 767 series airplanes. During fire testing, samples of fiberglass insulation from the ECS ducts, with BMS8–142 vapor barrier bonded to the outer surface of the insulation with BAC5010 Type 97 adhesive, burned at a rate faster than allowed by Section 25.853 (''Fire Protection: Compartment Interiors'') of the Federal Aviation Regulations (14 CFR 25.853). This condition, if not corrected, could result in potential ignition of fiberglass insulation in the ECS ducts, which could propagate a small fire and lead to a larger fire. A separate rulemaking action [notice of proposed rulemaking, Rules Docket No. 2000–NM–226–AD] is being issued to address that unsafe condition on affected airplanes.

Explanation of Relevant Service Information

The FAA has reviewed and approved Boeing Service Bulletins 747–25–3253, 767–25–0290, and 777–25–0164; all including Appendices A, B, and C; all dated June 29, 2000; and 757–25–0226 and 757–25–0228; both including Appendices A, B, and C; both dated July 3, 2000. These service bulletins describe procedures for modification of certain drip shields located on the flight deck, and follow-on actions. The modification involves installation of fire blocks in areas where the drip shields are exposed to potential ignition sources. The fire block consists of fire-resistant flexible cargo liner fabric as a primary barrier. For large gaps between the drip shield and structure, the fire block uses fire-resistant foam and glass fabric. As follow-on actions, the service bulletins describe procedures for a one-time functional test of any system disturbed during the modification of the drip shields, and installation of placards to inform maintenance personnel that the drip shields have been fire blocked and any modification must be accomplished in accordance with the applicable service bulletin. Accomplishment of the actions specified in the service bulletins is intended to adequately address the identified unsafe condition.

In addition, Boeing Service Bulletins 747–25–3253 and 767–25–0290 describe procedures to allow sampling of the insulation and adhesive of the drip shields on certain airplanes, in lieu of the modification described above. The service bulletins recommend that operators take samples of the drip shields on these airplanes and submit the samples to Boeing for testing. If the testing of all of the samples yields positive results, modification of the airplane with fire blocks is not necessary. If the testing is negative, the airplane must be modified in accordance with the applicable service bulletin.

Explanation of Requirements of Proposed Rule

Since an unsafe condition has been identified that is likely to exist or develop on other products of this same type design, the proposed AD would require accomplishment of the actions specified in the applicable service bulletins described previously, except as discussed below. For Model 747 and 767 series airplanes listed in Group 1 in the applicable service bulletins, the proposed AD would allow accomplishment of the optional sampling of drip shields described previously.

Differences Between Proposed Rule and Service Bulletins

Operators should note that the service bulletins specify that the modification of the drip shields is to be accomplished at the next heavy maintenance check. The FAA finds that such a compliance time will not ensure that the modifications are accomplished in a timely manner. In developing an appropriate compliance time for this AD, the FAA considered not only the manufacturer's recommendation, but the degree of urgency associated with addressing the subject unsafe condition, as well as the compliance time for the actions required by the previously described AD 2000–11–01 and AD 2000–11–02. AD 2000–11–01 and AD 2000–11–02 require replacement of MPET insulation blankets on affected airplanes within five years after June 30, 2000 (the effective date of those AD's). In light of all of these factors, and especially the similarity of the unsafe condition addressed in this proposed AD to that addressed in the AD's described previously, the FAA finds a compliance time of five years after the effective date of this AD for initiating the proposed actions to be warranted, in that it represents an appropriate interval of time allowable for affected airplanes to continue to operate without compromising safety.

In addition, operators should note that the service bulletins specify that methods for modification of any areas of the drip shield where wires or equipment were added on the outboard surface of the drip shield (that is, between the drip shield and the airplane structure) ''must be approved separately.'' However, the service bulletins do not specify who must approve these methods. Therefore, paragraph (b) of this proposed AD specifies that modification of these areas must be accomplished in accordance with a method approved by the Manager, Seattle Aircraft Certification Office, FAA.

Operators also should note that, although Boeing Service Bulletin 777–25–0164 does not direct operators to perform a functional test on any system disturbed during the modification of the drip shield, the FAA has determined that such a functional test is necessary. Therefore, the functional tests required by paragraph (a)(2) of this AD applies to all airplanes affected by this AD. The functional tests must be accomplished in accordance with the applicable chapter of the applicable Airplane Maintenance Manual (AMM). Also, none of the relevant service bulletins specify corrective actions if any functional test fails. Therefore, paragraph (a)(2) of this AD requires, if any functional test fails, isolation of the fault, correction of the discrepancy in accordance with the applicable AMM, and repetition of the failed test until it is successfully accomplished.

Cost Impact

There are approximately 3,137 airplanes of the affected design in the worldwide fleet. The FAA estimates that 999 airplanes of U.S. registry would be affected by this proposed AD. The following table shows the estimated cost impact for airplanes affected by this AD. The average labor rate is $60 per work hour. The estimated maximum total cost for all airplanes affected by this proposed AD is $3,695,460.

Model	U.S.-registered airplanes	Work hours (estimated)	Labor cost (estimated)	Parts cost (estimated)	Maximum fleet cost (estimated)
747	194	39	$2,340	$2,300 to 3,500	$1,132,960
757	491	26	1,560	1,700	1,600,660
767	258	17	1,020	2,300	856,560
777	56	3	180	1,700	105,280

For Model 747 and 767 series airplanes listed in Group 1 in the applicable service bulletin, in lieu of accomplishment of the modification of the drip shields, this proposed AD provides an option to take samples of the drip shields to determine if the modification is necessary. Therefore, the cost impact of this proposed AD as presented above may be reduced if some airplanes do not need the modification. For airplanes that accomplish the sampling, it would take approximately 18 work hours, at an average labor rate of $60 per work hour. Based on these figures, the cost impact of the sampling on affected U.S. operators is estimated to be $1,080 per airplane.

The cost impact figures discussed above are based on assumptions that no operator has yet accomplished any of the proposed requirements of this AD action, and that no operator would accomplish those actions in the future if this proposed AD were not adopted. The cost impact figures discussed in AD rulemaking actions represent only the time necessary to perform the specific actions actually required by the AD. These figures typically do not include incidental costs, such as the time required to gain access and close up, planning time, or time necessitated by other administrative actions.

The manufacturer has advised the FAA that warranty remedies may be available for parts and labor costs associated with accomplishing the actions that would be required by this proposed AD. Therefore, the future economic cost impact of this rule on U.S. operators may be less than the cost impact figures indicated above.

Regulatory Impact

The regulations proposed herein would not have a substantial direct effect on the States, on the relationship between the national Government and the States, or on the distribution of power and responsibilities among the various levels of government. Therefore, it is determined that this proposal would not have federalism implications under Executive Order 13132.

For the reasons discussed above, I certify that this proposed regulation (1) is not a ''significant regulatory action'' under Executive Order 12866; (2) is not a ''significant rule'' under the DOT Regulatory Policies and Procedures (44 FR 11034, February 26, 1979); and (3) if promulgated, will not have a significant economic impact, positive or negative, on a substantial number of small entities under the criteria of the Regulatory Flexibility Act. A copy of the draft regulatory evaluation prepared for this action is contained in the Rules Docket. A copy of it may be obtained by contacting the Rules Docket at the location provided under the caption **ADDRESSES.**

List of Subjects in 14 CFR Part 39

Air transportation, Aircraft, Aviation safety, Safety.

The Proposed Amendment

Accordingly, pursuant to the authority delegated to me by the Administrator, the Federal Aviation Administration proposes to amend part 39 of the Federal Aviation Regulations (14 CFR part 39) as follows:

PART 39—AIRWORTHINESS DIRECTIVES

1. The authority citation for part 39 continues to read as follows:

Authority: 49 U.S.C. 106(g), 40113, 44701.

§ 39.13 [Amended]

2. Section 39.13 is amended by adding the following new airworthiness directive:

Boeing: Docket 2000–NM–217–AD.

Applicability: Model 747, 757, 767, and 777 series airplanes having the line numbers listed below; certificated in any category.

Model	Affected line numbers (L/N)	Except L/N
747	1 through 1234 inclusive	1174, 1216
757	2 through 895 inclusive	870, 886, 894
767	1 through 768 inclusive	758
777	2 through 254 inclusive	120, 219, 230, 235, 242, 245, 249

Note 1: This AD applies to each airplane identified in the preceding applicability provision, regardless of whether it has been modified, altered, or repaired in the area subject to the requirements of this AD. For airplanes that have been modified, altered, or repaired so that the performance of the requirements of this AD is affected, the owner/operator must request approval for an alternative method of compliance in accordance with paragraph (d) of this AD. The request should include an assessment of the effect of the modification, alteration, or repair on the unsafe condition addressed by this AD; and, if the unsafe condition has not been eliminated, the request should include specific proposed actions to address it.

Compliance: Required as indicated, unless accomplished previously.

To prevent potential ignition of the moisture barrier cover of the drip shield, which could propagate a small fire that results from an otherwise harmless electrical arc, leading to a larger fire, accomplish the following:

Modification

(a) Within 5 years after the effective date of this AD, accomplish paragraphs (a)(1), (a)(2), and (a)(3) of this AD; in accordance with Boeing Service Bulletin 747–25–3253, 767–25–0290, or 777–25–0164; all including Appendices A, B, and C; all dated June 29, 2000; or 757–25–0226 or 757–25–0228; both including Appendices A, B, and C; both dated July 3, 2000; as applicable; except as provided by paragraph (b) of this AD.

(1) Modify drip shields located on the flight deck by installing fire blocks.

(2) Prior to further flight following accomplishment of paragraph (a)(1) of this AD, perform a functional test of any system disturbed by the modification, in accordance with the applicable service bulletin or the Airplane Maintenance Manual (AMM), as applicable. If any functional test fails, prior to further flight, isolate the fault, correct the

discrepancy in accordance with the applicable AMM, and repeat the failed test until it is successfully accomplished.

(3) Prior to further flight following the accomplishment of paragraphs (a)(1) and (a)(2) of this AD, install placards on all modified drip shields.

(b) If any wires or equipment are installed on the outboard surface of the drip shield (that is, between the drip shield and the airplane structure), modify that area in accordance with a method approved by the Manager, Seattle Aircraft Certification Office (ACO), FAA.

Optional Sampling (Certain Model 747 and 767 Series Airplanes)

(c) For Model 747 and 767 series airplanes listed in Group 1 in Boeing Service Bulletins 747–25–3253 and 767–25–0290: In lieu of accomplishment of paragraph (a) of this AD, within 5 years after the effective date of this AD, collect samples of the insulation and adhesive of the drip shields, and submit the samples to the manufacturer for testing, in accordance with Boeing Service Bulletin 747–25–3253 or 767–25–0290; both including Appendices A, B, and C; both dated June 29, 2000; as applicable.

(1) If the test on all samples is positive, no further action is required by this AD.

(2) If the test on any sample is negative, accomplish paragraph (a) of this AD before the compliance time specified in that paragraph.

Alternative Methods of Compliance

(d) An alternative method of compliance or adjustment of the compliance time that provides an acceptable level of safety may be used if approved by the Manager, Seattle ACO. Operators shall submit their requests through an appropriate FAA Principal Maintenance Inspector, who may add comments and then send it to the Manager, Seattle ACO.

Note 2: Information concerning the existence of approved alternative methods of compliance with this AD, if any, may be obtained from the Seattle ACO.

Special Flight Permits

(e) Special flight permits may be issued in accordance with sections 21.197 and 21.199 of the Federal Aviation Regulations (14 CFR 21.197 and 21.199) to operate the airplane to a location where the requirements of this AD can be accomplished.

Issued in Renton, Washington, on August 4, 2000.

Donald L. Riggin,

Acting Manager, Transport Airplane Directorate, Aircraft Certification Service.

[FR Doc. 00–20243 Filed 8–9–00; 8:45 am]

BILLING CODE 4910–13–P

DEPARTMENT OF THE TREASURY

Bureau of Alcohol, Tobacco and Firearms

27 CFR Part 9

[Notice No. 901]

RIN 1512–AA07

Proposal To Establish a River Junction Viticultural Area (98R–192P)

AGENCY: Bureau of Alcohol, Tobacco and Firearms (ATF), Department of the Treasury.

ACTION: Notice of proposed rulemaking.

SUMMARY: The Bureau of Alcohol, Tobacco and Firearms (ATF) is considering the establishment of a viticultural area located in southern San Joaquin County, California, to be known as ''River Junction.'' This proposed viticultural area is the result of a petition filed by Mr. Ronald W. McManis. ATF believes that the establishment of viticultural areas and the subsequent use of viticultural area names as appellations of origin in wine labeling and advertising allow wineries to designate the specific areas where the grapes used to make the wine were grown and enable consumers to better identify the wines they purchase.

DATES: Written comments must be received by Ocotber 10, 2000.

ADDRESSES: Send comments to: Chief, Regulations Division, Bureau of Alcohol, Tobacco and Firearms, P.O. Box 50221, Washington, DC 20091–0221; *ATTN: Notice No. 901.* For additional information on submitting comments, see the Public Participation section.

A copy of the petition, the proposed regulations, the appropriate maps, and any written comments in response to this notice of proposed rulemaking will be available for public inspection during normal business hours at: ATF Reference Library, Office of Liaison and Public Information, Room 6480, 650 Massachusetts Avenue, NW, Washington, DC 20226.

FOR FURTHER INFORMATION CONTACT: Tim DeVanney, Regulations Division, 650 Massachusetts Avenue, NW, Washington, DC 20226; Telephone (202) 927–8196.

SUPPLEMENTARY INFORMATION:

Background

On August 23, 1978, ATF published Treasury Decision ATF–53 (43 FR 37672, 54624) revising regulations in 27 CFR part 4. These regulations allow the establishment of definite American viticultural areas. The regulations also allow the name of an approved viticultural area to be used as an appellation of origin in the labeling and advertising of wine.

On October 2, 1979, ATF published Treasury Decision ATF–60 (44 FR 56692), which added a new part 9 to 27 CFR, providing for the listing of approved American viticultural areas. Section 4.25a(e)(1), Title 27, Code of Federal Regulations, defines an American viticultural area as a delimited grape-growing region distinguishable by geographical features, the boundaries of which have been delineated in subpart C of part 9. Section 4.25a(e)(2) outlines the procedure for proposing an American viticultural area. Any interested person may petition ATF to establish a grape-growing region as a viticultural area. The petition should include:

(a) Evidence that the name of the proposed viticultural area is locally and/or nationally known as referring to the area specified in the petition;

(b) Historical or current evidence that the boundaries of the viticultural area are as specified in the petition;

(c) Evidence relating to the geographical features (climate, soil, elevation, physical features, etc.) which distinguish the viticultural features of the proposed area from surrounding areas;

(d) A description of the specific boundaries of the viticultural area, based on features which can be found on United States Geological Survey (U.S.G.S.) maps of the largest applicable scale; and

(e) A copy of the appropriate U.S.G.S. map(s) with the boundaries prominently marked.

Petition

ATF has received a petition from Mr. Ronald W. McManis, proposing to establish a new viticultural area in southern San Joaquin County, California, to be known as ''River Junction.'' The proposed viticultural area is located at the western edge of San Joaquin Valley (also known as the Central Valley) and the southernmost edge of the Sacramento-San Joaquin River Delta. It contains approximately 1,300 contiguous acres, of which 740 are currently planted to vineyards. Present agricultural use of the area is primarily 700 acres of Chardonnay grapes. An additional 40 acres are planted to Cabernet Sauvignon grapes.

Evidence That the Name River Junction Is Locally or Nationally Known

According to the petitioner, the origin of the name, ''River Junction,'' refers to the junction of the Stanislaus River with

the San Joaquin River. Mr. McManis states, ''The name is in prominent use within the proposed viticultural area, undoubtedly because of the significant prehistoric, historic, and ongoing influence of the rivers' confluence on the immediate area.'' The petitioner owns a vineyard in the proposed viticultural area. The property, purchased in the early 1990's, was previously known as ''River Junction Vineyards.'' The petitioner submitted a vineyard block map of his ranch which shows the historical ownership of the vineyards by the designation ''R'' for ''River Junction Vineyards.'' These vineyards are located within the proposed viticultural area.

The name ''River Junction'' is also used for River Junction Reclamation District No. 2064, a State of California Special District dating from at least 1925. River Junction Reclamation District includes Bret Harte Gardens subdivision, filed October 11, 1922. Since this subdivision assumes reclamation within the District, it seems likely that ''River Junction,'' as a District name, dates at least to 1922. The name is also used for River Junction Farms subdivision no. 2 within the River Junction Reclamation District.

Historical or Current Evidence That the Boundaries of the Proposed Viticultural Area Are Specified in the Petition

The petitioner states that the proposed viticultural area is bounded on the north by an old river terrace shelf delineated by Division Road; on the northwest by a drainage boundary enhanced and delineated by Airport Way; on the west and south by the San Joaquin River; and on the south and east by the Stanislaus River.

According to the petitioner, following the Federal Swampland Act of 1850, reclamation of wetlands was begun. The petitioner states that a portion of the proposed area was designated as a State Reclamation District, River Junction Reclamation District No. 2064, and that the proposed River Junction viticultural area ''* * * occupies the southern one-third of the California State Reclamation District No. 2064 and is the same as River Junction Farms Subdivision No. 2, except that it does not include 195 acres at the northeast corner of that subdivision.''

As indicated, the petitioner owns a vineyard in the proposed viticultural area. Most of the property, purchased in the early 1990's, was previously known as River Junction Vineyards and is located within the northwest and southwest boundaries of the proposed viticultural area, west of Two Rivers Road.

Evidence Relating to the Geographical Features

Topography

The petitioner has supplied the following topographical evidence to show that the proposed area is distinct from surrounding areas:

(a) *South, east and west boundaries.* The proposed River Junction viticultural area is bounded on the west by relatively steep slopes and the San Joaquin River, and is bounded on the south and east by gentle, nearly flat topography and the Stanislaus River. The proposed area is locally unique in terms of topography: Its gentle, persistent southwest slope and higher boundaries form a shallow, slightly tilted bowl about 18 to 25 feet in elevation at the center. Original natural boundaries to the west, south and east have been exaggerated by engineered, permanent levees that range from about 35 to 42 feet in elevation. Geographical analyses, provided by the petitioner, show a transect through the proposed River Junction viticultural area and illustrate the elevation differences that distinguish it.

(b) *Northern boundary.* The northern boundary of the proposed area is an abrupt, natural elevation change at about the 29 foot contour, delineated by Division Road. Physical evidence indicates that Division Road was placed on the upper side of a pre-existing natural river terrace boundary. The topographic change marked by the road exactly follows geologic and soil type boundaries extending from the east to the center of section 7 on the Ripon, CA quadrangle map T3S/R7E and westward to Airport Way. The natural extension of ''Red Bridge Slough'' to the northwest is further evidence that this boundary is a natural river terrace.

(c) *Northwest boundary.* The northwest boundary of the proposed River Junction viticultural area is delineated by Airport Way, a subtle natural high that is exaggerated by the raised roadbed. Elevation ranges from about 29 to 35 feet. Available geologic and historic evidence strongly supports the conclusion that, like Division Road, Airport Way follows a natural topographic high. The U.S.G.S. maps submitted by the petitioner show two separate sloughs draining from the Airport Way/Division Road intersection. An unnamed slough on the U.S.G.S. Ripon, CA quadrangle map drains southeast through the proposed River Junction viticultural area, while the other slough, called ''Red Bridge Slough'' on the U.S.G.S. Vernalis, CA quadrangle map, flows in the opposite direction. A 1925 Reclamation District Map (''southern part'') provided by the petitioner also shows the two sloughs. These two sloughs coincide with occurrences of Merritt soils, which fan out to the northwest and southeast of the Airport Way/Division Road intersection. This provides further evidence that the intersection of Airport Way and Division Road has historically sat on naturally higher topography from which the soils accumulated downhill in two directions.

Soil

The petitioner provided the following evidence regarding the soil composition of the proposed River Junction viticultural area:

(a) *Formation and distribution of local soils.* The proposed River Junction viticultural area contains soils that are generally grouped as alluvial, and which formed on the geologic parent material of recent river channel deposits that are exposed in, and partly define, the proposed area. Soils that formed on the stream channel deposits and derived from these deposits, are similar to one another in nature, and are characteristic of the parent sedimentary deposits. These soils are identified as ''recent alluvial floodplains soils'' and ''delta and floodplains soils'' in the U.S. Department of Agriculture soils reports for San Joaquin and Stanislaus counties.

Where the Stanislaus River joins the San Joaquin River, bounding topography is steeper to the west and flatter to the east, thus restricting the westward limits of soils. West of the San Joaquin River, northeast facing slopes limit alluvial soils to an area only about ½ mile or less in width. These soils, primarily Merritt-Columbia-Dello series and Dospalos-Bolfar complex, are bounded on the west by basin soils of the Willows-Pescadero series and terrace soils of the Capay series. Conversely, east of the San Joaquin River, flatter topography has allowed alluvial soils to accumulate to a width of 1 to 1½ miles.

South of the Stanislaus River there are mostly Columbia-Temple series soils, bounded by basin soils of the Waukena-Fresno association, and alluvial fan soils of the Modesto-Chualar group that extend eastward.

North of the Stanislaus River, elevation is slightly higher than to the south, and topography is nearly flat but includes subtle northwest-facing and more strongly expressed southwest-facing slopes. Here the alluvial soils reach 1½ miles in width and are composed of Merritt-Grangeville-Columbia series with lesser amounts of Dello and Egbert soils. They are bounded to the east by terrace soil

groups, primarily of the Delhi-Veritas-Tinnin series.

(b) *Unique soil composition of proposed area.* The proposed River Junction viticultural area is a mix of soils that differs from the surrounding areas. Among the total soils, nearly one-half are sandy types, and about one-fourth of the total is fine sandy loam of the Grangeville series. Soil types include about 25 percent Grangeville fine sandy loam; about 50 percent Merritt silty clay loam; nearly 25 percent Columbia fine sandy loams; and less than 1 percent Veritas silty clay loam. None of the surrounding areas has nearly as high a ratio between sandy loam to clay loam soils. Grangeville sandy loam is unusual in this part of the southern delta. The single other local occurrence of Grangeville sandy loam soil is west of the San Joaquin River, 1½ miles northwest, and is less than 11 acres in area.

The petitioner states that Grangeville and Columbia series are formed in alluviums derived from granitic rock sources and the Merritt series is formed in alluviums from mixed rock sources. The Grangeville, Merritt, and Columbia series of soils are characterized as ''prime farmland.'' These soils are all very deep, less well drained, and have moderate to high water capacity. Permeability ranges from moderately slow in the Merritt series to rapid in the Columbia and Grangeville series. They occupy nearly flat areas at low elevation and are occasionally flooded. They are exceedingly fertile soils that are capable of supporting wine grapes, almonds, tomatoes, sugar beets, wheat and other crops. Grapes have been grown on Columbia soils, but apparently, in San Joaquin County at least, have not been previously grown on bottomlands with Grangeville and Merritt.

Soil samples collected on-site at the proposed viticultural area during October 1997 include one sample from each of the dominant units. According to the petitioner, brief low-power microscopic analysis from each of these samples indicated similar texture and composition. All samples contained abundant angular quartz grains and mica flakes, indicating granitic origin. These soils are mineralogically young and should be expected to be very high in available minerals.

(c) *Comparisons with surrounding areas.* The petitioner states that the proposed River Junction viticultural area is clearly distinct from all potentially comparable adjacent local tracts, including the Red Bridge Slough, Walthall Slough, and Northeast areas.

As would be expected of deposits formed along rivers, downstream alluvial soils have a wider distribution than does their parent alluvial substrate, due to stream transport, while upstream the derived soils are less widely distributed than the underlying stream channel deposits.

In the proposed River Junction viticultural area, derived alluvial soils strictly overlap but do not extend beyond their parent recent river deposits. The strict relationship between the channel deposits and their derived soils in the proposed area results in a strikingly distinct northern boundary.

The location of these soil changes corresponds to the location of a strongly expressed terrace (distinct change in elevation) which angles northwest from the Stanislaus River near its mouth. Its upper side is nearly exactly followed by Division Road. This terrace probably marks the highest flood stage in historically recent times and suggests that soils in the area are probably derived from Stanislaus River alluvium. This would explain the distinctively high granitic content of these soils as compared with the surrounding area.

The petitioner states that, in the Red Bridge Slough area (north of the proposed area's boundary following Airport Way), overlap of alluvial soils with parent channel deposits is less exact and the soils are restricted to the west of the Slough. This tract has a slight northwest slope and, based on field observation, is wetter than the proposed River Junction viticultural area. It has no strongly expressed northern or eastern boundaries, and thus would have less temperature extremes than the proposed area due to the absence of topographic enclosure.

The Red Bridge Slough area also has different soils than the proposed River Junction viticultural area. It contains about 35 percent Columbia loam. At its center it includes 10 percent Egbert silty clay loam. No Grangeville sands are present. As indicated above, the tract is part of River Junction Reclamation District No. 2064, recorded as River Junction Farms subdivision no. 3 in 1925. Durham Ferry State Recreation Area occupies about 20 percent of the tract, and the remaining part is essentially flat at 20–25 feet elevation.

Southeast of Walthall Slough, located north of the Red Bridge Slough area, the relationship between channel deposits and derived soils is obscure. Here the soils occupy a larger expanse than do the underlying stream deposits. They include nearly 40 percent Columbia soils and about 20 percent Dello clay loam. No Grangeville sands are present. Topographically, this area is essentially flat to slightly northwest sloping. In terms of soils and the microclimate that would be inferred from the flat and open topography, it is completely different from the proposed viticultural area.

To the northeast, recent river alluvium still underlies the soils but soils in this area include about 20 percent Veritas and Manteca series. No Grangeville sands are present. Otherwise, the Merritt and Columbia soils percentages are comparable to the proposed River Junction viticultural area. However, this area is higher and flatter, averaging about 30–35 feet elevation, and has no distinct topographic boundaries. Therefore, it undoubtedly has less temperature extremes than the proposed viticultural area. This area comprises about 195 acres of the original River Junction Farms subdivision no. 2.

Climate

The proposed River Junction viticultural area is shown on a Sacramento-San Joaquin Delta map (''Base Map Source—Department of Water Resources'') submitted by the petitioner. The proposed viticultural area appears within the boundaries of the aforementioned delta, at the southeasternmost tip. The petitioner claims that the southernmost edge of the Sacramento-San Joaquin River Delta is more modified by inland weather patterns than other parts of the Delta. This part of the Delta experiences more extreme high and low temperatures, although still receiving maritime influence. The proposed River Junction viticultural area is at the boundary between coastal and continental weather influence. It is subject to little rainfall (10 to 11 inches per year) and at its southernmost part lies within the rain shadow of the coast ranges to the west. This is the driest part of the Delta and can be considered as arid to semiarid with coastal influence.

The petitioner states that, as would be expected of a topographical depression, the local microclimate of the proposed River Junction viticultural area is singular. The proposed viticultural area is distinctively cooler than the immediate surrounding area (Modesto, Stockton, Tracy Carbona, Tracy Pumping Plant, and Rivercrest Vineyards). Temperature data from 1995 and 1996 were recorded by a weather station located near the center of the proposed River Junction viticultural area, at Rivercrest Vineyards. The monthly-averaged data, provided by the petitioner, show that minimum temperatures are consistently slightly cooler than elsewhere in the region, especially in summer. Average high

temperatures are similar to Antioch and Lodi, which are significantly closer to the Suisun and San Francisco Bays and would be expected to experience more coastal cooling. According to the petitioner, average low temperatures are generally the coolest among Tracy Carbona and Tracy Pumping Plant. Significantly, minimum August temperatures are 2 to 5 degrees cooler than Tracy, Stockton, and Modesto.

Grapes grown here are also subject to seasonally later frosts as pointed out by an unpublished agricultural analysis by Cook and Lider dated 1972, submitted by the petitioner.

Public Participation—Written Comments

ATF requests comments from all interested persons. ATF specifically requests comments on the clarity of the proposed rule and how it may be made easier to understand. All comments received on or before the closing date will be carefully considered.

Comments received after that date will be given the same consideration if it is practical to do so, but assurance of consideration cannot be given except as to comments received on or before the closing date.

ATF will not recognize any material in comments as confidential. Comments may be disclosed to the public. Any material that a respondent considers to be confidential or inappropriate for disclosure to the public should not be included in the comment. The name of any person submitting a comment is not exempt from disclosure.

Comments may be submitted by facsimile transmission to (202) 927–8525, provided the comments: (1) Are legible; (2) reference this notice number; (3) are 8½″ × 11″ in size; (4) contain a legible written signature; and (4) are three pages or less in length. Comments sent by FAX in excess of three pages will not be accepted. Receipt of FAX transmittals will not be acknowledged. Facsimile transmitted comments will be treated as originals.

Comments may be submitted by e-mail by sending the comments to: *nprm@atfhq.atf.treas.gov.* E-mail comments must: (1) Contain your name, mailing address, and e-mail address; (2) reference this notice number (in the heading/subject line); (3) appear legible when printed on not more than three pages 8½″ × 11″ in size. Receipt of e-mail will not be acknowledged. E-mail comments will be treated as originals.

E-mail comments may also be submitted using the comment form provided with the online copy of the proposed rule on the ATF Internet web site at: *http://www.atf.treas.gov/core/alcohol/rules/rules.htm.*

Executive Order 12866

It has been determined that this proposed regulation is not a significant regulatory action as defined by Executive Order 12866. Accordingly, this proposal is not subject to the analysis required by this Executive Order.

Regulatory Flexibility Act

It is hereby certified that this proposed regulation will not have a significant economic impact on a substantial number of small entities. The establishment of a viticultural area is neither an endorsement nor approval by ATF of the quality of wine produced in the area, but rather an identification of an area that is distinct from surrounding areas. ATF believes that the establishment of viticultural areas merely allows wineries to more accurately describe the origin of their wines to consumers, and helps consumers identify the wines they purchase. Thus, any benefit derived from the use of a viticultural area name is the result of the proprietor's own efforts and consumer acceptance of wines from the region.

Accordingly, a regulatory flexibility analysis is not required because the proposal, if promulgated as a final rule, is not expected (1) to have significant secondary, or incidental effects on a substantial number of small entities; or (2) to impose, or otherwise cause a significant increase in the reporting, recordkeeping, or other compliance burdens on a substantial number of small entities.

Paperwork Reduction Act

The provisions of the Paperwork Reduction Act of 1995 (44 U.S.C. 3507(j)) and its implementing regulations, 5 CFR part 1320, do not apply to this notice of proposed rulemaking because no requirement to collect information is proposed.

Drafting Information

The principal author of this document is Tim DeVanney, Regulations Division, Bureau of Alcohol, Tobacco and Firearms.

List of Subjects in 27 CFR Part 9

Administrative practice and procedure, Consumer protection, Viticultural areas, Wine.

Authority and Issuance

Title 27, Code of Federal Regulations, Part 9, American Viticultural Areas, is amended as follows:

PART 9—AMERICAN VITICULTURAL AREAS

Paragraph 1. The authority citation for part 9 continues to read as follows:

Authority: 27 U.S.C. 205.

Par. 2. Part 9 is amended by adding § 9.164 to subpart C as follows:

§ 9.164 River Junction.

(a) *Name.* The name of the viticultural area described in this section is ''River Junction.''

(b) *Approved maps.* The appropriate maps for determining the boundaries of the River Junction viticultural area are the following two 1:24,000 Scale U.S.G.S. topographical maps. They are titled:

(1) Ripon, CA 1969, photorevised 1980;

(2) Vernalis, CA 1969, photorevised 1980;

(c) *Boundaries.* The River Junction viticultural area is located in southern San Joaquin County, California. The boundaries are as follows:

(1) Beginning on the Vernalis, CA quadrangle map at the intersection of the secondary highway Airport Way and the San Joaquin River levee, near Benchmark 35 in T3S/R6E;

(2) Then in a southeasterly direction, follow the levee along the San Joaquin River onto the Ripon, CA quadrangle map;

(3) Then in a northerly direction around Sturgeon Bend in section 18 T3S/R7E;

(4) Then continuing in a generally southeasterly, then northeasterly direction along the levee adjoining the Stanislaus River through sections 19, 20 and 17 to the point where the levee intersects sections 17 and 8;

(5) Then continuing in a northerly direction along the levee in section 8 for approximately 1,000 feet;

(6) Then in a straight line in a northwesterly direction for approximately 100 feet to the intersection with Division Road;

(7) Then in a southwesterly, then northwesterly direction along Division Road through sections 8, 17, 18 and 7 to the intersection with the secondary highway Airport Way;

(8) Then in a southwesterly direction along Airport Way onto the Vernalis quadrangle map to the starting point at the intersection of Airport Way and the San Joaquin River levee T3S/R6E.

Dated: July 21, 2000.

Bradley A. Buckles,

Director.

[FR Doc. 00–20340 Filed 8–9–00; 8:45 am]

BILLING CODE 4810–31–P

Notices

Federal Register

Vol. 65, No. 155

Thursday, August 10, 2000

This section of the FEDERAL REGISTER contains documents other than rules or proposed rules that are applicable to the public. Notices of hearings and investigations, committee meetings, agency decisions and rulings, delegations of authority, filing of petitions and applications and agency statements of organization and functions are examples of documents appearing in this section.

DEPARTMENT OF AGRICULTURE

Office of the Secretary

Request for Public Comments on Administration of the Fiscal Year 2001 Tariff-Rate Quotas For Raw Cane Sugar and Certain Imported Sugars, Syrups, and Molasses

AGENCY: Foreign Agricultural Service, USDA.

ACTION: Request for public comments.

SUMMARY: This notice requests public comments on the administration of the fiscal year (FY) 2001 tariff-rate quotas (TRQs) for raw cane sugar and certain imported sugars, syrups, and molasses as provided for in Additional U.S. Note 5(a)(i) of the Harmonized Tariff Schedule of the United States (HTS).

DATES: Comments should be received on or before August 31, 2000, to be assured of consideration.

ADDRESSES: Comments should be mailed or delivered to the Director, Import Policies and Programs Division, Foreign Agricultural Service, Stop 1021, U.S. Department of Agriculture, 1400 Independence Avenue, SW, Washington, DC 20250–1021, or e-mailed to spitzer@fas.usda.gov. Comments received may be inspected between 10 a.m. and 4 p.m. at room 5531–S at the above address.

FOR FURTHER INFORMATION CONTACT: Robert Spitzer at the address above, or telephone at (202) 720–4825, or e-mail at *spitzer@fas.usda.gov.* Persons with disabilities who require this request for comment in an alternative means of communication (Braille, large print, audiotape, etc.) should contact the USDA Target Center at (202) 720–2600 (voice and TDD).

SUPPLEMENTARY INFORMATION: USDA is preparing to establish the FY 2001 TRQs for both raw cane sugar that may be entered under subheading 1701.11.10 of the HTS and certain sugars, syrups and molasses that may be entered under subheadings 1701.12.10, 1701.91.10, 1701.99.10, 1702.90.10, and 2106.90.44 of the HTS (i.e., the refined sugar TRQ).

USDA is not proposing a specific administrative approach for the raw cane or refined sugar TRQs at this time. However, interested parties may wish to consider the following factors when preparing comments: (1) In accordance with its international obligations under the World Trade Organization, USDA must establish a raw cane sugar TRQ of not less than 1,117,195 metric tons raw value and a refined sugar TRQ of not less than 22,000 metric tons raw value as provided for in Additional U.S. Note 5(a)(i) of the HTS; (2) In order for USDA to offer non-recourse support loans, the Federal Agriculture Improvement and Reform Act of 1996 requires the TRQ for imports of sugar to be established at, or increased to, a level in excess of 1,500,000 short tons raw value during the fiscal year; and (3) USDA proposes establishing the specialty sugar allocation at 14,656 metric tons, which will result in a refined sugar TRQ of at least 35,000 metric tons.

Signed at Washington, D.C., on August 4, 2000.

Timothy J. Galvin,

Administrator, Foreign Agricultural Service.

[FR Doc. 00–20337 Filed 8–9–00; 8:45 am]

BILLING CODE 3410–10–P

DEPARTMENT OF AGRICULTURE

Forest Service

Newspapers To Be Used for Publication of Legal Notice of Appealable Decisions and Publication of Notice of Proposed Actions for Eastern Region; Illinois, Indiana and Ohio, Michigan, Minnesota, Missouri, New Hampshire and Maine, Pennsylvania, Vermont and New York, West Virginia, and Wisconsin

AGENCY: Forest Service, USDA.

ACTION: Notice.

SUMMARY: Deciding Officers in the Eastern Region will publish notice of decisions subject to administrative appeal under 36 CFR parts 215 and 217 in the legal notice section of the newspapers listed in the Supplementary Information section of this notice. As provided in 36 CFR part 215.5(a) and 36 CFR 217.5(d), the public shall be advised through **Federal Register** notice, of the principal newspaper to be utilized for publishing legal notices of decisions. Newspaper publication of notice of decisions is in addition to direct notice of decisions to those who have requested notice in writing and to those known to be interested in or affected by a specific decision. In addition, the Responsible Official in the Eastern Region will also publish notice or proposed actions under 36 CFR part 215 in the newspapers that are listed in the **SUPPLEMENTARY INFORMATION** section of this notice. As provided in 36 CFR part 215(a), the public shall be advised, through **Federal Register** notice, of the principal newspapers to be utilized for publishing notices on proposed actions.

DATES: Use of these newspapers for purposes of publishing legal notice of decisions subject to appeal under 36 CFR parts 215 and 217, and notices of proposed actions under 36 CFR part 215 shall begin on or after the date of this publication.

FOR FURTHER INFORMATION CONTACT: Sharon Metzler, Regional Appeals and Litigation Coordinator, Eastern Region, Reuss Federal Plaza, 310 West Wisconsin Avenue, Milwaukee, Wisconsin 53203, Phone: 414–297–3181.

SUPPLEMENTARY INFORMATION: Deciding Officers in the Eastern Region will give legal notice of decisions subject to appeal under 36 CFR part 217 and 36 CFR part 215 in the following newspapers which are listed by Forest Service administrative unit. The timeframe for comment on a proposed action shall be based on the date of publication of the notice of the proposed action in the principal newspaper. The timeframe for appeals shall be based on the date of publication of the legal notice of the decision in the principal newspaper for both 36 CFR parts 215 and 217.

Where more than one newspaper is listed for any unit, the first newspaper listed is the principal newspaper that will be utilized for publishing the legal notices of decisions. Additional newspapers listed for a particular unit are those newspapers the Deciding Officer expects to use for purposes of providing additional notice. The timeframe for appeal shall be based on the date of publication of the legal notice of the decision in the principal newspaper. The following newspapers will be used to provide notice.

Eastern Region

Regional Forester Decisions:
Affecting National Forest System lands in the states of Illinois, Indiana and Ohio, Michigan, Minnesota, Missouri, New Hampshire and Maine, Pennsylvania, Vermont and New York; West Virginia, Wisconsin and for any decision of Region-wide Impact.
Journal/Sentinel, published daily in Milwaukee, Milwaukee County, Wisconsin

National Forests

Allegheny National Forest, Pennsylvania

Forest Supervisor Decisions:
Warren Times Observer, Warren, Warren County, Pennsylvania
District Ranger Decisions:
Bradford District: *Bradford Era,* Bradford, McKean County, Pennsylvania
Marienville District: *The Derrick,* Oil City, Pennsylvania
Ridgway District: *The Ridgway Record,* Ridgway, Elk County, Pennsylvania

Chequamegon/Nicolet National Forest, Wisconsin

Forest Supervisor Decisions:
The Journal/Sentinel, published daily in Milwaukee, Milwaukee County, Wisconsin
District Ranger Decisions:
Eagle River/Florence District: *The Daily News,* published daily except Saturday, Rhinelander, Wisconsin
Great Divide District: *The Glidden Enterprise,* published weekly in Glidden, Ashland County, Wisconsin and *The Sawyer County Record,* published weekly in Hayward, Sawyer County, Wisconsin
Medford/Park Falls District: *The Star News* published weekly in Medford, Taylor County, Wisconsin and *The Park Falls Herald,* published weekly in Park Falls, Price County, Wisconsin
Washburn District: *The Daily Press,* published daily in Ashland County, Ashland, Wisconsin
Lakewood/Laona District: *The Daily News,* published daily except Saturday, Rhinelander, Wisconsin

Chippewa National Forest, Minnesota

Forest Supervisor Decisions:
Bemidji Pioneer, published daily in Bemidji, Beltrami County, Minnesota
District Ranger Decisions:
Blackduck District: *The American,* published weekly in Blackduck, Beltrami County, Minnesota
Cass Lake District: *The Cass Lake Times,* published weekly in Cass Lake, Cass County, Minnesota
Deer River and Marcell Districts: *The Western Itasca Review,* published weekly in Deer River, Itasca County, Minnesota
Walker District: *The Pilot/Independent,* published weekly in Walker, Cass County, Minnesota

Green Mountain National Forest, Vermont

Forest Supervisor Decisions:
The Rutland Herald, published daily in Rutland, Rutland County, Vermont

Finger Lakes National Forest, New York

Forest Supervisor Decisions:
The Ithaca Journal, published daily in Ithaca, Tompkins County, New York
District Ranger Decisions:
Manchester District: *The Bennington Banner,* published daily in Bennington, Bennington County, Vermont; *Manchester Journal,* published weekly in Bennington County, *Vermont* and the Brattleboro Reformer, published daily in Brattleboro, Windham County, Vermont
Middlebury District: *The Addison County Independent,* published twice a week in Middlebury, Addison County, Vermont.
Rochester District: *The Burlington Free Press,* published daily in Burlington, Chittenden County, Vermont; *The Valley Reporter,* published weekly in Washington County, Vermont and *Randolph Herald,* published daily in Windsor County, Vermont

Hiawatha National Forest, Michigan

Forest Supervisor Decisions:
The Escanaba Daily Press, published daily in Escanaba, Delta County, Michigan
District Ranger Decisions:
Rapid River District: *The Daily Press,* published daily in Escanaba, Delta County, Michigan
Manistique District: *The Daily Press,* published daily in Escanaba, Delta County, Michigan
Munising District: *The Mining Journal,* published daily in Marquette, Marquette County, Michigan
Sault Ste. Marie District: *The Evening News,* published daily in Leesburg, FL
St. Ignace District: *The Evening News,* published daily in Sault Ste. Marie, Chippewa County, Michigan

Hoosier National Forest, Indiana

Forest Supervisor Decisions:
The Sunday Herald Times, published in Bloomington, Monroe County, Indiana
District Ranger Decisions:
Brownstown District: *The Sunday Herald Times,* published in Bloomington, Monroe County, Indiana
Tell City District: *The Perry County News,* published in Tell City, Perry County, Indiana

Huron-Manistee National Forest, Michigan

Note: 1st Newspaper Listed is Mandatory—Others Optional

Forest Supervisor Decisions:
Cadillac Evening News, published daily in Cadillac, Wexford County, Michigan; *Lake County Star,* published weekly in Baldwin, Lake County, Michigan; *Ludington Daily News,* published daily in Ludington, Mason County, Michigan; *Alcona County Review,* published weekly in Harrisville, Alcona County, Michigan; *Manistee News Advocate,* published daily in Manistee, Manistee County, Michigan; *Oscoda County Herald,* published weekly in Mio, Oscoda County, Michigan; *Crawford County Avalanche,* published weekly in Grayling, Crawford County, Michigan; *Oscoda Press,* published weekly in Oscoda, Iosoco County, Michigan; *Fremont Times-Indicator,* published weekly in Fremont, Newaygo County, Michigan; *Oceana-Herald Journal,* published daily in Hart, Mason County, Michigan; *Muskegon Chronicle,* published in Muskegon, Muskegon County, Michigan; *Grand Rapids Press,* published daily in Grand Rapids, Kent County, Michigan and *Big Rapids Pioneer,* published daily in Big Rapids, Mecosta County, Michigan
District Ranger Decisions:
Baldwin District: *Lake County Star,* published weekly in Baldwin, Lake County, Michigan and *Ludington Daily News,* published daily in Ludington, Mason County, Michigan
Cadillac District: *Cadillac Evening News,* published daily in Cadillac, Wexford County, Michigan; *Manistee News Advocate,* published daily in Manistee, Manistee County, Michigan and *Lake County Star,* published weekly in Baldwin, Lake County, Michigan

Harrisville District: *Alcona County Review,* published weekly in Harrisville, Alcona County, Michigan
Manistee District: *Manistee News Advocate,* published daily in Manistee, Manistee County, Michigan
Mio District: *Oscoda County Herald,* published weekly in Mio, Oscoda County, Michigan and *Crawford County Avalanche,* published weekly in Grayling, Crawford County, Michigan
Tawas District: *Oscoda Press,* published weekly in Oscoda, Iosco County, Michigan
White Cloud District: *Fremont Times-Indicator,* published weekly in Fremont, Newaygo County, Michigan and *Oceana-Herald Journal,* published daily in Hart, Mason County, Michigan

Mark Twain National Forest, Missouri

Forest Supervisor Decisions:
Rolla Daily News, published in Rolla, Phelps County, Missouri
District Ranger Decisions:
Ava/Cassville District: *Springfield News Leader,* published daily in Springfield, Greene County, Missouri
Cedar Creek District: *Fulton Sun,* published daily in Fulton, Callaway County, Missouri
Doniphan District: *Prospect News,* published weekly in Doniphan, Ripley County, Missouri
Eleven Point District: *Current Wave*, published weekly in Eminence, Shannon County, Missouri
Rolla District: *Houston Herald*, published weekly (Thursdays) in Houston, Texas County, Missouri.
Houston District: *Houston Herald*, published weekly (Thursdays) in Houston, Texas County, Missouri
Popular Bluff District: *Daily American Republic*, published daily in Popular Bluff, Butler County, Missouri
Potosi District: *The Independent-Journal*, published Thursday in Potosi, Washington County, Missouri
Fredericktown District: *The Democrat-News*, published weekly in Eminence, Shannon County, Missouri
Salem District: *The Salem News*, published Tuesday and Thursday in Salem, Dent County, Missouri
Willow Springs District: *West Plains Daily Quill*, published daily in West Plains, Howell County, Missouri

Monongahela National Forest, Elkins, West Virginia

Forest Supervisor Decisions:
The Elkins Intermountain, published daily in Elkins, Randolph County, W.V.
District Ranger Decisions:
Cheat District: *The Parsons Advocate*, published weekly in Parsons, Tucker County, W.V.
Gauley District: *The Chronicle*, published weekly in Summersville, Nicholas County, W.V.
Greenbrier District: *The Pocahontas Times*, published weekly in Marlinton, Pocahontas County, W.V.
Marlinton District: *The Pocahontas Times*, published weekly in Marlinton, Pocahontas County, W.V.
Potomac District: *The Grant County Press*, published weekly in Petersburg, Grant County, W.V.
White Sulphur District: *The Register-Herald*, published daily in Beckley, Raleigh County, W.V.

Ottawa National Forest, Michigan

Forest Supervisor Decisions:
The Ironwood Daily Globe, published in Ironwood, Gogebic County, Michigan and for those in the Iron River District, *The Reporter*, published in Iron River, Iron County, Michigan
District Ranger Decisions:
Bessemer, Kenton, Ontonagon and Watersmeet Districts: *The Ironwood Daily Globe*, published in Ironwood, Gogebic County, Michigan
Iron River District: *The Reporter*, published in Iron River, Iron County, Michigan

Shawnee National Forest, Illinois

Forest Supervisor Decisions:
Southern Illinoisian, published daily in Carbondale, Jackson County, Illinois
District Ranger Decisions:
Elizabethtown, Jonesboro, Murphysboro and Vienna Districts: *Southern Illinoisian*, published daily in Carbondale, Jackson County, Illinois

Superior National Forest, Minnesota

Forest Supervisor Decisions:
Duluth News-Tribune, published daily in Duluth, St. Louis County, Minnesota
District Ranger Decisions:
Gunflint District: *Cook County News-Herald*, published weekly in Grand Marias, Cook County, Minnesota
Kawishiwi District: *Ely Echo*, published weekly in Ely, St. Louis County, Minnesota
LaCroix District: *Mesabi Daily News*, published daily in Virginia, St. Louis County, Minnesota
Laurentian District: *Mesabi Daily News,* published daily in Virginia, St. Louis County, Minnesota and Lake County News-Chronicle, published weekly in Two Harbors, Lake County, Minnesota
Tofte District: *Duluth News-Tribune*, published daily in Duluth, St. Louis County, Minnesota

Wayne National Forest, Ohio

Forest Supervisor Decisions:
The Athens Messenger, published in Athens, Athens County, Ohio
District Ranger Decisions:
Athens District: *Athens Messenger*, (same for Marietta Unit), published in Athens, Athens County, Ohio
Ironton District: *The Ironton Tribune*, published in Ironton, Lawrence County, Ohio

White Mountain National Forest, New Hampshire and Maine

Forest Supervisor Decisions:
The Union Leader, published daily in Manchester, County of Hillsborough, New Hampshire
Ammonoosuc District: *The Union Leader*, published daily in Manchester, County of Hillsborough, New Hampshire
Androscoggin District: *The Union Leader*, published daily in Manchester, County of Hillsborough, New Hampshire
Evans Notch District: *The Lewiston Sun*, published daily in Lewiston, County of Androscoggin, Maine
Pemigewasset District: *The Union Leader*, published daily in Manchester, County of Hillsborough, New Hampshire
Saco District: *The Union Leader*, published daily in Manchester, County of Hillsborough, New Hampshire

Dated: August 4, 2000.

Robert T. Jacobs,

Regional Forester.

[FR Doc. 00–20225 Filed 8–9–00; 8:45 am]

BILLING CODE 3410–11–M

DEPARTMENT OF AGRICULTURE

Forest Service

John Day/Snake Resource Advisory Council, Hells Canyon Subgroup

AGENCY: Forest Service, USDA.

ACTION: Notice of meeting.

SUMMARY: The Hells Canyon Subgroup of the John Day/Snake Resource Advisory Council will meet on September 8–10, 2000 at the Forest

Service Administrative Site, Pittsburgh Landing. The meeting will begin at 9 a.m. and continue until 5 p.m. the first day and will begin at 8 a.m. on the second and third days and adjourn by 2 p.m. the final day. Agenda items to be covered include: (1) Hands on education of Heritage site, (2) Clean-up and/or site restoration of Recreation and/or Heritage sites, (3) Update on the Comprehensive Management Plan EIS, and (4) Open public forum. All meetings are open to the public. Public comments will be received September 9, 2000 at 8 a.m. at the Pittsburgh Administrative Site.

FOR FURTHER INFORMATION CONTACT: Direct questions regarding this meeting to Kendall Clark, Area Ranger, USDA, Hells Canyon National Recreation Area, 88401 Highway 82, Enterprise, OR 97828, 541–426–5501.

Dated: August 4, 2000.

John C. Schuyler,

Deputy Forest Supervisor.

[FR Doc. 00–20238 Filed 8–9–00; 8:45 am]

BILLING CODE 3410–11–M

DEPARTMENT OF COMMERCE

[I.D. 080700B]

Submission for OMB Review; Comment Request

The Department of Commerce has submitted to the Office of Management and Budget (OMB) for clearance the following proposal for collection of information under the provisions of the Paperwork Reduction Act (44 U.S.C. Chapter 35).

Agency: National Oceanic and Atmospheric Administration (NOAA).

Title: Alaska Region Permit Family of Forms.

Form Number(s): None.

OMB Approval Number: 0648–0206.

Type of Request: Regular.

Burden Hours: 483.

Number of Respondents: 931.

Average Hours Per Response: 20 minutes for a vessel or processor permit application, 20 hours for an application for an exempted fishing permit, 10 hours for an exempted fishing permit final report, and 5 hours for an exempted fishing permit progress report.

Needs and Uses: Fishermen and processors wishing to participate in regulated fisheries in the Exclusive Economic Zone off Alaska must obtain either a Federal Fisheries Permit, a Federal Processor Permit, a High Seas Power Troller Permit, or an Experimental Fishing Permit. The application information is used to identify participants in the fishery, aid enforcement of fishery regulations, and analyze activity within the fisheries.

Affected Public: Business and other for-profit organizations.

Frequency: Triennial for vessel and processor permits, on occasion for exempted fishing permit requirements.

Respondent's Obligation: Mandatory.

OMB Desk Officer: David Rostker, (202) 395–3897.

Copies of the above information collection proposal can be obtained by calling or writing Linda Engelmeier, DOC Forms Clearance Officer, (202) 482–3272, Department of Commerce, Room 6086, 14th and Constitution Avenue, NW, Washington, DC 20230 (or via the Internet at lengelme@doc.gov).

Written comments and recommendations for the proposed information collection should be sent within 30 days of publication of this notice to David Rostker, OMB Desk Officer, Room 10202, New Executive Office Building, Washington, DC 20503.

Dated: August 3, 2000.

Madeleine Clayton,

Management Analyst, Office of the Chief Information Officer.

[FR Doc. 00–20322 Filed 8–9–00; 8:45 am]

BILLING CODE 3510–22–F

DEPARTMENT OF COMMERCE

[I.D. 080700A]

Submission for OMB Review; Proposed Information Collection; Comment Request

The Department of Commerce has submitted to the Office of Management and Budget (OMB) for the following proposal for collection of information under the provisions of the Paperwork Reduction Act (44 U.S.C. Chapter 35).

Agency: National Oceanic and Atmospheric Administration (NOAA).

Title: Southwest Region Permit Family of Forms.

Form Number(s): None.

OMB Approval Number: 0648–0204.

Type of Request: Regular submission.

Burden Hours: 245.

Number of Respondents: 364.

Average Hours Per Response: 30 minutes for a permit application for the Pacific pelagic, crustacean, precious coral, and coastal pelagic fisheries; 1 hour for a permit application for the bottomfish and seamount groundfish fisheries; 2 hours for an exempted fishery application; 2 hours for an appeal of Pacific pelagic permit action or a bottomfish and seamount groundfish permit action; and 1 hour for additional permit application information in the coastal pelagics fishery.

Needs and Uses: Permits are required for persons to participate in Federally-managed fisheries in the western Pacific region and off the West Coast. The permit application forms provide basic information about permit holders and the vessels and gear being used. This information is important for understanding the nature of the fisheries and provides a link to participants. It also aids in the enforcement of regulations.

Affected Public: Business and other for-profit organizations, and individuals.

Frequency: On occasion, annual, biennial.

Respondent's Obligation: Required to obtain or retain a benefit.

OMB Desk Officer: David Rostker, (202) 395–3897.

Copies of the above information collection proposal can be obtained by calling or writing Linda Engelmeier, DOC Forms Clearance Officer, (202) 482–3272, Department of Commerce, Room 6086, 14th and Constitution Avenue, NW, Washington, DC 20230 (or via the Internet at lengelme@doc.gov).

Written comments and recommendations for the proposed information collection should be sent within 30 days of publication of this notice to David Rostker, OMB Desk Officer, Room 10202, New Executive Office Building, Washington, DC 20503.

Dated: August 3, 2000.

Madeleine Clayton,

Management Analyst, Office of the Chief Information Officer.

[FR Doc. 00–20323 Filed 8–9–00; 8:45 am]

BILLING CODE 3510–22–F

DEPARTMENT OF COMMERCE

International Trade Administration

[A–570–827]

Continuation of Antidumping Duty Order: Cased Pencils From the People's Republic of China

AGENCY: Import Administration, International Trade Administration, Department of Commerce.

ACTION: Notice of Continuation of Antidumping Duty Order: Cased Pencils from the People's Republic of China (''PRC'').

SUMMARY: On July 5, 2000, the Department of Commerce (''the Department''), pursuant to sections 751(c) and 752 of the Tariff Act of 1930, as amended (''the Act''), determined

that revocation of the antidumping duty order on cased pencils from the PRC, is likely to lead to continuation or recurrence of dumping. *See Certain Cased Pencils from the People's Republic of China; Final Results of Expedited Sunset Review of Antidumping Order,* 65 FR 41431 (July 5, 2000). On July 28, 2000, the International Trade Commission (''the Commission''), pursuant to section 751(c) of the Act, determined that revocation of the antidumping duty order on cased pencils from the PRC would be likely to lead to continuation or recurrence of material injury to an industry in the United States within a reasonably foreseeable time. *See Cased Pencils from China,* 65 FR 45998 (July 26, 2000). Therefore, pursuant to 19 CFR 351.218(f)(4), the Department is publishing notice of the continuation of the antidumping duty order on cased pencils from the PRC.

EFFECTIVE DATE: August 10, 2000.

FOR FURTHER INFORMATION CONTACT: Kathryn B. McCormick or James P. Maeder, Office of Policy for Import Administration, International Trade Administration, U.S. Department of Commerce, 14th Street and Constitution Ave., NW, Washington, D.C. 20230; telephone: (202) 482–1930 or (202) 482–3330, respectively.

SUPPLEMENTARY INFORMATION:

Background:

On December 1, 1999, the Department initiated, and the Commission instituted, sunset reviews (64 FR 67247 and 64 FR 67304, respectively) of the antidumping duty order on cased pencils from the PRC, pursuant to section 751(c) of the Act. As a result of its review, the Department found on July 5, 2000 that revocation of the antidumping duty order on cased pencils from the PRC would likely lead to continuation or recurrence of dumping and notified the Commission of the magnitude of the margins likely to prevail were the order revoked. *See Certain Cased Pencils from the People's Republic of China; Final Results of Expedited Sunset Review of Antidumping Order,* 65 FR 41431 (July 5, 2000).

On July 5, 2000, the Commission determined, pursuant to section 751(c) of the Act, that revocation of the antidumping duty order on cased pencils from the PRC would be likely to lead to continuation or recurrence of material injury to an industry in the United States within a reasonably foreseeable time. *See Cased Pencils from China,* 65 FR 45998 (July 26, 2000) and USITC Publication 3328 (July 2000), Investigation No. 731–TA–669 (Review).

Scope:

The products covered by this order are certain cased pencils of any shape or dimension which are writing and/or drawing instruments that feature cores of graphite or other materials, encased in wood and/or man-made materials, whether or not decorated and whether or not tipped (e.g., with erasers, etc.) in any fashion, and either sharpened or unsharpened. The pencils subject to this order are classified under subheading 9609.10.00 of the Harmonized Tariff Schedules of the United States (''HTSUS'').

Specifically excluded from the scope of this order are mechanical pencils, cosmetic pencils, pens, non-cased crayons (wax), pastels, charcoals, and chalks. [1] Although the HTSUS subheadings are provided for convenience and customs purposes, the written description is dispositive.

Determination:

As a result of the determinations by the Department and the Commission that revocation of the antidumping duty order would be likely to lead to continuation or recurrence of dumping and material injury to an industry in the United States, pursuant to section 751(d)(2) of the Act, the Department hereby orders the continuation of the antidumping duty order on cased pencils from the PRC. The Department will instruct the U.S. Customs Service to continue to collect antidumping duty deposits at the rates in effect at the time of entry for all imports of subject merchandise. The effective date of continuation of this order will be the date of publication in the **Federal Register** of this Notice of Continuation. Pursuant to section 751(c)(2) and 751(c)(6) of the Act, the Department intends to initiate the next five-year review of this order not later than July 2005.

Dated: August 4, 2000.

Troy H. Cribb,

Acting Assistant Secretary for Import Administration.

[FR Doc. 00–20329 Filed 8–9–00; 8:45 am]

BILLING CODE 3510–DS–P

[1] *See Notice of Scope Rulings,* 62 FR 62288 (November 21, 1997) (the Department determined that a plastic, quasi-mechanical pencil known as the Bensia pencil is outside the scope of the order); and *Notice of Scope Rulings,* 63 FR 29700 (June 1, 1998) (Naturally Pretty, a young girl's 10 piece dress-up vanity set, including two 3-inch pencils, is outside the scope of the order).

DEPARTMENT OF COMMERCE

International Trade Administration

[A–580–812]

Dynamic Random Access Memory Semiconductors of One Megabit or Above (DRAMs) From the Republic of Korea: Extension of Time Limit for Final Results of Antidumping Duty Administrative Review

AGENCY: Import Administration, International Trade Administration, Department of Commerce.

EFFECTIVE DATE: August 10, 2000.

FOR FURTHER INFORMATION CONTACT: John Conniff at (202) 482–1009, Office of AD/CVD Enforcement, Group II, Office 4, Import Administration, International Trade Administration, U.S. Department of Commerce, 14th Street and Constitution Ave, NW, Washington, DC 20230.

Information:

Statutory Time Limits

Section 751(a)(3)(A) of the Tariff Act of 1930, as amended (the Act), requires the Department of Commerce (the Department) to make a preliminary determination within 245 days after the last day of the anniversary month of an order/finding for which a review is requested and a final determination within 120 days after the date on which the preliminary determination is published. However, if it is not practicable to complete the review within the time period, section 751(a)(3)(A) of the Act allows the Department to extend the time limit for the preliminary determination to a maximum of 365 days and for the final determination to 180 days (or 300 days if the Department does not extend the time limit for the preliminary determination) from the date of publication of the preliminary determination.

Background

On June 30, 1999, the Department published a notice of initiation of administrative review of the antidumping duty order on DRAMs from the Republic of Korea, covering the period May 1, 1998 through April 30, 1999, (64 FR 35124). On June 6, 2000, (65 FR 35886), we published the preliminary results of review. In our notice of preliminary results, we stated our intention to issue the final results of this review no later than October 4, 2000.

Extension of Final Results of Review

We determine that it is not practicable to complete the final results of this

review within the original time limit. Therefore we are extending the time limits for completion of the final results until no later than November 3, 2000. *See* Decision Memorandum from Thomas F. Futtner to Holly A. Kuga, dated concurrently with this notice, which is on file in the Central Records Unit, Room B–099 of the main Commerce Building.

This extension is in accordance with section 751(a)(3)(A) of the Act.

Dated: July 28, 2000.

Holly A. Kuga,

Acting Deputy Assistant Secretary for Import Administration.

[FR Doc. 00–20192 Filed 8–9–00; 8:45 am]

BILLING CODE 3510–DS–P

DEPARTMENT OF COMMERCE

International Trade Administration

[A–570–803]

Continuation of Antidumping Duty Order: Bars, Wedges, Axes, Adzes, Picks, and Mattocks (Heavy Forged Handtools) From the People's Republic of China

AGENCY: Import Administration, International Trade Administration, Department of Commerce.

ACTION: Notice of Continuation of Antidumping Duty Order: Bars, Wedges, Axes, Adzes, Picks, and Mattocks (Heavy Forged Handtools) from the People's Republic of China.

SUMMARY: On February 4, 2000, and on June 2, 2000, the Department of Commerce (''the Department''), pursuant to sections 751(c) and 752 of the Tariff Act of 1930, as amended (''the Act''), determined that revocation of the antidumping duty order on bars, wedges, axes, adzes, picks, mattocks, hammers, and sledges (collectively, ''heavy forged handtools'') from the PRC, is likely to lead to continuation or recurrence of dumping.[1] On July 26, 2000, the International Trade Commission (''the Commission''), pursuant to section 751(c) of the Act, determined that revocation of the antidumping duty order on heavy forged handtools from the PRC would be likely to lead to continuation or recurrence of material injury to an industry in the United States within a reasonably foreseeable time. *See* 65 FR 45998 (July 26, 2000). Therefore, pursuant to 19 CFR 351.218(f)(4), the Department is publishing notice of the continuation of the antidumping duty order on heavy forged handtools from the PRC.

EFFECTIVE DATE: August 10, 2000.

FOR FURTHER INFORMATION CONTACT: Martha V. Douthit or James P. Maeder, Office of Policy for Import Administration, International Trade Administration, U.S. Department of Commerce, 14th Street and Constitution Ave., NW, Washington, DC 20230; telephone: (202) 482–5050 or (202) 482–3330, respectively.

SUPPLEMENTARY INFORMATION:

Background

On July 1, 1999, the Department initiated, and the Commission instituted, sunset reviews (64 FR 35588 and 64 FR 35687, respectively) of the antidumping duty order on bars, wedges, axes, adzes, picks, mattocks, hammers, and sledges (heavy forged handtools) from the PRC, pursuant to section 751(c) of the Act. As a result of its review, the Department found on February 4, 2000, that revocation of the antidumping duty order on axes, adzes, picks, and mattocks from the PRC would likely lead to continuation or recurrence of dumping and notified the Commission of the magnitude of the margins likely to prevail were the order revoked. *See* 65 FR 5497 (February 4, 2000). In addition, under the same order (A–570–803), on June 2, 2000, the Department determined that revocation of the antidumping duty order on bars, wedges, hammers, and sledges from the PRC would likely lead to continuation or recurrence of dumping and notified the Commission of the magnitude of the margins likely to prevail were the order revoked. *See* 65 FR 35321 (June 2, 2000).

On February 26, 2000, the Commission determined, pursuant to section 751(c) of the Act, that revocation of the antidumping duty order on heavy forged handtools from the PRC would be likely to lead to continuation or recurrence of material injury to an industry in the United States within a reasonably foreseeable time. *See Heavy Forged Handtools From China*, 65 FR 45998 (July 26, 2000) and USITC Publication 3322 (July 2000), Investigation No. 731–TA–457 A–D (Review).

Scope

Imports covered by this order are shipments of heavy forged handtools (''HFHTs'') from the PRC comprising the following classes or kinds of merchandise: (1) Hammers and sledges with heads over 1.5 kg (3.33 pounds) (hammers/sledges); (2) bars over 18 inches in length, track tools and wedges (bars/wedges); (3) picks/mattocks; and (4) axes/adzes. HFHTs include heads for drilling, hammers, sledges, axes, mauls, picks, and mattocks, which may or may not be painted, which may or may not be finished, or which may or may not be imported with handles; assorted bar products and track tools including wrecking bars, digging bars and tampers; and steel wood splitting wedges. HFHTs are manufactured through a hot forge operation in which steel is sheared to required length, heated to forging temperature, and formed to final shape on forging equipment using dies specific to the desired product shape and size. Depending on the product, finishing operations may include shot-blasting, grinding, polishing and painting, and the insertion of handles for handled products. HFHTs are currently classifiable under the following Harmonized Tariff Schedule (''HTS'') subheadings: 8205.20.60, 8205.59.30, 8201.30.00, and 8201.40.60. Specifically excluded are hammers and sledges with heads 1.5 kg (3.33 pounds) in weight and under, hoes and rakes, and bars 18 inches in length and under.

The HTS item numbers are provided for convenience and customs purposes only. The written description of the scope remains dispositive.

This order covers imports from all manufacturers and exporters of axes, adzes, picks, mattocks, bars, wedges, hammers, and sledges from the PRC.

Determination

As a result of the determination by the Department and the Commission that revocation of the antidumping duty order would be likely to lead to continuation or recurrence of dumping and material injury to an industry in the United States, pursuant to section 751(d)(2) of the Act, the Department hereby orders the continuation of the antidumping duty order on heavy forged handtools from the PRC. The Department will instruct the U.S. Customs Service to continue to collect antidumping duty deposits at the rates in effect at the time of entry for all imports of subject merchandise. The effective date of continuation of this order will be the date of publication in the **Federal Register** of this Notice of Continuation. Pursuant to section 751(c)(2) and 751(c)(6) of the Act, the Department intends to initiate the next five-year review of this order not later than July 2005.

---

[1] *See Final Results of Expedited Sunset Reviews: Axes and Adzes and Picks and Mattocks From the People's Republic of China*; 65 FR 5497 (February 4, 2000), and *Final Results of Full Sunset Reviews: Bars and Wedges and Hammers and Sledges From the People's Republic of China*; 65 FR 35321 (June 2, 2000).

Dated: August 3, 2000.

Richard W. Moreland,

Acting Assistant Secretary for Import Administration.

[FR Doc. 00–20191 Filed 8–9–00; 8:45 am]

BILLING CODE 3510–DS–P

DEPARTMENT OF COMMERCE

International Trade Administration

[A–588–835]

Oil Country Tubular Goods From Japan: Notice of Extension of Preliminary Results of Antidumping Duty Administrative Review

AGENCY: Import Administration, International Trade Administration, Department of Commerce.

ACTION: Notice of extension of time limits for preliminary results of antidumping duty administrative review.

EFFECTIVE DATE: August 10, 2000.

FOR FURTHER INFORMATION CONTACT: Thomas Gilgunn, Import Administration, International Trade Administration, U.S. Department of Commerce, 14th Street and Constitution Avenue, NW, Washington, DC 20230; telephone: (202) 482–0648.

The Applicable Statute

Unless otherwise indicated, all citations to the Tariff Act of 1930, as amended (the Act) are to the provisions effective January 1, 1995, the effective date of the amendments made to the Act by the Uruguay Round Agreements Act. In addition, unless otherwise indicated, all citations to the Department's regulations are to 19 CFR part 351 (1998).

Extension of Time Limits for Preliminary Results

The Department of Commerce has received a request to conduct an administrative review of the antidumping duty order on oil country tubular goods from Japan. The Department initiated this antidumping administrative review for Sumitomo Metal Industries, Hallmark Tubulars Ltd., Itochu Corporation, Itochu Project Management Corporation, and Nippon Steel Corporation on October 1, 1999 (64 FR 53318). The review covers the period August 1, 1998 through July 31, 1999.

Because of the extraordinary complexity of certain issues, it is not practicable to complete these reviews within the time limits mandated by section 751(a)(3)(A) of the Act. Therefore, in accordance with that section, the Department is extending the time limits for the preliminary results to August 30, 2000 (*See* Memorandum from Edward C. Yang to Joseph A. Spetrini, ''Extension of Time Limit for the Preliminary Results of the Antidumping Duty Administrative Review of Oil Country Tubular Goods (OCTG).'' This extension of time limits is in accordance with section 751(a)(3)(A) of the Act.

Dated: August 3, 2000.

Richard O. Weible,

Acting Deputy Assistant Secretary for AD/CVD Enforcement III.

[FR Doc. 00–20331 Filed 8–9–00; 8:45 am]

BILLING CODE 3510–DS–P

DEPARTMENT OF COMMERCE

International Trade Administration

[A–485–805]

Notice of Amended Final Determination of Sales at Less Than Fair Value and Antidumping Duty Order: Certain Small Diameter Carbon and Alloy Seamless Standard, Line and Pressure Pipe From Romania

AGENCY: Import Administration, International Trade Administration, Department of Commerce.

EFFECTIVE DATE: August 10, 2000.

FOR FURTHER INFORMATION CONTACT: Magd Zalok or Charles Riggle, Group II, Office 5, Import Administration, International Trade Administration, U.S. Department of Commerce, 14th Street and Constitution Avenue, NW, Washington, DC 20230; telephone: (202) 482–4162, (202) 482–0650, respectively.

The Applicable Statute and Regulations

Unless otherwise indicated, all citations to the statute are references to the provisions effective January 1, 1995, the effective date of the amendments made to the Tariff Act of 1930 (the Act) by the Uruguay Round Agreements Act (URAA). In addition, unless otherwise indicated, all citations to the Department of Commerce (the Department) regulations refer to the regulations codified at 19 CFR part 351 (April 1999).

Scope of Order

The products covered by this order are seamless carbon and alloy (other than stainless) steel standard, line, and pressure pipes and redraw hollows produced, or equivalent, to the ASTM A–53, ASTM A–106, ASTM A–333, ASTM A–334, ASTM A–335, ASTM A–589, ASTM A–795, and the API 5L specifications and meeting the physical parameters described below, regardless of application. The scope of this order also includes all products used in standard, line, or pressure pipe applications and meeting the physical parameters described below, regardless of specification. Specifically included within the scope of this order is seamless pipes and redraw hollows, less than or equal to 4.5 inches (114.3 mm) in outside diameter, regardless of wall-thickness, manufacturing process (hot finished or cold-drawn), end finish (plain end, beveled end, upset end, threaded, or threaded and coupled), or surface finish.

The seamless pipes subject to this order is currently classifiable under the subheadings 7304.10.10.20, 7304.10.50.20, 7304.31.30.00, 7304.31.60.50, 7304.39.00.16, 7304.39.00.20, 7304.39.00.24, 7304.39.00.28, 7304.39.00.32, 7304.51.50.05, 7304.51.50.60, 7304.59.60.00, 7304.59.80.10, 7304.59.80.15, 7304.59.80.20, and 7304.59.80.25 of the HTSUS.

Specifications, Characteristics, and Uses: Seamless pressure pipes are intended for the conveyance of water, steam, petrochemicals, chemicals, oil products, natural gas and other liquids and gasses in industrial piping systems. They may carry these substances at elevated pressures and temperatures and may be subject to the application of external heat. Seamless carbon steel pressure pipe meeting the ASTM A–106 standard may be used in temperatures of up to 1000 degrees Fahrenheit, at various ASME code stress levels. Alloy pipes made to ASTM A–335 standard must be used if temperatures and stress levels exceed those allowed for ASTM A–106. Seamless pressure pipes sold in the United States are commonly produced to the ASTM A–106 standard.

Seamless standard pipes are most commonly produced to the ASTM A–53 specification and generally are not intended for high temperature service. They are intended for the low temperature and pressure conveyance of water, steam, natural gas, air and other liquids and gasses in plumbing and heating systems, air conditioning units, automatic sprinkler systems, and other related uses. Standard pipes (depending on type and code) may carry liquids at elevated temperatures but must not exceed relevant ASME code requirements. If exceptionally low temperature uses or conditions are anticipated, standard pipe may be manufactured to ASTM A–333 or ASTM A–334 specifications.

Seamless line pipes are intended for the conveyance of oil and natural gas or other fluids in pipe lines. Seamless line

pipes are produced to the API 5L specification.

Seamless water well pipe (ASTM A–589) and seamless galvanized pipe for fire protection uses (ASTM A–795) are used for the conveyance of water.

Seamless pipes are commonly produced and certified to meet ASTM A–106, ASTM A–53, API 5L–B, and API 5L–X42 specifications. To avoid maintaining separate production runs and separate inventories, manufacturers typically triple or quadruple certify the pipes by meeting the metallurgical requirements and performing the required tests pursuant to the respective specifications. Since distributors sell the vast majority of this product, they can thereby maintain a single inventory to service all customers.

The primary application of ASTM A–106 pressure pipes and triple or quadruple certified pipes is in pressure piping systems by refineries, petrochemical plants, and chemical plants. Other applications are in power generation plants (electrical-fossil fuel or nuclear), and in some oil field uses (on shore and off shore) such as for separator lines, gathering lines and metering runs. A minor application of this product is for use as oil and gas distribution lines for commercial applications. These applications constitute the majority of the market for the subject seamless pipes. However, ASTM A–106 pipes may be used in some boiler applications.

Redraw hollows are any unfinished pipe or ''hollow profiles'' of carbon or alloy steel transformed by hot rolling or cold drawing/hydrostatic testing or other methods to enable the material to be sold under ASTM A–53, ASTM A–106, ASTM A–333, ASTM A–334, ASTM A–335, ASTM A–589, ASTM A–795, and API 5L specifications.

The scope of this order includes all seamless pipe meeting the physical parameters described above and produced to one of the specifications listed above, regardless of application, with the exception of the specific exclusions discussed below, and whether or not also certified to a non-covered specification. Standard, line, and pressure applications and the above-listed specifications are defining characteristics of the scope of this order. Therefore, seamless pipes meeting the physical description above, but not produced to the ASTM A–53, ASTM A–106, ASTM A–333, ASTM A–334, ASTM A–335, ASTM A–589, ASTM A–795, and API 5L specifications shall be covered if used in a standard, line, or pressure application, with the exception of the specific exclusions discussed below.

For example, there are certain other ASTM specifications of pipe which, because of overlapping characteristics, could potentially be used in ASTM A–106 applications. These specifications generally include ASTM A–161, ASTM A–192, ASTM A–210, ASTM A–252, ASTM A–501, ASTM A–523, ASTM A–524, and ASTM A–618. When such pipes are used in a standard, line, or pressure pipe application, with the exception of the specific exclusions discussed below, such products are covered by the scope of this order.

Specifically excluded from the scope of this order is boiler tubing and mechanical tubing, if such products are not produced to ASTM A–53, ASTM A–106, ASTM A–333, ASTM A–334, ASTM A–335, ASTM A–589, ASTM A–795, and API 5L specifications and are not used in standard, line, or pressure pipe applications. In addition, finished and unfinished OCTG are excluded from the scope of this order, if covered by the scope of another antidumping duty order from the same country. If not covered by such an OCTG order, finished and unfinished OCTG are included in this scope when used in standard, line or pressure applications.

With regard to the excluded products listed above, the Department will not instruct Customs to require end-use certification until such time as petitioner or other interested parties provide to the Department a reasonable basis to believe or suspect that the products are being used in a covered application. If such information is provided, we will require end-use certification only for the product(s) (or specification(s)) for which evidence is provided that such products are being used in covered applications as described above. For example, if, based on evidence provided by petitioner, the Department finds a reasonable basis to believe or suspect that seamless pipe produced to the A–161 specification is being used in a standard, line or pressure application, we will require end-use certifications for imports of that specification. Normally we will require only the importer of record to certify to the end use of the imported merchandise. If it later proves necessary for adequate implementation, we may also require producers who export such products to the United States to provide such certification on invoices accompanying shipments to the United States.

Although the HTSUS subheadings are provided for convenience and customs purposes, our written description of the merchandise subject to this scope is dispositive.

Amended Final Determination

In accordance with section 735(a) of the Act, on June 23, 2000, the Department published its affirmative final determination of the antidumping duty investigation of certain small diameter carbon and alloy seamless standard, line and pressure pipe from Romania (*Final Determination of Sales at Less Than Fair Value: Certain Small Diameter Carbon and Alloy Seamless Standard, Line and Pressure Pipe from Romania,* 65 FR 39125). On June 29, 2000, we received ministerial error allegations, timely filed pursuant to section 351.224(c)(2) of the Department's regulations, from the petitioners [1] and the respondents [2] regarding the Department's final margin calculations. On July 5, 2000, we received rebuttal comments from both parties.

The petitioners allege that the Department should recalculate the surrogate profit ratio by adding back to profit an amount equal to the foreign exchange losses excluded from the Department's calculation of general and administrative expenses. The respondents argue that the Department erroneously valued lacquer using U.S. dollars instead of German Deutschemarks (DM). Furthermore, the respondents allege that the Department should not rely on the submitted machine timetable for calculating Petrotub's electricity and gas factors and that for the factory overhead calculation, the category of ''Spare Parts and Auxiliary Materials'' should be excluded.

In accordance with section 735(e) of the Act, we have determined that a ministerial error in the calculation of the German lacquer value was made in our final margin calculation. This determination is based on the information provided in the respondent's January 27, 2000, submission, which includes an invoice indicating that the purchase was made in DM. We have determined that all other allegations of ministerial errors made by both parties are methodological and not ministerial, as defined in section 735(e) of the Act. For a more detailed discussion of the ministerial error allegations, *see* the July 21, 2000

[1] The petitioners in this investigation are Koppel Steel Corporation, Sharon Tube Company, U.S. Steel Group, Lorain Tubular Co. LLC (formally USS Kobe), Vision Metals, Inc. (Gulf States Tube Division) and the United Steel Workers of America.

[2] The respondents in this investigation are Sota Communications Company (Sota) and Metal Business International S.R.L. (MBI). Sota and MBI's respective suppliers, S.C. Silcotub, S.A. (Silcotub) and S.C. Petrotub, S.A. (Petrotub) are the Romanian producers of the subject merchandise.

memorandum, *Amended Final Determination in the Antidumping Duty Investigation of Certain Small Diameter Carbon and Alloy Seamless Standard, Line and Pressure Pipe from Romania: Clerical Error Allegations.* We are amending the final determination of the antidumping duty investigation of certain small diameter carbon and alloy seamless standard, line and pressure pipe from Romania to correct the ministerial error. The revised final weighted-average dumping margins are as follows:

Exporter/manufacturer	Weighted-average margin percentage
Sota Communication Company	15.15
Metal Business International S.R.L	11.08
Romania-Wide Rate	13.06

The Romania-wide rate applies to all entries of the subject merchandise except for entries from exporters/producers that are identified individually above.

Antidumping Duty Order

On August 3, 2000, in accordance with section 735(d) of the Act, the International Trade Commission (ITC) notified the Department that a U.S. industry is materially injured within the meaning of section 735(b)(1)(A) of the Act by reason of imports of certain small diameter carbon and alloy seamless standard, line and pressure pipe from Romania.

Therefore, in accordance with section 736(a)(1) of the Act, the Department will direct the United States Customs Service (U.S. Customs) to assess, upon further advice by the Department, antidumping duties equal to the amount by which the normal value of the merchandise exceeds the export price or constructed export price of the merchandise for all relevant entries of small diameter carbon and alloy seamless standard, line and pressure pipe from Romania. This antidumping duty will be assessed on all unliquidated entries of imports of the subject merchandise that are entered, or withdrawn from warehouse, for consumption on or after February 4, 2000, the date of publication of the Department's preliminary determination in the **Federal Register** (65 FR 5594). On or after the date of publication of this notice in the **Federal Register**, U.S. Customs officers must require, at the same time as importers would normally deposit estimated duties, cash deposits based on the rates listed below:

Exporter/manufacturer	Weighted-average margin percentage
Sota Communication Company	15.15
Metal Business International S.R.L	11.08
Romania-Wide Rate	13.06

This notice constitutes the antidumping duty order with respect to certain small diameter carbon and alloy seamless standard, line and pressure pipe from Romania, pursuant to section 736(a) of the Act. Interested parties may contact the Central Records Unit, Room B–099 of the main Commerce building, for copies of an updated list of antidumping duty orders currently in effect.

This order is issued and published in accordance with section 736(a) of the Act and 19 CFR 351.211.

Dated: August 4, 2000.

Troy H. Cribb,

Acting Assistant Secretary for Import Administration.

[FR Doc. 00–20252 Filed 8–9–00; 8:45 am]

BILLING CODE 3510–DS–P

DEPARTMENT OF COMMERCE

International Trade Administration

[A–533–810]

Stainless Steel Bar From India; Final Results of Antidumping Duty Administrative Review and New Shipper Review and Partial Rescission of Administrative Review

AGENCY: Import Administration, International Trade Administration, Department of Commerce.

ACTION: Notice of final results of 1998–1999 antidumping duty administrative review and new shipper review of stainless steel bar from India.

SUMMARY: On March 8, 2000, the Department of Commerce published the preliminary results of administrative review and new shipper review of the antidumping duty order on stainless steel bar from India. These reviews cover nine manufacturers/exporters. The period of review is February 1, 1998 through January 31, 1999.

Based on our analysis of the comments received, we have made changes in the margin calculations. Therefore, the final results differ from the preliminary results. The final weighted-average dumping margins for the reviewed firms are listed below in the section entitled *Final Results of Review*.

EFFECTIVE DATE: August 10, 2000.

FOR FURTHER INFORMATION CONTACT: Melani Miller or Meg Weems, Import Administration, AD/CVD Enforcement Group I, Office 1, U.S. Department of Commerce, 14th Street and Constitution Avenue, NW, Washington, DC 20230; telephone (202) 482–0116 or 482–2613, respectively.

SUPPLEMENTARY INFORMATION:

Applicable Statute and Regulations

Unless otherwise indicated, all citations to the Tariff Act of 1930, as amended (''the Act''), are references to the provisions effective January 1, 1995, the effective date of the amendments made to the Act by the Uruguay Round Agreements Act (''URAA''). In addition, all references to the Department of Commerce's (''the Department's'') regulations are to 19 CFR part 351 (April 1998).

Background

On March 8, 2000, the Department published the preliminary results of administrative review and new shipper review of the antidumping duty order on stainless steel bar from India (65 FR 12209) (''Preliminary Results''). On July 12, 2000, the Department published its determination that it was not practicable to complete the reviews within the originally anticipated time limit, and extended the time limit for completion of the final results of these reviews until not later than August 4, 2000, in accordance with section 751(a)(3)(A) of the Act (65 FR 42989). The manufacturers/exporters in this administrative review are Bhansali Bright Bars Pvt. Ltd. (''Bhansali''), Chandan Steel Ltd. (''Chandan''), Ferro Alloys Corporation Limited (''Facor''), Isibars Limited (''Isibars''), Jyoti Steel Industries (''Jyoti''), Panchmahal Steel Limited (''Panchmahal''), Parekh Bright Bars Pvt. Ltd. (''Parekh''), Shah Alloys Ltd. (''Shah''), Sindia Steel Limited (''Sindia''), Venus Wire Industries Ltd. (''Venus''), and Viraj Impoexpo Ltd. (''Viraj''). The manufacturer/exporter in this new shipper review is Meltroll Engineering Pvt. Ltd. (''Meltroll''). The period of review (''POR'') is February 1, 1998, through January 31, 1999. We invited parties to comment on our *Preliminary Results* of review. At the request of certain interested parties, we held a public hearing on May 22, 2000.

The Department has conducted this administrative review and new shipper review in accordance with section 751 of the Act.

Scope of the Reviews

Imports covered by these reviews are stainless steel bar (''SSB''). SSB means

articles of stainless steel in straight lengths that have been either hot-rolled, forged, turned, cold-drawn, cold-rolled or otherwise cold-finished, or ground, having a uniform solid cross section along their whole length in the shape of circles, segments of circles, ovals, rectangles (including squares), triangles, hexagons, octagons, or other convex polygons. SSB includes cold-finished SSBs that are turned or ground in straight lengths, whether produced from hot-rolled bar or from straightened and cut rod or wire, and reinforcing bars that have indentations, ribs, grooves, or other deformations produced during the rolling process.

Except as specified above, the term does not include stainless steel semi-finished products, cut length flat-rolled products (i.e., cut length rolled products which if less than 4.75 mm in thickness have a width measuring at least 10 times the thickness, or if 4.75 mm or more in thickness having a width which exceeds 150 mm and measures at least twice the thickness), wire (i.e., cold-formed products in coils, of any uniform solid cross section along their whole length, which do not conform to the definition of flat-rolled products), and angles, shapes and sections.

The SSB subject to these reviews is currently classifiable under subheadings 7222.10.0005, 7222.10.0050, 7222.20.0005, 7222.20.0045, 7222.20.0075, and 7222.30.0000 of the Harmonized Tariff Schedule of the United States (''HTSUS''). Although the HTSUS subheadings are provided for convenience and customs purposes, our written description of the scope of these reviews is dispositive.

Rescission

As noted in our *Preliminary Results,* Bhansali, Jyoti, and Shah reported no shipments of the subject merchandise to the United States during the POR that were not already covered by a previous segment of this proceeding. We independently confirmed this information with the Customs Service. Therefore, in accordance with 19 CFR 351.213(d)(3), we are rescinding the review with respect to these companies.

Analysis of Comments Received

All issues raised in the case and rebuttal briefs by parties to these reviews are addressed in the Decision Memo from Susan Kuhbach, Acting Deputy Assistant Secretary, Import Administration, to Richard W. Moreland, Acting Assistant Secretary for Import Administration, dated August 3, 2000, which is adopted by this notice. A list of the issues which parties have raised and to which we have responded, all of which are in the Decision Memo, is attached to this notice as an Appendix. Parties can find a complete discussion of all issues raised in this review and the corresponding recommendation in this public memorandum which is on file in the Central Records Unit, room B–099 of the main Department building. In addition, a complete version of the Decision Memo can be accessed directly on the Web at http://ia.ita.doc.gov/. The paper copy and electronic version of the Decision Memo are identical in content.

Use of Facts Otherwise Available

In the *Preliminary Results,* we applied total adverse facts available to Panchmahal, Viraj and Parekh. As total facts available, we used 21.02 percent. Upon reviewing the arguments presented by interested parties, as well as a thorough review of all the information on the record, we have determined that the continued use of total facts available with respect to Panchmahal and Viraj is unwarranted. We have determined, however, that the use of partial facts available is necessary in certain circumstances for Panchmahal and Viraj. For a complete discussion on why we are applying partial facts available for these final results, see Facts Available, Comments 1 and 4 in the Decision Memo.

For Panchmahal, we have used constructed value as the basis for normal value as facts available. In addition, we have added the highest finishing cost reported based on size and finishing operation for all products.

For Viraj, we have used third country sales as the basis for normal value. Where there were no identical matches, we used the all-others rate, 12.45, as facts available.

As in the *Preliminary Results,* we continue to find that the use of total facts available for Parekh is warranted. We have now corroborated the facts available rate of 21.02 percent for this review. For a further discussion of this issue, see Facts Available, Comment 5 in the Decision Memo.

Changes From the Preliminary Results

We calculated export price and normal value based on the same methodology used in the *Preliminary Results,* with the following exceptions:

Chandan

We used constructed value (''CV'') to calculate normal value (''NV'') for the company's U.S. sales that did not have contemporaneous home market sales for matching purposes. In accordance with section 773(e)(1) of the Act, we calculated CV based on the sum of Chandan's cost of materials, labor, overhead, G&A, selling, profit, and U.S. packing costs.

Facor

We adjusted Facor's direct material costs and credit expenses, and corrected certain ministerial errors (*see* Cost of Production/Constructed Value, Comment 3; Verification, Comment 1; and Ministerial Errors, Comment 1 in the Decision Memo).

Isibars

We adjusted the payment date for several sales and allowed certain interest revenue adjustments (*see* Export Price, Comment 2 of the Decision Memo).

Panchmahal

To determine whether sales of stainless steel bar from India to the United States were made at less than NV, we compared export price (''EP'') to the NV, as discussed below. We based NV on CV (*see* Facts Available, Comment 1, in the Decision Memo).

In calculating Panchmahal's price to the United States, we used EP, in accordance with section 772(a) of the Act, because the subject merchandise was sold directly to the first unaffiliated purchaser in the United States prior to importation into the United States and use of constructed export price was not otherwise indicated.

We calculated EP based on either the CIF or CFR price to the United States. In accordance with section 772(c)(2) of the Act, we made deductions for discounts, foreign inland freight, international freight, marine insurance, and brokerage and handling.

In accordance with section 773(e)(1) of the Act, we calculated CV based on the sum of Panchmahal's cost of materials, labor, overhead, G&A, selling, profit, and U.S. packing costs. Finally, for Panchmahal's price-to-CV comparisons, we made adjustments to CV in accordance with section 773(a)(8) of the Act.

Sindia and Venus

Cost of Production Analysis

As noted in the *Preliminary Results,* the Department found reasonable grounds to believe or suspect that sales by these companies in their comparison markets were made at prices below their respective costs of production (''COP''), based on cost allegations made by the petitioners. However, time did not permit us to examine prices and costs for the *Preliminary Results.* Therefore, we are conducting a COP analysis for the first time in these final results for

Sindia and Venus. This analysis is described below.

A. Calculation of COP

In accordance with section 773(b)(3) of the Act, we calculated a weighted-average COP, by model, based on the sum of the cost of materials, fabrication, general and administrative expenses, and packing costs. For both Sindia and Venus, we recalculated the reported COP and CV by averaging the material expenses reported for identical models to ensure that identical merchandise had single, model-specific cost of materials (''COM'') values (*see* Facts Available, Comment 3 of the Decision Memo).

B. Test of Comparison Market Prices

We compared the weighted-average COP for the respective companies to comparison market sales of the foreign like product, as required under section 773(b) of the Act, in order to determine whether these sales had been made at prices below the COP. We deducted from comparison market prices movement charges, discounts, and direct and indirect selling expenses.

In determining whether to disregard comparison market sales made at prices below the COP, we examined whether such sales were made (1) within an extended period of time in substantial quantities, and (2) at prices which permitted the recovery of all costs within a reasonable period of time in the normal course of trade, in accordance with sections 773(b)(1)(A) and (B) of the Act.

C. Results of the COP Test

Pursuant to section 773(b)(2)(C) of the Act, where less than 20 percent of a respondent's sales of a given product are made at prices below the COP, we do not disregard any below-cost sales of that product because the below-cost sales were not made in ''substantial quantities.'' However, where 20 percent or more of a respondent's sales of a given product were at prices less than the COP, we determined that such sales have been made in ''substantial quantities'' within an extended period of time in accordance with section 773(b)(2)(B) of the Act. In such cases, because we compared prices to POR-average costs, we also determined that such sales were not made at prices which would permit recovery of all costs within a reasonable period of time, in accordance with section 773(b)(2)(D) of the Act. Therefore, we disregarded the below-cost sales.

We found that both Sindia and Venus made comparison market sales at below COP prices within an extended period of time in substantial quantities. Further, we found that these sales prices did not permit the recovery of costs within a reasonable period of time. Therefore, we excluded these sales from our analysis in accordance with section 773(b)(1) of the Act.

Calculation of CV

In accordance with section 773(e)(1) of the Act, we calculated CV for Sindia and Venus based on the sum of the respective respondent's cost of materials, labor, overhead, G&A, selling, profit, and U.S. packing costs.

Having completed our cost investigation, we conducted comparisons as discussed below.

Price-to-Price Comparisons

For comparisons to those products for which there were comparison market sales at prices at or above the COP, we based NV on prices to comparison market customers. We made adjustments, where appropriate, for physical differences in the merchandise in accordance with section 773(a)(6)(C)(ii) of the Act. We also made additions for interest revenue and deductions, where appropriate, for rebates, inland freight, international freight, marine insurance, and brokerage and handling. In addition, we made circumstance-of-sale adjustments for credit and bank charges, where appropriate. Finally, in accordance with section 773(a)(6)(A) of the Act, we deducted comparison market packing costs and added U.S. packing costs.

Price-to-CV Comparisons

For price-to-CV comparisons, we made adjustments to CV in accordance with section 773(a)(8) of the Act.

For Sindia, we made further changes as follows:

1. We recalculated its yield loss ratio to account for total waste as reported in Sindia's Annual Report. See Cost of Production/Constructed Value, Comment 6 in the Decision Memo.

2. We recalculated its fixed overhead rate to account for total insurance expenses. Cost of Production/Constructed Value, Comment 7 in the Decision Memo.

3. We recalculated SG&A and interest expense ratios. Cost of Production/Constructed Value, Comments 9 and 10 in the Decision Memo.

Viraj

To determine whether sales of stainless steel bar from India to the United States were made at less than NV, we compared EP to the NV, as discussed below.

In calculating the price to the United States, we used EP, in accordance with section 772(a) of the Act, because the subject merchandise was sold directly to the first unaffiliated purchaser in the United States prior to importation into the United States and use of constructed export price was not otherwise indicated.

We calculated EP based on the CIF price to the United States. In accordance with section 772(c)(2) of the Act, we made deductions for foreign inland freight, international freight, marine insurance, and brokerage and handling.

Viraj claimed an upward adjustment to EP for a ''duty drawback'' program. We make such an adjustment when a respondent can demonstrate that it meets both parts of our two-part test. There must be: (1) A sufficient link between the import duty and the rebate, and (2) a sufficient amount of raw materials imported and used in the production of the final exported product (*see Certain Welded Carbon Standard Steel Pipes and Tubes from India,* 62 FR 47632, 47635 (September 10, 1997)). Because Viraj did not demonstrate a sufficient link between the import duty and the rebate, we have not made an adjustment to EP. Specifically, Viraj did not demonstrate that the rebate received upon exportation directly related to specific import duties paid on materials used in the production of the subject merchandise.

In the case of Viraj, we based NV on the company's sales to a third country market as facts available. (For a further discussion of this issue, see Facts Available, Comment 4, in the Decision Memo.) Viraj's aggregate sales of the foreign like product to its third country market, Canada, were greater than five percent of its sales, by volume, of the subject merchandise to the United States. Thus, Viraj's third country market satisfies the criteria of section 773(a)(1)(B)(ii) of the Act.

In using these sales to Canada, we made adjustments, where appropriate, for physical differences in the merchandise in accordance with section 773(a)(6)(C)(ii) of the Act. We also made deductions, where appropriate, for foreign inland freight, international freight, marine insurance, and brokerage and handling. In addition, we made circumstance-of-sale adjustments for credit and bank charges, where appropriate. Finally, in accordance with section 773(a)(6) of the Act, we deducted comparison market packing costs and added U.S. packing costs.

Final Results of Review

We determine that the following percentage weighted-average margins

exist for the period February 1, 1998, through January 31, 1999:

Manufacturer/exporter	Margin (percent)
Chandan	0.00
Facor	19.54
Isibars	0.07 (de minimis)
Panchmahal	10.24
Parekh	21.02
Sindia	1.33
Venus	0.33 (de minimis)
Viraj	2.50
Meltroll	0.00

The Department shall determine, and Customs shall assess, antidumping duties on all appropriate entries. In accordance with 19 CFR 351.212(b), we have calculated exporter/importer-specific assessment rates. With respect to both export price and constructed export price sales, we divided the total dumping margins for the reviewed sales by the total entered value of those reviewed sales for each importer. We will direct Customs to assess the resulting percentage margins against the entered Customs values for the subject merchandise on each of that importer's entries under the relevant order during the review period.

Cash Deposit Requirements

The following deposit requirements will be effective upon publication of this notice of final results of administrative review and new shipper review for all shipments of stainless steel bar from India entered, or withdrawn from warehouse, for consumption on or after the date of publication, as provided by section 751(a)(1) of the Act: (1) The cash deposit rate for the reviewed companies will be the rates shown above except that, for firms whose weighted-average margins are less than 0.5 percent and, therefore, de minimis, the Department shall require no deposit of estimated antidumping duties; (2) for previously reviewed or investigated companies not listed above, the cash deposit rate will continue to be the company-specific rate published for the most recent period; (3) if the exporter is not a firm covered in these reviews, a prior review, or the original investigation, but the manufacturer is, the cash deposit rate will be the most recent rate established for the manufacturer of the merchandise; and (4) the cash deposit rate for all other manufacturers or exporters will continue to be 12.45 percent. This rate is the ''all others'' rate from the LTFV investigation (59 FR 66915, 66921, December 28, 1994).

These deposit requirements will remain in effect until publication of the final results of the next administrative review.

This notice also serves as a final reminder to importers of their responsibility under 19 CFR 351.402(f) to file a certificate regarding the reimbursement of antidumping duties prior to liquidation of the relevant entries during this review period. Failure to comply with this requirement could result in the Secretary's presumption that reimbursement of antidumping duties occurred and the subsequent assessment of double antidumping duties.

This notice also serves as a reminder to parties subject to administrative protective orders (''APOs'') of their responsibility concerning the disposition of proprietary information disclosed under APO in accordance with 19 CFR 351.305(a)(3). Timely written notification of the return/destruction of APO materials or conversion to judicial protective order is hereby requested. Failure to comply with the regulations and the terms of an APO is a violation which is subject to sanction.

We are issuing and publishing this determination and notice in accordance with sections 751(a)(1), 751(a)(2)(B), and 777(i)(1) of the Act.

Appendix—Issues in Decision Memo

Comments and Responses
1. Facts Available
2. Cost of Production/Constructed Value
3. Export Price
4. Affiliation
5. Normal Value
6. Verification
7. Ministerial Errors
8. Other Issues

Dated: August 3, 2000.

Richard W. Moreland,

Acting Assistant Secretary for Import Administration.

[FR Doc. 00–20328 Filed 8–9–00; 8:45 am]

BILLING CODE 3510–DS–U

DEPARTMENT OF COMMERCE

International Trade Administration

[A–570–601]

Tapered Roller Bearings and Parts Thereof, Finished and Unfinished, From the People's Republic of China; Amended Notice of Initiation and Rescission in Part for the 1999–2000 Antidumping Duty Administrative Review

AGENCY: Import Administration, International Trade Administration, Department of Commerce.

ACTION: Amended Notice of Initiation and Rescission in Part for the 1999–2000 Antidumping Duty Administrative Review.

SUMMARY: On July 31, 2000, in response to a request made by Wafangdian Bearing Group Corp. Import & Export Company, Zhejiang Machinery Import & Export Corp., Wanxiang Group Corporation, China National Machinery Import & Export Corporation, Liaoning MEC Group Co. Ltd., Luoyang Bearing Corp. (Group), Premier Bearing & Equipment Ltd., Tianshui Hailin Import and Export Corporation, Zhejiang Changshan Changhe Bearing Corp., and Weihai Machinery Holding (Group) Co., Ltd. and the petitioner, The Timken Company, the Department of Commerce published the notice of initiation of an antidumping duty administrative review on Tapered Roller Bearings and Parts Thereof, Finished and Unfinished, From the People's Republic of China, for the period June 1, 1999, through May 31, 2000. This notice of initiation inadvertently omitted several companies for which a request for review had been made, and also included several companies for which a request for review had not been made. Thus, we are now rescinding this review in part for those companies which were inadvertently listed in the notice of initiation for which a review was not requested, and amending the notice of initiation to include in the review those companies which were omitted from the original initiation notice.

EFFECTIVE DATE: August 10, 2000.

FOR FURTHER INFORMATION CONTACT: Melani Miller, Import Administration, International Trade Administration, U.S. Department of Commerce, 14th Street and Constitution Avenue, NW, Washington DC 20230; telephone (202) 482–0116.

SUPPLEMENTARY INFORMATION:

Applicable Statute and Regulations

Unless otherwise indicated, all citations to the Tariff Act of 1930, as

amended (''the Act''), are references to the provisions effective January 1, 1995, the effective date of the amendments made to the Act by the Uruguay Round Agreements Act (''URAA''). In addition, all references to the Department of Commerce's (''the Department's'') regulations are to 19 CFR part 351 (April 1999).

Background

On June 26, 2000, Liaoning MEC Group Co. Ltd., Premier Bearing & Equipment Ltd., Tianshui Hailin Import and Export Corporation, Weihai Machinery Holding (Group) Co., Ltd. (''Weihai''), Wanxiang Group Corporation, and China National Machinery Import & Export Corporation requested administrative reviews for the period June 1, 1999, through May 31, 2000 (''POR''). On June 30, 2000, Zhejiang Machinery Import & Export Corp. (''ZMC''), Wafangdian Bearing Group Corp. Import & Export Company (''Wafangdian''), Luoyang Bearing Corp. (Group) (''Luoyang''), and Zhejiang Changshan Changhe Bearing Corp. (''ZCCBC''), also requested administrative reviews for the POR. On June 30, 2000, the petitioner, The Timken Company, also requested that the Department conduct an administrative review for the POR.

On July 31, 2000, the Department published a notice of initiation of an antidumping duty administrative review on Tapered Roller Bearings and Parts Thereof, Finished and Unfinished, From the People's Republic of China, for the period June 1, 1999 through May 31, 2000. See Initiation of Antidumping and Countervailing Duty Administrative Reviews and Requests for Revocation in Part, 65 FR 46687 (July 31, 2000).

Amended Notice of Initiation

In its July 31, 2000, notice of initiation, the Department inadvertently omitted several companies from the notice of initiation for this proceeding. Because the Department has received timely requests, in accordance with § 351.213(b) of the Department's regulations, for administrative reviews from the petitioner and all companies requesting reviews, as noted above, we are amending our July 31, 2000, notice of initiation to include the following companies in accordance with § 351.221(c)(1) of the Department's regulations: Weihai, Luoyang, ZCCBC, Wafangdian, ZMC, China National Bearing Joint Imp. & Exp. Corp. (CBEC), Dalian Machine Tools Parts Factory, Zhejiang Xinchang Bearing Factory, Hebei Rolling Bearing, Hebei Rolling Mill Bearing Group Company, Hunan Hengyang Bearing Factory, China Machine-Building International Corp, Distribution Services Ltd. (Hong Kong), and Distribution Services Ltd. (Shanghai).

Because we have found it necessary to amend the original notice of initiation, the date of initiation for all companies covered by this review, including those companies for which an administrative review was initiated pursuant to the original July 31, 2000, notice, will be the date of publication of this notice.

Rescission in Part of Review

As noted above, several companies were also inadvertently included in the original July 31, 2000, notice of initiation for which no request for review was made. Because no request for review was made by any interested party in accordance with section 751(a)(1) of the Act and § 351.213(b) of the Department's regulations, we are rescinding this review in part in accordance with § 351.213(d)(2) with respect to the following companies:

Zhejiang changsan (Bearing) Group Co. Ltd.
Yantai CMC Bearing Co., Ltd.
Louyang Bearing Factory
Wafangdian Bearing Factory
Wafangdian Bearing Industry Co.
Wafangdian Bearing Factory, Liaoning Province
China National Machinery & Equipment Import & Export Corporation, Beijing
China National Machinery and Equipment Import and Export Corporation (CMEC), Beijing
Henan Machinery and Equipment Import and Export Corporation
The China National Machinery and Equipment Import and Export Corporation, Henan Co., Ltd.
Guizhou Machinery Import and Export Corporation
Liaoning Machinery Import and Export Corporation
The China National Machinery and Equipment Import and Export Corporation, Liaoning Co., Ltd.
Jilin Machinery Import and Export Corporation
China National Machinery Import and Export Corporation of Jilin Province
The China National Machinery and Equipment Import and Export Corporation, Guizhou Branch
China National Machinery and Equipment Import Export Company (CMEC), Zhejiang
Guizhou Machinery Import and Export Corporation Guiyang, Guizhou China
China National Automotive Industry Import & Export Corporation
China National Automotive Industry Import & Export Corporation, Guizhou China
China National Automotive Industry Guizhou Import/ Export Corp.
Xiangfan Machinery Import & Export (Group) Corp.
Xiangfan Machinery Foreign Trade Corporation
Xiangfan International Trade Corp.
Shandong Machinery and Equipment Import & Export Corporation
Shandong Machinery and Equipment Import & Export Group Corporation
Hangzhou Metals, Minerals, Machinery & Chemical Import Export Corporation
China Great Wall Industry Company
Chin Jun Industrial, Ltd.
China National Machinery Import/Export Corporation, Yantai
China National Machinery and Equipment Corp., Changsha
China National Machinery and Equipment Import Export Company (CMEC), Hunan
Shanghai Machinery & Equipment Import & Export Corp.
Zhejang Machinery Import/Export Corp.
Shandong Machinery Import/Export Corp.
Shaanxi Machinery & Equipment I/E Corp.
Guangdong Machinery and Equipment Import & Export
Guangdong Machinery and Equipment Import & Export (Group) Corporation
East Sea Bearing Co., Ltd.
Shanghai General Bearing Co., Ltd.
Luoyang Bearing Research Institute of the Ministry Of Machinery & Electronics Industry
The Tenth Institute of Machinery Project Planning & Research of the Ministry of Machinery & Electronics Industry
Shanghai Rolling Bearing Factory
Shanghai Miniature Bearing Factory
Hailin Bearing Factory
Beijing Bearing Research Institute
Changzhi People Factory
Shenyang Steel Ball Plant
Wuxi Miniature Bearing Factory
Shanghai Bearing Technology Research Institute
Shanghai Steel Ball Plant
Qingdao Steel Ball Plant
Hhubei Steel Ball Plant
Chongqing Steel Ball Plant
Tianshui Bearing Instrument Plant
Beijing Needle Roller Bearing Factory
Tianjin Miniature Bearing Factory
Shanghai Needle Roller Bearing Factory
Luoyang Dongfeng Bearing Factory
Ghangge Bearing Factory
The Second Machine Tools Electric Apparatus Plant of Anyang
Chengdu Bearing Company
Dalian Bearing Instrument Plant
China National Automotive Import & Export Corporation
China National Automotive Industry Import & Export Corporation
China National Automotive Industry Xiamen Import/Export Corporation/Shanghai
China National Automotive Industry Xiamen Import/Export Corporation
China National Machinery/Equipment Corp., Harbin Branch
Kenwa Shipping Co., Ltd.
Pantainer Express Line Co.
Intermodal Systems Ltd.
Ideal Consolidators Ltd.
Cargo Services Far East Ltd.
China Resources Transportation & Godown Co., Ltd.
China Travel Service (HK) Ltd.
Kaitone Shipping Co., Ltd.
Profit Cargo Service Co., Ltd.
United Cargo Management, Inc.
Wafangdian Hyatt Bearing Manufacturing

Co., Ltd.
China National Bearing Joint Export Corp.
PFL Pacific Forwarding, Ltd.
Wah Shun Shipping Co., Ltd.
Sunway Line, Inc.
Trans-Ocean Bridge Services, Ltd.
Scanwell Container Line Ltd.
Scanwell Consolidators & Forwarders Ltd.
China Machine-Bearing International Corp.
Hyaline Shipping (HK) Co., Ltd.
Waiwell Shipping Ltd.
Special Line Ltd.
YK Shipping International, Inc.
Blue Anchor Line Co.
Onan Shipping Ltd.
Shanghai Bearing Corporation
China National Machinery Imp. & Exp. Corp., Chongquing Branch
Distribution Services Ltd.
Inteks Inc. N.V.O.C.C.
Shaanxi Machinery & Equipment Imp. & Exp. Corp.
United Cargo Management Inc., Dalian Office
Zhejiang East Sea Bearing Co., Ltd.
Mayer Shipping Ltd. HK
SEC Line Ltd.
Jebsin Shipping Ltd.
Heika Express International Ltd.
J.P. Freight, Inc. Shanghai, PRC
Brilliant Ocean Ltd. Corp. (USA)
Roson Express Int'l Co., Ltd.
Streamline Shippers Association Hong Kong
Laconic Freight Forwarding Co., Ltd.
Mitrans Shipping Co., Ltd.
The Ultimate Freight Management (H.K.) Ltd.
Ideal Consolidators Ltd.
Luoyang Bearing Research Institute
Burlington Air Express Ltd.
Janco Int'l Freight Ltd.
Sunrise Industrial Technology Co.
Kin Bridge Express (USA) Inc.
Wice Marine Services Ltd.
Welley Shipping, Ltd.
WSA Lines, Ltd.
Triumph Express Service Int'l Ltd.
World Pacific Container Line Ltd.
Hellman Int'l Forwarders, Ltd.
Ideal Ocean Lines, Ltd.
MSAS Cargo Int'l (Far East) Ltd.
Ocean Navigator Express Line
Sunrise Industries Technology Co.
Apex Maritime Co., Inc.
Apex Maritime Co., Inc. (Dalian)
Dalian Machine Tool Accessories
Everich Shipping, Ltd.
Eternity Int'l Freight Forwarder
Trans-Am Sea Freight (HK) Ltd.
Zhong Shan Transportation Co., Ltd.
Leader Express International (HK)
Transnation Shipping Ltd.
Mayer Shipping Ltd.
Orient Star Consolidating
Buyers Consolidators Ltd.
Trust Freight Services, Inc.
Seatop Shipping Ltd.
AEL Asia Express (HK) Ltd.
Kenwa Shipping Co., Ltd.
Exbo Shipping Co., Ltd.
Cots Shipping Co., Ltd.
Streamline Shippers Association
Air Sea Container Line, Inc.
CL Consolidator Services Ltd.
Scanwell Freight Express Co., Ltd.
C.U. Transport, Inc.
Ensign Freight (China) Ltd.
Air Sea Transport, Inc.
Air Sea Transport, Inc., Yantai Office
Air Sea Transport, Inc., Dalian
Wuhan Machinery & Equipment
Hang Cheong Shipping Co., Ltd.
Deckwell Sky Express, Inc.
China Machinery Equipment Import & Export Wuxi Co., Ltd.
China Machinery & Equipment Import & Export Co., Ltd. (Jiangying Bearing Works)
China Jiangsu Machinery and Equipment Import & Export Wuxi Co., Ltd.
China National Packaging Import & Export Nanjing Corporation
China National Machinery and Equipment Import and Export Corporation (CMEC)
CMEC Sichan
CMEC Henan
CMEC Shandong
CMEC Jiangsu
CMEC Guangdong
CMEC Hebei
CMEC Hunan
CMEC Anhui
CMEC Hubei
CMEC Zhejiang
CMEC Liaoning
CMEC Jiangxi
CMEC Yunnan
CMEC Heilongjiang
CMEC Shaanxi
CMEC Guizhou
CMEC Fujian
CMEC Shanxi
CMEC Jilin
CMEC Gansu
CMEC Hainan
CMEC Qinghai
CMEC Chengdu
CMEC Zengzhou
CMEC Tsinan
CMEC Nanjing
CMEC Guangzhou
CMEC Shijiazhuang
CMEC Changsha
CMEC Hefei
CMEC Wuhan
CMEC Hangzhou
CMEC Shenyang
CMEC Nanchang
CMEC Kunming
CMEC Harbin
CMEC Xian
CMEC Guiyang
CMEC Fuzhou
CMEC Taiyuan
CMEC Changchun
CMEC Lanzhou
CMEC Haikou
CMEC Xining
CMEC Guangxi Zhuang
CMEC Nei Monggol
CMEC Xinjiang Uygur
CMEC Ningxia Hui
CMEC Xizang
CMEC Nanning
CMEC Hohhot
CMEC Urumqi
CMEC Yinchuan
CMEC Lhasa
CMEC Shanghai
CMEC Beijing
CMEC Tianjin
Sichuan CMC
Henan CMC
Shandong CMC
Jiangsu CMC
Guangdong CMC
Hebei CMC
Hunan CMC
Anhui CMC
Hubei CMC
Zhejiang CMC
Liaoning CMC
Jiangxi CMC
Yunnan CMC
Heilongjiag CMC
Shaanxi CMC
Guizhou CMC
Fujian CMC
Shanxi CMC
Jilin CMC
Gansu CMC
Hainan CMC
Qinghai CMC
Chengdu CMC
Zengzhou CMC
Tsinan CMC
Nanjing CMC
Guangzhou CMC
Shijiazhuang CMC
Changsha CMC
Hefei CMC
Wuhan CMC
Hangzhou CMC
Shenyang CMC
Nanchang CMC
Kunming CMC
Harbin CMC
Xian CMC
Guiyang CMC
Fuzhou CMC
Taiyuan CMC
Changchun CMC
Lanzhou CMC
Haikou CMC
Xining CMC
Guangxi Zhuang CMC
Nei Monggol CMC
Xinjiang Uygur CMC
Ningxia Hui CMC
Xizang CMC
Nanning CMC
Hohhot CMC
Urumqi CMC
Yinchuan CMC
Lhasa CMC
Shanghai CMC
Beijing CMC
Tianjin CMC

This partial rescission of the 1999–2000 administrative review is only applicable to those companies specifically named above, and does not apply to companies with similar names or companies for which a review was initiated pursuant to the original notice of initiation that are not specifically excluded above by the name under which the review was requested by the petitioner and respondents.

This notice is issued in accordance with section 777(i)(1) of the Act.

Dated: August 4, 2000.

Richard W. Moreland,

Deputy Assistant Secretary, AD/CVD Enforcement I.

[FR Doc. 00–20330 Filed 8–9–00; 8:45 am]

BILLING CODE 3510–DS–P

DEPARTMENT OF COMMERCE

International Trade Administration

[A–580–810]

Certain Welded ASTM A–312 Stainless Steel Pipe From the Republic of Korea; Rescission of Antidumping Duty Administrative Review

AGENCY: Import Administration, International Trade Administration, Department of Commerce.

ACTION: Notice of Rescission of Antidumping Duty Administrative Review.

SUMMARY: On January 26, 2000, the Department of Commerce (the Department) initiated an administrative review of the antidumping duty order on certain welded ASTM A–312 stainless steel pipe (WSSP) from Korea (65 FR 4228). The Department initiated this review at the request of respondent, SeAH Steel Corporation, Ltd. (SeAH). The review covers one manufacturer, SeAH. The period of review is December 1, 1998 through November 30, 1999. On January 31, 2000, SeAH withdrew its request for a review. The Department has received no additional submissions from any party concerning this review. We are rescinding this review.

EFFECTIVE DATE: August 10, 2000.

FOR FURTHER INFORMATION CONTACT: Mark Hoadley, Import Administration, International Trade Administration, U.S. Department of Commerce, Washington, DC 20230; telephone: (202) 482–0666.

SUPPLEMENTARY INFORMATION:

The Applicable Statute

Unless otherwise indicated, all citations to the Tariff Act of 1930, as amended (the Act), are references to the provisions effective January 1, 1995, the effective date of the amendments made to the Act by the Uruguay Round Agreements Act. In addition, unless otherwise indicated, all citations to the Department's regulations are to 19 CFR part 351 (1999).

Background

On January 26, 2000, the Department initiated an administrative review of the antidumping duty order on WSSP from Korea (65 FR 4228).

Scope of Review

The merchandise covered by this order consists of austenitic stainless steel pipe that meets the standards and specifications set forth by the American Society for Testing and Materials (ASTM) for the welded form of chromium-nickel pipe designated ASTM A–312. WSSP is produced by forming stainless steel flat-rolled products into a tubular configuration and welding along the seam. WSSP is a commodity product generally used as a conduit to transmit liquids or gases. Major applications for WSSP include, but are not limited to, digester lines, blow lines, pharmaceutical lines, petrochemical stock lines, brewery process and transport lines, general food processing lines, automotive paint lines and paper process machines. Imports of these products are currently classifiable under the following United States Harmonized Tariff Schedule (HTS) subheadings: 7306.40.5005, 7306.40.5015, 7306.40.5045, 7306.40.5060 and 7306.40.5075. Although these subheadings include both pipes and tubes, the scope of this order is limited to welded austenitic stainless steel pipes. Although HTS subheadings are provided for convenience and Customs purposes, the written description of the scope of this order remains dispositive.

Rescission of Review

Section 351.213(d)(1) of the Department's regulations allows the Department to rescind a review if the party that requested the review withdraws the request within 90 days of the publication date of the initiation notice. The Department published the initiation notice on January 26, 2000 (65 FR 4228). SeAH withdrew its request on January 31, 2000. SeAH was the only party to request a review for this period of the proceeding. Therefore, in accordance with section 351.213(d)(1), we are rescinding this review. We will instruct customs to liquidate the entries made during the POR at the rate entered.

We are publishing this notice in accordance with section 351.213(d)(4) of our regulations.

Dated: August 3, 2000.

Richard O. Weible,

Acting Deputy Assistant Secretary, AD/CVD Enforcement Group III.

[FR Doc. 00–20332 Filed 8–9–00; 8:45 am]

BILLING CODE 3510–DS–P

DEPARTMENT OF COMMERCE

National Oceanic and Atmospheric Administration

National Estuarine Research Reserve System

AGENCY: Estuarine Reserves Division, Office of Ocean and Coastal Resource Management, National Ocean Service, National Oceanic and Atmospheric Administration, U.S. Department of Commerce.

ACTION: Notice of Intent; Information and Scoping Meetings for the Goat Canyon Enhancement Project.

SUMMARY: The National Ocean Service announces its intention to prepare a joint draft environmental impact statement/environmental impact report (EIS/EIR) with the State of California Department of Parks and Recreation for the construction of sedimentation, flood control and other facilities within and adjacent to Goat Canyon, located in San Diego County, California, in the vicinity of the international border with Mexico and within the Tijuana River National Estuarine Research Reserve (TRNERR). These facilities are intended to enhance the existing Goat Canyon Creek and its natural habitat communities, including the Tijuana River Estuary, through the management of sediment within the canyon and on the adjacent alluvial fan. The scope of analysis will include all activities addressing the enhancement of Goat Canyon Creek.

The National Oceanic and Atmospheric Administration (NOAA) will hold a scoping meeting on August 25, from 1–3 p.m. to receive public input on the range of issues and alternatives to be covered in the joint EIS/EIR. NOAA is also accepting written comments on these topics.

DATES: Written comments will be accepted through September 8, 2000.

ADDRESSES: Written comments and requests to be included on a mailing list of persons interested in the joint EIS/EIR should be sent to Nina Garfield, NOAA–ERD, SSMC–4, 11th Floor, 1305 East West Hwy, Silver Spring, MD, 20910.

FOR FURTHER INFORMATION CONTACT: Tessa Roper, Project Manager, Goat Canyon Enhancement Project, Southwest Wetlands Interpretive Association, 301 Caspian Way, Imperial Beach, CA, 91932, tel. 619–575–3613.

SUPPLEMENTARY INFORMATION: The Goat Canyon Enhancement Project will be conducted within the TRNERR, in San Diego County, California and includes a series of sediment retention basins to be constructed within the Goat Canyon Creek watershed beginning at the international border and continuing downstream. Through the National Estuarine Research Reserve Program, NOAA is providing partial funding for the project. In addition to the construction of sedimentation basins, portions of Goat Canyon Creek will be restored to a creek bed that follows the

coastal bluffs before turning westward. The project also includes a realignment of Monument Road through Border Field State Park lands. These facilities are intended to enhance the existing Goat Canyon Creek and its natural habitat communities, including the Tijuana River Estuary, through the management of sediment within the canyon and on the adjacent alluvial fan. The proposed project is in conformance with the Final Goat Canyon/Canon de los Laureles Enhancement Plan prepared by the Southwest Wetlands Interpretive Association (SWIA). It is anticipated that the project will feature some variation of two small, in-line sedimentation basins and two to three larger avulsion basins in the alluvial fan. A realigned, elevated Monument Road will be integrated into the basin layout as part of the project. In addition, several staging areas and loading pads will be included for system maintenance. Maintenance is expected to include, minimally, the removal of debris following storm events, the periodic removal of accumulated sediment, and the management of vegetation growth.

Alternatives

In the joint EIS/EIR, NOS will consider a reasonable range of alternatives for the enhancement of Goat Canyon, including alternatives to the location and number of sedimentation and avulsion basins and the No Action alternative, and will evaluate their potential environmental impacts. Through this scoping process, NOS requests public input on the scope of issues to be addressed, to identify significant issues related to the project, and public input on enhancement alternatives that should be considered in the joint EIS/EIR. At the scoping, NOS will present draft alternatives that will be developed further in response to comments on the joint EIS/EIR.

Issues

Based on a preliminary review it is anticipated that the project may result in significant environmental impacts in the following areas: aesthetics, air quality, biological resources, cultural resources, geology and soils, hydrology and water quality, land use and planning, recreational resources, noise, public services, transportation/traffic, and utilities and service systems. For each of these issues, the existing baseline conditions will be described in the Affected Environment portion of the EIS/EIR; the nature and significance of any impacts expected from the proposed project and the alternatives to the project will be summarized in the Environmental Consequences section; and mitigation measures for adverse effects will be provided in the Mitigation Measures section. In addition to these sections, the EIS/EIR will contain all other mandatory sections including a Summary, Introduction, Environmental Setting, a Purpose of and Need for Action statement, an Alternatives section, analysis of the potential Cumulative Effects, Effects Found Not To Be Significant, and Growth-Inducing Effects.

Consultations

Pursuant to section 7(a)(2) of the Endangered Species Act (ESA), consultations for listed species and critical habitat affected by the proposal to enhance Goat Canyon will be initiated with the U.S. Fish and Wildlife Service and the National Marine Fisheries Service. These consultations will analyze the individual and cumulative impacts of activities relating to Goat Canyon to determine whether the impacts are likely to jeopardize the continued existence of listed species.

Public Involvement

Scoping for the joint EIS/EIR begins with publication of this notice. A formal scoping meeting to receive comments will be held at the Tijuana Estuary Visitor Center, 301 Caspian Way, Imperial Beach, CA, on August 25, 2000 from 1–3 p.m.

Special Accommodations

The meeting is physically accessible to people with disabilities. Requests for sign language interpretation or other auxiliary aids should be directed to Tessa Roper, Goat Canyon Enhancement Project, Southwest Wetlands Interpretive Association, 301 Caspian Way, Imperial Beach, CA, 91932, tel. 619–575–3613.

Federal Domestic Assistance Catalog Number 11.420 (Coastal Zone Management) Research Reserves.

Dated: August 4, 2000.

Captain Ted I. Lillestolen,

Deputy Assistant Administrator For Ocean Services and Coastal Zone Management.

[FR Doc. 00–20281 Filed 8–9–00; 8:45 am]

BILLING CODE 3510–08–P

DEPARTMENT OF COMMERCE

Technology Administration

Technology Administration Performance Review Board Membership—September 2000

The Technology Administration Performance Review Board reviews performance appraisals, agreements, and recommended actions pertaining to employees in the Senior Executive Service and reviews performance-related pay increases for ST–3104 employees. The Board makes recommendations to the appropriate appointing authority concerning such matters so as to ensure the fair and equitable treatment of these individuals.

The following is the full membership of the Board:

Cathleen Campbell (C), Director of International Technology, Policy and Programs, Technology Administration, Washington, DC 20230. Appointment Expires: 12/31/02.

Gordon W. Day (C), Chief, Optoelectronics Division, Optoelectronics Division (815), National Institute of Standards & Technology, Boulder, CO 80303. Appointment Expires: 12/31/01.

Dale E. Hall (C), Deputy Director, National Institute of Standards & Technology, Gaithersburg, MD 20899. Appointment Expires: 12/31/01.

Marilia A. Matos (C), Deputy Director for Management Services, Director of Administration and Chief Financial Officer, National Institute of Standards and Technology, Gaithersburg, MD 20899. Appointment Expires: 12/31/01.

Henry Misisco (C), Director, Office of Automotive Affairs, Trade Development, International Trade Administration, Washington, DC 20230. Appointment Expires: 12/31/02.

Alan Neuschatz (C), Deputy Director, National Technical Information Service, Springfield, VA 22161. Appointment Expires: 12/31/01.

Dennis Swyt (C), Chief, Precision Engineering Division, Manufacturing Engineering Laboratory, National Institute of Standards & Technology, Gaithersburg, MD 20899–8210. Appointment Expires: 12/31/02.

Barry N. Taylor (C), Manager, Fundamental Constants Data Center, Physics Laboratory Office, National Institute of Standards & Technology, Gaithersburg, MD 20899. Appointment Expires: 12/31/00.

Cynthia Clark (C), Associate Director for Methodology & Standards, Census Bureau, Washington, DC 20233. Appointment Expires: 12/31/01.

Susan Zevin (C), Deputy Director, Information Technology Laboratory, National Institute of Standards and Technology, Gaithersburg, MD

20899–8900. Appointment Expires: 12/31/02.

Cheryl L. Shavers,

Under Secretary of Commerce for Technology, Technology Administration, Department of Commerce.

[FR Doc. 00–20230 Filed 8–9–00; 8:45 am]

BILLING CODE 3510–18–P

COMMODITY FUTURES TRADING COMMISSION

Membership of the Commission's Performance Review Board

AGENCY: Commodity Futures Trading Commission.

ACTION: Membership Change of Performance Review Board.

SUMMARY: In accordance with the Office of Personnel Management guidance under the Civil Service Reform Act of 1978, notice is given that the following employees will serve as members of the Commission's Performance Review Board.

Members: Donald L. Tendick, Acting Executive Director, Chairman; Andrew Lowenthal, Chief of Staff; Phyllis Cela, Acting Director, Division of Enforcement; John Lawton, Acting Director, Division of Trading and Markets; C. Robert Paul, General Counsel; Richard Shilts, Acting Director, Division of Economic Analysis; Andrea Corcoran, Director, Office of International Affairs; David Merrill, Deputy General Counsel and Madge Bolinger, Acting Deputy Executive Director.

DATES: This Action will be effective on August 10, 2000.

ADDRESSES: Commodity Futures Trading Commission, Office of Human Resources, Three Lafayette Centre, Suite 4100, Washington, DC 20581.

FOR FURTHER INFORMATION CONTACT: Marsha Scialdo, Director, Office of Human Resources, Commodity Futures Trading Commission, Three Lafayette Centre, Suite 4100, Washington, DC 20581, (202) 418–5010.

SUPPLEMENTARY INFORMATION: This action which changes the membership of the Board supersedes the previously published **Federal Register** Notice, August 10, 1999.

Dated: Issued in Washington, DC on August 4, 2000.

Catherine D. Dixon,

Assistant Secretary of the Commission.

[FR Doc. 00–20209 Filed 8–9–00; 8:45 am]

BILLING CODE 6351–01–M

DEPARTMENT OF DEFENSE

Office of the Secretary

Submission for OMB Review; Comment Request

ACTION: Notice.

The Department of Defense has submitted to OMB for clearance, the following proposal for collection of information under the provisions of the Paperwork Reduction Act (44 U.S.C. Chapter 35).

Title, Form Number, and OMB Number: Record of Military Processing, Armed Forces of the United States; DD Form 1966; OMB Number 0704–0173.

Type of Request: Reinstatement.

Number of Respondents: 510,000.

Responses per Respondent: 1.

Annual Responses: 510,000.

Average Burden per Response: 20 minutes.

Annual Burden Hours: 170,000.

Needs and Uses: Title 10 U.S.C. 504, 505, 508, 12102, and 520a, Title 14 U.S.C. 351 and 632, and Title 50 U.S.C., 451, requires applicants to meet standards for enlistment into the Armed Forces. This information collection is the basis for determining eligibility of applicants for enlistment in the Armed Forces and is needed to verify data given by the applicant and to determine his/her qualification of enlistment. The information collected aids in the determination of qualifications, term of service, and grade in which a person, if eligible, will enter active duty or reserve status.

Affected Public: Individuals or Households.

Frequency: On Occasion.

Respondent's Obligation: Required to obtain or retain benefits.

OMB Desk Officer: Mr. Edward C. Springer.

Written comments and recommendations on the proposed information collection should be sent to Mr. Springer at the Office of Management and Budget, Desk Officer for DoD, Room 10236, New Executive Office Building, Washington, DC 20503.

DOD Clearance Officer: Mr. Robert Cushing.

Written requests for copies of the information collection proposal should be sent to Mr. Cushing, WHS/DIOR, 1215 Jefferson Davis Highway, Suite 1204, Arlington, VA 22202–4302.

August 2, 2000.

Patricia L. Toppings,

Alternate OSD Federal Register Liaison Officer, Department of Defense.

[FR Doc. 00–20282 Filed 8–9–00; 8:45 am]

BILLING CODE 5001–10–M

DEPARTMENT OF DEFENSE

Office of the Secretary

Proposed Collection; Comment Request

AGENCY: Office of the Assistant Secretary of Defense for Health Affairs, DoD.

ACTION: Notice.

In accordance with Section 3506(c)(2)(A) of the Paperwork Reduction Act of 1995, the Office of the Assistant Secretary of Defense for Health Affairs announces the proposed extension of a public information collection and seeks public comment on the provisions thereof. Comments are invited on: (a) Whether the proposed extension of collection of information is necessary for the proper performance of the functions of the agency, including whether the information shall have practical utility; (b) the accuracy of the agency's estimate of the burden of the information collection; (c) ways to enhance the quality, utility, and clarity of the information to be collected; and (d) ways to minimize the burden of the information collection on respondents, including through the use of automated collection techniques or other forms of information technology.

DATES: Consideration will be given to all comments received October 10, 2000.

ADDRESSES: Written comments and recommendations on the information collection should be sent to TRICARE Management Activity, Special Contract Operations Office, 16401 E. Centretech Parkway, Attn: Linda Winter, Aurora, CO 80011.

FOR FURTHER INFORMATION CONTACT: To request more information on this proposed information collection, please write to the above address or call TRICARE Management Activity, Special Contract Operations Office, at (303) 676–3682.

Title Associated with Form, and OMB Number: TRICARE Retiree Dental Program Enrollment Form, OMB Number 0720–0015.

Needs and Uses: This information collection is completed by Uniformed Services members entitled to retired pay and their eligible family members who are seeking enrollment in the TRICARE Retiree Dental Program (TRDP). The information is necessary to enable the DoD-contracted third party administrator of the program to identify the program's applicants, determine their eligibility for TRDP enrollment, establish the premium payment amount, and to verify by the applicant's

signature that the applicant understands the benefits and rules of the program.

Affected Public: Individuals or household.

Annual Burden Hours: 12,500.

Number of Respondents: 50,000.

Responses per Respondent: 1.

Average Burden per Response: 15 minutes.

Frequency: Once, at time of initial application.

SUPPLEMENTARY INFORMATION:

Summary of Information Collection

The TRICARE Retiree Dental Program (32 CFR 199.22) was implemented in 1998 based on the authority of 10 U.S.C. 1076c. Dental coverage under the program is available on a voluntary basis to retirees of the Uniformed Services entitled to retired pay and their family members. The initial Notice of Proposed Rule and proposed information collection was published in the **Federal Register** (62 FR 34032) on June 24, 1997. No comments were received concerning the information collection requirements at that time.

The information collection requirements under this proposed extension are similar to those under the current collection. Information on the applicant, such as name, address, telephone numbers, retiree's social security numbers, is necessary for identification purposes, as is information on the family members to be enrolled. The form contains information on premium payment, types of enrollments, and enrollment periods, and a certification statement for the applicant to sign and date. The primary change in the proposed extension of the information collection is the elimination of the requirement for information on the applicant's chosen premium payment methodology if the applicant is not entitled to retired pay (*e.g.*, a surviving spouse). The third party administrator of the program has found it unnecessary to continue the collection of this information on the enrollment form.

Dated: August 2, 2000.

Patricia L. Toppings,

Alternate OSD Federal Register Liaison Officer, Department of Defense.

[FR Doc. 00–20283 Filed 8–9–00; 8:45 am]

BILLING CODE 5001–10–M

DEPARTMENT OF DEFENSE

Office of the Secretary

Submission for OMB Review; Comment Request

ACTION: Notice.

The Department of Defense has submitted to OMB for clearance, the following proposal for collection of information under the provisions of the Paperwork Reduction Act (44 U.S.C. Chapter 35).

Title, Form Numbers, and OMB Number: Telecommunications Service Priority System; SF Form(s) 314, 315, 317, 318, and 319; OMB Number 0704–0305.

Type of Request: Extension.

Number of Respondents: 94.

Responses per Respondent: 42 (average).

Annual Responses: 3,940.

Average Burden per Response: 1.2 hours.

Annual Burden Hours: 4,815.

Needs and Uses: The Telecommunications Service Priority (TSP) System forms are used to determine participation in the TSP system, facilitate TSP system administrative requirements, and to maintain TSP system database accuracy. The purpose of the TSP system is to provide a legal basis for telecommunications vendors to provide priority provisioning and restoration of telecommunications services supporting national security or emergency preparedness functions. The information gathered via the TSP system forms is the minimum necessary for the National Communications System to effectively manage the TSP system.

Affected Public: Businesses or Other For-Profit; State, Local, or Tribal Government.

Frequency: On Occasion.

Respondents Obligation: Required to obtain or retain benefits.

OMB Desk Officer: Mr. Edward C. Springer.

Written comments and recommendations on the proposed information collection should be sent to Mr. Springer at the Office of Management and Budget, Desk Officer for DoD, Room 10236, New Executive Office Building, Washington, DC 20503.

DOD Clearance Officer: Mr. Robert Cushing.

Written requests for copies of the information collection proposal should be sent to Mr. Cushing, WHS/DIOR, 1215 Jefferson Davis Highway, Suite 1204, Arlington, VA 22202–4302.

Dated: August 2, 2000.

Patricia L. Toppings,

Alternate OSD Federal Register Liaison Officer, Department of Defense.

[FR Doc. 00–20189 Filed 8–9–00; 8:45 am]

BILLING CODE 5001–10–M

DEPARTMENT OF DEFENSE

Office of the Secretary

Meeting of the DoD Healthcare Quality Initiative Review Panel

AGENCY: Department of Defense.

ACTION: An executive/administration meeting for DOD Healthcare Quality Initiatives Review Panel has been scheduled for August 9 & 10, 2000.

SUMMARY: This notice set forth the meeting of the DoD Healthcare Quality Initiatives Review Panel. Notice of meeting is required under The Federal Advisory Committee Act.

DATES: August 9 & 10, 2000.

ADDRESSES: Sheraton Crystal City, 1800 Jefferson Davis Hwy., Arlington, VA 22202.

TIME: August 9th, 5 p.m. to 8:30 p.m.; August 10th, 8 a.m. to 5:30 p.m.

FOR FURTHER INFORMATION: For information please contact Gia Edmonds at (703) 933–8325.

Special Notice

Due to a last minute call to Jury Duty, FAC/HQIRP Chairman, Dr. Al Buck will not be present to preside over the August 9–10, 2000, meeting. This information was forwarded on July 31, 2000 to the FAC office for a determination if the meeting required cancellation. The determination is that Dr. Buck may designate the existing Designated Federal Officer (DFO) to both convene and chair the meeting. Upon notification from the FAC headquarters office on August 1, 2000, this notice is posted on August 2, 2000 with apologies for it being late due to the circumstances noted above.

August 3, 2000.

L.M. Bynum,

Alternate OSD Federal Register Liaison Officer, Department of Defense.

[FR Doc. 00–20190 Filed 8–9–00; 8:45 am]

BILLING CODE 5001–10–M

DEPARTMENT OF EDUCATION

Submission for OMB Review; Comment Request

AGENCY: Department of Education.

SUMMARY: The Leader, Regulatory Information Management Group, Office

of the Chief Information Officer invites comments on the submission for OMB review as required by the Paperwork Reduction Act of 1995.

DATES: Interested persons are invited to submit comments on or before September 11, 2000.

ADDRESSES: Written comments should be addressed to the Office of Information and Regulatory Affairs, Attention: Wai-Sinn Chan, Acting Desk Officer, Department of Education, Office of Management and Budget, 725 17th Street, NW., Room 10235, New Executive Office Building, Washington, DC 20503 or should be electronically mailed to the internet address Wai-Sinn__L.__Chan@omb.eop.gov.

SUPPLEMENTARY INFORMATION: Section 3506 of the Paperwork Reduction Act of 1995 (44 U.S.C. Chapter 35) requires that the Office of Management and Budget (OMB) provide interested Federal agencies and the public an early opportunity to comment on information collection requests. OMB may amend or waive the requirement for public consultation to the extent that public participation in the approval process would defeat the purpose of the information collection, violate State or Federal law, or substantially interfere with any agency's ability to perform its statutory obligations. The Leader, Regulatory Information Management Group, Office of the Chief Information Officer, publishes that notice containing proposed information collection requests prior to submission of these requests to OMB. Each proposed information collection, grouped by office, contains the following: (1) Type of review requested, e.g. new, revision, extension, existing or reinstatement; (2) Title; (3) Summary of the collection; (4) Description of the need for, and proposed use of, the information; (5) Respondents and frequency of collection; and (6) Reporting and/or Recordkeeping burden. OMB invites public comment.

Dated: August 4, 2000.

John Tressler, Leader,

Regulatory Information Management, Office of the Chief Information Office.

Officer of Student Financial Assistance Programs

Type of Review: Revision.

Title: Student Aid Report (SAR).

Frequency: Annually.

Affected Public: Individuals or households.

Reporting and Recordkeeping Hour Burden: Responses: 10,721,049; Burden Hours: 4,386,515.

Abstract: The Student Aid Report (SAR) is used to notify all applicants of their eligibility to receive Federal student aid for postsecondary education. The form is submitted by the applicant to the institution of their choice.

Requests for copies of the proposed information collection request may be accessed from *http://edicsweb.ed.gov,* or should be addressed to Vivian Reese, Department of Education, 400 Maryland Avenue, SW, Room 4050, Regional Office Building 3, Washington, DC 20202–4651. Requests may also be electronically mailed to the internet address OCIO__IMG__Issues@ed.gov or faxed to 202–708–9346. Please specify the complete title of the information collection when making your request. Comments regarding burden and/or the collection activity requirements should be directed to Joseph Schubart at (202) 708–9266 or via his internet address Joe—Schubart@ed.gov. Individuals who use a telecommunications device for the deaf (TDD) may call the Federal Information Relay Service (FIRS) at 1–800–877–8339.

[FR Doc. 00–20214 Filed 8–9–00; 8:45 am]

BILLING CODE 4000–01–P

DEPARTMENT OF EDUCATION

[CFDA No.: 84.153A]

Office of Postsecondary Education, Business and International Education Program; Notice Inviting Applications for New Awards for Fiscal Year (FY) 2001

Purpose of Program: The Business and International Education Program provides grants to institutions of higher education to enhance international business education programs and to expand the capacity of the business community to engage in international economic activities.

Eligible Applicants: Institutions of higher education that enter into agreements with trade associations, business enterprises or trade organizations that are engaged in international economic activity.

Deadline for Transmittal of Applications: November 3, 2000.

Deadline for Intergovernmental Review: January 2, 2001.

Applications Available: September 1, 2000.

Available Funds: $2,000,000. The estimated amount of funds available for new awards under this competition is based on the Administration's request for this program for FY 2001. The actual level of funding, if any, is contingent on final congressional action.

Estimated Range of Awards: $50,000–$95,000.

Estimated Average Size of Awards: $76,938 per year.

Estimated Number of Awards: 26.

Note: The Department is not bound by any estimates in this notice.

Project Period: Up to 24 months.

Applicable Regulations: (a) The Education Department General Administrative Regulations (EDGAR) in 34 CFR parts 74, 75, 77, 79, 82, 85, 86, 97, 98, and 99; and (b) the regulations for this program in 34 CFR parts 655 and 661.

SUPPLEMENTARY INFORMATION: Matching requirement: Under Title VI, Part B, section 613(d) of the Higher Education Act of 1965, as amended, Business and International Education Program grantees must provide no less than 50 percent of the total cost of projects in each fiscal year. Example: The institution's total costs of the proposed project will be $140,000 per year. The institution may request a grant in the amount of $70,000 or less. The institution must provide the remaining $70,000 in cash or in-kind contributions.

Priorities

Invitational Priority: The Secretary is particularly interested in applications that meet the following invitational priority. However, under 34 CFR 75.105(c)(1) an application that meets this invitational priority does not receive competitive preference over other applications.

Applications from institutions of higher education that propose educational programs abroad, including pre-departure and post-return programs, for undergraduate and graduate students to study or intern, or both, in a foreign country for a semester or more. These programs should be integrated into the curriculum of the home institution or institutions.

For Applications or Information Contact: Tanyelle Richardson, Business and International Education Program, U.S. Department of Education, International Education and Graduate Programs Service, 1990 K Street, NW, Suite 600, Washington, DC 20006–8521. Telephone: 202–502–7626. The e-mail address for Ms. Richardson is: tanyelle__richardson@ed.gov

Individuals who use a telecommunications device for the deaf (TDD) may call the Federal Information Relay Service (FIRS) at 1–800–877–8339.

Individuals with disabilities may obtain this document in an alternate format (e.g., Braille, large print, audiotape, or computer diskette) on request to the appropriate contact

person listed in the preceding paragraph. However, the Department is not able to reproduce in an alternate format the standard forms included in the application package.

Electronic Access to This Document

You may view this document, as well as all other Department of Education documents published in the **Federal Register**, in text or Portable Document Format (PDF) on the Internet at either of the following sites:

http://ocfo.ed.gov/fedreg.htm
http://www.ed.gov/news.html

To use PDF you must have Adobe Acrobat Reader which is available free at either of the previous sites. If you have any questions about using the PDF, call the U.S. Government Printing Office (GPO) toll free, at 1–888–293–6498; or in the Washington, D.C. area, at (202) 512–1530.

Note: The official version of this document is the document published in the **Federal Register**. Free Internet access to the official edition of the **Federal Register** and the Code of Federal Regulations is available on GPO Access at: http://www.access.gpo.gov/nara/index.html

Program Authority: 20 U.S.C. 1130a–1130b.

Dated: August 4, 2000.

A. Lee Fritschler,

Assistant Secretary Office of Postsecondary Education.

[FR Doc. 00–20232 Filed 8–9–00; 8:45 am]

BILLING CODE 4000–01–P

DEPARTMENT OF EDUCATION

[CFDA No.: 84.016A]

Office of Postsecondary Education, Undergraduate International Studies and Foreign Language Program; Notice Inviting Applications for New Awards for Fiscal Year (FY) 2001

Purpose of Program: The Undergraduate International Studies and Foreign Language Program provides grants to strengthen and improve undergraduate instruction in international studies and foreign languages in the United States.

Eligible Applicants: Institutions of higher education; combinations of institutions of higher education; partnerships between nonprofit educational organizations and institutions of higher education; and public and private non-profit agencies and organizations, including professional and scholarly associations.

Deadline for Transmittal of Applications: November 3, 2000.

Deadline for Intergovernmental Review: January 2, 2001.

Applications Available: September 1, 2000.

Available Funds: $2,013,000. The estimated amount of funds available for new awards under this competition is based on the Administration's request for this program for FY 2001. The actual level of funding, if any, is contingent on final congressional action.

Estimated Range of Awards: $40,000–$130,000.

Estimated Average Size of Awards: $74,563 per year.

Estimated Number of Awards: 27.

Note: The Department is not bound by any estimates in this notice.

Project Period: Up to 24 months for grants to single institutions of higher education, and up to 36 months for grants to combinations of institutions of higher education and partnerships.

Applicable Regulations: (a) The Education Department General Administrative Regulations (EDGAR) in 34 CFR parts 74, 75, 77, 79, 82, 85, and 86, 97, 98, 99; and (b) the regulations in 34 CFR parts 655 and 658.

SUPPLEMENTARY INFORMATION: Matching requirement: Under Title VI, Part A, section 604(a)(3) of the Higher Education Act of 1965, Undergraduate International Studies and Foreign Language grantees must provide matching funds in either of the following ways: (a) cash contributions from the private sector equal to one-third of the total project costs; or (b) a combination of institutional and non-institutional cash or in-kind contributions equal to one-half of the total project costs. The Secretary may waive or reduce the required matching share for institutions that are eligible to receive assistance under part A or part B of Title III or under Title V of the Higher Education Act of 1965, as amended.

Priorities

Competitive Priority: Under 34 CFR 75.105(c)(2)(i), 34 CFR 658.35, and section 604(a)(5) of Title VI of the Higher Education Act of 1965, as amended, the Secretary gives preference to applications that meet the following competitive priority. The Secretary awards five points to an application that meets this competitive priority. These points are in addition to any points the application earns under the selection criteria:

Applications from institutions of higher education or combinations of institutions that: (a) Require entering students to have successfully completed at least two years of secondary school foreign language instruction; (b) require each graduating student to earn two years of postsecondary credit in a foreign language or have demonstrated equivalent competence in the foreign language; or (c) in the case of a two-year degree granting institution, offer two years of postsecondary credit in a foreign language.

Invitational Priority: The Secretary is particularly interested in applications that meet the following invitational priority. However under 34 CFR 75.105(c)(1) an application that meets this invitational priority does not receive competitive preference over other applications.

Applications from institutions of higher education that propose activities that enrich or enhance the effectiveness of educational programs abroad, including pre-departure and post-return programs, and integrate education programs abroad into the curriculum of the home institution.

For Applications or Information Contact: Christine Corey, Undergraduate International Studies and Foreign Language Program, U.S. Department of Education, International Education and Graduate Programs Service, 1990 K Street, NW, Suite 600, Washington, DC 20006–8521. Telephone: 202–502–7629. The e-mail address for Ms. Corey is: christine__corey@ed.gov

Individuals who use a telecommunications device for the deaf (TDD) may call the Federal Relay Service (FRS) at 1–800–877–8339.

Individuals with disabilities may obtain this document in an alternate format (e.g., Braille, large print, audiotape, or computer diskette) on request to the contact person listed in the preceding paragraph. However, the Department is not able to reproduce in an alternate format the standard forms included in the application package.

Electronic Access To This Document

You may view this document, as well as all other Department of Education documents published in the **Federal Register**, in text or Portable Document Format (PDF) on the Internet at either of the following sites:

http://ocfo.ed.gov/fedreg.htm
http://www.ed.gov/news.html

To use the PDF you must have Adobe Acrobat Reader, which is available free at either of the previous sites. If you have any questions about using the PDF, call the U.S. Government Printing Office (GPO) toll free, at 1–888–293–6498; or in the Washington, D.C. area, at (202) 512–1530.

Note: The official version of this document is the document published in the **Federal**

Register. Free Internet access to the official edition of the **Federal Register** and the Code of Federal Regulations is available on GPO Access at: http://www.access.gpo.gov/nara/index.html

Program Authority: 20 U.S.C. 1124.

Dated: August 4, 2000.

A. Lee Fritschler,

Assistant Secretary, Office of Postsecondary Education.

[FR Doc. 00–20233 Filed 8–9–00; 8:45 am]

BILLING CODE 4000–01–P

DEPARTMENT OF EDUCATION

[CFDA No.: 84.019A, 84.021A, 84.022A]

Office of Postsecondary Education, Fulbright-Hays Faculty Research Abroad Fellowship Program, Fulbright-Hays Group Projects Abroad Program, and Fulbright-Hays Doctoral Dissertation Research Abroad Fellowship Program; Notice Inviting Applications for New Awards for Fiscal Year (FY) 2001

Purpose of Programs: (a) The Faculty Research Abroad Fellowship Program offers opportunities to faculty members of institutions of higher education for research and study in modern foreign languages and area studies.

(b) The Group Projects Abroad Program supports overseas projects in training, research, and curriculum development in modern foreign languages and area studies for groups of teachers, students, and faculty engaged in a common endeavor. Projects may include short-term seminars, curriculum development or group research or study. The program does not support advanced intensive language projects under this competition.

(c) The Doctoral Dissertation Research Abroad Fellowship Program provides opportunities for graduate students to engage in full-time dissertation research abroad in modern foreign languages and area studies.

Eligible Applicants: (a) Institutions of higher education are eligible to participate in the Faculty Research Abroad Fellowship Program and the Doctoral Dissertation Research Abroad Fellowship Program.

(b) Institutions of higher education, State departments of education, nonprofit private educational organizations, and consortia of these entities are eligible to participate in the Group Projects Abroad Program.

Deadline for Transmittal of Applications: The dates of availability of applications and the deadlines for the transmittal of applications under each of these competitions are indicated in the chart in this notice.

Available Funds: The estimated amount of funds available for new awards under these competitions, as shown in the chart, is based on the Administration's request for these programs for FY 2001. The actual level of funding, if any, is contingent on final congressional action.

CFDA number and name of program	Applications available	Deadline for transmittal of applications	Estimated range of awards	Estimated average size of awards	Estimated number of award	Project period
84.019A—Fulbright-Hays Faculty Research Abroad Fellowship Program.	August 28, 2000 ..	October 27, 2000	$20,000–$75,000	$47,000	30 fellow ships	3–12 months.
84.021A—Fulbright-Hays Group Projects Abroad Program.	September 1, 2000.	October 23, 2000	$30,000–$75,000	$69,000	36	4–6 weeks for short-term seminars and curriculum development projects. 2–12 months for group research or study projects.
84.022A—Fulbright-Hays Doctoral Dissertation Research Abroad Fellowship Program.	August 28, 2000 ..	October 27, 2000	$10,000–$70,000	$27,000	115 fellow ships ..	6–12 months.

Note: The Department is not bound by any estimates in this notice.

Applicable Regulations: (a) The Education Department General Administrative Regulations (EDGAR) in 34 CFR parts 74, 75, 77, 80, 81, 82, 85, 86, 97, 98, and 99; and (b) the regulations for these programs as follows: 34 CFR Part 662 governing the Doctoral Dissertation Research Abroad Fellowship Program; 34 CFR Part 663 governing the Faculty Research Abroad Fellowship Program; and 34 CFR Part 664 governing the Group Projects Abroad Program.

Priorities

Fulbright-Hays Faculty Research Abroad Fellowship Program and Fulbright-Hays Doctoral Dissertation Research Abroad Fellowship Program

Absolute Priority: Under 34 CFR 105(c)(3) and 34 CFR 662.21(d) governing the Fulbright-Hays Doctoral Dissertation Research Abroad Fellowship Program and 34 CFR 105(c)(3) and 34 CFR 663.21(d) governing the Fulbright-Hays Faculty Research Abroad Fellowship Program, the Secretary gives an absolute preference to applications that meet the following priority. The Secretary funds only applications that meet this absolute priority:

A research project funded under this priority must focus on one or more of the following areas: Africa, East Asia, Southeast Asia and the Pacific, South Asia, the Near East, East Central Europe

and Eurasia, and the Western Hemisphere (Canada, Central and South America, Mexico, and the Caribbean). Please note that applications that propose projects focused on Western Europe will not be funded.

Group Projects Abroad Program

Absolute Priority: Under 34 CFR 105(c)(3) and 34 CFR 664.34 governing the Fulbright-Hays Group Projects Abroad Program, the Secretary gives an absolute preference to applications that meet the following priority. The Secretary funds only applications that meet this absolute priority:

A group project funded under this priority must focus on one or more of the following areas: Africa, East Asia, South Asia, Southeast Asia and the Pacific, the Western Hemisphere (Central and South America, Mexico, and the Caribbean), East Central Europe and Eurasia, and the Near East. Please note that applications that propose projects focused on Canada or Western Europe will not be funded.

Competitive Priority: Within the absolute priority specified in this notice for the Group Projects Abroad Program, the Secretary gives preference to applications that meet the following competitive priority. Under 34 CFR 75.105(c)(2)(i) and 34 CFR 664.30(b), the Secretary awards up to five points to an application depending upon how well the application meets the priority. These points are in addition to any points the application earns under the selection criteria for the program.

Short-term seminars that develop and improve foreign language and area studies at elementary and secondary schools.

Invitational Priority: Within the absolute priority specified in this notice, the Secretary is particularly interested in applications that meet the following invitational priority. However under 34 CFR 75.105(c)(1) an application that meets this invitational priority does not receive competitive preference over other applications.

Group study projects that provide opportunities for nationally recruited undergraduate students to study in a foreign country for either a semester or a full academic year.

For Applications or Information Contact: Applications for all the programs are available at www.ed.gov/offices/OPE/HEP/iegps/

Faculty Research Abroad Program: Eliza Washington, U.S. Department of Education, International Education and Graduate Programs Service, 1990 K Street, NW, 6th Floor, Washington, DC 20006–8521. Telephone: (202) 502–7633. The e-mail address for Ms. Washington is: eliza__washington@ed.gov

Group Projects Abroad: Lungching Chiao, U.S. Department of Education, International Education and Graduate Programs Service, 1990 K Street, NW, 6th Floor, Washington, DC 20006–8521. Telephone: (202) 502–7624. The e-mail address for Ms. Chiao is: lungching__chiao@ed.gov

Doctoral Dissertation Research Abroad Program: Karla Ver Bryck Block, U.S. Department of Education, International Education and Graduate Programs Service, 1990 K Street, NW, 6th Floor, Washington, DC 20006–8521. Telephone: (202) 502–7632. The e-mail address for Ms. Ver Bryck Block is: karla__verbryckblock@ed.gov

Individuals who use a telecommunications device for the deaf (TDD) may call the Federal Information Relay Service (FIRS) at 1–800–877–8339.

Individuals with disabilities may obtain this document in an alternate format (e.g., Braille, large print, audiotape, or computer diskette) on request to the appropriate contact persons listed in the preceding paragraphs. However, the Department is not able to reproduce in an alternate format the standard forms included in the application package.

Electronic Access to This Document

You may view this document, as well as all other Department of Education documents published in the **Federal Register**, in text or Portable Document Format (PDF) on the Internet at either of the following sites:
http://ocfo.ed.gov/fedreg.htm
http://www.ed.gov/news.html

To use PDF you must have Adobe Acrobat Reader which is available free at either of the previous sites. If you have any questions about using the PDF, call the U.S. Government Printing Office (GPO) toll free, at 1–888–293–6498; or in the Washington, D.C. area, at (202) 512–1530.

Note: The official version of a document is the document published in the **Federal Register**. Free Internet access to the official edition of the **Federal Register** and the Code of Federal Regulations is available on GPO Access at:http://www.access.gpo.gov/nara/index.html

Program Authority: 22 U.S.C. 2452(b)(6).

Dated: August 4, 2000.

A. Lee Fritschler,

Assistant Secretary, Office of Postsecondary Education.

[FR Doc. 00–20234 Filed 8–9–00; 8:45 am]

BILLING CODE 4000–01–P

DEPARTMENT OF EDUCATION

Office of Management; Performance Review Board; Membership

AGENCY: Department of Education.

ACTION: Notice of Membership of the Performance Review Board (PRB).

SUMMARY: The Secretary announces the names of members of the PRB for the Department of Education. Under 5 U.S.C. 4314(c) (1) through (5), each agency is required to establish one or more Senior Executive Service (SES) PRBs. The PRB reviews and evaluates the initial appraisal of a senior executive's performance along with any comments by senior executives and any higher level executive and makes recommendations to the appointing authority relative to the performance of the senior executive, including making recommendations on performance awards. The PRB also makes recommendations on SES pay level adjustments and recertification.

Membership

The following executives of the Department of Education have been selected to serve on the Performance Review Board of the Department of Education: Willie H. Gilmore, Chair, Judith A. Winston, Co-chair, Philip Link, Thomas Skelly, Ricky Takai, Linda A. Stracke, Danny Harris, Susan Bowers, John Higgins, Steven Winnick, Patricia Guard, Arthur Cole, Mary Jean LeTendre, Robert Belle, Maureen McLaughlin, Sue Betka, Peirce Hammond, Dennis Berry, James Lynch, Linda Paulsen, Claudio Prieto, Katherine Seelman, Carol Rasco, Linda Roberts, Raymond Pierce, Claudia Withers. The following executives have been selected to serve as alternate members of the PRB: Carol Cichowski, John Klenk, Art Love, Craig Luigart, Judith Johnson, Curtis Richards.

FOR FURTHER INFORMATION CONTACT: Althea Watson, Director, Executive Resources Team, Human Resources Group, Office of Management, Department of Education, Room 2E124, FOB–6, 400 Maryland Avenue, SW, Washington, DC 20202, Telephone: (202) 401–0546. If you use a telecommunications device for the deaf (TDD), you may call the Federal Information Relay Service (FIRS) at 1–800–877–8339.

Individuals with disabilities may obtain this document in an alternate format (e.g., Braille, large print, audiotape, or computer diskette) on request to the contact person listed in the preceding paragraph.

Electronic Access to This Document

You may view this document, as well as all other Department of Education documents published in the **Federal Register**, in text or portable document format (PDF) on the internet at the following sites:

http://ocfo.ed.gov/fedreg.htm
http://www.ed.gov/news.html

To use PDF you must have the Adobe Acrobat Reader, which is available free at either of the previous sites. If you have questions about using PDF, call the U.S. Government Printing Office, toll free, at 1–888–293–6498; or in the Washington, D.C. area at (202)–512–1530.

Note: The official version of this document is the document published in the **Federal Register**. Free internet access to the official edition of the **Federal Register** and the Code of Federal Regulations is available on GPO Access at:

http://www.access.gpo.gov/nara/index.html.

Dated: August 4, 2000.

Richard W. Riley,

Secretary of Education.

[FR Doc. 00–20327 Filed 8–9–00; 8:45 am]

BILLING CODE 4000–01–P

DEPARTMENT OF ENERGY

Federal Energy Regulatory Commission

[Docket No. CP00–416–000]

Columbia Gas Transmission Corporation; Notice of Application

August 4, 2000.

Take notice that on July 26, 2000, Columbia Gas Transmission Corporation (Columbia), Post Office Box 10146, Fairfax, Virginia 22030–0146, filed in Docket No. CP00–416–000 an application pursuant to Section 7(b) of the Natural Gas Act for permission and approval to abandon certain pipeline facilities located in Ohio, all as more fully set forth in the application on file with the Commission and open to public inspection. This filing may be viewed on the web at http://www.ferc.fed.us/online/htm (call 202–208–2222 for assistance).

Columbia proposes to abandon the facilities by sale to Columbia Natural Resources, Inc. (CNR) and states that the facilities proposed for abandonment include Columbia's Line SR–545, which is a 20-inch pipeline beginning at a point near Columbia's Benton Compressor Station in Benton Township, Hocking County, Ohio and running approximately 16.3 miles in a northeasterly direction to its terminus at a point near Columbia's Crawford Compressor Station in the township of Berne, Fairfield County, Ohio. It is stated that the facilities have been used by Columbia primarily to transport volumes of gas from Columbia's Benton Storage Field to its Crawford Compressor Station where the volumes are compressed and transported to Columbia's mainline transmission system for system supply and redelivery to the Columbus, Ohio, market.

It is explained that operation of the system has changed so that the volumes previously compressed at Crawford are now compressed at Benton; therefore, Line SR–545 is no longer necessary to Columbia's current operations. It is asserted that the facilities will be sold for their depreciated book cost, estimated to be $290,390 as of December 31, 1999. Columbia states that the facilities are no longer an integral part of its transmission system and that the long-term needs of its customers will be best served through a divestiture of the non-core facilities.

Columbia also proposes to abandon service to mainline tap customers located along Line SR–545 and to terminate interruptible service agreements with CNR and Oxford Oil Company. It is asserted that CNR has agreed to continue providing service to those customers abandoned by Columbia, so that no customer would lose service as a result of the proposed abandonment. CNR has filed in Docket No. CP00–417–000 a request for declaratory order exempting the facilities from Commission jurisdiction.

Any questions regarding the application should be directed to Steven E. Hellman, Senior Attorney, at (703) 227–3467.

Any person desiring to be heard or to make any protest with reference to said application should on or before August 25, 2000, file with the Federal Energy Regulatory Commission, 888 First Street, N.E., Washington, D.C. 20426, a motion to intervene or a protest in accordance with the requirements of the Commission's Rules of Practice and Procedure (18 CFR 385.214 or 385.211) and the Regulations under the Natural Gas Act (18 CFR 157.10). All protests filed with the Commission will be considered by it in determining the appropriate action to be taken but will not serve to make protestants parties to the proceedings. Any person wishing to become a party to a proceeding or to participate as a party in any hearing therein must file a motion to intervene in accordance with the Commission's Rules.

Take further notice that, pursuant to the authority contained in and subject to the jurisdiction conferred upon the Federal Regulatory Commission by Sections 7 and 15 of the Natural Gas Act and the Commission's Rules of Practice and Procedure, a hearing will be held without further notice before the Commission or its designee on this application if no motion to intervene is filed within the time required herein, if the Commission on its own review of the matter finds that a grant of the certificate is required by the public convenience and necessity. If a motion for leave to intervene is timely filed, or if the Commission on its own motion believes that a formal hearing is required, further notice of such hearing will be duly given.

Under the procedure herein provided for, unless otherwise advised, it will be unnecessary for Columbia to appear or be represented at the hearing.

David P. Boergers,

Secretary.

[FR Doc. 00–20264 Filed 8–9–00; 8:45 am]

BILLING CODE 6717–01–M

DEPARTMENT OF ENERGY

Federal Energy Regulatory Commission

[Docket No. CP00–417–000]

Columbia Natural Resources, Inc.; Notice of Petition for Declaratory Order

August 4, 2000.

Take notice that on July 26, 2000, Columbia Natural Resources, Inc. (CNR), P.O. Box 6070, Charleston, West Virginia 25362–0070, filed in Docket No. CP00–417–000 a petition pursuant to section 1(b) of the Natural Gas Act (NGA) for a declaratory order exempting facilities to be acquired from Columbia Gas Transmission Corporation (Columbia) from Commission regulation under the NGA, as more fully set forth in the application which is on file with the Commission and open to public inspection. This filing may be viewed on the web at http://www.ferc.fed.us/online/htm (call 202–208–2222 for assistance).

CNR proposes to purchase from Columbia facilities consisting of approximately 16.3 miles of 20-inch pipeline located in Hocking and Fairfield Counties, Ohio, for use in CNR's gathering operations. Columbia has filed an application to abandon the facilities by sale to CNR in Docket No. CP00–416–000. It is asserted that Columbia has been using the facilities for gathering gas on behalf of local

producers and making deliveries to customers. It is further asserted that CNR will continue to use the facilities to gather gas and will provide substitute nonjurisdictional alternatives to the service provided by Columbia. It is explained that CNR is not a natural gas company subject to the Commission's jurisdiction and that the facilities meet the Commission's criteria for a finding of a nonjurisdictional gathering function.

Any questions regarding the application may be directed to Jo Ellen Diehl Yeary, Counsel and Assistant Secretary, at (304) 353–5166.

Any person desiring to be heard or to make any protest with reference to said application should, on or before August 25, 2000, file with the Federal Energy Regulatory Commission, 888 First Street, NE., Washington, DC 20426, a motion to intervene or a protest in accordance with the requirements of the Commission's Rules of Practice and Procedure (18 CFR 385.214 or 385.211) and the Regulations under the NGA. All protests filed with the Commission will be considered by it in determining the appropriate action to be taken but will not serve to make the protestants parties to the proceeding. Any person wishing to become a party to a proceeding or to participate as a party in any hearing therein must file a motion to intervene in accordance with the Commission's Rules.

David P. Boergers,

Secretary.

[FR Doc. 00–20265 Filed 8–9–00; 8:45 am]

BILLING CODE 6717–01–M

DEPARTMENT OF ENERGY

Federal Energy Regulatory Commission

[Docket No. RP97–287–053]

El Paso Natural Gas Company; Notice of Proposed Changes in FERC Gas Tariff

August 4, 2000.

Take notice that on July 31, 2000, El Paso Natural Gas Company (El Paso) tendered for filing and acceptance by the Federal Energy Regulatory Commission (Commission) the following tariff sheet to its FERC Gas Tariff, Second Revised Volume No. 1–A, to become effective August 1, 2000:

Thirty-Second Revised Sheet No. 30

El Paso states that the above tariff sheet is being filed to implement a negotiated rate contract pursuant to the Commission's Statement of Policy on Alternatives to Traditional Cost-of-Service Ratemaking for Natural Gas Pipelines and Regulation of Negotiated Transportation Services of Natural Gas Pipelines issued January 31, 1996 at Docket Nos. RM95–6–000 and RM96–7–000.

Any person desiring to protest this filing should file a protest with the Federal Energy Regulatory Commission, 888 First Street, NE., Washington, DC 20426, in accordance with section 385.211 of the Commission's Rules and Regulations. All such protests must be filed as provided in section 154.210 of the Commission's Regulations. Protests will be considered by the Commission in determining the appropriate action to be taken, but will not serve to make protestants parties to the proceedings. Copies of this filing are on file with the Commission and are available for public inspection in the Public Reference Room. This filing may be viewed on the web at http://www.ferc.fed.us/online/rims.htm (call 202–208–2222 for assistance).

David P. Boergers,

Secretary.

[FR Doc. 00–20205 Filed 8–9–00; 8:45 am]

BILLING CODE 6717–01–M

DEPARTMENT OF ENERGY

Federal Energy Regulatory Commission

[Docket No. RP00–298–003]

Kern River Gas Transmission Company; Notice of Compliance Filing

August 4, 2000.

Take notice that on July 31, 2000, Kern River Gas Transmission Company (Kern River) tendered for filing as part of its FERC Gas Tariff, Second Revised Volume No. 1, the following tariff sheets, to be effective August 31, 2000.

Second Revised Sheet No. 15
Second Revised Sheet No. 71
Second Revised Sheet No. 171
Original Sheet No. 186
Sheet Nos. 187–299 (Reserved)
Original Sheet Nos. 423–426
Sheet Nos. 427–499 (Reserved)
Second Revised Sheet No. 501
Second Revised Sheet No. 601
Second Revised Sheet No. 701
Second Revised Sheet No. 901

Kern River states that the purpose of this filing is to comply with the Commission's Order directing Kern River to file actual tariff sheets, consistent with the pro forma sheets filed in this proceeding on June 19, 2000, in order to implement its extended-term (ET) rate proposal.

Kern River states that it has served a copy of this filing upon each person designated on the official service list compiled by the Secretary in this proceeding.

Any person desiring to protest this filing should file a protest with the Federal Energy Regulatory Commission, 888 First Street, NE., Washington, DC 20426, in accordance with section 385.211 of the Commission's Rules and Regulations. All such protests must be filed as provided in section 154.210 of the Commissions Regulations. Protests will be considered by the Commission in determining the appropriate action to be taken, but will not serve to make protestants parties to the proceedings. Copies of this filing are on file with the Commission and are available for public inspection in the Public Reference Room. This filing may be viewed on the web at http://www.ferc.fed.us/online/rims.htm (call 202–208–2222 for assistance).

David P. Boergers,

Secretary.

[FR Doc. 00–20203 Filed 8–9–00; 8:45 am]

BILLING CODE 6717–01–M

DEPARTMENT OF ENERGY

Federal Energy Regulatory Commission

[Docket No. MG00–9–000]

Michigan Gas Storage Company; Notice of Filing

August 4, 2000.

Take notice that on July 25, 2000, Michigan Gas Storage Company filed revised standards of conduct under Order Nos. 497 *et seq.*[1] Order Nos. 566 *et seq.,* [2] and Order No. 599.[3]

---

[1] Order No. 497, 53 FR 22139 (June 14, 1988), FERC Stats. & Regs. 1986–1990 ¶ 30,820 (1988); Order No. 497–A, *order on rehearing,* 54 FR 52781 (December 22, 1989), FERC Stats. & Regs. 1986–1990 ¶ 30,868 (1989); Order No. 497–B, *order extending sunset date,* 55 FR 53291 (December 28, 1990), FERC Stats. & Regs. 1986–1900 ¶ 30,908 (1990); Order No. 497–C, *order extending sunset date,* 57 FR 9 (January 2, 1992), FERC Stats. & Regs. 1991–1996 ¶ 30,934 (1991), *rehearing denied,* 57 FR 5815 (February 18, 1992), 58 FERC ¶ 61,139 (1992); Tenneco Gas v. FERC (affirmed in part and remanded in part), 969 F.2d 1187 (D.C. Cir. 1992); Order No. 197–D, *order on remand and extending sunset date,* 57 FR 58978 (December 14, 1992), FERC Stats. & Regs. 1991–1996 ¶ 30,958 (December 4, 1992); Order No. 497–E, *order on rehearing and extending sunset date,* 59 FR 243 (January 4, 1994), FERC Stats. & Regs. 1991–1996 ¶ 30,987 (December 23, 1993); Order No. 497–F, *order denying rehearing and granting clarification,* 59 FR 15336 (April 1, 1994), 66 FERC ¶ 61,347 (March 24, 1994); and Order No. 497–G, *order extending sunset date,* 59 FR 32884 (June 27, 1994), FERC Stats. & Regs. 1991–1996 ¶30,996 (June 17, 1994).

[2] Standards of Conduct and Reporting Requirements for Transportation and Affiliate Transactions, Order No. 566, 59 FR 32885 (June 27, 1994), FERC Stats. & Regs. 1991–1996 ¶ 30,997 (June 17, 1994); Order No. 566–A, *order on rehearing,* 59 FR 52896 (October 20, 1994), 69 FERC ¶ 61,044 (October 14, 1994); Order No. 566–B *order on rehearing.* 59 FR 65707 (December 21, 1994), 69 FERC ¶ 61,334 (December 14, 1994).

[3] Reporting Interstate Natural Gas Pipeline Marketing Affiliates on the Internet, Order No. 599, 63 FR 43075 (August 12, 1998), FERC Stats. & Regs. 31,064 (1998).

Any person desiring to be heard or to protest said filing should file a motion to intervene or protest in this proceeding with the Federal Energy Regulatory Commission, 888 First Street, NE. Washington, DC 20426, in accordance with Rules 211 or 214 of the Commission's Rules of Practice and Procedure (18 CFR 385.211 or 385.214). All such motions to intervene or protest should be filed on or before August 21, 2000. Protests will be considered by the Commission in determining the appropriate action to be taken but will not serve to make protestants parties to the proceeding. Any person wishing to become a party must file a motion to intervene. Copies of these filings are on file with the Commission and are available for public inspection. This filing may be viewed on the web at *http://www.ferc.fed.us/online/rims.htm* (call 202–208–2222 for assistance).

David P. Boergers,

Secretary.

[FR Doc. 00–20195 Filed 8–9–00; 8:45 am]

BILLING CODE 6717–01–M

DEPARTMENT OF ENERGY

Federal Energy Regulatory Commission

[Docket No. RP96–272–016]

Northern Natural Gas Company; Notice of Proposed Changes in FERC Gas Tariff

August 4, 2000.

Take notice that Northern Natural Gas Company (Northern) on July 31, 2000, tendered for filing to become part of Northern's FERC Gas Tariff, the following tariff sheets, proposed to become effective on August 1, 2000:

Fifth Revised Volume No. 1

Eighth Revised Sheet No. 66
Third Revised Sheet No. 66C

The above sheets are being filed to implement a specific negotiated rate transaction in accordance with the Commission's Policy Statement on Alternatives to Traditional Cost-of-Service Ratemaking for Natural Gas Pipelines.

Northern further states that copies of the filing have been mailed to each of its customers and interested State Commissions.

Any person desiring to protest this filing should file a protest with the Federal Energy Regulatory Commission, 888 First Street, NE, Washington, DC 20426, in accordance with section 385.211 of the Commission's Rules and Regulations. All such protests must be filed as provided in section 154.210 of the Commission's Regulations. Protests will be considered by the Commission in determining the appropriate action to be taken, but will not serve to make protestants parties to the proceedings. Copies of this filing are on file with the Commission and are available for public inspection in the Public Reference Room. This filing may also be viewed on the web at http://www.ferc.fed.us/online/rims.htm (call 202–208–2222 for assistance).

David P. Boergers,

Secretary.

[FR Doc. 00–20198 Filed 8–9–00; 8:45 am]

BILLING CODE 6717–01–M

DEPARTMENT OF ENERGY

Federal Energy Regulatory Commission

[Docket No. EL00–96–000]

Old Dominion Electric Cooperative v. PJM Interconnection, L.L.C. and Conectiv; Notice of Complaint

August 4, 2000.

Take notice that on August 3, 2000, Old Dominion Electric Cooperative (Old Dominion) filed a complaint against PJM Interconnection, L.L.C. (PJM) and Conectiv requesting emergency relief and fast track processing. Old Dominion alleges that the congestion charges paid by Old Dominion for network transmission service from PJM are unjust, unreasonable, unduly discriminatory and unduly preferential. Old Dominion requests emergency interim relief, pending a long-term solution, in the form of directing PJM to exclude from the congestion price calculation certain low-voltage facilities that Conectiv re-designated for PJM operation and control in July of 1999 or, in the alternative, directing PJM to provide Old Dominion its load ratio share of fixed transmission rights for the southern Delmarva Peninsula.

Any person desiring to be heard or to protest this filing should file a motion to intervene or protest with the Federal Energy Regulatory Commission, 888 First Street, NE. Washington, DC 20426, in accordance with Rules 211 and 214 of the Commission's Rules of Practice and Procedure (18 CFR 385.211 and 385.214). All such motions or protests must be filed on or before August 15, 2000. Protests will be considered by the Commission in determining the appropriate action to be taken, but will not serve to make protestants parties to the proceeding. Any person wishing to become a party must file a motion to intervene. Copies of this filing are on file with the Commission and are available for public inspection in the Public Reference Room. This filing may also be viewed on the Internet at http://www.ferc.fed.us/online/rims.htm (call (202) 202 2222 for assistance). Answers to the complaint shall also be due on or before August 15, 2000.

David P. Boergers,

Secretary.

[FR Doc. 00–20194 Filed 8–9–00; 8:45 am]

BILLING CODE 6717–01–M

DEPARTMENT OF ENERGY

Federal Energy Regulatory Commission

[Docket No. RP99–518–016]

PG&E Gas Transmission, Northwest Corporation; Notice of Proposed Change in FERC Gas Tariff

August 4, 2000.

Take notice that on August 1, 2000, PG&E Gas Transmission, Northwest Corporation (PG&E GTN) tendered for filing Third Revised Sheet No. 7.01 as part of its FERC Gas Tariff, First Revised Volume No. 1–A.

PG&E GTN requests that the above-referenced tariff sheet become effective August 1, 2000.

PG&E GTN states that this sheet is being filed to reflect the implementation of one negotiated rate agreement.

PG&E GTN further states that a copy of this filing has been served on PG&E GTN's jurisdictional customers and interested state regulatory agencies.

Any person desiring to protest this filing should file a protest with the Federal Energy Regulatory Commission, 888 First Street, NE, Washington, DC 20426, in accordance with section 385.211 of the Commission's Rules and Regulations. All such protests must be filed as provided in section 154.210 of the Commission's Regulations. Protests will be considered by the Commission in determining the appropriate action to be taken, but will not serve to make protestants parties to the proceedings. Copies of this filing are on file with the Commission and are available for public inspection in the Public Reference Room. This filing may also be viewed on the web at http://www.ferc.fed.us/

online/rims.htm (call 202–208–2222 for assistance).

David P. Boergers,

Secretary.

[FR Doc. 00–20204 Filed 8–9–00; 8:45 am]

BILLING CODE 6717–01–M

DEPARTMENT OF ENERGY

Federal Energy Regulatory Commission

[Docket No. RP96–200–056]

Reliant Energy Gas Transmission Company; Notice of Proposed Changes in FERC Gas Tariff

August 4, 2000.

Take notice that on July 31, 2000, Reliant Energy Gas Transmission Company (REGT) tendered for filing as part of its FERC Gas Tariff, Fifth Revised Volume No. 1, the following tariff sheets to be effective August 1, 2000:

Second Revised Sheet No. 8B
Sixth Revised Sheet No. 8F
Second Revised Sheet No. 8I

REGT states that the purpose of this filing is to reflect the addition of two new negotiated rate contracts and the expiration of an existing negotiated rate contract.

Any person desiring to protest this filing should file a protest with the Federal Energy Regulatory Commission, 888 First Street, NE., Washington, DC 20426, in accordance with section 385.211 of the Commission's Rules and Regulations. All such protests must be filed as provided in section 154.210 of the Commission's Regulations. Protests will be considered by the Commission in determining the appropriate action to be taken, but will not serve to make protestants parties to the proceedings. Copies of this filing are on file with the Commission and are available for public inspection in the Public Reference Room. This filing may be viewed on the web at http://www.ferc.fed.us/online/rims.htm (call 202–208–2222 for assistance).

David P. Boergers,

Secretary.

[FR Doc. 00–20199 Filed 8–9–00; 8:45 am]

BILLING CODE 6717–01–M

DEPARTMENT OF ENERGY

Federal Energy Regulatory Commission

[Docket No. EL00–97–000]

Reliant Energy Power Generation, Inc., Dynegy Power Marketing, Inc., and Southern Energy California, L.L.C., Complainants v. California Independent System Operator Corporation, Respondent; Notice of Complaint

August 4, 2000.

Take notice that on August 3, 2000, Reliant Energy Power Generation, Inc., Dynegy Power Marketing, Inc., and Southern Energy California, L.L.C. (Complainants), tendered for filing a complaint against the California Independent Systems Operator Corporation (CAISO) alleging that the CAISO's failure to provide a mechanism by which generators will be fully compensated for curtailed exports is unjust and unreasonable. Complainants request that the Commission find that the CAISO must compensate participating generators, scheduling coordinators or other sellers for any actual damages and for lost opportunity costs in the event that the CAISO curtails a market participant's export schedule in response to conditions within the CAISO Control Area. Complainants further request, in light of the severe economic and practical impact on market participants and markets presented by the current uncertainty on this issue, that the Commission act as quickly as possible.

Copies of the filing were served upon the CAISO and other interested parties.

Any person desiring to be heard or to protest such filing should file a motion to intervene or protest with the Federal Energy Regulatory Commission, 888 First Street, NE., Washington, DC 20426, in accordance with Rules 211 and 214 of the Commission's Rules of Practice and Procedure (18 CFR 385.211 and 385.214). All such motions and protests should be filed on or before August 14, 2000. Protests will be considered by the Commission to determine the appropriate action to be taken, but will not serve to make protestants parties to the proceedings. Any person wishing to become a party must file a motion to intervene. Copies of this filing are on file with the Commission and are available for public inspection. This filing may also be viewed on the Internet at http://www.ferc.fed.us/online/rims.htm (call 202–208–2222 for assistance). Answers to the complaint shall also be due on or before August 14, 2000.

David P. Boergers,

Secretary.

[FR Doc. 00–20196 Filed 8–9–00; 8:45 am]

BILLING CODE 6717–01–M

DEPARTMENT OF ENERGY

Federal Energy Regulatory Commission

[Docket No. RP97–255–010]

TransColorado Gas Transmission Company; Notice of Tariff Filing

August 4, 2000.

Take notice that on July 31, 2000, pursuant to 18 CFR 154.7 and 154.203, and in compliance with the Commission's letter order issued March 20, 1997, in Docket No. RP97–255–000, TransColorado Gas Transmission Company (TransColorado) tendered for filing and acceptance, to be effective August 1, 2000, Tenth Revised Sheet No. 21 and Sixth Revised Sheet No. 22 to Original Volume No. 1 of its FERC Gas Tariff.

The tendered tariff sheets revised TransColorado's Tariff to implement amended negotiated-rate firm transportation service agreements between TransColorado and Barrett Resources Corp., and TransColorado and Texaco Natural Gas, Inc.; and new negotiated-rate firm transportation service agreements between TransColorado and Sempra Energy Trading and TransColorado and National Fuel Marketing Company. TransColorado requested waiver of 18 CFR 154.207 so that the tendered tariff sheets may become effective August 1, 2000.

TransColorado stated that a copy of this filing has been served upon all parties to this proceeding, TransColorado's customers, the Colorado Public Utilities Commission and New Mexico Public Utilities Commission.

Any person desiring to protest this filing should file a protest with the Federal Energy Regulatory Commission, 888 First Street, NE., Washington, DC 20426, in accordance with section 385.211 of the Commission's Rules and Regulations. All such protests must be filed as provided in Section 154.210 of the Commission's Regulations. Protests will be considered by the Commission in determining the appropriate action to be taken, but will not serve to make protestants parties to the proceedings. Copies of this filing are on file with the Commission and are available for public

inspection in the Public Reference Room. This filing may be viewed on the web at http://www.ferc.fed.us/online/rims.htm (call 202–208–2222 for assistance).

David P. Boergers,

Secretary.

[FR Doc. 00–20206 Filed 8–9–00; 8:45 am]

BILLING CODE 6717–01–M

DEPARTMENT OF ENERGY

Federal Energy Regulatory Commission

[Docket No. RP96–129–013]

Trunkline Gas Company; Notice of Refund Report

August 4, 2000.

Take notice that on July 31, 2000, Trunkline Gas Company (Trunkline) tendered for filing its Refund Report pursuant to the Commission's order issued February 1, 2000.

Trunkline states that it made refunds on April 3, 2000 and June 30, 2000 pursuant to Article II, Section 2 of Stipulation and Agreement issued September 16, 1999.

Trunkline further states it is submitting herein Appendix A, which reflects the amounts refunded to each affected party on April 3, 2000 and June 30, 2000.

Trunkline further states that a copy of this filing is available for public inspection during regular business hours at Trunkline's office at 5444 Westheimer Rd., Houston, Texas 77056–5306. In addition, copies of this filing are being served on all affected customers and applicable state regulatory agencies.

Any person desiring to protest this filing should file a protest with the Federal Energy Regulatory Commission, 888 First Street, NE, Washington, DC 20426, in accordance with section 385.211 of the Commission's Rules and Regulations. All such protests must be filed as provided in section 154.210 of the Commission's Regulations. Protests will be considered by the Commission in determining the appropriate action to be taken, but will not serve to make protestants parties to the proceedings. Copies of this filing are on file with the Commission and are available for public inspection in the Public Reference Room. This filing may also be viewed on the web at http://www.ferc.fed.us/online/rims.htm (call 202–208–2222 for assistance).

David P. Boergers,

Secretary.

[FR Doc. 00–20200 Filed 8–9–00; 8:45 am]

BILLING CODE 6717–01–M

DEPARTMENT OF ENERGY

Federal Energy Regulatory Commission

[Docket No. EC00–117–000, et al.]

Calpine Corporation, et al.; Electric Rate and Corporate Regulation Filings

August 3, 2000.

Take notice that the following filings have been made with the Commission:

1. Calpine Corporation, Polsky Energy Corporation and SkyGen Energy Holdings LLC

[Docket No. EC00–117–000]

Take notice that on July 26, 2000, Calpine Corporation (Calpine), Polsky Energy Corporation (PEC) and SkyGen Energy Holdings LLC (collectively, Applicants) tendered for filing an application under section 203 of the Federal Power Act for approval of the disposition of jurisdictional facilities that will result from Calpine's purchase of all of the outstanding shares of PEC.

Comment date: August 25, 2000, in accordance with Standard Paragraph E at the end of this notice.

2. Arizona Public Service Company, Pinnacle West Capital Corporation, Pinnacle West Energy Corporation

[Docket No. EC00–118–000]

Take notice that on July 28, 2000, Arizona Public Service Corporation (APS), Pinnacle West Capital Corporation (PWCC), and Pinnacle West Energy Corporation (PWE) (collectively, Applicants) filed with the Commission an Application for Authorization to Transfer Jurisdictional Facilities under section 203 of the Federal Power Act, 16 U.S.C. 824b (1994), and Part 33 of the Federal Energy Regulatory Commission's (FERC or the Commission) Regulations, 18 CFR 33.1–33.10.

Comment date: August 28, 2000, in accordance with Standard Paragraph E at the end of this notice.

3. New England Power Company

[Docket No. EC00–119–000]

Take notice that on July 28, 2000, New England Power Company (NEP) tendered for filing a lease agreement with USGen New England, Inc. (USGen) for the temporary use of a spare transformer at USGen's Brayton Point generation site.

Comment date: August 28, 2000, in accordance with Standard Paragraph E at the end of this notice.

4. Western Systems Power Pool

[Docket No. ER91–195–043]

Take notice that on July 31, 2000, the Western Systems Power Pool (WSPP) filed certain information as required by Ordering paragraph (D) of the Commission's June 27, 1991 order (55 FERC ¶ 61,495) and Ordering Paragraph (C) of the Commission's June 1, 1992 Order On Rehearing Denying Request Not To Submit Information, And Granting In Part And Denying In Part Privileged Treatment. Pursuant to 18 CFR 385.211, WSPP has requested privileged treatment for some of the information filed consistent with the June 1, 1992 order.

Comment date: August 21, 2000, in accordance with Standard Paragraph E at the end of this notice.

5. Connecticut Yankee Atomic Power Company

[Docket No. ER97–913–002]

Take notice that on July 31, 2000, Connecticut Yankee Atomic Power Company (Company or Connecticut Yankee) tendered for filing executed amendments to the Power Contracts between the Company and each of its wholesale purchasers—The Connecticut Light and Power Company, New England Power Company, Boston Edison Company, The United Illuminating Company, Western Massachusetts Electric Company, Central Maine Power Company, Public Service Company of New Hampshire, Cambridge Electric Light Company, and Central Vermont Public Service Corporation.

The proposed amendments are made in compliance with the Commission's July 26, 2000 letter order approving the settlement filed by Connecticut Yankee on April 7, 2000, as supplemented on April 27, 2000, in Docket No. ER97–913–001. Connecticut Yankee Atomic Power Company, 92 FERC ¶ 61,055 (2000). By this filing, the Company seeks to ensure sufficient funding to safely decommission Connecticut Yankee's 583 MW nuclear generating unit in Haddam Neck, Connecticut.

Comment date: August 21, 2000, in accordance with Standard Paragraph E at the end of this notice.

6. California Independent System Operator Corporation

[Docket No. ER00–2383–001]

Take notice that on July 31, 2000, the California Independent System Operator

Corporation (ISO) tendered for filing a change to the ISO Tariff to comply with the Commission's order in California Independent System Operator Corporation, 91 FERC ¶ 61,324 (2000). This change provides that any Participating Load that enters into an appropriate Participating Load Agreement can benefit from the same ''no-pay'' exemption that applies to Load that has been selected to participate in the ISO's Summer 2000 trial program.

The ISO states that this filing has been served upon all parties in this proceeding.

Comment date: August 21, 2000, in accordance with Standard Paragraph E at the end of this notice.

7. California Independent System Operator Corporation

[Docket No. ER00–3302–000]

Take notice that on July 28, 2000, the California Independent System Operator Corporation (ISO), tendered for filing a notice concerning the termination of the Meter Service Agreement for Scheduling Coordinators between the ISO and QST Energy Trading Inc.

The ISO requests that the agreement be terminated effective as of May 10, 2000. The ISO also requests waiver of the Commission's sixty-day prior notice requirement, pursuant to Section 35.3 of the Commission's Regulations, 18 CFR 35.3, in order to permit this effective date.

The ISO states that copies of this filing have been served upon all parties in the above-referenced docket.

Comment date: August 18, 2000, in accordance with Standard Paragraph E at the end of this notice.

8. California Independent System Operator Corporation

[Docket No. ER00–3303–000]

Take notice that on July 28, 2000, the California Independent System Operator Corporation (ISO), tendered for filing a notice concerning the termination of the Scheduling Coordinator Agreement (SCA) between the ISO and QST Energy Trading Inc. The ISO requests that the SCA be terminated effective as of May 10, 2000.

The ISO also requests waiver of the Commission's sixty-day prior notice requirement, pursuant to Section 35.3 of the Commission's Regulations, 18 CFR 35.3, in order to permit this effective date.

The ISO states that copies of this filing have been served upon all parties in the above-referenced docket.

Comment date: August 18, 2000, in accordance with Standard Paragraph E at the end of this notice.

9. California Independent System Operator Corporation

[Docket No. ER00–3304–000]

Take notice that on July 28, 2000, the California Independent System Operator Corporation (ISO), tendered for filing a notice concerning the termination of the Meter Service Agreement for Scheduling Coordinators between the ISO and LG&E Energy Marketing, Inc.

The ISO requests that the agreement be terminated effective as of May 31, 2000. The ISO also requests waiver of the Commission's sixty-day prior notice requirement, pursuant to section 35.3 of the Commission's Regulations, 18 CFR 35.3, in order to permit this effective date.

The ISO states that copies of this filing have been served upon all parties in the above-referenced docket.

Comment date: August 18, 2000, in accordance with Standard Paragraph E at the end of this notice.

10. California Independent System Operator Corporation

[Docket No. ER00–3305–000]

Take notice that on July 28, 2000, the California Independent System Operator Corporation (ISO), tendered for filing a notice concerning the termination of the Scheduling Coordinator Agreement (PGA) between the ISO and Calpine Geysers Company.

The ISO requests that the PGA be terminated effective as June 6, 2000. The ISO also requests waiver of the Commission's sixty-day prior notice requirement, pursuant to section 35.3 of the Commission's Regulations, 18 CFR 35.3, in order to permit this effective date.

The ISO states that copies of this filing have been served upon all parties in the above-referenced docket.

Comment date: August 18, 2000, in accordance with Standard Paragraph E at the end of this notice.

11. California Independent System Operator Corporation

[Docket No. ER00–3306–000]

Take notice that on July 28, 2000, the California Independent System Operator Corporation (ISO), tendered for filing a notice concerning the termination of the Scheduling Coordinator Agreement (PGA) between the ISO and San Diego Gas & Electric Company.

The ISO requests that the PGA be terminated effective as June 23, 2000. The ISO also requests waiver of the Commission's sixty-day prior notice requirement, pursuant to Section 35.3 of the Commission's Regulations, 18 CFR 35.3, in order to permit this effective date.

The ISO states that copies of this filing have been served upon all parties in the above-referenced docket.

Comment date: August 18, 2000, in accordance with Standard Paragraph E at the end of this notice.

12. California Independent System Operator Corporation

[Docket No. ER00–3307–000]

Take notice that on July 28, 2000, the California Independent System Operator Corporation (ISO), tendered for filing a notice concerning the termination of the Meter Service Agreement for Scheduling Coordinators between the ISO and Citizens Power Sales LLC.

The ISO requests that the agreement be terminated effective as of May 4, 2000. The ISO also requests waiver of the Commission's sixty-day prior notice requirement, pursuant to Section 35.3 of the Commission's Regulations, 18 CFR 35.3, in order to permit this effective date.

The ISO states that copies of this filing have been served upon all parties in the above-referenced docket.

Comment date: August 18, 2000, in accordance with Standard Paragraph E at the end of this notice.

13. California Independent System Operator Corporation

[Docket No. ER00–3308–000]

Take notice that on July 28, 2000, the California Independent System Operator Corporation (ISO), tendered for filing a notice concerning the termination of the Meter Service Agreement for ISO Metered Entities between the ISO and Simpson Paper Company, Humboldt Mill.

The ISO requests that the agreement be terminated effective as of May 9, 2000. The ISO also requests waiver of the Commission's sixty-day prior notice requirement, pursuant to Section 35.3 of the Commission's Regulations, 18 CFR 35.3, in order to permit this effective date.

The ISO states that copies of this filing have been served upon all parties in the above-referenced docket.

Comment date: August 18, 2000, in accordance with Standard Paragraph E at the end of this notice.

14. Illinois Power Company

[Docket No. ER00–3309–000]

Take notice that on July 28, 2000, Illinois Power Company (IP), tendered for filing notice that Illinois Power Company Open Access Transmission Tariff—FERC Electric Tariff, Second Revised Volume No. 8, should be considered modified such as to adopt the Transmission Loading Relief (TLR)

procedures proposed by the North American Electric Reliability Council and accepted by the Commission, in North America Electric Reliability Council, 91 FERC 61,122 (2000).

IP Requests waiver of these requirements of the aforementioned order to permit it to file this notice out of time. Copies of this filing have been served upon all transmission customers of IP and the Illinois Commerce Commission.

Comment date: August 18, 2000, in accordance with Standard Paragraph E at the end of this notice.

15. Alliant Energy Corporate Services, Inc.

[Docket No. ER00–3310–000]

Take notice that on July 28, 2000, Alliant Energy Corporate Services, Inc. (Alliant Energy), tendered for filing executed Service Agreements for short-term firm point-to-point transmission service and non-firm point-to-point transmission service, establishing Enron Wind Development Corp., as a point-to-point Transmission Customer under the terms of the Alliant Energy Corporate Services, Inc., transmission tariff.

Alliant Energy Corporate Services, Inc., requests an effective date of July 19, 2000, and accordingly, seeks waiver of the Commission's notice requirements.

A copy of this filing has been served upon the Illinois Commerce Commission, the Minnesota Public Utilities Commission, the Iowa Department of Commerce, and the Public Service Commission of Wisconsin.

Comment date: August 18, 2000, in accordance with Standard Paragraph E at the end of this notice.

16. Alliant Energy Corporate Services, Inc.

[Docket No. ER00–3311–000]

Take notice that on July 28, 2000, Alliant Energy Corporate Services, Inc., tendered for filing executed Service Agreements for short-term firm point-to-point transmission service and non-firm point-to-point transmission service, establishing DTE Energy Trading, Inc., as a point-to-point Transmission Customer under the terms of the Alliant Energy Corporate Services, Inc. transmission tariff.

Alliant Energy Corporate Services, Inc. requests an effective date of July 19, 2000, and accordingly, seeks waiver of the Commission's notice requirements.

A copy of this filing has been served upon the Illinois Commerce Commission, the Minnesota Public Utilities Commission, the Iowa Department of Commerce, and the Public Service Commission of Wisconsin.

Comment date: August 18, 2000, in accordance with Standard Paragraph E at the end of this notice.

17. Pinnacle West Energy Corporation

[Docket No. ER00–3312–000]

Take notice that on July 28, 2000, Pinnacle West Energy Corporation (PWE), tendered for filing an application for an order authorizing it to make wholesale sales of electric power at market-based rates, waiving certain of the Commission's Regulations and seeking blanket approval to engage in certain transactions.

Pursuant to Section 35.3(a) of the Commission's Regulations, PWE also requests an effective date of 60 days after this filing, or the date on which the Commission issues an order approving PWE's application for market-based rates, whichever is earlier.

Comment date: August 18, 2000, in accordance with Standard Paragraph E at the end of this notice.

18. Tucson Electric Power Company

[Docket No. ER00–3313–000]

Take notice that on July 28, 2000, Tucson Electric Power Company tendered for filing one (1) umbrella service agreement (for short-term firm service) and one (1) Service Agreement for Non-Firm Transmission Service pursuant to Part II of Tucson's Open Access Transmission Tariff, which was filed in Docket No. OA96–140–000.

(1) Umbrella Agreement for Short-Term Firm Point-to-Point Transmission Service dated as of July 12, 2000 by and between Tucson Electric Power Company and San Diego Gas and Electric. No service has commenced at this time.

(2) Service Agreement for Non-Firm Point-to-Point Transmission Service dated as of July 12, 2000 by and between Tucson Electric Power Company and San Diego Gas and Electric. No service has commenced at this time.

Comment date: August 18, 2000, in accordance with Standard Paragraph E at the end of this notice.

19. Arizona Public Service Company

[Docket No. ER00–3314–000]

Take notice that on July 28, 2000, Arizona Public Service Company (APS) tendered for filing umbrella Service Agreements to provide Short-Term Firm and Non-Firm Point-to-Point Transmission Service to Salt River Project Agricultural and Power Improvement District under APS'' Open Access Transmission Tariff.

A copy of this filing has been served on Salt River Project Agricultural and Power Improvement District, and the Arizona Corporation Commission.

Comment date: August 18, 2000, in accordance with Standard Paragraph E at the end of this notice.

20. American Transmission Company LLC

[Docket No. ER00–3316–000]

Take notice that on July 31, 2000, the American Transmission Company LLC tendered for filing its FERC Electric Service Tariff, Volume No. 1.

Copies of this filing were served upon the public utility's jurisdictional customers and affected state agencies.

Comment date: August 21, 2000, in accordance with Standard Paragraph E at the end of this notice.

21. Pacific Gas and Electric Company

[Docket No. ER00–3317–000]

Take notice that on July 31, 2000, Pacific Gas and Electric Company (PG&E), tendered for filing A Notice of Termination, Revised Pages and new Exhibit A and a Revised Appendix A to the September 22, 1993 Power and Transmission Services Agreement between PG&E and Lassen Municipal Utility District (Lassen). These submittals propose to increase Lassen's allocation of Federal Central Valley Power and adjust energy, power and transmission rates for services PG&E provides Lassen to be effective July 1, 1997 through June 30, 2000.

Copies of this filing have been served upon Lassen and the California Public Utilities Commission.

Comment date: August 21, 2000, in accordance with Standard Paragraph E at the end of this notice.

22. Tampa Electric Company

[Docket No. ER00–3328–000]

Take notice that on July 31, 2000, Tampa Electric Company (Tampa Electric), tendered for filing a service agreement with the Utilities Commission, City of New Smyrna Beach, Florida (NSB) under Tampa Electric's market-based sales tariff.

Tampa Electric requests that the service agreement be made effective on July 5, 2000.

Copies of the filing have been served on NSB and the Florida Public Service Commission.

Comment date: August 21, 2000, in accordance with Standard Paragraph E at the end of this notice.

23. Duke Energy Corporation

[Docket No. ER00–3329–000]

Take notice that on July 31, 2000, Duke Energy Corporation (Duke),

tendered for filing a Service Agreement with Oglethorpe Power Corporation, for Transmission Service under Duke's Open Access Transmission Tariff.

Duke requests that the proposed Service Agreement be permitted to become effective on June 16, 2000.

Duke states that this filing is in accordance with Part 35 of the Commission's Regulations and a copy has been served on the North Carolina Utilities Commission.

Comment date: August 21, 2000, in accordance with Standard Paragraph E at the end of this notice.

24. Enron Energy Marketing Corporation

[Docket No. ER00–3330–000]

Take notice that on July 31, 2000, Enron Energy Marketing Corp., tendered a Notice of Succession pursuant to 18 CFR 35.16 and 131.51 of the Commission's Regulations. Enron Energy Marketing Corp., is succeeding to the Rate Schedule FERC No. 1, Market-Based Rate Schedule, and Supplement No. 1 to Rate Schedule FERC No. 1, Code of Conduct filed in Docket Nos. ER95–1614, *et al.,* effective June 29, 2000.

Comment date: August 21, 2000, in accordance with Standard Paragraph E at the end of this notice.

25. Entergy Services, Inc.

[Docket No. ER00–3331–000]

Take notice that on July 31, 2000, Entergy Services, Inc. (Entergy), on behalf of Entergy Arkansas, Inc., Entergy Gulf States, Inc., Entergy Louisiana, Inc., Entergy Mississippi, Inc., and Entergy New Orleans, Inc., submitted to the Commission for filing copies of a Service Agreement for Purchase of Supplemental Capacity, between Entergy and PECO Energy Company.

Comment date: August 21, 2000, in accordance with Standard Paragraph E at the end of this notice.

26. Duke Energy Corporation

[Docket No. ER00–3332–000]

Take notice that on July 31, 2000, Duke Energy Corporation (Duke), tendered for filing a Service Agreement with H.Q. Energy Services (U.S.) Inc., for Transmission Service under Duke's Open Access Transmission Tariff.

Duke requests that the proposed Service Agreement be permitted to become effective on July 12, 2000.

Duke states that this filing is in accordance with Part 35 of the Commission's Regulations and a copy has been served on the North Carolina Utilities Commission.

Comment date: August 21, 2000, in accordance with Standard Paragraph E at the end of this notice.

27. Madison Gas and Electric Company

[Docket No. ER00–3333–000]

Take notice that on July 31, 2000, Madison Gas and Electric Company (MGE), tendered for filing a service agreement under MGE's Market-Based Power Sales Tariff with Public Service Company of Colorado.

MGE requests the agreement be effective on the date it was filed with the FERC.

Comment date: August 21, 2000, in accordance with Standard Paragraph E at the end of this notice.

28. Illinois Power Company

[Docket No. ER00–3334–000]

Take notice that on July 31, 2000, Illinois Power Company (Illinois Power), 500 South 27th Street, Decatur, Illinois 62521, tendered for filing updated specification pages to the existing unexecuted Service Agreement for Network Integration Transmission Service under which Soyland Power Cooperative, Inc., will take transmission service pursuant to Illinois Power's open access transmission tariff (OATT). The agreements are based on the Forms of Service Agreement in Illinois Power's OATT.

Illinois Power has requested an effective date of July 1, 2000.

Comment date: August 21, 2000, in accordance with Standard Paragraph E at the end of this notice.

29. Northern Indiana Public Service Company

[Docket No. ER00–3335–000]

Take notice that on July 31, 2000, Northern Indiana Public Service Company (Northern Indiana), tendered for filing a Service Agreement pursuant to its Wholesale Market-Based Rate Tariff with Amerada Hess Corporation (Amerada Hess).

Northern Indiana has requested an effective date of August 1, 2000.

Copies of this filing have been sent to Amerada Hess, the Indiana Utility Regulatory Commission, and the Indiana Office of Utility Consumer Counselor.

Comment date: August 21, 2000, in accordance with Standard Paragraph E at the end of this notice.

30. Northern Indiana Public Service Company

[Docket No. ER00–3336–000]

Take notice that on July 31, 2000, Northern Indiana Public Service Company (Northern Indiana), tendered for filing a Service Agreement pursuant to its Wholesale Market-Based Rate Tariff with Consumers Energy Company (Consumers).

Northern Indiana has requested an effective date of August 1, 2000.

Copies of this filing have been sent to Consumers, the Indiana Utility Regulatory Commission, and the Indiana Office of Utility Consumer Counselor.

Comment date: August 21, 2000, in accordance with Standard Paragraph E at the end of this notice.

31. New York State Electric & Gas Corporation

[Docket No. ER00–3337–000]

Take notice that on July 31, 2000, New York State Electric & Gas Corporation filed revisions to its Transmission Service Charge under the New York Independent System Operator (NYISO) Open Access Transmission Tariff and requested that its filing become effective on August 1, 2000.

A copy of this filing was served upon the New York State Public Service Commission, the NYISO, and any transmission customer who paid NYSEG's Transmission Service Charge under the NYISO's Open Access Transmission Tariff during the prior three months.

Comment date: August 21, 2000, in accordance with Standard Paragraph E at the end of this notice.

32. Golden Spread Electric Cooperative, Inc.

[Docket No. ER00–3338–000]

Take notice that on July 31, 2000, Golden Spread Electric Cooperative, Inc. (Golden Spread), tendered for filing a letter approving its membership in the Western Systems Power Pool (WSPP).

Golden Spread requests that the Commission allow its membership in the WSPP to become effective on August 1, 2000.

Golden Spread states that a copy of this filing has been served on the Public Utility Commission of Texas, the Oklahoma Corporation Commission, the WSPP Executive Committee, General Counsel to the WSPP and on the members of the WSPP.

Comment date: August 21, 2000, in accordance with Standard Paragraph E at the end of this notice.

Standard Paragraphs

E. Any person desiring to be heard or to protest such filing should file a motion to intervene or protest with the Federal Energy Regulatory Commission, 888 First Street, NE., Washington, DC 20426, in accordance with Rules 211 and 214 of the Commission's Rules of

Practice and Procedure (18 CFR 385.211 and 385.214). All such motions or protests should be filed on or before the comment date. Protests will be considered by the Commission in determining the appropriate action to be taken, but will not serve to make protestants parties to the proceeding. Any person wishing to become a party must file a motion to intervene. Copies of these filings are on file with the Commission and are available for public inspection. This filing may also be viewed on the Internet at http://www.ferc.fed.us/ online/rims.htm (call 202–208–2222 for assistance).

David P. Boergers,

Secretary.

[FR Doc. 00–20197 Filed 8–9–00; 8:45 am]

BILLING CODE 6717–01–P

DEPARTMENT OF ENERGY

Federal Energy Regulatory Commission

[Docket No. EL00–62–005, et al.]

ISO New England Inc., et al.; Electric Rate and Corporate Regulation Filings

August 4, 2000.

Take notice that the following filings have been made with the Commission:

1. ISO New England Inc.

[Docket No. EL00–62–005]

Take notice that on July 28, 2000, ISO New England Inc. submitted its compliance filing in response to the Commission's June 28, 2000 Order in this Docket.

Copies of said filing have been served upon all parties to this proceeding, and upon NEPOOL Participants, and upon all non-Participant entities that are customers under the NEPOOL Open Access Transmission Tariff, as well as upon the utility regulatory agencies of the six New England States.

Comment date: August 28, 2000, in accordance with Standard Paragraph E at the end of this notice.

2. ISO New England Inc.

[Docket Nos. EL00–62–006]

Take notice that on July 28, 2000, the New England Power Pool (NEPOOL) Participants Committee submitted the Fifty-Eighth Agreement Amending the Restated NEPOOL Agreement (Fifty-Eighth Agreement), the Fifty-Ninth Agreement Amending the Restated NEPOOL Agreement (Fifty-Ninth Agreement) and the Sixtieth Agreement Amending the Restated NEPOOL Agreement (Sixtieth Agreement) in response to requirements of the Commission's June 28, 2000 order in Docket Nos. EL00–62–000 *et al., ISO New England Inc.*, 91 FERC ¶ 61,311 (2000) concerning the implementation of a congestion management system and multi-settlement system. In accordance with the requirements of that order, NEPOOL has noted an effective date of July 28, 2000, except with respect to changes to the provisions relating to Installed Capability, which are to become effective August 1, 2000.

The NEPOOL Participants Committee states that copies of these materials were sent to all persons identified on the service lists in the captioned proceedings, the NEPOOL Participants and the six New England state governors and regulatory commissions.

Comment date: August 28, 2000, in accordance with Standard Paragraph E at the end of this notice.

3. California Independent System Operator Corporation

[Docket No. ER00–1239–004]

Take notice that on July 31, 2000, the California Independent System Operator Corporation (ISO) tendered for filing a change to the ISO Tariff to comply with the Commission's order in California Independent System Operator Corporation, 91 FERC ¶ 61,341 (2000). This change reflects the principle that the allocation of outage cancellation costs should be to all Scheduling Coordinators in proportion to their metered Demand during the Settlement Period(s) that the outage was originally scheduled to have occurred.

The ISO states that this filing has been served upon all parties in this proceeding.

Comment date: August 21, 2000, in accordance with Standard Paragraph E at the end of this notice.

4. New England Power Pool

[Docket No. ER00–3339–000]

Take notice that on August 1, 2000, the New England Power Pool (NEPOOL) Participants Committee filed for acceptance materials to permit NEPOOL to expand its membership to include The Maine Health & Higher Educational Facilities Authority (MHEFA), Marc Schaefer (Schaefer) and New York State Electric & Gas Corporation (NYSEG).

The Participants Committee requests an effective date of August 1, 2000 for commencement of participation in NEPOOL by Schaefer and NYSEG and October 1, 2000 for commencement of participation in NEPOOL by MHEFA.

The Participants Committee states that copies of these materials were sent to the New England state governors and regulatory commissions and the Participants in NEPOOL.

Comment date: August 22, 2000, in accordance with Standard Paragraph E at the end of this notice.

5. New England Power Pool

[Docket No. ER00–3340–000]

Take notice that on August 1, 2000, the New England Power Pool (NEPOOL) Participants Committee filed for acceptance materials to terminate the memberships of ACN Power, Inc. (ACN) and Northeast Energy Services, Inc. (NORESCO).

At the request of ACN and NORESCO, the Participants Committee seeks a July 1, 2000 effective date for each termination.

The Participants Committee states that copies of these materials were sent to the New England state governors and regulatory commissions and the Participants in NEPOOL.

Comment date: August 22, 2000, in accordance with Standard Paragraph E at the end of this notice.

6. Southern California Edison Company

[Docket No. ER00–3341–000]

Take notice that on August 1, 2000, Southern California Edison Company (SCE) tendered for filing the Amended and Restated Power Exchange Agreement (Amended Agreement) between SCE and the Tucson Electric Power Company (Tucson).

The Amended Agreement serves to revise the terms and conditions of firm system capacity and associated energy being exchanged by SCE and Tucson.

Copies of this filing were served upon the Public Utilities Commission of the State of California and all interested parties.

Comment date: August 22, 2000, in accordance with Standard Paragraph E at the end of this notice.

7. California Independent System Operator Corporation

[Docket No. ER00–3342–000]

Take notice that on August 1, 2000, the California Independent System Operator Corporation (ISO) tendered for filing a notice concerning the termination of the Scheduling Coordinator Agreement (SCA) between the ISO and LG&E Retail Access Service.

The ISO requests that the SCA be terminated effective as of July 3, 2000.

The ISO states that copies of this filing have been served upon all parties in the above-referenced docket.

Comment date: August 22, 2000, in accordance with Standard Paragraph E at the end of this notice.

8. Duke Power, a division of Duke Energy Corporation

[Docket No. ER00–3343–000]

Take notice that on August 1, 2000, Duke Power (Duke), a division of Duke Energy Corporation, tendered for filing a Service Agreement with Conectiv Energy Supply, Inc. for power sales at market-based rates.

Duke requests that the proposed Service Agreement be permitted to become effective on July 13, 2000.

Duke states that this filing is in accordance with Part 35 of the Commission's Regulations and a copy has been served on the North Carolina Utilities Commission.

Comment date: August 22, 2000, in accordance with Standard Paragraph E at the end of this notice.

9. New England Power Pool

[Docket No. ER00–2148–001]

Take notice that on August 1, 2000, the New England Power Pool (NEPOOL) Participants Committee tendered for filing the NEPOOL Open Access Transmission Tariff Ancillary Service Schedule 2 (Reactive Supply and Voltage Control from Generation Sources Service) Implementation Rule (the Schedule 2 Rule) in response to requirements of the Commission's June 15, 2000 order in Docket No. ER00–2148–000, New England Power Pool, 91 FERC ¶ 61,620 (2000), and to further conform the Schedule 2 Rule with NEPOOL Tariff Schedule 2 in light of modifications to Schedule 2 of the NEPOOL Tariff as accepted effective July 28, 2000 by the Commission in Docket Nos. EL00–62–000 et al., ISO New England Inc., 91 FERC ¶ 61,311 (2000).

The NEPOOL Participants Committee states that copies of these materials were sent to all persons identified on the official service list in Docket ER00–2148–000, the NEPOOL Participants and the six New England state governors and regulatory commissions.

Comment date: August 22, 2000, in accordance with Standard Paragraph E at the end of this notice.

10. PJM Interconnection, L.L.C.

[Docket No. ER99–2028–003]

Take notice that on August 1, 2000, the Market Monitoring Unit (MMU) of PJM Interconnection, L.L.C. (PJM), tendered for filing the MMU's report on Fixed Transmission Rights (FTR) auction procedures. The MMU states that the report is submitted pursuant to the Commission's ''Order Conditionally Accepting Compliance Filing'' issued on April 13, 1999 in Docket No. ER98–2028–000. PJM Interconnection, L.L.C., 87 FERC ¶ 61,054, at 61,220 (1999).

The MMU states that copies of this filing were served upon all PJM Members and each state electric utility regulatory commission in the PJM control area.

Comment date: August 22, 2000, in accordance with Standard Paragraph E at the end of this notice.

11. Golden Spread Electric Cooperative, Inc.

[Docket No. ER00–2919–001]

Take notice that on August 1, 2000, Golden Spread Electric Cooperative, Inc., tendered for filing an executed umbrella service agreement between Golden Spread and Public Service Company of New Mexico under Golden Spread's FERC Electric Tariff, Original Volume No. 1 (Market-Based Rate Tariff).

Golden Spread requests an effective date of May 22, 2000 for the service agreement.

Comment date: August 22, 2000, in accordance with Standard Paragraph E at the end of this notice.

12. Southwest Power Pool, Inc.

[Docket No. ER00–3293–000]

Take notice that on July 31, 2000, Southwest Power Pool, Inc. (SPP), tendered for filing an executed service agreement for Firm Point-to-Point Transmission with Southwestern Public Service Company (SPS); six executed service agreements for Firm Point-to-Point Transmission Service with Southwestern Public Service Company—Wholesale Merchant Function; four executed service agreements for Firm Point-to-Point Transmission Service with West Texas Municipal Power Agency; and two unexecuted service agreements for Network Integration Transmission Service with Golden Spread Electric Cooperative, Inc. (Golden Spread) and South Plains Electric Cooperative, Inc. (South Plains).

SPP seeks an effective date of June 29, 2000 for each of the service agreements.

Copies of this filing were served on all signatories and on Golden Spread and South Plains.

Comment date: August 21, 2000, in accordance with Standard Paragraph E at the end of this notice.

13. Portland General Electric Company

[Docket No. ER00–3301–000]

Take notice that on July 31, 2000, Portland General Electric Company (PGE), tendered for filing under PGE's Market-Based Rate Tariff, FERC Electric Tariff, First Revised Volume No. 11 (Docket No. ER99–1263–000), an executed Service Agreement for Service at Market-Based Rates with Southern Company Energy Marketing, L.P.

Pursuant to 18 CFR Section 35.11, and the Commission's Order in Docket No. PL93–2–002 issued July 30, 1993, PGE respectfully requests that the Commission grant a waiver of the notice requirements of 18 CFR Section 35.3 to allow the Service Agreement to become effective July 25, 2000.

A copy of this filing was caused to be served upon Southern Company Energy Marketing, L.P., as noted in the filing letter.

Comment date: August 21, 2000, in accordance with Standard Paragraph E at the end of this notice.

14. Westcoast Gas Services Delaware (America) Inc.

[Docket No. ER00–3315–000]

Take notice that on July 31, 2000, Westcoast Gas Services Delaware (America) Inc. (WGSI Delaware), tendered for filing an application for waivers and blanket approvals under various regulations of the Commission and for an order accepting WGSI Delaware's Electric Rate Schedule FERC No. 1 to be effective on the earlier of September 1, 2000, or upon issuance of the Commission's order accepting the Rate Schedule.

WGSI Delaware intends to engage in electric power and energy transactions as a marketer and a broker. In transactions where WGSI Delaware sells electric energy, it proposes to make such sales on rates, terms and conditions to be mutually agreed to with the purchasing party. WGSI Delaware's proposed Rate Schedule also permits it to reassign transmission capacity and make resales of firm transmission rights in California.

Comment date: August 21, 2000, in accordance with Standard Paragraph E at the end of this notice.

15. Rockingham Power, L.L.C.

[Docket No. ER00–3318–000]

Take notice that on July 31, 2000, Rockingham Power, L.L.C., tendered for filing a power sales agreement between Rockingham Power, L.L.C. and Duke Power, a Division of Duke Energy Corporation, to be in effect as of July 1, 2000.

Comment date: August 21, 2000, in accordance with Standard Paragraph E at the end of this notice.

16. MidAmerican Energy Company

[Docket No. ER00–3319–000]

Take notice that on July 31, 2000, MidAmerican Energy Company

(MidAmerican), 666 Grand Avenue, Des Moines, Iowa 50309 tendered for filing with the Commission a Service Agreement dated July 18, 2000 (Agreement) with Calpine Central, L.P. (Calpine) entered into pursuant to MidAmerican's Rate Schedule for Power Sales, FERC Electric Tariff, Original Volume No. 5 (Tariff).

MidAmerican requests an effective date of August 1, 2000 for this Agreement, and accordingly seeks a waiver of the Commission's notice requirement. MidAmerican has served a copy of the filing on Calpine, the Iowa Utilities Board, the Illinois Commerce Commission and the South Dakota Public Utilities Commission.

Comment date: August 21, 2000, in accordance with Standard Paragraph E at the end of this notice.

17. PPL Montana, LLC

[Docket No. ER00–3320–000]

Take notice that on July 31, 2000, PPL Montana, LLC (PPL Montana), tendered for filing with the Federal Energy Regulatory Commission a Power Sales Agreement between PPL Montana and Energy West Resources, Inc. (Energy West) under PPL Montana's Market-Based Rate Tariff, FERC Electric Tariff, Revised Volume No. 1.

PPL Montana requests an effective date of July 1, 2000 for the transaction confirmation.

PPL Montana states that a copy of this filing has been provided to Energy West.

Comment date: August 21, 2000, in accordance with Standard Paragraph E at the end of this notice.

18. Entergy Services, Inc.

[Docket No. ER00–3321–000]

Take notice that on July 31, 2000, Entergy Services, Inc., on behalf of Entergy Gulf States, Inc., tendered for filing an Interconnection and Operating Agreement with Hartburg Power, LP (Hartburg), and a Generator Imbalance Agreement with Hartburg.

Comment date: August 21, 2000, in accordance with Standard Paragraph E at the end of this notice.

19. PPL Montana, LLC

[Docket No. ER00–3323–000]

Take notice that on July 31, 2000, PPL Montana, LLC (PPL Montana), tendered for filing with the Federal Energy Regulatory Commission a Power Sales Agreement between PPL Montana and Commercial Energy of Montana, Inc. (Commercial Energy) under PPL Montana's Market-Based Rate Tariff, FERC Electric Tariff, Revised Volume No. 1.

PPL Montana requests an effective date of July 1, 2000 for the transaction confirmation.

PPL Montana states that a copy of this filing has been provided to Commercial Energy.

Comment date: August 21, 2000, in accordance with Standard Paragraph E at the end of this notice.

20. Northeast Utilities Service Company

[Docket No. ER00–3324–000]

Take notice that on July 31, 2000, Northeast Utilities Service Company (NUSCO), on behalf of The Connecticut Light and Power Company, tendered for filing pursuant to Section 205 of the Federal Power Act and Part 35 of the Commission's Regulations, a rate schedule reduction for sales of electricity to the Town of Wallingford, Department of Public Utilities and Connecticut Municipal Electric Energy Cooperative.

NUSCO states that a copy of this filing has been mailed to the Town of Wallingford, Department of Public Utilities, Connecticut Municipal Electric Energy Cooperative, and the Connecticut Department of Public Utility Control.

NUSCO requests that the rate schedule reduction become effective on August 1, 2000.

Comment date: August 21, 2000, in accordance with Standard Paragraph E at the end of this notice.

21. Northern Indiana Public Service Company

[Docket No. ER00–3325–000]

Take notice that on July 31, 2000, Northern Indiana Public Service Company (Northern Indiana), tendered for filing an executed Interconnection Agreement between Northern Indiana Public Service Company and Bio-Energy Partners.

Northern Indiana Public Service Company has requested waivers to permit the Service Agreement to become effective as of July 1, 2000.

Copies of this filing have been sent to Bio-Energy Partners, the Indiana Utility Regulatory Commission, and the Indiana Office of Utility Consumer Counselor.

Comment date: August 21, 2000, in accordance with Standard Paragraph E at the end of this notice.

22. Duke Energy Corporation

[Docket No. ER00–3326–000]

Take notice that on July 31, 2000, Duke Energy Corporation (Duke), tendered for filing a Service Agreement with H.Q. Energy Services (U.S.) Inc., for Non-Transmission Service under Duke's Open Access Transmission Tariff.

Duke requests that the proposed Service Agreement be permitted to become effective on July 12, 2000.

Duke states that this filing is in accordance with Part 35 of the Commission's Regulations and a copy has been served on the North Carolina Utilities Commission.

Comment date: August 21, 2000, in accordance with Standard Paragraph E at the end of this notice.

23. PJM Interconnection, L.L.C.

[Docket No. ER00–3327–000]

Take notice that on July 31, 2000, PJM Interconnection, L.L.C. (PJM), tendered for filing changes to Schedule 2 (Reactive Supply and Voltage Control from Generation Sources Service) of the PJM Open Access Transmission Tariff (PJM Tariff) to modify the methodology for determining the charges for, and distributing revenues related to, providing Reactive Supply and Voltage Control from Generation Sources Service.

Copies of this filing were served upon all members of PJM and each state electric utility regulatory commission in the PJM control area.

Comment date: August 21, 2000, in accordance with Standard Paragraph E at the end of this notice.

24. Commonwealth Edison Company

[Docket No. ER00–3344–000]

Take notice that on August 1, 2000, Commonwealth Edison Company (ComEd) tendered for filing an executed service agreement for East Kentucky Power Cooperative (EKPC) under ComEd's FERC Electric Market Based-Rate Schedule for power sales.

ComEd requests and effective date of July 26, 2000 for the service agreement and accordingly seeks waiver of the Commission's notice requirements.

Copies of this filing were served on EKPC.

Comment date: August 22, 2000, in accordance with Standard Paragraph E at the end of this notice.

25. Commonwealth Edison Company

[Docket No. ER00–3345–000]

Take notice that on August 1, 2000, Commonwealth Edison Company (ComEd) tendered for filing an executed service agreement for Amerada Hess Corporation (Amerada) under ComEd's FERC Electric Market Based-Rate Schedule for power sales.

ComEd requests an effective date of July 4, 2000 for the service agreement and accordingly seeks waiver of the Commission's notice requirements.

Copies of this filing were served on Amerada.

Comment date: August 22, 2000, in accordance with Standard Paragraph E at the end of this notice.

26. Allegheny Energy Service Corporation, on behalf of Allegheny Energy Supply Company LLC

[Docket No. ER00–3346–000]

Take notice that on August 1, 2000, Allegheny Energy Service Corporation on behalf of Allegheny Energy Supply Company, LLC (Allegheny Energy Supply Company), tendered for filing First Revised Service Agreement No. 79 to complete the filing requirement for one (1) new Customer of the Market Rate Tariff under which Allegheny Energy Supply offers generation services.

Allegheny Energy requests a waiver of notice requirements to make service available as of April 7, 2000 to Conectiv Energy Supply, Inc.

Copies of the filing have been provided to the Public Utilities Commission of Ohio, the Pennsylvania Public Utility Commission, the Maryland Public Service Commission, the Virginia State Corporation Commission, the West Virginia Public Service Commission, and all parties of record.

Comment date: August 22, 2000, in accordance with Standard Paragraph E at the end of this notice.

27. Allegheny Energy Service Corporation, on behalf of Allegheny Energy Supply Company LLC

[Docket No. ER00–3347–000]

Take notice that on August 1, 2000, Allegheny Energy Service Corporation on behalf of Allegheny Energy Supply Company, LLC (Allegheny Energy Supply Company) filed First Revised Service Agreement No. 65 to complete the filing requirement for one (1) new Customer of the Market Rate Tariff under which Allegheny Energy Supply offers generation services.

Allegheny Energy Supply maintains the effective date of Service Agreement No. 65 of March 28, 2000 for service to Florida Power & Light Company.

Copies of the filing have been provided to the Public Utilities Commission of Ohio, the Pennsylvania Public Utility Commission, the Maryland Public Service Commission, the Virginia State Corporation Commission, the West Virginia Public Service Commission, and all parties of record.

Comment date: August 22, 2000, in accordance with Standard Paragraph E at the end of this notice.

28. Delmarva Power & Light Company, Conectiv Delmarva Generation, Inc., Atlantic City Electric Company, Conectiv Atlantic Generation, LLC, and Conectiv Energy Supply, Inc.

[Docket No. ER00–3322–000]

Take notice that on July 31, 2000, Conectiv made a filing on behalf of its subsidiaries Delmarva Power & Light Company (Delmarva), Conectiv Delmarva Generation, Inc. (CDG), Atlantic City Electric Company (Atlantic), Conectiv Atlantic Generation, LLC (CAG) and Conectiv Energy Supply, Inc. (CESI) (collectively, the Conectiv Affiliates). Conectiv asks the Commission to eliminate the conditions on CESI's sales to Delmarva imposed in the Commission's April 25, 2000 order in Docket No. ER00–1770–000 and to waive the market-based rate codes of conduct for each of the Conectiv Affiliates.

Conectiv requests waiver of the Commission's notice requirements so that this filing be made effective on July 1, 2000.

Copies of the filing were served upon Delmarva's wholesale requirements customers and the Maryland People's Counsel, Maryland Public Service Commission, Delaware Public Service Commission, New Jersey Public Service Commission and the Virginia State Corporation Commission.

Comment date: August 21, 2000, in accordance with Standard Paragraph E at the end of this notice.

Standard Paragraphs

E. Any person desiring to be heard or to protest such filing should file a motion to intervene or protest with the Federal Energy Regulatory Commission, 888 First Street, N.E., Washington, D.C. 20426, in accordance with Rules 211 and 214 of the Commission's Rules of Practice and Procedure (18 CFR 385.211 and 385.214). All such motions or protests should be filed on or before the comment date. Protests will be considered by the Commission in determining the appropriate action to be taken, but will not serve to make protestants parties to the proceeding. Any person wishing to become a party must file a motion to intervene. Copies of these filings are on file with the Commission and are available for public inspection. This filing may also be viewed on the Internet at http://www.ferc.fed.us/online/rims.htm (call 202–208–2222 for assistance).

David P. Boergers,

Secretary.

[FR Doc. 00–20263 Filed 8–9–00; 8:45 am]

BILLING CODE 6717–01–U

DEPARTMENT OF ENERGY

Federal Energy Regulatory Commission

[Docket No. RM95–9–014]

Open Access Same-Time Information System and Standards of Conduct

Issued August 1, 2000.

AGENCY: Federal Energy Regulatory Commission.

ACTION: Order revising OASIS standards and communication protocols document adopted in Order No. 889 and announcement of availability.

SUMMARY: The Federal Energy Regulatory Commission (the Commission) adopts ''OASIS Standards and Communication Protocols Document (Version 1.4)'' that contains technical revisions to Version 1.3 of that same document. This document is available (see **ADDRESSES** below).

EFFECTIVE DATE: The requirements of this order will take effect January 8, 2001.

ADDRESSES: Copies of the OASIS Standards are available at the Office of the Secretary, Federal Energy Regulatory Commission, 888 First Street, NE., Washington, DC 20426. E-Mail address:''comment.rm@ferc.fed.us''.

FOR FURTHER INFORMATION CONTACT:

Marvin Rosenberg (Technical Information), Office of Markets, Tariffs, and Rates, Federal Energy Regulatory Commission, 888 First Street, NE., Washington, DC 20426, (202) 208–1283.

Paul Robb (Technical Information), Office of Markets, Tariffs, and Rates, Federal Energy Regulatory Commission, 888 First Street, NE., Washington, DC 20426, (202) 219–2702.

Gary D. Cohen (Legal Information), Office of the General Counsel, Federal Energy Regulatory Commission, 888 First Street, NE., Washington, DC 20426, (202) 208–0321.

SUPPLEMENTARY INFORMATION:

United States of America; Federal Energy Regulatory Commission

Before Commissioners: James J. Hoecker, Chairman; William L. Massey, Linda Breathitt, and Curt Hebert, Jr.; Open Access Same-Time Information System and Standards of Conduct

[Docket No. RM95–9–014]

Order Revising OASIS Standards and Communication Protocols Document Adopted in Order No. 889

Issued August 1, 2000.

I. Introduction

In this Order, the Commission adopts Version 1.4 of the OASIS Standards and Communication Protocols Document (S&CP Document, Version 1.4), consisting of revisions to Version 1.3 of that document. The Commission is adopting these changes after consideration of the comments filed in response to the notice of proposed changes issued in this proceeding on May 19, 2000. Open Access Same-Time Information System and Standards of Conduct, 65 FR 36283, FERC Stats. & Regs. ¶ 35,039 (2000) (May 19 Notice).[1]

II. Background

As explained in the May 19 Notice, the Commission first issued the S&CP Document (Version 1.0) on April 24, 1996, as a separate document that accompanied Order No. 889.[2] In Order No. 889, we announced that we would periodically update and revise the S&CP Document as needed.[3] On September 10, 1996, the Commission issued a revised S&CP Document (Version 1.1) in Open Access Same-Time Information System and Standards of Conduct, 76 FERC ¶ 61,243 (1996). On June 18, 1998, the Commission again issued a revised S&CP Document (Version 1.2) in Open Access Same-Time Information System and Standards of Conduct, 83 FERC ¶ 61,360 (1998). On September 29, 1998, the Commission issued a third revised S&CP Document (Version 1.3) in Open Access Same-Time Information System and Standards of Conduct, 84 FERC ¶ 61,329 (1998).

The May 19 Notice was published at 65 FR 36283, with comments due on or before July 7, 2000. Timely comments were filed by the OASIS How Working Group (How Group). These comments incorporate ideas that were also raised in a report jointly filed by the How Group and the Market Interface Committee (an industry group sponsored by the North American Electric Reliability Council (NERC)) on June 16, 2000 in response to requests made by the Commission to these industry working groups in Order No. 638.[4]

III. Discussion

The May 19 Notice proposed the following changes to Version 1.3 of the S&CP Document: (1) Post procedures associated with capacity benefit margin; (2) post references on curtailment information, interruptions, and system studies; (3) make modifications to the TRANSREQUEST template; (4) remove the TRANSALT, CURTAIL, and AUDIT templates; (5) add templates for SECURITY, REDUCTION, and SYSTEMDATA; (6) rename the SCHEDULE template as SCHEDULEDETAIL; (7) revise procedures for posting information in the TRANSOFFERING template; (8) add a unique reference to continuation records; (9) revise OASIS performance response times (section 5.3) to add specific required response times; and (10) issue corrections to support the above changes and update the table of contents.

In addition, the May 19 Notice explained that further changes might be needed to reflect the Commission's findings in Order No. 638. Thus, comments were invited on both the merits of the proposed revisions to the S&CP Document as well as on the following:

1. If we adopt the proposed revisions to the S&CP Document, are changes needed to reflect our findings in Order No. 638?

2. Specifically, do any provisions of the proposed S&CP revisions conflict with provisions of Order No. 638? If so, how should those conflicts be resolved?

3. With regard to section 4.3.4.4 on System Data (Recommended S&CP Document Version 1.4 at page 55), this section states that a transmission provider is obligated to post values for one or more of the defined system attributes, but does not state that all system attributes can be requested at the same time. We therefore request comment on whether the description of the template in section 4.3.4.4 should be revised to clarify that all system attributes can be requested at the same time.

4. With regard to section 5.3.3 on Measurement Criteria for OASIS Node Functions (Recommended S&CP Document Version 1.4 at page 108), we see three possible problems. First, section 5.3.3, as recommended, provides performance standards (time limits) for responding to queries regarding TRANSSTATUS and TRANSOFFERING. It does not establish comparable requirements regarding response times for any other queries. We therefore invite comment on whether the proposed performance standards meet customer needs today and for the near term future.

Second, we also note that the recommended performance standards in section 5.3.3 are so specific that they may become obsolete and fail to keep pace with changing technology, market conditions, and user needs. We therefore invite comment on whether it would be preferable to adopt a more general performance standard, such as one that would require a node's response to be sufficient to meet the legitimate needs of its customers.

Third, we also would be open to consideration of other possible revisions to section 5.3.3 that might contain a novel approach preferable to either that proposed in this Notice or that contained in Version 1.3.[5]

The sole comments filed in response to the May 19 Notice were those filed by the How Group. The How Group's comments address questions 1 and 2 above by offering a new section 4.2.10.4 to clarify how comment attributes are to be used, as well as offering suggested revisions to sections 4.2.10, 4.2.13.6, 4.2.13.7, 4.3.6.3 and Data Element Dictionary attributes ''CUSTOMER__COMMENTS,'' ''SELLER__COMMENTS,'' ''PRIMARY__PROVIDER__COMMENTS,'' AND ''STATUS__COMMENTS'' to add more characters, adding attributes ''COMPETING__REQUEST__FLAG,'' ''SELLER__ REF,'' and revising the attributes ''NERC__CURTAILMENT__PRIORITY,'' ''POINT__ OF__RECEIPT/POINT__OF__DELIVERY,'' and ''TS__WINDOW.''

As to question 3 above, the How Group's comments explain that ''if the variable SYSTEM__ATTRIBUTE is not provided in the query template SYSTEMDATA then all system attributes will be requested and provided in the response.'' If a query does not provide a given query variable, then information will be provided

[1] The May 19 Notice originally was issued as a notice of proposed rulemaking (NOPR). It later was determined that a notice would be more appropriate than a NOPR because the document did not propose any changes in the Commission's regulations. Thus, an errata notice was issued on June 7, 2000, relabeling the NOPR as a notice, and the May 19 Notice was published in the **Federal Register** on that same day.

[2] See Open Access Same-Time Information System and Standards of Conduct, Order No. 889, 61 FR 21737 (May 10, 1996), FERC Stats. & Regs. ¶ 31,035 at 31,586 (April 24, 1996), *order on reh'g,* Order No. 889–A, 62 FR 12484 (March 14, 1997), FERC Stats. & Regs. ¶ 31,049 (March 4, 1997), *order on reh'g,* Order No. 889–B, 81 FERC ¶ 61,253 (1997), *order on reh'g,* Order No. 889–C, 82 FERC ¶ 61,046 (1998).

[3] Order No. 889, FERC Stats. & Regs. ¶ 31,035 at 31,591.

[4] Open Access Same-Time Information System and Standards of Conduct, Order No. 638, FERC Stats. & Regs. ¶ 31,093 (2000).

[5] Notes omitted, May 19 Notice at 35,201–202.

without regard to that variable. This comment does not necessitate or request any revisions to the S&CP Document.

As to the questions above concerning section 5.3.3 of the BPS, the How Group stands by the performance standards proposed in the May 19 Notice. It argues that these performance standards should be adopted now and can later be modified if new technology becomes available that would make them obsolete.

In Open Access Same-Time Information System and Standards of Conduct, Order No. 605, FERC Stats. & Regs. ¶ 31,075 (1999), the Commission stressed the importance of providing customers with information on curtailments.[6] The MIC/How Groups responded to this concern by submitting comments on September 23, 1999 (September 23 Filing) in Docket No. RM98–3–000 suggesting that the S&CP Document should be revised to include a new scheduling template ''SCHEDULEDETAIL'' that incorporates information previously supplied in the ''CURTAILMENT'' template. The September 23 Filing argued that a seven-day lag should be permitted before this information is posted based on concerns over the commercial sensitivity of the underlying information and because the Commission's regulation at 18 CFR 37.6(f) already provides a seven-day lag prior to the posting of information on transmission service schedules. Notice of the September 23 Filing was issued on October 6, 1999, inviting comments on or before November 8, 1999. None was filed.

Although not separately reiterated in the cover letter accompanying the January 31, 2000 submittal from the MIC/How Groups, which was the basis for much of the May 19 Notice, the revised templates were included in the S&CP Document, Version 1.4 proposed in the May 19 Notice and set out in Attachment A to that document. On review of this matter, we will accept the suggested seven-day lag before posting because this lag is already permitted with regard to much of the information and because the lag should not interfere with the review of this information by customers and the Commission to detect discriminatory practices. However, we make no finding as to the claim that this information is commercially sensitive and our decision does not rely on that argument.

Finally, in addition to the changes recommended by the MIC/How Groups, we will take this opportunity to correct two typographical errors that we have discovered in the S&CP Document. In Section 4.2.12 and in the Data Dictionary under ANC_SVC_LINK we are changing ''ANC_SVC_TYPE'' to ''AS_TYPE.'' This change is reflected in the revised S&CP Document, which is available at an address under **ADDRESSES**.

IV. Effective Date and Congressional Notification

The How Group has requested that the industry be given six months to prepare for the implementation of Version 1.4 of the S&CP Document before it becomes effective. Based on the assumption that there will probably be a lag of thirty days between adoption of this order by the Commission and its publication in the **Federal Register**, we will direct that Version 1.4 of the S&CP Document will take effect 150 days from the publication of this order in the **Federal Register**.

The Commission has determined, with the concurrence of the Administrator of the Office of Information and Regulatory Affairs of the Office of Management and Budget, that this order does not constitute a ''major rule'' within the meaning of section 351 of the Small Business Regulatory Enforcement Act of 1996. The Commission will submit this order to both houses of Congress and the Comptroller General prior to its publication in the **Federal Register**.

The Commission orders:

The revised S&CP Document (Version 1.4) is hereby adopted for use by Transmission Providers, to become effective on January 8, 2001, as discussed in the body of this order.

By the Commission.

David P. Boergers,

Secretary.

[FR Doc. 00–19974 Filed 8–9–00; 8:45 am]

BILLING CODE 6717–01–P

[6] FERC Stats. & Regs. ¶ 31,075 at 30,482.

DEPARTMENT OF ENERGY

Federal Energy Regulatory Commission

[Docket No. RM95–9–013]

Open Access Same-Time Information System and Standards of Conduct

Issued August 1, 2000.

AGENCY: Federal Energy Regulatory Commission (Commission).

ACTION: Order seeking comments on proposed changes to ''Business Practice Standards for OASIS Transactions'' (BPS Document).

SUMMARY: The Commission is considering revising the BPS Document adopted by the Commission on February 25, 2000 in *Open Access Same-Time Information System and Standards of Conduct*, Order No. 638, FERC Stats. & Regs. ¶ 31,093 (2000). The Commission invites comments on these proposed revisions.

DATES: Written comments (an original and 14 paper copies) must be received by September 11, 2000. In addition, the Commission encourages the filing of a copy of the comments on computer diskette or by E-Mail to ''comment.rm@ferc.fed.us'' by the same date.

ADDRESSES: Copies of the BPS Document are available at the Office of the Secretary, Federal Energy Regulatory Commission, 888 First Street, NE., Washington, DC 20426. E-Mail address: ''comment.rm@ferc.fed.us''.

FOR FURTHER INFORMATION CONTACT:

Marvin Rosenberg (Technical Information), Office of Markets, Tariffs, and Rates, Federal Energy Regulatory Commission, 888 First Street, NE., Washington, DC 20426, (202) 208–1283.

Paul Robb (Technical Information), Office of Markets, Tariffs, and Rates, Federal Energy Regulatory Commission, 888 First Street, NE., Washington, DC 20426, (202) 219–2702.

Gary D. Cohen (Legal Information), Office of the General Counsel, Federal Energy Regulatory Commission, 888 First Street, NE., Washington, DC 20426, (202) 208–0321.

SUPPLEMENTARY INFORMATION:

Before Commissioners: James J. Hoecker, Chairman; William L. Massey, Linda Breathitt, and Curt Hubert, Jr.

Order Seeking Comments on Proposed Changes to ''Business Practice Standards for Oasis Transactions''

I. Introduction

The Commission is considering making revisions to the ''Business Practice Standards for OASIS Transactions'' (BPS) adopted by the Commission on February 25, 2000 in *Open Access Same-Time Information System and Standards of Conduct*, Order No. 638, FERC Stats. & Regs. ¶ 31,093 (2000) to reflect, with minor edits by the Commission, suggested revisions jointly recommended by the OASIS How Working Group (How Group) and the Market Interface Committee (MIC) (jointly MIC/How Groups). We, therefore, are inviting comments on these suggested changes, as edited by the Commission. We intend to issue a revised BPS document, after

a review of any comments filed, unless persuaded otherwise.

II. Background

In Order No. 638, the Commission adopted a set of uniform business practices (*i.e.,* the BPS), implementing the Commission's policies on transmission service price negotiations and on improving interactions between transmission providers and customers over Open Access Same-Time Information System (OASIS) sites. Order No. 638 also contained a number of requests to the MIC/How Groups,[1] including a request that the MIC/How Groups submit a report to the Commission, by June 29, 2000,[2] providing recommendations for revisions to the BPS to reflect the Commission's findings in *North American Electric Reliability Council*, 89 FERC ¶ 61,277 (1999) (Next Hour Order), *reconsideration denied*, 92 FERC ¶ 61,012 (2000), and to consider specified changes related to the State Diagram.[3]

On June 16, 2000, the MIC/How Groups jointly submitted for Commission consideration recommended revisions to the BPS. In this order, we are inviting comment on whether the Commission should adopt the recommended revisions to the BPS suggested by the MIC/How Group, as edited by the Commission (these edits are discussed below).

III. Discussion

In response to our request in Order No. 638, the June 16, 2000 submittal recommends a series of minor revisions to the BPS,[4] including: (1) Revised definitions of the scheduling period for ''same-day'' and ''next-hour'' transactions in BPS section 2.6.1; (2) designation in Table 1–1 of Next Hour Market Service (NHM Service) as a standard product (leaving the definition of this product to each transmission provider's Open Access Transmission Tariff); (3) revisions to Tables 4–2 and 4–3 and related provisions to reflect the availability of NHM Service and its priority vis a vis other transmission services; (4) revisions to Standards 4.8, 4.17, 5.4, and addition of a new Standard 4.2.7, to reflect recommended clarifications of applicable comment fields; (5) revisions to Standards 3.3, 3.6, 4.1, 4.13, 4.15, 4.20, 4.24, 4.25, and 5.5 (by changing the word ''should'' to ''shall'' to reflect that these standards were made mandatory in Order No. 638; and (6) the addition of a new section 7, providing 16 new business practices covering NHM Service.[5]

The MIC/How Group also points out that, for clarity, Table 1–1 should be redesignated as Table 2–1. Finally, the MIC/How Group suggests changes to the S&CP Document and Data Element Dictionary that we will address separately when we consider making further revisions to those documents.

We appreciate the ongoing efforts of the MIC/How Groups to voluntarily address the Commission's questions and to try to reach consensus on these issues. Subject to our review of any comments that are filed in response to this Order, we propose to adopt the revisions to the BPS as recommended by the MIC/How Groups, with the exceptions discussed below. First, the MIC/How Groups' proposed Section 7.2 states:

> Standard 7.2: A transmission provider offering NHM Service shall allow an eligible transmission customer to request a NHM Service reservation electronically using protocols compliant with NERC ETAG Specification 1.6 or later.

We will revise this standard to delete the words ''or later'' from the end of the sentence. The Commission is reluctant to approve future business practices before they are developed. Although we find NERC's current ETAG procedures acceptable, *see, e.g., Allegheny Energy Service Corporation,* 91 FERC ¶ 61,044 at 61,160–61 (2000), we reserve judgment on any revised ETAG specifications that may be developed in the future.

Second, we also will correct two typographical errors in the recommended BPS, Version 1.2. First, we will correct the spelling of ''http'' in the reference to the TSIN Website in Standard 3.2. Second, we will remove, as redundant, the word ''set'' that follows the word ''consider'' in the first sentence of Standard 7.5. Thus, this phrase would read ''[a] transmission provider offering NHM Service shall consider the amount . . .''

Subject to our review of any comments filed in response to this order, we intend to adopt a revised BPS Document, Version 1.2.[6]

IV. Public Comment Procedure

This order explains our intention to make certain technical revisions to the BPS. Prior to taking final action on this proposal, we are inviting comments from interested persons on the proposals discussed in this order. The Commission invites interested persons to submit written comments on the proposed revisions to the BPS described in this order, including any related matters or alternative proposals that commenters may wish to discuss.

The original and 14 copies of such comments must be received by the Commission by September 11, 2000. Comments should be submitted to the Office of the Secretary, Federal Energy Regulatory Commission, 888 First Street, NE., Washington DC 20426 and should refer to Docket No. RM95–9–013.

In addition to filing paper copies, the Commission encourages the filing of comments either on computer diskette or via Internet E-Mail. Comments may be filed in the following formats: WordPerfect 8.0 or lower version, MS Word Office 97 or lower version, or ASCII format.

For diskette filing, include the following information on the diskette label: Docket No. RM95–9–013; the name of the filing entity; the software and version used to create the file; and the name and telephone number of a contact person.

For Internet E-Mail submittal, comments should be submitted to ''comment.rm@ferc.fed.us'' in the following format. On the subject line, specify Docket No. RM95–9–013. In the body of the E-Mail message, include the name of the filing entity; the software and version used to create the file, and the name and telephone number of the contact person. Attach the comment to the E-Mail in one of the formats specified above. The Commission will send an automatic acknowledgment to the sender's E-Mail address upon receipt. Questions on electronic filing should be directed to Brooks Carter by

[1] *See* Order No. 638, FERC Stats. & Regs. ¶ 31,093 at 31,448–49.

[2] Ninety days from March 31, 2000, the date of publication of Order No. 638 in the **Federal Register**.

[3] *See* section 4.2.10.2 of the OASIS Standards and Communication Protocols Document (S&CP Document).

[4] The MIC/How Groups have suggested revisions to the following BPS Sections, Standards, and Tables: Section 2.1; Standard 2.1; Standard 2.1.14; Standard 2.6.1; Standard 2.6.2; Standard 3.6; Standard 4.1; Standard 4.8; Standard 4.13; Notes to Table 4–2; Standard 4.14; Standard 4.15; Table 4–3; Standard 4.17; Standard 4.20; Standard 4.24; Standard 4.25; Standard 4.27; Standard 5.4; Standard 5.5; and a new Section 7 with 16 new standards (Standards 7.1–7.16).

[5] The business practices recommended in Section 7 would define NHM Service and list it as a voluntary service that, if provided, must be provided in accordance with Standards 7.1–7.16. Among other matters, these standards set the time limits for such transactions, require North American Electric Reliability Council (NERC) electronic tags (ETAGS) for reserving and designating such service, and discuss procedures for reserving such service, identifying path segments, and curtailing such service.

[6] For clarity, the BPS Document uses redline and strikeout fonts to highlight differences between BPS Version 1.1 (the version adopted in Order No. 638) and Version 1.2 (the version proposed in this order). Copies of the BPS Document are available at an address under **ADDRESSES.**

telephone at 202–501–8145 or by E-Mail (to brooks.carter@ferc.fed.us).

Commenters should take note that, until the Commission amends its rules and regulations, the paper copy of the filing remains the official copy of the document submitted. Therefore, any discrepancies between the paper filing and the electronic filing or the diskette will be resolved by reference to the paper filing.

The Commission Orders

Interested persons may file comments on the proposed revisions to the ''Business Practice Standards for OASIS Transactions'' (BPS) within thirty (30) days of the date of publication of this order in the **Federal Register**, as discussed in the body of this order.

By the Commission.

David P. Boergers,

Secretary.

[FR Doc. 00–19975 Filed 8–9–00; 8:45 am]

BILLING CODE 6717–01–P

DEPARTMENT OF ENERGY

Federal Energy Regulatory Commission

Notice of Application to Amend License, and Soliciting Comments, Motions To Intervene, and Protests

August 4, 2000.

a. *Application Type:* Application to amend the license.

b. *Project No:* P–10228.

c. *Date Filed:* April 7, 2000.

d. *Applicant:* Cannelton Hydroelectric Project, L.P.

e. *Name of Project:* Cannelton Hydroelectric Project.

f. *Location:* The Project would be located at the existing U.S. Army Corps of Engineers' Cannelton Lock and Dam on the Ohio River in Hancock County, Kentucky. The project utilizes a federal dam.

g. *Filed Pursuant to:* Federal Power Act, 16 U.S.C. 791(a)–825(r).

h. *Applicant Contact:* Cannelton Hydroelectric Project, L.P., 120 Calumet Court, Aiken S.C. 29803. Tel: (803) 642–2749.

i. *FERC Contact:* Any questions on this notice should be addressed to Ms. Monica Maynard at (202) 219–2652 or by e-mail at monica.maynard@ferc.fed.us.

j. *Deadline for filing comments and/or motions:* September 8, 2000.

All documents (original and eight copies) should be filed with: Davis P. Boergers, Secretary, Federal Energy Regulatory Commission, 888 First Street, NE., Washington, DC 20426.

Please include the project number (P–10228–013) on any comments or motions filed.

k. *Description of Filing:* Cannelton Hydroelectric Project, L.P., (Cannelton) proposes to change the dissolved oxygen criteria to be met in the river downstream from the project during project operation required under license article 402.

l. *Location of the Application:* A copy of the application is available for inspection and reproduction at the Commission's Public Reference Room, located at 888 First Street, NE., Room 2A, Washington, DC 20426, or by calling (202) 208–1371. This filing may be viewed on http://www.ferc.fed.us/online/rims.htm [call (202) 208–2222 for assistance]. A copy is also available for inspection and reproduction at the address in item h above.

m. Individuals desiring to be included on the Commission's mailing list should so indicate by writing to the Secretary of the Commission.

Comments, Protests, or Motions to Intervene—Anyone may submit comments, a protest, or a motion to intervene in accordance with the requirements of Rules of Practice and Procedure, 18 CFR 385.210, 385.211, 385.214. In determining the appropriate action to take, the Commission will consider all protests or other comments filed, but only those who file a motion to intervene in accordance with the Commission's Rules may become a party to the proceeding. Any comments, protests, or motions to intervene must be received on or before the specified comment date for the particular application.

Filing and Service Responsive Documents—Any filing must bear in all capital letters the title ''COMMENTS'', ''RECOMMENDATIONS FOR TERMS AND CONDITIONS,'' ''PROTEST'', OR ''MOTION TO INTERVENE'', as applicable, and the Project Number of the particular application to which the filing refers. Any of the above-named documents must be filed by providing the original and the number of copies provided by the Commission's regulations to: The Secretary, Federal Energy Regulatory Commission, 888 First Street, NE., Washington, DC 20426. A copy of any motion to intervene must also be served upon each representative of the Applicant specified in the particular application.

Agency Comments—Federal, state, and local agencies are invited to file comments on the described application. A copy of the application may be obtained by agencies directly from the Applicant. If an agency does not file comments within the time specified for filing comments, it will be presumed to have no comments. One copy of an agency's comments must also be sent to the Applicant's representatives.

David P. Boergers,

Secretary.

[FR Doc. 00–20201 Filed 8–9–00; 8:45 am]

BILLING CODE 6717–01–M

DEPARTMENT OF ENERGY

Federal Energy Regulatory Commission

Notice of Scoping Meeting

August 4, 2000.

Take notice that the following hydroelectric application has been filed with the Commission and is available for public inspection:

a. *Type of Application:* A New Major License.

b. *Project No.:* 2042–013.

c. *Date filed:* January 21, 2000.

d. *Applicant:* Public Utility District No. 1 of Pend Oreille County.

e. *Name of Project:* Box Canyon Hydroelectric Project.

f. *Location:* On the Pend Oreille River, in Pend Oreille County, Washington and Bonner County, Idaho. About 709 acres within the project boundary are located on lands of the United States, including Kalispel Indian Reservation (493 acres), U.S. Forest Service Colville National Forest (182.93 acres), U.S. Department of Energy, Bonneville Power Administration (24.14 acres), U.S. Fish and Wildlife Service (2.45 acres), U.S. Army Corps of Engineers (5.29 acres), and U.S. Bureau of Land Management (1.44 acres).

g. *Filed Pursuant to:* Federal Power Act, 16 USC 791(a)–825(r).

h. *Applicant Contact:* Mr. Mark Cauchy, Public Utility District No. 1 of Pend Oreille County, P.O. Box 190, Newport, WA 99156; (509) 447–9331.

i. *FERC Contact:* Mr. Timothy J. Welch, *Timothy.Welch@FERC.FED.US* or telephone (202) 219–2666.

j. Deadline for filing scoping comments is September 12, 2000.

All documents (original and eight copies) should be filed with: David P. Boergers, Secretary, Federal Energy Regulatory Commission, 888 First Street, NE, Washington, DC 20426.

The Commission's Rules of Practice and Procedure require all intervenors filing documents with the Commission to serve a copy of that document on each person whose name appears on the official service list for the project. Further, if an intervenor files comments or documents with the Commission relating to the merits of an issue that

may affect the responsibilities of a particular resource agency, they must also serve a copy of the document on that resource agency.

k. *Status of environmental analysis:* This application is not ready for environmental analysis at this time.

l. *Description of the Project:* The Box Canyon Project is located in the northeast corner of Washington state in Pend Oreille County. The project dam is located at river mile 34.4 from the Pend Oreille River's confluence with the Columbia River. The site is 13 miles from the Canadian border, 14 miles from the Idaho border, and 90 miles north of the city of Spokane, WA. The existing Box Canyon Project consists of: (1) 46-foot-high, 160-foot-long reinforced concrete dam with integral spillway, (2) 217-foot-long, 35-foot-diameter diversion tunnel, (3) 1,170-foot-long forebay channel, (4) auxiliary spillway, (5) powerhouse containing four generating units with a combined capacity of 72 MW, (6) 8,850-acre reservoir at maximum operating pool elevation of 2030.6 feet, and other associated facilities. PUD No. 1 operates the project in a run-of-river mode.

PUD No. 1 proposes to upgrade all four turbines with new high efficiency, fish-friendly runners and to rewind the four generators to increase generating capacity to 90 MW. No new structures will be built and no construction in the river will be required. No operational changes will be needed although peak flow through each turbine will be increased from 6,850 cfs to 8,100 cfs which will ultimately result in an 8% increase in average annual energy output.

m. *Locations of the application:* A copy of the application is available for inspection and reproduction at the Commission's Public Reference Room, located at 888 First Street, NE, Room 2A, Washington, DC 20246, or by calling (202) 208–1371. This filing may be viewed on the web at http://www.ferc.fed.us/online/rims.htm [or call (202) 208–2222 for assistance]. A copy is also available for inspection and reproduction at the address in item h. above.

Scoping Process

The Commission intends to prepare an Environmental Impact Statement (EIS) for the proposed relicensing of the Box Canyon Hydroelectric Project (FERC No. 2042–013) The EIS will consider both site-specific and cumulative environmental impacts and reasonable alternatives to the proposed action.

Scoping Meeting

In addition to the two scoping meetings on August 14th and August 16th identified in the July 14, 2000 Notice, a third meeting will be held at 9:00 am on August 17, 2000 in the Kalispel Tribal Council Chambers at 1981 North Le Clair St, Usk, WA. This meeting will focus on the concerns of the Kalispel Tribe to assist the staff in identifying the scope of the environmental issues that should be analyzed in the EIS.

To facilitate discussions, a Scoping Document (SDI) outlining the subject areas to be addressed in the EIS, was previously distributed to parties on the Commission's mailing list.

Objectives

At this meeting, the staff will: (1) Summarize the environmental issues tentatively identified for analysis in the EIS; (2) solicit from the participants all available information, especially quantifiable data, on the resources at issue; (3) encourage statements from interested parties on issues that should be analyzed in the EIS, including viewpoints in opposition to, or in support of, the staff's preliminary views; (4) determine the resource issues to be addressed in the EIS; and (5) identify those issues that require a detailed analysis, as well as those issues that do not require a detailed analysis.

Procedures

If you are interested in attending this meeting, please contact Leslie Smythe at (781) 444–3331 ext. 481 before August 15, 2000.

David P. Boergers,

Secretary.

[FR Doc. 00–20202 Filed 8–9–00; 8:45 am]

BILLING CODE 6717–01–M

ENVIRONMENTAL PROTECTION AGENCY

[FRL–6848–7]

Proposed CERCLA Section 122(h) Administrative Agreement for Recovery of Past Costs for the Genzale Plating Superfund Site, Franklin Square, Nassau County, NY

AGENCY: Environmental Protection Agency.

ACTION: Notice; request for public comment.

SUMMARY: In accordance with section 122(i) of the Comprehensive Environmental Response, Compensation, and Liability Act of 1980, as amended (''CERCLA''), 42 U.S.C. 9622(i), notice is hereby given by the U.S. Environmental Protection Agency (''EPA''), Region II, of a proposed administrative agreement pursuant to section 122(h) of CERCLA, 42 U.S.C. 9622(h), for recovery of past response costs concerning the Genzale Plating Superfund Site (''Site'') located in Franklin Square, Nassau County, New York, with three parties: M. Genzale Plating Company, Inc. (''Genzale''), Michael J. Genzale, and Michael F. Genzale. The agreement is an ''ability to pay'' settlement. Under the settlement, respondents, who are closing the business at the Site, agree to sell the facility property and convey the net proceeds of the sale into an escrow account. They also agree to pay $505,000 into the escrow account, which is to be used for, *inter alia,* environmental expenses attendant to properly shutting the business' facility. The remaining funds in the escrow account will be paid to the United States. Because the price of the property and the amount of expenses are not currently known, the ultimate amount which the United States will receive from the settlement is also not known, but is likely to exceed $500,000. For thirty (30) days following the date of publication of this notice, EPA will receive written comments relating to the settlement. EPA will consider all comments received and may modify or withdraw its consent to the settlement if comments received disclose facts or considerations that indicate that the proposed settlement is inappropriate, improper, or inadequate. EPA's response to any comments received will be available for public inspection at the EPA, Region II, 290 Broadway, New York, New York 10007–1866.

DATES: Comments must be submitted on or before September 11, 2000.

ADDRESSES: The proposed settlement is available for public inspection at the EPA, 290 Broadway, New York, New York 10007–1866. Comments should reference the Genzale Plating Superfund Site located in Franklin Square, Nassau County, New York, Docket No. CERCLA–02–2000–2010. A copy of the proposed settlement may be obtained from the individual listed below.

FOR FURTHER INFORMATION CONTACT: James F. Doyle, Assistant Regional Counsel, New York/Caribbean Superfund Branch, Office of Regional Counsel, U.S. Environmental Protection Agency, 17th Floor, 290 Broadway, New York, New York 10007–1866. Telephone: 212–637–3165.

Dated: July 31, 2000

William J. Muscynski,

Acting Regional Administrator, Region 2.

[FR Doc. 00–20320 Filed 8–9–00; 8:45 am]

BILLING CODE 6560–50–P

FEDERAL COMMUNICATIONS COMMISSION

Notice of Public Information Collection(s) Being Reviewed by the Federal Communications Commission, Comments Requested

August 4, 2000.

SUMMARY: The Federal Communications Commission, as part of its continuing effort to reduce paperwork burden invites the general public and other Federal agencies to take this opportunity to comment on the following information collection, as required by the Paperwork Reduction Act of 1995, Public Law 104–13. An agency may not conduct or sponsor a collection of information unless it displays a currently valid control number. No person shall be subject to any penalty for failing to comply with a collection of information subject to the Paperwork Reduction Act (PRA) that does not display a valid control number. Comments are requested concerning (a) whether the proposed collection of information is necessary for the proper performance of the functions of the Commission, including whether the information shall have practical utility; (b) the accuracy of the Commission's burden estimate; (c) ways to enhance the quality, utility, and clarity of the information collected; and (d) ways to minimize the burden of the collection of information on the respondents, including the use of automated collection techniques or other forms of information technology.

DATES: Written comments should be submitted on or before October 10, 2000. If you anticipate that you will be submitting comments, but find it difficult to do so within the period of time allowed by this notice, you should advise the contact listed below as soon as possible.

ADDRESSES: Direct all comments to Les Smith, Federal Communications Commissions, 445 12th Street, S.W., Room 1-A804, Washington, DC 20554 or via the Internet to lesmith@fcc.gov.

FOR FURTHER INFORMATION CONTACT: For additional information or copies of the information collections contact Les Smith at (202) 418–0217 or via the Internet at lesmith@fcc.gov.

SUPPLEMENTARY INFORMATION:

OMB Control No.: 3060–0684

Title: Amendment to the Commission's Rules Regarding a Plan for Sharing the Costs of Microwave Relocation.

Form No.: N/A.

Type of Review: Extension and revision of a currently approved collection.

Respondents: Business or other for-profit institutions (Personal Communications Services providers and Fixed Microwave Service providers), not-for-profit institutions (associations representing providers listed above); public safety agencies.

Number of Respondents: Existing collection approval—2,000 industry respondents submitting information to each other and to the clearinghouses, 1 industry respondent serving as the clearinghouse; *Additional collection*—20 (of the 2000) industry respondents hiring third-party appraisers; 1 industry respondent serving as another clearinghouse.

Estimated Time Per Response: Existing collection approval—.875 hours for the 2000 respondents, 40 hours for the clearinghouse; *Additional collection*—8 hours for the 20 third-party appraisers, 15,125 hours (annual) for a second clearinghouse, and 15,125 hours (annual) for the existing clearinghouse.

Frequency of Response: On occasion reporting requirement for the 2000 respondents and the 20 third-party appraisers; biannual reporting requirement and yearly operation and recordkeeping for the two clearinghouses.

Total Annual Burden: 32,200 hours (1790 existing collection approval, 30,410 additional collection).

Total Annual Cost: $862,000 ($180,000 existing collection approval, $682,000 additional collection).

Needs and Uses: The information collections in this proceeding are necessary to effectuate the relocation of fixed microwave incumbents from the 2 GHz band to clear spectrum for the development of PCS. In addition, the collections are necessary to effectuate the Commission's plan for PCS relocators and subsequent PCS licensees to share the costs of relocating existing 2 GHz microwave facilities, thus providing for a fair and efficient relocation process. The information is used by: 2000 respondents to negotiate relocation costs and submit relocation information to the clearinghouses; and two clearinghouses to determine the reimbursement obligations owed by later-entrant PCS entities. This information collection revises a collection approved by the Office of Management and Budget (OMB) on August 19, 1996, which revised the new collection that was approved by OMB on December 31, 1995. In particular, this information collection makes the following additions to the currently-approved collection: (1) reflects an additional burden of independent third party appraisal of the relocation costs for self-relocating incumbents; (2) reflects a new estimate of the burden on industry to set up and maintain the clearinghouses.

Federal Communications Commission.

Magalie Roman Salas,

Secretary.

[FR Doc. 00–20270 Filed 8–9–00; 8:45 am]

BILLING CODE 6712–01–P

FEDERAL COMMUNICATIONS COMMISSION

Notice of Public Information Collection(s) Being Reviewed by the Federal Communications Commission

August 3, 2000.

SUMMARY: The Federal Communications Commission, as part of its continuing effort to reduce paperwork burden invites the general public and other Federal agencies to take this opportunity to comment on the following information collection(s), as required by the Paperwork Reduction Act of 1995, Public Law 104–13. An agency may not conduct or sponsor a collection of information unless it displays a currently valid control number. No person shall be subject to any penalty for failing to comply with a collection of information subject to the Paperwork Reduction Act (PRA) that does not display a valid control number. Comments are requested concerning (a) whether the proposed collection of information is necessary for the proper performance of the functions of the Commission, including whether the information shall have practical utility; (b) the accuracy of the Commission's burden estimate; (c) ways to enhance the quality, utility, and clarity of the information collected; and (d) ways to minimize the burden of the collection of information on the respondents, including the use of automated collection techniques or other forms of information technology.

DATES: Written comments should be submitted on or before September 11, 2000. If you anticipate that you will be submitting comments, but find it difficult to do so within the period of time allowed by this notice, you should advise the contact listed below as soon as possible.

ADDRESSES: Direct all comments to Judy Boley, Federal Communications Commission, Room 1-—C804, 445 12th Street, SW, DC 20554 or via the Internet to jboley@fcc.gov.

FOR FURTHER INFORMATION CONTACT: For additional information or copies of the information collection(s), contact Judy Boley at 202–418–0214 or via the Internet at jboley@fcc.gov.

SUPPLEMENTARY INFORMATION: *OMB Control No.*: 3060–0893.

Title: Universal Licensing Service (ULS) Pre-Auction Database Corrections.

Form No.: N/A.

Type of Review: Extension of a currently approved collection.

Respondents: Individuals or households, businesses or other for-profit, not-for-profit institutions, and state, local or tribal governments.

Number of Respondents: 4,442 respondents, 21,000 responses.

Estimated Time Per Response: .50 hours.

Frequency of Response: On occasion reporting requirement.

Total Annual Burden: 10,500 hours.

Total Annual Cost: N/A.

Needs and Uses: This collection is necessary to ensure that the ULS database is as accurate as possible. It involves the correction of licensing data errors detected through integrity reports obtained by searching the ULS database. This data must be corrected to prepare for specific auctions of certain radio services that have been placed in the ULS but have not yet been auctioned. This data aids in spectrum management and provides for an efficient graphical user interface for each potential auction participant.

Federal Communications Commission.

Magalie Roman Salas,

Secretary.

[FR Doc. 00–20271 Filed 8–9–00; 8:45 am]

BILLING CODE 6712–01–P

FEDERAL DEPOSIT INSURANCE CORPORATION

Sunshine Act; Notice of Agency Meeting

Pursuant to the provisions of the ''Government in the Sunshine Act'' (5 U.S.C. 552b), notice is hereby given that the Federal Deposit Insurance Corporation's Board of Directors will meet in open session at 11:15 a.m. on Monday, August 14, 2000, to consider the following matters:

Summary Agenda: No substantive discussion of the following items is anticipated. These matters will be resolved with a single vote unless a member of the Board of Directors requests that an item be moved to the discussion agenda.

Disposition of minutes of previous Board of Directors' meetings.

Summary reports, status reports, and reports of actions taken pursuant to authority delegated by the Board of Directors.

Discussion Agenda:

Memorandum and resolution re: Proposed Amendment to Part 325, Capital Maintenance, Regarding the Capital Treatment of Residual Interests in Asset Securitizations or Other Transfers of Financial Assets.

Memorandum and resolution re: Proposed Regulation Regarding Consumer Protections for Bank Sales of Insurance.

The meeting will be held in the Board Room on the sixth floor of the FDIC Building located 550—17th Street, N.W., Washington, DC.

The FDIC will provide attendees with auxiliary aids (e.g., sign language interpretation) required for this meeting. Those attendees needing such assistance should call (202) 416–2449 (Voice); (202) 416–2004 (TTY), to make necessary arrangements.

Requests for further information concerning the meeting may be directed to Mr. James D. LaPierre, Deputy Executive Secretary of the Corporation, at (202) 898–6757.

Dated: August 7, 2000.

Federal Deposit Insurance Corporation.

James D. LaPierre,

Deputy Executive Secretary.

[FR Doc. 00–20402 Filed 8–8–00; 11:33 am]

BILLING CODE 6714–01–M

DEPARTMENT OF HEALTH AND HUMAN SERVICES

Centers for Disease Control and Prevention

Government-Owned Inventions; Availability for Licensing and Collaborative Research and Development Agreements (CRADA)

AGENCY: Centers for Disease Control and Prevention, Technology Transfer Office, Department of Health and Human Services.

ACTION: Notice.

The inventions named in this notice are owned by agencies of the United States Government and are available for licensing in the United States (U.S.) in accordance with 35 U.S.C. 207, and are available for cooperative research and development agreements (CRADAs) in accordance with 15 U.S.C. 3710, to achieve expeditious commercialization of results of federally funded research and development. Foreign patent applications are filed on selected inventions to extend market coverage for U.S. companies and may also be available for licensing.

ADDRESSES: Licensing and CRADA information, and copies of the U.S. patent applications listed below, may be obtained by writing to Thomas E. O'Toole, M.P.H., Deputy Director, Technology Transfer Office, Centers for Disease Control and Prevention (CDC), Mailstop E–67, 1600 Clifton Rd., Atlanta, GA 30333, telephone (404) 639–6270, email tto@cdc.gov. Please note that a signed Confidential Disclosure Agreement will be required to receive copies of the patent application.

Nucleic Acids Encoding Norwalk-Like Viruses (NLVs), Their Sequences, and Uses Thereof

Reverse transcription-polymerase chain reaction (RT–PCR) has been used worldwide for the diagnosis of Norwalk-like virus (NLV) infection, yet a commonly accepted genetic classification scheme has not been established. On the basis of the analysis of amino acid sequences in the second open reading frame (ORF2) regions from a total of 101 NLV strains, including 2 bovine strains, a genetic classification scheme is proposed that differentiates 99 human strains into 2 major genetic groups, consisting of 5 and 10 genetic clusters, respectively. The 2 bovine strains constitute a newly defined third major genetic group composed of two putative clusters represented by each strain. This classification scheme is well supported by the analysis of the entire ORF2 sequences from 38 strains selected to represent the genetic diversity of the human strains used above. This scheme should provide a firm scientific basis for designation and evaluation of improved molecular methods for the diagnosis of NLV infection.

CDC Ref.#: I–025–99/0.

Inventor(s): Tamie Ando; Stephen S Monroe; Roger Glass.

Identification of a 54kDa Antigen of *Mycoplasma pneumoniae*, as Well as Specific Antibodies to This Antigen, in Urine of Infected Individuals

M. pneumoniae is a common cause of atypical pneumonia, tracheobronchitis, and pharyngitis. *M. pneumoniae* is difficult to culture for diagnostic purposes and serum antibodies used for diagnostic confirmation often arise too late for timely treatment decisions. A specific *M. pneumoniae* antigen has

been identified which is present during acute infection. This antigen may be used as a diagnostic marker and may also be used to monitor treatment efficacy.

CDC Ref.#: I–026–99/0.

Inventor(s): Stephanie Schartz; Deborah Talkington.

Serotype-Specific Identification of Enterovirus 71 by RT–PCR

Enterovirus 71 (EV71) has been responsible for many outbreaks throughout the world since the early 1970s. Infections can result in severe neurologic symptoms including poliomyelitis-like paralysis. Recently, EV71 caused large outbreaks of hand-foot-mouth disease in Asia with thousands of reported cases. This invention provides a method for the rapid serotype identification of EV71. There are over 780 serotypes of Enteroviruses and many of them have potential for causing diseases with similar symptoms, so viral identification is necessary. Many diagnostic labs would like to implement simple and fast tests to identify viruses. The primer pairs described by these researchers are specific for the Enterovirus agent EV71. The virus is known to be fairly prevalent and the sequencing studies indicate that there are two genetically different groups of this virus. The amplicons produced with these primers allow sequencing and even resolution to which genetic group the virus belongs.

U.S. Patent Application Serial No. 60/164,520

CDC Ref.#: I–027–99/0.

Inventor(s): Betty A Brown; David Kilpatrick; Mark Pallansch; Steven Oberste.

CD40 Ligand Adjuvant for Respiratory Syncytial Virus

CD40 Ligand (CD40L) is an important costimulatory molecule on the T-cell and is central to the development of immunity. CD40L expression can influence cytokine response and is responsible for immunoglobulin class switching in B-cells. CD40L can be used as an adjuvant to enhance cytokine and antibody response to RSV. CD40L can be used as an adjuvant to enhance any immune response, particularly to weak antigens. Expression of CD40L with antigens may enhance the potency or efficacy of vaccines, by enhancing both the antibody response and the T-cell response in terms of cytokine production.

U.S. Patent Application Serial No. 60/179,905

CDC Ref.#: I–029–99/0.

Inventor(s): Ralph A Tripp; Michael Brown.

A Novel Method for the Isolation of *Helicobacter pylori* From Highly Contaminated Specimens

H. pylori is an established cause of chronic gastritis, duodenal and gastric ulcer, and is linked to gastric cancer. *H. pylori* is difficult to culture from extra-gastric and environmental samples due to heavy contamination with other microorganisms that inhibit the growth of *H. pylori* on commercially available media. New sample treatment methods which eliminate all other microorganisms while not affecting *H. pylori* allow diagnostic and environmental samples to be grown on non-selective growth media.

CDC Ref.#: I–030–99/0.

Inventor(s): Qunsheng Song; Gerald W Zirnstein; Ben Gold.

Cloning of a Diagnostic Antigen (gp50) for *Taenia solium* Cysticercosis

Cysticercosis (pork tapeworm disease) is acquired by ingestion of *Taenia solium* cysticerci found in raw and undercooked pork muscle or food contaminated with human or pig feces. Native gp50 antigen from *Taenia solium* has been shown to be highly sensitive and specific in detecting individuals with neurocysticercosis. The gp50 antigen has been cloned and may be useful for improvements over the existing Western blot diagnostic method.

CDC Ref.#: I–031–99/0.

Inventor(s): Victor Tsang; Ryan M Greene; Patricia P Wilkins; Kathy Hancock.

Software for Calculating and Graphing Magnetic Field Characteristics and Exposure Metrics From Waveform Measurements

Magnetic fields are suspected of causing cancer, Alzheimer's disease, and other serious health problems. In order to measure individual magnetic field exposures, multiwave instruments measure magnetic field undulations in three perpendicular directions. This software analyzes the exposure metrics using standard and novel mathematical manipulations leading to highly accurate exposure calculations applicable to large scale epidemiological studies of magnetic field health risks or surveys of the geomagnetic environment.

CDC Ref.#: I–032–99/0.

Inventor(s): Joseph Bowman; Richard M Edwards.

Jet Aerosol Vaccination System

This invention comprises an aerosol vaccination system designed for the administration of measles vaccine. The device is a hand held, jet aerosol vaccine delivery system which delivers vaccine to the respiratory tract via disposable nasal prongs. The jet aerosol is generated with a hand pump or compressed gas. The prototype vaccine is measles; however, this device may be adapted for any vaccine suitable for respiratory administration.

CDC Ref.#: I–033–99/0.

Inventor(s): Mark J Papania.

Hand-held, Rechargeable Battery Powered Ultrasonic Aerosol Vaccination Device

This invention comprises an aerosol vaccination system designed for the administration of measles vaccine. The device is a hand held, battery powered ultrasonic nebulizer which delivers vaccine to the respiratory tract via disposable nasal prongs. The prototype vaccine is measles; however, this device may be adapted for any vaccine suitable for respiratory administration.

CDC Ref.#: I–034–99/0.

Inventor(s): Mark J Papania.

Mosquito Midgut Antigen-based Monoclonal Antibodies That Inhibit the Transmission of Different Species of Human Malaria in Different Mosquito Vectors

Current malaria vaccine development efforts focus primarily on moderating infection in the human host rather than targeting the mosquito vectors responsible for the spread of malaria. A set of monoclonal antibodies has been developed which inhibit the development of human malaria parasites in different species of mosquitos by blocking specific mosquito antigens. It may be possible to develop a malaria transmission blocking vaccine by immunizing humans with DNA or protein forms of the identified mosquito antigens. The human antibodies elicited against such antigens, when ingested by the mosquito along with infectious parasites, may prevent the development of parasites in the mosquito and thus halt malaria transmission.

CDC Ref. #: I–002–00/0.

Inventor(s): Altaf Lal; Pamela Patterson.

In Vitro Granuloma as a Model To Examine Tuberculosis Latency

Tuberculin skin testing for *M. tuberculosis* cannot distinguish between active or latent *M. tuberculosis* infections; nontuberculosis mycobacteria infections; and BCG

vaccine exposure. Nor can skin testing positively identify *M. tuberculosis* infections in some immunosuppressed individuals. It is suspected that asymptomatic individuals may harbor latent *M. tuberculosis* bacilli within lung or lymph node granulomas. An in vitro granuloma model has been developed and four suspected latency genes have been identified. These gene products may be useful for differentiating between latent and active *M. tuberculosis* infections and for efficacy testing of drug regimens against latent infections.

CDC Ref. #: I–003–00/0.

Inventor(s): Fred D Quinn; Kristin A Birkness; Manon Deslauriers.

Design of Ergonomic Handle for Roll-on/Carry-on Luggage

This invention improves user's comfort through two ergonomic handle design features. A handle orientation feature enables the user to pull the luggage while maintaining a natural and comfortable posture. The second feature relates to the adjustability of the handle length according to the height of the user, thus minimizing the lifting force needed when pulling the luggage.

CDC Ref. #: I–004–00/0.

Inventor(s): Awwad J Dababneh.

Model Bladder for Foley Catheter Testing

This model enables growth of bacterial biofilms in foley catheters for gene transfer and other experiments. It is comprised of 4 bladders in a heated water bath and mimics the action of a urinary tract. This device will enable us to determine microbial biofilm formation of urinary catheters and study methods to control this process.

CDC Ref. #: I–005–00/0.

Inventor(s): Amy Norton; Wayne Kirby; Rodney Donlan.

Flushed-seal Respirator: A More Protective, Negative Pressure Respirator

This invention reduces face seal leakage to increase respirator safety by forcing the outside seal to be flushed with clean air.

CDC Ref. #: I–006–00/0.

Inventor(s): Donald L. Campbell; Christopher C. Coffey; Judith B. Hudnell; William A. Hoffman.

Isolation and Characterization of Nucleic Acids of the *Bartonella henselae* virB Operon and Polypeptides Encoded by the virB Operon Nucleic Acids

We have sequenced the VirB virulence operon of *B. henselae.* This operon consists of 10 genes that could possibly play a role in the pathogensis of *Bartonella* infections. These genes would therefore be valuable as candidates for diagnostic tools and vaccines. One of the genes within this operon (virB4) encodes a protein of molecular weight 89.5 kDa. This size closely resembles the size (83 kDa) of an immunodominant antigen of *B. henselae* that has been shown to be reactive with sera from patients diagnosed with cat scratch disease. If these antigens represent the same protein, the 89.5 kDa (virB4) protein could be a viable candidate for developing a diagnostic tool because of the fact that it is a highly conserved, immunodominant antigen. In addition, the lack of cross reactivity of the 83 kDa antigen with other *Bartonella* species suggests that it would be useful as a candidate antigen for a species-specific diagnostic test to differentiate *Bartonella* species.

CDC Ref. #: I–008–00/0.

Inventor(s): Indira Padmalayam; Robert Massung; Kevin Karem; Barbara Baumstark.

Chimeric Dengue Viruses as Candidate Vaccines for Humans

This invention takes advantage of the attenuating mutations found in the nonstructural regions of a Dengue 2 virus (strain PDK–53). The inventors have created a Dengue 1/Dengue 2 chimera with the nonstructural genes of the avirulant DEN–2 vaccine strain and the structural genes of DEN–1 (strain16007). This recombination provides an attenuated vaccine-type virus which retains the immunogenic properties of DEN–1. New developments for this invention also include a chimeric DEN–2/DEN–3 and DEN–2/DEN–4 virus. These chimeric DEN–2/DEN–1, DEN–2/DEN–3, and DEN–2/DEN–4 viruses are possible components for a tetravalent vaccine to protect humans from all four serotypes of DEN virus.

CDC Ref. #: I–009–00/0.

U.S. Patent Application Serial No. 60/182,829

Inventor(s): Claire Huang; Richard Kinney; Siritorn Butrapet; Duane J. Gubler; Natth Bhamarapravati.

Electrical Injury Protection System Using Radio Frequency Transmission

This electrical injury protection system protects electricians and other workers who work with or near energized low voltage (less than 600 volts) power lines by warning them if they come too close to the line and instantly turning off the power if they touch the bare power line. This system reduces the potential for severe injury or death from electrical shock.

CDC Ref. #: I–010–00/0.

U.S. Patent Application Serial No. 60/186,660

Inventor(s): Shengke Zeng; John R. Powers; Larry L. Jackson; David L. Conover.

PCR Primers Specific For 14 Genetic Types of Norwalk-like Viruses, Their Sequences and Use Thereof

This invention provides a set of 17 primers and their sequences for use in one-tube multi-plex RT–PCR to detect 13 genetic clusters of Norwalk-like viruses (NLVs) and simultaneously determine the genetic type on the basis of sequences of the second open reading frame (ORF2) encoding the viral capsid protein. The availability of a rapid, broad, and sensitive detection test for NLVs should facilitate the testing of clinical, food, and environmental specimens to elucidate the modes of transmission of NLVs.

CDC Ref. #: I–012–00/0.

Inventor(s): Tamie Ando; Stephen S. Monroe; Roger Glass.

Neutralizing Immunogenic Hepatitis E Virus (HEV) Polypeptides

This recombinant protein is being utilized as a diagnostic reagent in the development of immunoassays for the detection of anti-HEV activity in human sera. This protein may also have potential for use as a vaccine to prevent HEV infection.

CDC Ref. #: I–013–00/0

Inventor(s): Jihong Meng; Yury Khudyakov; Howard A. Fields.

Combination Peptide Construct of Antigenic Epitopes of PsaA (37 kDa) Protein From *Streptococcus pneunoniae*

An improved peptide construct consisting of a combination of antigenic epitopes of the PsaA (37 kDa) protein from *Streptococcus pneumoniae.* This construct is a possible vaccine candidate which may provide better immune stimulation over the previous invention (I–017–97/0) which was based on individual rather than combination epitopes.

CDC Ref. #: I–014–00/0.

Inventor(s): Edwin W Ades; Danny Jue; Scott E. Johnson; Jacqueline Sampson; George Carlone.

Diagnostic Peptide Sequence Discovered from Mouse Monoclonal Antibody 8A6 that Binds Specifically to *Chlamydophilia pneumoniae* and Recognized by Human Anti-*Chlamydophilia pneumoniae* Antibodies

Currently, there are few standardized assays for the detection of *Chlamydophilia pneumoniae* infection of humans. This invention is a peptide sequence that specifically binds *C. pneumoniae* and is recognized by anti-*C. pneumoniae* antibodies. This peptide may be useful for improving diagnostic methods by reducing the variability and high backgrounds found with methods that rely on whole organisms for detection. This peptide may also be useful for production of peptide or DNA vaccines.

CDC Ref. #: I–016–00/0

Inventor(s): Eric Marston; Jackie Sampson; Stephen Skelton; George Carlone; Trudy Messmer.

Method and Composition of Using HCV Specific Antigens in a Lateral Flow Rapid Assay for the Detection of Anti-HCV Activity in Human Sera

The hepatitis C virus (HCV) is a major causative agent of parenterally transmitted non-A, non-B hepatitis worldwide and is now considered the major causative agent responsible for post-transfusion hepatitis in the United States. This invention uses recombinant proteins of HCV for the detection of antibodies to HCV in human samples. The assay is an immunogold based detection system which will provide accurate and sensitive results in 15 minutes.

CDC Ref.#: I–017–00/0.

Inventor(s): Fields Howard; Yury Khudyakov; Yair Devash.

Isotropic Magnetic Field Based Proximity Receiver With Multiple Warning and Machine Shutdown Capabilities

This invention is an improvement to the receiver included in the Mobile Machine Hazardous Working Zone Warning System (US Pat. #5,939,986). The receiver is designed to warn machine operators when they are entering dangerous areas (such as unsupported roofs, limited visibility, operating machinery, etc.) and to shut down the equipment if desired. The improved receiver has the additional ability to disable the machinery to prevent restarting and also has improved accuracy in determining distance by virtue of a special design which operates regardless of the orientation of the receiver.

CDC Ref.#: I–018–00/0.

Inventor(s): William Schiffbauer.

Respiratory Syncytical Virus (RSV) G Glycoprotein Contains a CX3C Chemokine Motif Having Biological and Structural Similarities to the CX3C Chemokine Fractalkine: Implications for Vaccine Design and Therapeutic Treatments

RSV is the single most important cause of lower respiratory tract disease in children. Many vaccination strategies have been attempted, but as of yet none have been successful. This invention relates to the discovery of functional motifs in the RSV G protein that may provide new insights into the past vaccine failures and may lead to immunogenic modifications that would provide a safe and efficient RSV vaccine.

CDC Ref.#: I–022–00/0.

Inventor(s): Ralph A Tripp; Les Jones; Larry J Anderson.

Determination of the Full Length Genomic Sequence of SFVhu1 a Foamy Virus Isolated From a Human Infection

This invention comprises the full length sequence of the simian foamy virus SFVhu1. This virus may have potential as a noninfectious viral vector for gene therapy and vaccine delivery systems.

CDC Ref.#: I–023–00/0.

Inventor(s): Margaret E Callahan; Paul Sandstrom; Subbarao Shambavi; Thomas Folks.

Use of Novel Compounds for Pest Control: Insecticidal and Acaricidal Eremophilane Sesquiterpenes

The control of public health pests is critical for preventing numerous vector borne diseases throughout the world. New insecticidal compounds and application strategies are needed to protect both public health and the environment, and to combat chemical resistance. In this invention, biologically active fractions of essential oil of Alaska yellow cedar have been identified which are insecticidal and acaricidal. These natural compounds were found to be active for up to 11 weeks against the tick vector, Ixodes scapularis; the mosquito vector, Aedes aegypti; and the flea vector, Xenopsylla cheopsis.

CDC Ref.#: I–024–00/0.

Inventor(s): Gary O Maupin; Joe Karchesy; Nicholas A Panella.

Gene Coding for a Putative Insecticidal Protein From the Human Pathogen *Burkholderia pseudomallei*

Burkholderia pseudomallei (previously called Pseudomonas pseudomallei) is a human bacterial pathogen which causes meliodosis, a disease which is endemic in southeast Asia. This discovery of a putative insecticidal protein expressed by B. pseudomallei may have dual functions. A primary application would allow for the development of serological tests for human infection using antibodies derived from the protein and PCR based detection methods derived from the gene sequence. A second possible application of this new protein could include the exploitation of its potential insecticidal properties. These applications might be similar to the methods used to produce a variety of transgenic crops incorporating the Bacillus thuriengensis toxin gene which has been used to create crops resistant to a variety of insect pests.

CDC Ref.#: I–025–00/0.

Inventor(s): Bret M Steiner.

Rapid Identification of *Nocardia farcinica* by a PCR Assay Targeting a 409-bp Species-specific DNA Fragment

The bacterial complex Nocardia asteroides is a serious threat to immunosuppressed individuals, especially those with organ transplants, lung disease, and AIDS. Nocardia farcinica is the most clinically significant species because it characteristically demonstrates resistance to multiple, extended spectrum antimicrobial agents. Traditional identification methods are time consuming and labor-intensive (up to 8 weeks for definitive results). This invention comprises a unique DNA sequence within the N. farcinica genome which allows for PCR-based diagnostics which are specific to the species and do not cross react with closely related species and genera.

CDC Ref.#: I–027–00/0.

Inventor(s): Brent A Lasker; June M Brown; Kim T Pham.

Laboratory Butane Burner Safety Stand

Some new laboratory facilities are being built without laboratory gas for safety reasons. Bacteriologists conducting classical bacteriology have occasional need for open flame sources in the lab. Portable butane systems are available, but lack stability in the base and are therefore easy to knock over. A laboratory stand has been developed which will provide a wider base and can be easily decontaminated.

CDC Ref.#: I–028–00/0.

Inventor(s): Joanne J Jones; Gerald J Pellegrini; Michael Stepp; Kenneth C Demons.

Hydraulic Impact Hammer Pincher Arm Attachment

This device is designed to pick up and remove debris from grizzlies (rock screens) in mines and quarries, thus preventing debris from entering and plugging crushing equipment during the oversized rock breaking process. It consists of a hydraulically activated pincher arm which is attached to an impact hammer head. The advantage of this device is a reduction in the number of injuries associated with manual clearing of debris and a reduction in the amount of time needed to rake fine particles which cover debris and oversized rock.

CDC Ref.#: I–029–00/0.

Inventor(s): Bill M Stewart; Dean Eisenbacher; Matt Kopp; Tom Zysk.

Joseph R. Carter,

Associate Director for Management and Operations, Centers for Disease Control and Prevention.

[FR Doc. 00–20226 Filed 8–9–00; 8:45 am]

BILLING CODE 4163–18–P

DEPARTMENT OF HEALTH AND HUMAN SERVICES

Centers for Disease Control and Prevention

Disease, Disability and Injury Prevention and Control Special Emphasis Panel: Innovative Technology Development Grant for the Assessment of Micronutrient Status in Humans, PA# 00077; Meeting

In accordance with section 10(a)(2) of the Federal Advisory Committee Act (Pub. L. 92–463), the Centers for Disease Control and Prevention (CDC) announces the following meeting.

Name: Disease, Disability and Injury Prevention and Control Special Emphasis Panel: Innovative Technology Development Grant for the Assessment of Micronutrient Status in Humans, PA# 00077.

Times and Dates:

9 a.m.–9:30 a.m., August 15, 2000 (Open)
9:30 a.m.–5 p.m., August 15, 2000 (Closed)
9 a.m.–3 p.m., August 16, 2000 (Closed)

Place: Doubletree Hotel Atlanta-Buckhead, 3340 Peachtree Rd., NE, Atlanta, GA 30326.

Status: Portions of the meeting will be closed to the public in accordance with provisions set forth in section 552b(c)(4) and (6), Title 5 U.S.C., and the Determination of the Associate Director for Management and Operations, CDC, pursuant to P. L. 92–463.

This notice is published less than 15 days prior to the meeting due to administrative delays.

Matters to be Discussed: The meeting will include the review, discussion, and evaluation of applications received in response to PA# 00077.

Contact Person for More Information: Charles H. Buxton, National Center for Environmental Health, CDC, 4770 Buford Hwy., m/s F18, Atlanta, Ga. 30341–3724. Telephone 770–488–4160, e-mail cbuxton@cdc.gov.

The Director, Management Analysis and Services Office, has been delegated the authority to sign **Federal Register** Notices pertaining to announcements of meetings and other committee management activities, for the both the Centers for Disease Control and Prevention and the Agency for Toxic Substances and Disease Registry.

Dated: August 4, 2000.

Carolyn J. Russell,

Director, Management Analysis and Services Office, Centers for Disease Control and Prevention.

[FR Doc. 00–20400 Filed 8–8–00; 2:19 pm]

BILLING CODE 4163–18–P

DEPARTMENT OF HEALTH AND HUMAN SERVICES

Health Care Financing Administration

[Document Identifier: HCFA–R–260]

Emergency Clearance: Public Information Collection Requirements Submitted to the Office of Management and Budget (OMB)

AGENCY: Health Care Financing Administration, HHS.

In compliance with the requirement of section 3506(c)(2)(A) of the Paperwork Reduction Act of 1995, the Health Care Financing Administration (HCFA), Department of Health and Human Services, is publishing the following summary of proposed collections for public comment. Interested persons are invited to send comments regarding this burden estimate or any other aspect of this collection of information, including any of the following subjects: (1) The necessity and utility of the proposed information collection for the proper performance of the agency's functions; (2) the accuracy of the estimated burden; (3) ways to enhance the quality, utility, and clarity of the information to be collected; and (4) the use of automated collection techniques or other forms of information technology to minimize the information collection burden.

We are, however, requesting an emergency review of the information collection referenced below. In compliance with the requirement of section 3506(c)(2)(A) of the Paperwork Reduction Act of 1995, we have submitted to the Office of Management and Budget (OMB) the following requirements for emergency review. Due to the fact that the collection of this information is needed before the expiration of the normal time limits under OMB's regulations at 5 CFR Part 1320, we are requesting an emergency review. This is necessary to ensure compliance with the Balanced Budget Refinement Act of 1999 (BBRA). We cannot reasonably comply with the normal clearance procedures because we will not be able to determine adequately and timely whether a potential accreditation organization for Medicare+Choice should be approved unless we have the necessary guidelines against which we can compare the organization's standards. Thus, public harm may result if we approve an organization whose standards are not at least as stringent as ours. We are required to act on applications within 210 days from date of receipt and have begun to receive applications.

The Quality Improvement System for Managed Care (QISMC), developed with the assistance of State and industry representatives, consists of a set of standards and guidelines that are designed to implement the provisions of the Balanced Budget Act of 1997 and the regulations, HCFA–1030-IFC (which established the Medicare+Choice program) and HCFA-2001-P (which would revise the Medicaid managed care program). For Medicare, the QISMC document is equivalent to a program manual. As such, the document simply represents HCFA's administrative interpretation of the Medicare+Choice requirements relating to an organization's operation and performance in the areas of quality measurement and improvement and the delivery of health care and enrollee services. For Medicaid, the standards and guidelines are tools for States to use at their discretion in ensuring the quality of managed care organizations with Medicaid contracts. Use of the QISMC standards assures States that the quality standards they adopt most closely resemble the standards HCFA will be using with Medicare+Choice organizations.

The purpose of this submission is to request approval of use of the revised QISMC standards and guidelines. The revised QISMC standards and guidelines are only slightly different from those currently approved. They incorporate clarifications issued in response to questions from the public generated by the original QISMC and to changes to the M+C regulations made either as the result of public comments or as the result of statutory changes. None of the changes increase the burden on managed care organizations.

HCFA is requesting OMB review and approval of this collection within ten

working days of publication of this notice in the **Federal Register**, with a 180-day approval period. Written comments and recommendations will be accepted from the public if received by the individuals designated below by nine working days of the publication of this notice. During this 180-day period, we will publish a separate **Federal Register** notice announcing the initiation of an extensive 60-day agency review and public comment period on these requirements. We will submit the requirements for OMB review and an extension of this emergency approval; *Type of Information Request:* Revision of a currently approved collection; *Title of Information Collection:* Quality Improvement System for Managed Care; *Form Number:* HCFA-R–260 (OMB approval #0938–0745); *Use:* The QISMC standards and guidelines are designed to implement the quality assurance provisions of the Balanced Budget Act of 1997(as amended by the Balanced Budget Refinement Act of 1999) and the regulations they generated, HCFA–1030-IFC and HCFA–2001-P; *Frequency:*. Annual; *Affected Public:* Business or other for-profit; *Number of Respondents:* 263; *Total Annual Responses:* 263; *Total Annual Hours Requested:* 1 hour.

To obtain copies of the supporting statement for the proposed paperwork collections referenced above, access **HCFA's Web Site Address** at **WWW.HCFA.GOV/REGS/PRDACT95.HTM,** or E-mail your request, including your address and phone number, to Paperwork@hcfa.gov, or call the Reports Clearance Office on (410) 786–1326.

Interested persons are invited to send comments regarding the burden or any other aspect of these collections of information requirements. However, as noted above, comments on these information collection and record keeping requirements must be mailed and/or faxed to the designees referenced below within nine working days of the publication of this notice in the **Federal Register:**

Health Care Financing Administration, Office of Information Services, Security and Standards Group, Division of HCFA Enterprise Standards, Room N2–14–26, 7500 Security Boulevard, Baltimore, MD 21244–1850. Fax Number: (410) 786–0262. Attn: Julie Brown HCFA-—R–260

and,

Office of Information and Regulatory Affairs, Office of Management and Budget, Room 10235, New Executive Office Building, Washington, DC 20503, Fax Number: (202) 395–6974 or (202) 395–5167. Attn: Allison Herron Eydt, HCFA Desk Officer.

Dated: July 31, 2000.

John P. Burke III,

HCFA Reports Clearance Officer, HCFA, Office of Information Services, Security and Standards Group, Division of HCFA Enterprise Standards.

[FR Doc. 00–20284 Filed 8–9–00; 8:45 am]

BILLING CODE 4120–03–P

DEPARTMENT OF HEALTH AND HUMAN SERVICES

Health Care Financing Administration

[Document Identifier: HCFA–10016]

Emergency Clearance: Public Information Collection Requirements Submitted to the Office of Management and Budget (OMB)

AGENCY: Health Care Financing Administration, HHS.

In compliance with the requirement of section 3506(c)(2)(A) of the Paperwork Reduction Act of 1995, the Health Care Financing Administration (HCFA), Department of Health and Human Services, is publishing the following summary of proposed collections for public comment. Interested persons are invited to send comments regarding this burden estimate or any other aspect of this collection of information, including any of the following subjects: (1) The necessity and utility of the proposed information collection for the proper performance of the agency's functions; (2) the accuracy of the estimated burden; (3) ways to enhance the quality, utility, and clarity of the information to be collected; and (4) the use of automated collection techniques or other forms of information technology to minimize the information collection burden.

We are, however, requesting an emergency review of the Information collections referenced below. In compliance with the requirement of section 3506(c)(2)(A) of the Paperwork Reduction Act of 1995, we have submitted to the Office of Management and Budget (OMB) the following requirements for emergency review. We are requesting an emergency review because the collection of this information is needed prior to the expiration of the normal time limits under OMB's regulations at 5 C.F.R., Part 1320 and is essential to the mission of the Agency. The Agency cannot reasonably comply with the normal clearance procedures because of a statutory deadline imposed by section 4319 of the Balanced Budget Act of 1997. Without this information, HCFA would not be able to properly implement all of the requirements set forth in the statute prior to the statute's sunset provision, causing a statutorily ordered deadline to be missed. Lastly, emergency clearance is requested because public harm will likely result if the normal clearance procedures are followed. Studies by the Government Accounting Office and the Office of the Inspector General have found that Medicare payments for items of durable medical equipment are far greater than prices paid by other insurers and are sometimes greater than prices available to the general public at retail outlets. And, the payments provided under Medicare fee schedules often represent unreasonably high markups from actual prices paid by suppliers. The use of the standard OMB approval process will cause the nonfulfillment the statutory requirements set forth in section 4319 of the Balance Budget Act of 1997 that seek to address these issues, resulting in public harm by allowing the unnecessary loss of public Medicare trust fund dollars.

HCFA is requesting OMB review and approval of this collection by 8/23/2000, with a 180-day approval period. Written comments and recommendations will be accepted from the public if received by the individuals designated below by 8/21/2000. During this 180-day period, we will publish a separate **Federal Register** notice announcing the initiation of an extensive 60-day agency review and public comment period on these requirements. We will submit the requirements for OMB review and an extension of this emergency approval.

Type of Information Collection Request: New Collection;

Title of Information Collection: Oxygen Consumer Survey: Medical Equipment and Supplies Consumer Survey;

Form No.: HCFA–10016 (OMB# 0938-NEW);

Use: The Oxygen Consumer Survey and Medical Equipment and Supplies Consumer Survey will be used to collect information from Medicare beneficiaries who use oxygen equipment, hospital beds, wheelchairs, orthotics, and inhalation drugs used with a nebulizer. This information will be used to evaluate the Health Care Financing Administration's (HCFA's) Competitive Bidding Demonstration for Durable Medical Equipment (DME) and Prosthetics, Orthotics, and Supplies (POS). In the demonstration, HCFA will use competitive bidding to set Medicare Part B fees for selected types of DME and POS.

The purpose of the evaluation is to determine whether the demonstration affects Medicare expenditures, access to care, quality of care, diversity of product selection, and industry competitiveness. The evaluation will also examine any problems associated with implementing competitive bidding for Part B services. Results of the evaluation will be used by HCFA and Congress to determine whether it is feasible to expand competitive bidding.

The research questions to be addressed by the surveys focus on access, quality, and product selection. Our information collection process will include fielding a survey for oxygen users and a survey for other medical equipment and supplies users before the demonstration begins and again after the new demonstration prices have been put into effect. Beneficiaries within the demonstration area will be surveyed; we will also survey beneficiaries within a control site that is similar to the demonstration site in terms of population, managed care penetration, volume of services, and number of beneficiaries. We will also control for socioeconomic factors when analyzing the data. This design will allow us to separate the effects of the demonstration from beneficiary- or site-specific effects.

This evaluation has been expanded to a second site, San Antonio, Texas, as of Mach 2000. The Balanced Budget Act of 1997 allowed for the demonstration to be conducted in up to three different regions. The demonstration has been ongoing in the first site, Polk County, Florida, since 1999. The baseline Polk County beneficiary surveys were conducted between March and June of 1999. The follow-up Polk County beneficiary surveys will be conducted during the fall of 2000.

We are seeking approval for the new beneficiary surveys (Baseline and Follow-up) for the San Antonio demonstration and comparison site and any subsequent demonstration and comparison sites that include the same DME and POS products. The surveys for the second site, San Antonio, are almost identical to the surveys used in the first site, Polk County, Florida.;

Frequency: Annually;

Affected Public: Individuals or Households;

Number of Respondents: 2,500;

Total Annual Responses: 2,500;

Total Annual Hours: 725.

To obtain copies of the supporting statement and any related forms for the proposed paperwork collections referenced above, access HCFA's Web Site address at http://www.hcfa.gov/regs/prdact95.htm, or E-mail your request, including your address, phone number, to Paperwork@hcfa.gov, or call the Reports Clearance Office on (410) 786–1326.

Interested persons are invited to send comments regarding the burden or any other aspect of these collections of Information requirements. However, as noted above, comments on these Information collection and recordkeeping requirements must be mailed and/or faxed to the designees referenced below, within ten working days:

Health Care Financing Administration, Office of Information Services, Security and Standards Group, Division of HCFA Enterprise Standards, Attention: Dawn Willinghan, Room N2–14–26, 7500 Security Boulevard, Baltimore, Maryland 21244–1850

and

Office of Information and Regulatory Affairs, Office of Management and Budget, Room 10235, New Executive Office Building, Washington, DC 20503, Fax Number: (202) 395–6974 or (202) 395–5167, Attn: Allison Herron Eydt, HCFA Desk Officer.

Dated: July 31, 2000.

John P. Burke III,

HCFA Reports Clearance Officer, HCFA, Office of Information Services, Security and Standards Group, Division of HCFA Enterprise Standards.

[FR Doc. 00–20285 Filed 8–9–00; 8:45 am]

BILLING CODE 4120–03–P

DEPARTMENT OF HOUSING AND URBAN DEVELOPMENT

[Docket No. FR–4560–N–09]

Notice Concerning Use of Remaining Unobligated Funds Under HUD's Designated Housing and Certain Developments Funding Availability Announcements

AGENCY: Office of the Assistant Secretary for Public and Indian Housing, HUD.

ACTION: Notice.

SUMMARY: On February 24, 2000, HUD published its Fiscal Year 2000 Super Notice of Funding Availability (SuperNOFA) for HUD's Housing, Community Development, and Empowerment Programs and Section 8 Housing Voucher Assistance. The Fiscal Year 2000 SuperNOFA included three funding availability announcements for Section 8 voucher assistance for persons with disabilities. HUD advised that any funds remaining unobligated under two of the Section 8 voucher programs would be used to fund applications for the third program. This document notifies the public that HUD now intends to use a portion of these remaining unobligated funds to provide vouchers to non-elderly persons with disabilities who are seeking to move from nursing homes and other institutional settings to housing in their local communities. Availability of voucher assistance for this purpose will be the subject of a separate **Federal Register** notice.

DATES: The application due dates for funding under the three programs in the Supplementary Information section of this notice have passed, and the application periods are closed. This notice does not reopen the application process for any of the three programs.

FOR FURTHER INFORMATION: You may contact George C. Hendrickson, Housing Program Specialist, Office of Public and Assisted Housing Delivery, Department of Housing and Urban Development, Room 4216, 451 Seventh Street, SW, Washington, DC 20410–8000; telephone (202) 708–1872, ext. 4064. (The number listed above is not a toll-free number). Persons with hearing or speech impairments may access this number via TTY (text telephone) by calling the Federal Information Relay Service at 1–800–877–8339 (this is a toll-free number).

SUPPLEMENTARY INFORMATION:

Background

On February 24, 2000 (65 FR 9322), HUD published its Fiscal Year 2000 Super Notice of Funding Availability (FY 2000 SuperNOFA) for HUD's Housing, Community Development, and Empowerment Programs and Section 8 Housing Voucher Assistance. The FY 2000 SuperNOFA included announcements of funding availability under the following three programs: Mainstream Housing Opportunities for Persons with Disabilities (Mainstream Housing) (65 FR 9963); Rental Assistance for Non-Elderly Persons with Disabilities Related to Certain Types of Section 8 Project-Based Developments and Section 202, 221(d) and 236 Developments (Certain Developments) (65 FR 9975); and Rental Assistance for Non-Elderly Persons with Disabilities in Support of Designated Housing Plans (Designated Housing) (65 FR–9985). [1]

In the funding availability announcements for Certain Developments and Designated Housing, HUD advised that any funds remaining unobligated under these two programs,

[1] A correction of error was also published in the **Federal Register** for the Mainstream Housing Program on June 10, 2000, at 65 FR 37994.

as provided in the funding availability announcements for these two programs, would be used to fund applications from public housing agencies (PHAs) under the Mainstream Housing program (see 65 FR 9977, column three, and 65 FR 9986, column three, respectively).

This Notice

This notice advises that HUD now intends to use a portion of the funds remaining unobligated under Certain Developments and Designated Housing to fund vouchers solely for those non-elderly persons with disabilities who are seeking to move from nursing homes and other institutional settings to housing in their local communities. HUD intends to make available approximately $2.5 million to fund 400 vouchers for this initiative.

HUD will publish a separate notice in the **Federal Register** to announce this initiative. The **Federal Register** notice to be published will identify the basic policy and design of the initiative, the PHAs selected by HUD to participate in this initiative, and the criteria used to select the PHAs.

Dated: August 2, 2000.

Harold Lucas,

Assistant Secretary for Public and Indian Housing.

[FR Doc. 00–20253 Filed 8–9–00; 8:45 am]

BILLING CODE 4210–33–P

DEPARTMENT OF HOUSING AND URBAN DEVELOPMENT

[Docket No. FR–4572–D–03]

Delegation of Authority, Appraiser Roster Removal, 24 CFR 200.204

AGENCY: Office of the Assistant Secretary for Housing-FHA Commissioner, HUD.

ACTION: Notice of the delegation of authority to remove appraisers from the FHA roster pursuant to the HUD regulation at 24 CFR part 200.

SUMMARY: In this notice the Assistant Secretary for Housing delegates to certain HUD officials in the FHA Single Family Homeownership Centers (HOCs) in Philadelphia, PA; Atlanta, GA; Denver, CO and Santa Ana, CA, the power and authority to issue notices of removal from the FHA roster for cause to unsatisfactory appraisers who have been found in violation of the HUD regulations at 24 CFR 200.204(a)(1).

EFFECTIVE DATE: July 27, 2000.

FOR FURTHER INFORMATION CONTACT: Vance T. Morris, Director, Office of Insured Single Family Housing Program Development, Room 9266, U.S. Department of Housing and Urban Development, 451 Seventh Street, SW, Washington, DC 20410; telephone (202) 708–2700 (this is not a toll-free number). This number may be accessed via TTY by calling the Federal Information Relay Service at 1–800–877–8339.

SUPPLEMENTARY INFORMATION: On May 5, 2000, the final rule implementing the FHA appraiser roster removal procedures became effective. The final rule, 24 CFR 200.204, sets forth the reasons for removing an appraiser from the FHA roster, the procedures for removal and reinstatement of the appraiser, and the types of remedies available to the Department against an appraiser found to have violated HUD statutes or regulations. The Assistant Secretary of Housing is hereby delegating the power and authority to issue written notices of proposed removal, and to process any appeals of the notice of proposed removal, including conducting an informal conference if requested by the appraiser, to designated officials in each HOC. This delegation is subject to the limitations in Section B below.

Section A. Delegation of Authority

1. Notices of Proposed Roster Removal: In accordance with 24 CFR 200.204(a)(2)(i), the Director of the Processing and Underwriting Division within each HOC, or a Branch Chief of a Technical Branch within that Division, may issue the written notice of proposed roster removal to the appraiser. This notice will include the reasons for the proposed removal and the duration of the removal.

2. Appeals of Proposed Roster Removals

In accordance with 24 CFR 200.204(a)(2)(ii), appeals of the notice of proposed removal, including conducting an informal conference if so requested by the appraiser, are to be handled by the Director of the HOC, or the HOC Deputy Director. Also, in accordance with 24 CFR 200.204(a)(2)(iii), within 30 days of receiving a written response from an appraiser, or within 30 days of the completion of an informal conference, the Director or Deputy Director of the HOC will review the appraiser's appeal and will issue a final decision either affirming, modifying or canceling an appraiser's removal from the appraiser roster. The time period for responding to an appraiser's appeal may be extended upon notice to the appraiser. The HOC Director or Deputy Director may not be involved in HUD's initial removal decision.

Section B. Limitations on Authority

1. Waiver of HUD Regulations: The authority delegated by this memorandum does not include the authority to waive HUD regulations.

2. Term of Delegation: Unless sooner revoked in writing, by the Assistant Secretary, this delegation shall automatically expire one year from the date of its authorization. Upon expiration, the delegation may be renewed or revised.

3. Re-delegation of Authority: The authority delegated herein may not be re-delegated.

Authority: Single Family Mortgage Insurance; Appraiser Roster Removal Procedures, 24 CFR part 200.

Dated: July 27, 2000.

Gary R. Eisenman,

General Deputy Assistant Secretary for Housing.

[FR Doc. 00–20254 Filed 8–9–00; 8:45 am]

BILLING CODE 4210–27–P

DEPARTMENT OF THE INTERIOR

Fish and Wildlife Service

Notice of Receipt of Applications for Permit

Endangered Species

The following applicants have applied for a permit to conduct certain activities with endangered species. This notice is provided pursuant to Section 10(c) of the Endangered Species Act of 1973, *as amended* (16 U.S.C. 1531, *et seq.*):

Applicant: Yale Institute for Biospheric Studies, New Haven, CT, PRT–031178

The applicant requests a permit to import biological samples of the Komodo monitor (*Varanus komodoensis*) taken from specimens in the wild in Indonesia for the purpose of enhancement of the survival of the species through studies of population genetics. This notice covers activities under this permit for a period of five years. Permit subject to annual renewal.

Applicant: Dallas Zoo, Dallas, TX, PRT–031258.

The applicant requests a permit to import blood samples from wild and captive held Ocolet (*Leopardus pardalis*) taken from specimens in Mexico for the purpose of enhancement through scientific research.

Applicant: Daniel J. Will, Platteville, CO, PRT–031295.

The applicant requests a permit to import the sport-hunted trophy of one male bontebok (*Damaliscus pygargus dorcas*) culled from a captive herd

maintained under the management program of the Republic of South Africa, for the purpose of enhancement of the survival of the species.

Applicant: John Lochow, Far Hills, NJ, PRT–031292.

The applicant requests a permit to import the sport-hunted trophy of one male bontebok (*Damaliscus pygargus dorcas*) culled from a captive herd maintained under the management program of the Republic of South Africa, for the purpose of enhancement of the survival of the species.

Applicant: Kathryn J. Will, Platteville, CO, PRT–031300.

The applicant requests a permit to import the sport-hunted trophy of one male bontebok (*Damaliscus pygargus dorcas*) culled from a captive herd maintained under the management program of the Republic of South Africa, for the purpose of enhancement of the survival of the species.

Applicant: Steve Mc Manus, Victoria, TX, PRT–031355.

The applicant requests a permit to import the sport-hunted trophy of one male bontebok (*Damaliscus pygargus dorcas*) culled from a captive herd maintained under the management program of the Republic of South Africa, for the purpose of enhancement of the survival of the species.

Applicant: Hugh Benford Jacks, Shoal Creek, AL, PRT–031358.

The applicant requests a permit to import the sport-hunted trophy of one male bontebok (*Damaliscus pygargus dorcas*) culled from a captive herd maintained under the management program of the Republic of South Africa, for the purpose of enhancement of the survival of the species.

Applicant: James Albert Bibler, Russellville, AR, PRT–031386.

The applicant requests a permit to import the sport-hunted trophy of one male bontebok (*Damaliscus pygargus dorcas*) culled from a captive herd maintained under the management program of the Republic of South Africa, for the purpose of enhancement of the survival of the species.

Applicant: Thomas Marshall Hahn Jr., Blacksburg, VA, PRT–031457.

The applicant requests a permit to import the sport-hunted trophy of one male bontebok (*Damaliscus pygargus dorcas*) culled from a captive herd maintained under the management program of the Republic of South Africa, for the purpose of enhancement of the survival of the species.

Applicant: International Wildlife Veterinary Services, Laramie, WY, PRT–797485. The applicant requests a permit to import biological samples taken from free-ranging black rhinoceros (*Diceros bicornis*) in Kenya, South Africa, and Zimbabwe, for scientific research. This notification covers activities conducted by the applicant over the next 5 years.

Applicant: San Francisco Zoo, San Francisco, CA, PRT–030603.

The applicant requests a permit to import one male captive-born Diana monkey (*Cercopithecus diana*) from the Royal Zoological Society of Scotland/ Edinburgh Zoo, Edinburgh, Scotland for the purpose of enhancement of the survival of the species through captive propagation.

Marine Mammal

The public is invited to comment on the following application for a permit to conduct certain activities with marine mammals. The application was submitted to satisfy requirements of the Marine Mammal Protection Act of 1972, *as amended* (16 U.S.C. 1361 *et seq.*) and the regulations governing marine mammals (50 CFR 18).

Applicant: Larry Masserant, Newport, MI, PRT–031377.

The applicant requests a permit to import a polar bear (*Ursus maritimus*) sport-hunted from the Lancaster Sound polar bear population, Northwest Territories, Canada for personal use.

Written data or comments should be submitted to the Director, U.S. Fish and Wildlife Service, Office of Management Authority, 4401 North Fairfax Drive, Room 700, Arlington, Virginia 22203 and must be received by the Director within 30 days of the date of this publication.

Documents and other information submitted with these applications are available for review, *subject to the requirements of the Privacy Act and Freedom of Information Act,* by any party who submits a written request for a copy of such documents to the following office within 30 days of the date of publication of this notice: U.S. Fish and Wildlife Service, Office of Management Authority, 4401 North Fairfax Drive, Room 700, Arlington, Virginia 22203. Phone: (703/358–2104); FAX: (703/358–2281).

Dated: August 7, 2000.

Charlie Chandler,

Chief, Branch of Permits, Office of Management Authority.

[FR Doc. 00–20236 Filed 8–9–00; 8:45 am]

BILLING CODE 4310–55–P

DEPARTMENT OF THE INTERIOR

Fish and Wildlife Service

Notice To Extend the Public Comment Period for the Draft Recovery Plan for the California Red-legged Frog (*Rana aurora draytonii*)

AGENCY: Fish and Wildlife Service, Interior.

ACTION: Notice of extension of public comment period.

SUMMARY: The U.S. Fish and Wildlife Service gives notice that the comment period announced in the May 12, 2000, notice of availability of the Draft Recovery Plan for the California red-legged frog *(Rana aurora draytonii*) will be extended an additional 90 days until November 8, 2000. This recovery plan includes the threatened California red-legged frog (*Rana aurora draytonii*). The draft plan contains recovery criteria and actions for the California red-legged frog. Additional species of concern that will benefit from recovery actions taken for the California red-legged frog are also discussed in the draft plan. The Service extends the current 90 day comment period and solicits review and comment from the public on this draft plan.

DATE: Comments on the draft recovery plan received by November 8, 2000, will be considered by the Service.

ADDRESSES: Copies of the draft recovery plan are available for inspection, by appointment, during normal business hours at the following location: U.S. Fish and Wildlife Service, Sacramento Fish and Wildlife Office, 2800 Cottage Way, W–2605, Sacramento, California (telephone (916) 414–6600). Requests for copies of the draft recovery plan and written comments and materials regarding this plan should be addressed to Wayne S. White, Field Supervisor, Ecological Services, at the above address.

FOR FURTHER INFORMATION CONTACT: Diane Elam, Fish and Wildlife Biologist, at the above address.

SUPPLEMENTARY INFORMATION:

Background

Restoring endangered or threatened animals and plants to the point where they are again secure, self-sustaining members of their ecosystems is a primary goal of the Service's endangered species program. To help guide recovery efforts, the Service is working to prepare recovery plans for most of the listed species native to the United States. Recovery plans describe actions considered necessary for the conservation of the species, establish

criteria for downlisting or delisting listed species, and estimate time and cost for implementing the recovery measures needed.

The Endangered Species Act of 1973, as amended (16 U.S.C. 1531 *et seq.*) (Act), requires the development of recovery plans for listed species unless such a plan would not promote the conservation of a particular species. Section 4(f) of the Act requires that public notice and an opportunity for public review and comment be provided during recovery plan development. The Service will consider all information presented during the public comment period prior to approval of each new or revised recovery plan. Substantive technical comments will result in changes to the plan. Substantive comments regarding recovery plan implementation may not necessarily result in changes to the recovery plan, but will be forwarded to appropriate Federal or other entities so that they can take these comments into account during the course of implementing recovery actions. Individualized responses to comments will not be provided.

The California red-legged frog (*Rana aurora draytonii*) occurs from sea level to elevations of about 1,500 meters (5,000 feet). It has been extirpated from 70 percent of its former range and now is found in coastal drainages of central California, from Marin County, California, south to northern Baja California, Mexico. The California red-legged frog requires a variety of habitat elements with aquatic breeding areas embedded within a matrix of riparian and upland dispersal habitats. Breeding sites of the California red-legged frog are in aquatic habitats including pools and backwaters within streams and creeks, ponds, marshes, sag ponds, dune ponds and lagoons. California red-legged frogs frequently breed in artificial impoundments such as stock ponds. Potential threats to the species include elimination or degradation of habitat from land development and land use activities and habitat invasions by non-native aquatic species.

The objective of this draft recovery plan is to delist the California red-legged frog through implementation of a variety of recovery measures including (1) protection of known populations and reestablishment of populations; (2) protection of suitable habitat, corridors, and core areas ; (3) habitat management; (4) development of land use guidelines; (5) research; (6) surveying and monitoring; and (7) public participation, outreach, and education.

Public Comments Solicited

The Service solicits written comments on the draft recovery plan described. All comments received by the date specified above will be considered prior to approval of this plan.

Authority: The authority for this action is section 4(f) of the Endangered Species Act, 16 U.S.C. 1533(f).

Dated: August 4, 2000.

Elizabeth H. Stevens,

Acting Manager, California/Nevada Operations Office, Region 1, U.S. Fish and Wildlife Service.

[FR Doc. 00–20228 Filed 8–9–00; 8:45 am]

BILLING CODE 4310–55–P

DEPARTMENT OF THE INTERIOR

Fish and Wildlife Service

Availability of a Draft Environmental Assessment on Proposed Special Regulations for the Preble's Meadow Jumping Mouse

AGENCY: Fish and Wildlife Service, Department of the Interior.

ACTION: Notice; correction.

SUMMARY: On August 2, 2000, the U.S. Fish and Wildlife Service published a Notice of Availability of a draft Environmental Assessment on the Proposed Special Regulations for the Preble's meadow jumping mouse (*Zapus hudsonius preblei*). This Notice contained errors in the address and phone number of the office to contact for a copy of the Environmental Assessment.

Correction

In the **Federal Register** of August 2, 2000, on page 47513 , correct the **ADDRESSES** Section to read:

ADDRESSES: Comments and requests for copies of the assessment should be submitted to the Field Supervisor, U.S. Fish and Wildlife Service, 755 Parfet Street, Suite 361, Lakewood, Colorado 80215, telephone (303) 275–2370. The draft Environmental Assessment also is available on our website at http://www.r6.fws.gov.

Dated: August 3, 2000.

John A. Blankenship,

Regional Director, Denver, Colorado.

[FR Doc. 00–20227 Filed 8–9–00; 8:45 am]

BILLING CODE 4310–55–P

DEPARTMENT OF THE INTERIOR

Fish and Wildlife Service

Issuance of Permit for Marine Mammals

On April 21, 2000, a notice was published in the **Federal Register**, Vol. 65, No. 92, Page 30426, that an application had been filed with the Fish and Wildlife Service by James Adams, Fruitport, MI, for a permit (PRT–026025) to import a sport-hunted polar bear (Ursus maritimus) trophy, taken from the Southern Beaufort Sea polar bear population, Northwest Territories, Canada for personal use.

Notice is hereby given that on July 12, 2000, as authorized by the provisions of the Marine Mammal Protection Act of 1972, *as amended* (16 U.S.C. 1361 *et seq.*) the Fish and Wildlife Service authorized the requested permit subject to certain conditions set forth therein.

On April 21, 2000, a notice was published in the **Federal Register**, Vol. 65, No. 92, Page 30426, that an application had been filed with the Fish and Wildlife Service by Williams E. Schwartz, Bossier, LA, for a permit (PRT–026830) to import a sport-hunted polar bear (Ursus maritimus) trophy, taken from the Resolute Bay polar bear population, Northwest Territories, Canada for personal use.

Notice is hereby given that on June 6, 2000, as authorized by the provisions of the Marine Mammal Protection Act of 1972, *as amended* (16 U.S.C. 1361 *et seq.*) the Fish and Wildlife Service authorized the requested permit subject to certain conditions set forth therein.

On April 21, 2000, a notice was published in the **Federal Register**, Vol. 65, No. 92, Page 30426, that an application had been filed with the Fish and Wildlife Service by Jon C. Bumstead, Newaygo, MI, for a permit (PRT–026138) to import a sport-hunted polar bear (Ursus maritimus) trophy, taken from the Southern Beaufort Sea polar bear population, Northwest Territories, Canada for personal use.

Notice is hereby given that on May 30, 2000, as authorized by the provisions of the Marine Mammal Protection Act of 1972, *as amended* (16 U.S.C. 1361 *et seq.*) the Fish and Wildlife Service authorized the requested permit subject to certain conditions set forth therein.

On December 10, 1999, a notice was published in the **Federal Register**, Vol. 64, No. 237, Page 69291, that an application had been filed with the Fish and Wildlife Service by Richard Lee Dorigatti, Logan, UT, for a permit (PRT–020091) to import a sport-hunted polar bear (Ursus maritimus) trophy, taken

from the Western Hudson Bay polar bear population, Northwest Territories, Canada for personal use.

Notice is hereby given that on January 27, 2000, as authorized by the provisions of the Marine Mammal Protection Act of 1972, *as amended* (16 U.S.C. 1361 *et seq.*) the Fish and Wildlife Service authorized the requested permit subject to certain conditions set forth therein.

On May 22, 2000, a notice was published in the **Federal Register**, Vol. 65, No. 99, Page 32121, that an application had been filed with the Fish and Wildlife Service by Edward D. Yates, Wrightsville, PA, for a permit (PRT–027205) to import a sport-hunted polar bear (*Ursus maritimus*) trophy, taken from the Lancaster Sound polar bear population, Northwest Territories, Canada for personal use.

Notice is hereby given that on July 18, 2000, as authorized by the provisions of the Marine Mammal Protection Act of 1972, *as amended* (16 U.S.C. 1361 *et seq.*) the Fish and Wildlife Service authorized the requested permit subject to certain conditions set forth therein.

On June 15, 2000, a notice was published in the **Federal Register**, Vol. 65, No. 116, Page 37569, that an application had been filed with the Fish and Wildlife Service by Michael R. Koenig, Sheboygan, WI, for a permit (PRT–028562) to import a sport-hunted polar bear (*Ursus maritimus*) trophy, taken from the Southern Beaufort Sea polar bear population, Northwest Territories, Canada for personal use.

Notice is hereby given that on July 18, 2000, as authorized by the provisions of the Marine Mammal Protection Act of 1972, *as amended* (16 U.S.C. 1361 *et seq.*) the Fish and Wildlife Service authorized the requested permit subject to certain conditions set forth therein.

On June 8, 2000, a notice was published in the **Federal Register**, Vol. 65, No. 111, Page 36464, that an application had been filed with the Fish and Wildlife Service by John T. Shillingburg, Riviera Beach, FL, for a permit (PRT–027987) to import a sport-hunted polar bear (*Ursus maritimus*) trophy, taken from the Northern Beaufort Sea polar bear population, Northwest Territories, Canada for personal use.

Notice is hereby given that on July 18, 2000, as authorized by the provisions of the Marine Mammal Protection Act of 1972, *as amended* (16 U.S.C. 1361 *et seq.*) the Fish and Wildlife Service authorized the requested permit subject to certain conditions set forth therein.

On June 8, 2000, a notice was published in the **Federal Register**, Vol. 65, No. 111, Page 36464, that an application had been filed with the Fish and Wildlife Service by Kevin S. Small, Bakersfield, CA, for a permit (PRT–027926) to import a sport-hunted polar bear (*Ursus maritimus*) trophy, taken from the Lancaster Sound polar bear population, Northwest Territories, Canada for personal use.

Notice is hereby given that on July 18, 2000, as authorized by the provisions of the Marine Mammal Protection Act of 1972, *as amended* (16 U.S.C. 1361 *et seq.*) the Fish and Wildlife Service authorized the requested permit subject to certain conditions set forth therein.

On June 8, 2000, a notice was published in the **Federal Register**, Vol. 65, No. 111, Page 36464, that an application had been filed with the Fish and Wildlife Service by Dennis M. Lord, Woodstock, GA, for a permit (PRT–027525) to import a sport-hunted polar bear (*Ursus maritimus*) trophy, taken from the McClintock Channel polar bear population, Northwest Territories, Canada for personal use.

Notice is hereby given that on July 18, 2000, as authorized by the provisions of the Marine Mammal Protection Act of 1972, *as amended* (16 U.S.C. 1361 *et seq.*) the Fish and Wildlife Service authorized the requested permit subject to certain conditions set forth therein.

On May 22, 2000, a notice was published in the **Federal Register**, Vol. 65, No.99, Page 32121, that an application had been filed with the Fish and Wildlife Service by Dyrk Tyrone Eddie, Kalispell, MT, for a permit (PRT–027384) to import a sport-hunted polar bear (*Ursus maritimus*) trophy, taken from the Lancaster Sound polar bear population, Northwest Territories, Canada for personal use.

Notice is hereby given that on July 19, 2000, as authorized by the provisions of the Marine Mammal Protection Act of 1972, *as amended* (16 U.S.C. 1361 *et seq.*) the Fish and Wildlife Service authorized the requested permit subject to certain conditions set forth therein.

Dated: August 2, 2000.

Kristen Nelson,

Chief, Branch of Permits, Office of Management Authority.

[FR Doc. 00–20237 Filed 8–9–00; 8:45 am]

BILLING CODE 4310–55–P

DEPARTMENT OF THE INTERIOR

Fish and Wildlife Service

Notice of Receipt of Application for Approval

The following applicant has applied for approval to conduct certain activities with birds that are protected in accordance with the Wild Bird Conservation Act of 1992. This notice is provided pursuant to section 112(4) of the Wild Bird Conservation Act of 1992, 50 CFR 15.26(c).

Applicant: CITES Management Authority of Argentina, Direccıon de Fauna y Flora Silvestre, Buenos Aires, Argentina. The applicant wishes to establish a scientifically based sustainable use management plan for the Blue-fronted amazon parrot (*Amazona aestiva*) in Argentina.

Written data or comments should be submitted to the Director, U.S. Fish and Wildlife Service, Office of Management Authority, 4401 North Fairfax Drive, Room 700, Arlington, Virginia 22203 and must be received by the Director within 30 days of the date of this publication.

Documents and other information submitted with this application are available for review, subject to the requirements of the Privacy Act and Freedom of Information Act, by any party who submits a written request for a copy of such documents to the following office within 30 days of the date of publication of this notice: U.S. Fish and Wildlife Service, Office of Management Authority, 4401 North Fairfax Drive, Room 700, Arlington, Virginia 22203. Phone: (703/358–2104); FAX: (703/358–2281).

August 4, 200.

Bruce Weissgold,

Acting Chief, Branch of CITES Operations, Office of Management Authority

[FR Doc. 00–20223 Filed 8–9–00; 8:45 am]

BILLING CODE 4310–55–P

DEPARTMENT OF THE INTERIOR

Fish and Wildlife Service

Notice of Receipt of Application for Approval

The following applicant has applied for approval to conduct certain activities with birds that are protected in accordance with the Wild Bird Conservation Act of 1992. This notice is provided pursuant to Section 112(4) of the Wild Bird Conservation Act of 1992, 50 CFR 15.26(c).

Applicant: Mr. Lee Horton, Fallbrook, California. The applicant wishes to establish a cooperative breeding program for Abyssinian love bird (*Agapornis taranta*), Black-cheeked love bird (*Agapornis nigrigenis*), Madagascar love bird (*Agapornis cana*), Nyasa love bird (*Agapornis lilianae*), and Red-faced love bird (*Agapornis pullaria*). The applicant wishes to be an active participant in this program along with

five other private individuals. The African Love Bird Society has assumed the responsibility for oversight of this program.

Written data or comments should be submitted to the Director, U.S. Fish and Wildlife Service, Office of Management Authority, 4401 North Fairfax Drive, Room 700, Arlington, Virginia 22203 and must be received by the Director within 30 days of the date of this publication.

Documents and other information submitted with this application are available for review, *subject to the requirements of the Privacy Act and Freedom of Information Act,* by any party who submits a written request for a copy of such documents to the following office within 30 days of the date of publication of this notice: U.S. Fish and Wildlife Service, Office of Management Authority, 4401 North Fairfax Drive, Room 700, Arlington, Virginia 22203. Phone: (703/358-2104); FAX: (703/358–2281).

Dated: August 4, 2000.

Bruce Weissgold,

Acting Chief, Branch of CITES Operations, Office of Management Authority.

[FR Doc. 00–20224 Filed 8–9–00; 8:45 am]

BILLING CODE 4310–55–P

DEPARTMENT OF THE INTERIOR

Bureau of Land Management

[AK–962–1410–HY–P; F–14910–C, F–14910–F, F–14910–J, F–14910–K]

Alaska Native Claims Selection; Notice for Publication

In accordance with Departmental regulation 43 CFR 2650.7(d), notice is hereby given that a decision approving lands for conveyance under the provisions of Sec. 14(a) of the Alaska Native Claims Settlement Act of December 18, 1971, 43 U.S.C. 1613(a), will be issued to NANA Regional Corporation, Inc., as Successor in Interest to Putoo Corporation, for 21,300.82 acres. The lands involved are within the following townships, located in the vicinity of Noorvik, Alaska:

Kateel River Meridian, Alaska

T. 15 N., R. 10 W.
T. 18 N., R. 11 W.
T. 15 N., R. 12 W.
T. 18 N., R. 13 W.

Notice of the decision will be published once a week, for four (4) consecutive weeks, in the *Arctic Sounder.* Copies of the decision may be obtained by contacting the Alaska State Office of the Bureau of Land Management, 222 West Seventh Avenue, #13, Anchorage, Alaska 99513–7599, (907) 271–5960.

Any party claiming a property interest which is adversely affected by the decision, an agency of the Federal government, or regional corporation, shall have until September 11, 2000 to file an appeal. However, parties receiving service by certified mail shall have 30 days from the date of receipt to file an appeal. Appeals must be filed in the Bureau of Land Management at the address identified above, where the requirements for filing an appeal may be obtained. Parties who do not file an appeal in accordance with the requirements of 43 CFR Part 4, Subpart E, shall be deemed to have waived their rights.

Barbara J. Opp,

Land Law Examiner, Branch of ANCSA Adjudication.

[FR Doc. 00–20229 Filed 8–9–00; 8:45 am]

BILLING CODE 4310–84–P

DEPARTMENT OF THE INTERIOR

Bureau of Land Management

[CO–100–00–4370–16]

Closure and Restriction to Entry and Use

AGENCY: Bureau of Land Management, Interior.

ACTION: Notice of closure.

SUMMARY: Notice is hereby given that pursuant to the authority of the Code of Federal Regulations, Title 43, Part 8300, subpart 8364, 8364.1 (Closure and Restriction Orders), which provides, in part, for the authorized officer to close or restrict use of designated public lands for the protection of persons, property, and public lands and resources. In order to reduce the inhumane treatment as defined in 43 CFR, subpart 4700.0–5(f), this order will be in effect immediately upon publication in the **Federal Register**. To allow wild horses and big game animals the uninhibited use of critical watering sources, the following areas are closed and restricted from camping, construction of hunting blinds, or any other use that would disrupt normal watering periods or prevent animals from using the following watering sources.

1. Coffee Pot Spring located in T.11N., R.98W., Sec. 22, SE,NW.
2. Sheepherder Spring located in T.10N., R.98W., Sec. 8, NE,SE.
3. Wild Horse Spring located in T.10N., R.98W., Sec. 26, NE,SE.
4. Lang Spring located in T.10N., R.97W., Sec 11, NW,NE.
5. Lake Draw Windmill located in T.11N., R.98W., Sec 34, SE,SW
6. Seven Mile Windmill located in T 9N., R.97W., Sec 17, SE,NE.
7. Hydraulic Spring located in T.9N., R.98W., Sec 35, W1/2,SE.
8. Clay Buttes Reservoir located in T.9N., R.98W., Sec 29, NE,SW.
9. No Name Reservoir #1 located in T.8N., R.98W., Sec 3, NW,SW.
10. No Name Reservoir #2 located in T.9N., R.98W., Sec 28, SE,SE.

These water sources are all located within the Sand Wash Basin and more specifically within the boundary of the Sand Wash Wild Horse Herd Management Area. The actual areas restricted and closed include one half mile distance in all directions from these water sources.

The areas described above shall remain closed to the public uses mentioned, for the period August 15, 2000 through November 15, 2000. This closure notice shall not preclude travel on public roads within the one-mile restricted area, nor administrative use by Bureau of Land Management Personnel.

Any person failing to comply with this closure and restricted use order may be subject to the penalties provided in 8360.0–7, 4760.2g, and 4760.2p of Title 43 Code of Federal Regulations.

Questions may be directed to Bureau of Land Management, Little Snake Field Office, 455 Emerson Street, Craig, CO 81625, telephone number (970) 826–5000.

John E. Husband,

Field Manager.

[FR Doc. 00–20289 Filed 8–9–00; 8:45 am]

BILLING CODE 4310–JB–P

DEPARTMENT OF THE INTERIOR

Bureau of Land Management

[NV–023–1232-EA-NV06; Special Recreation Permit # NV–023–00–03]

Closure of Certain Public Land, and Prohibition of Certain Activities, in the Winnemucca District for the Management of Lands and Activities Located in and Around the Burning Man Event Site, Pershing County, Nevada

AGENCY: Bureau of Land Management Department of the Interior (Interior)

ACTION: Closures and restrictions of public lands in Washoe and Pershing Counties.

SUMMARY: Certain lands would be temporarily closed or restricted, and certain activities would be temporarily prohibited, in the Winnemucca District, Pershing and Washoe Counties, Nevada, for camping, vehicle use, fire use, fireworks use, firearms use and aircraft landing from 6 a.m., August 28 to 12:00 pm, September 6, 2000. These closures, restrictions and prohibitions are being

made in the interest of public safety at and around the public lands location of an event known as the Burning Man Festival. This event is expected to attract at least 28,000 participants this year. The lands involved are located in the Mount Diablo Meridian and located northeast of Gerlach, Nevada.

Public Camping Is Prohibited in a Nine Square Mile Area Encompassing the Event, during the event period, August 28, 2000 to September 5, 2000, with the exception of defined camping areas designated and provided by the Black Rock City LLC, an authorized ''pilot camp'' and BLM-authorized event management-related camps The following public lands in and surrounding the Burning Man site are affected:

T33N, R24E,
Sec. 2; Sec. 3; Sec. 4; Sec. 9; Sec. 10; Sec. 11.
T33½N, R24E,
Sec. 33; Sec. 34; Sec. 35.

Operation of Motorized Vehicles Within the Event Boundary Area Is Prohibited, during the Burning Man event period, August 28, 2000 to September 4, 2000, with the following exceptions: participant arrival at the event and departure following event completion on designated routes, art vehicles registered with Burning Man; Black Rock City LLC staff and support, BLM, medical, law enforcement, and firefighting vehicles. ''Art Cars'' must register with Burning Man/Black Rock City LLC and must provide evidence of registration at all times. The following areas in and around the Burning Man event site are affected:

T33½N, R24E,
Sec. 33; Sec. 34; Sec. 35.
T33N, R24E,
Sec. 2, Sec. 3, Sec. 4, Sec. 9, Sec. 10, Sec. 11.

The ''West Track'' from The ''First Exit/Entrance'' (''3-Mile'') to the ''Second Exit/Entrance'' (''12-Mile'') Will Be Closed during the Burning Man event period, August 28, 2000 to September 4, 2000, with the exception of BLM personnel, law enforcement and emergency medical services, and authorized Burning Man staff. The ''West Track'' is that roadway or trackway on the Black Rock Desert playa that parallels the northwestern playa margin/shore of ancient Lake Lahontan. The ''Middle Track'' and ''East Track'' that lead out from the ''First Exit/Entrance'' (''3-Mile'') will remain open. The affected lands through which the ''West Track'' passes from southwest to northeast are:

T33N, R23E,
Sec. 25; Sec. 35;Sec. 36.
T33N, R24E,
Sec. 4; Sec. 5; Sec 8; Sec. 9; Sec. 17; Sec. 18; Sec 19.
T33½N, R24E,
Sec. 27; Sec. 33; Sec. 34.

Fire Restriction Orders Are in Effect: No Open Flames Are Permitted Within 1,000 Feet of Black Rock Desert Playa Edge Areas That Contain Vegetation. Black Rock City LLC/Burning Man will abide by fire restriction orders, except for the following as officially approved by Black Rock City LLC in coordination with BLM: Official art burns, authorized event fireworks, and other authorized fires only in Black Rock City LLC/Burning Man-supplied fire pans and fire barrels.

The Use, Sale or Possession of Personal Fireworks Within the Burning Man Event/Black Rock City Boundary Fence Is Prohibited, with the exception of those fireworks that have been approved by Black Rock City LLC as part of an official Burning Man art burn event. The following areas in and around the Burning Man event site are affected:

T33½N, R24E,
Sec. 33; Sec. 34; Sec. 35.
T33N, R24E,
Sec. 2, Sec. 3, Sec. 4, Sec. 9, Sec. 10, Sec. 11.

Possession of Firearms Is Prohibited during the event inside the Burning Man event/Black Rock City boundary fence, with the exception of county, state and federal certified law enforcement personnel under the color of law. ''Firearm'' means any device designed to be used as a weapon from which a projectile may be expelled through the barrel by the force of any explosion or other form of combustion. (NRS 202.253). The following areas in and around the Burning Man event site are affected:

T33½N, R24E,
Sec. 33; Sec. 34; Sec. 35.
T33N, R24E,
Sec. 2, Sec. 3, Sec. 4, Sec. 9, Sec. 10, Sec. 11.

Discharge of Firearms Is Prohibited for two miles in all directions from the event boundary, with the exception of law enforcement officers under color of law. The following areas in and around the Burning Man event site are affected:

T33N, R24E,
Sec. 1; Sec. 2; Sec. 3; Sec. 4; Sec. 5; Sec 6: E½; Sec 8; Sec. 9; Sec. 10; Sec. 11; Sec. 12; Sec. 13: N½ ; Sec. 13: SW¼; Sec. 14; Sec. 15; Sec. 16; Sec. 17: N½ ; Sec. 17: SE¼; Sec. 21: NE¼; Sec. 22: N½, Sec. 23: NW¼.
T33½N, R24E,
Sec. 25; Sec. 26; Sec. 27 Sec. 28; Sec. 29; Sec. 32; Sec. 33; Sec. 34; Sec. 35; Sec. 36.
T34N, R24E,
Sec. 33: NE¼; 33: S½; Sec. 34; Sec. 35; Sec. 36: S½.
T34N, R25E,
Sec. 33.
T33N, R25E,
Sec. 4; Sec. 9: W½ ; Sec. 9: NW¼ of the NE¼.

Aircraft Are Prohibited from Landing on the Playa for Five Miles in All Directions from the Event Boundary During the Event, with the exception of an authorized Burning Man landing strip for Burning Man clientele, law enforcement and emergency medical services. The following public lands are *Temporarily Closed to Aircraft Landing, Taking Off, and Taxiing, Except for Those Authorized (by Burning Man/Black Rock City LLC) and Emergency Aircraft:*

T33N, R23E,
Sec. 25: E½.
T33N, R24E,
Sec. 1; Sec. 2; Sec. 3; Sec. 4; Sec. 5: SE¼; Sec. 8: NE¼; Sec. 8: S½; Sec. 9; Sec. 10; Sec. 11; Sec.12; Sec. 13: W½;. Sec. 14; Sec. 15; Sec. 16; Sec. 17; Sec. 18: NE¼; Sec. 18: W½; Sec 19; Sec. 20; Sec. 21; Sec. 22: N½; Sec. 28: NW¼; Sec. 29; Sec. 30: NE¼.
T33½N, R24E,
Sec. 25; Sec. 26; Sec. 27; Sec. 28; Sec. 33: N½; Sec. 33: SE¼; Sec. 34; Sec. 35; Sec. 36.
T34N, R24E,
Sec. 23: NE¼;
Sec. 23: NE¼; Sec. 23: S½; Sec. 24; Sec. 25; Sec. 26; Sec. 27; Sec. 33: E½.
T33N, R25E.
Sec. 2: N½; Sec. 3: N½; Sec. 4.
T34N, R25E,
Sec.16; Sec. 21; Sec. 22: S½; Sec. 26 SW¼; Sec. 33; Sec. 34; Sec. 35.

A map showing these temporary closure, restrictions and prohibitions is available from the following BLM office: BLM-Winnemucca Field Office 5100 East Winnemucca Blvd., Winnemucca, Nevada 89445.

After this information is published in the **Federal Register**, the map will be published on the Winnemucca Field Office website at: www.nv.blm.gov/winnemucca.

FOR FURTHER INFORMATION CONTACT: Michael Bilbo, Outdoor Recreation Planner, or Les Boni, Assistant manager, Non-Renewable Resources, at (775) 623–1500, or write to: BLM-Winnemucca Field Office, 5100 East Winnemucca Blvd., Winnemucca, Nevada 89445.

Authority: 43 CFR 8364.

Penalty: Any person failing to comply with the closure orders may be subject to imprisonment for not more than 12 months, or a fine in accordance with the applicable provisions of 18 USC 3571, or both.

Dated: July 31, 2000.

Terry Reed,

Field Manager, Winnemucca Field Office.

[FR Doc. 00–20231 Filed 8–9–00; 8:45 am]

BILLING CODE 1310–HC–P

DEPARTMENT OF THE INTERIOR

Bureau of Land Management

[CO–600–00–1010–PG–241]

Northwest Colorado Resource Advisory Council Meeting

AGENCY: Bureau of Land Management, Interior.

ACTION: Notice of meeting.

SUMMARY: The next meeting of the Northwest Colorado Resource Advisory Council will be held on Wednesday September 20, 2000, at the Raftopoulos Ranch Headquarters located near Maybell, Colorado.

DATES: Wednesday September 20, 2000.

ADDRESSES: For further information, contact Lynn Barclay, Bureau of Land Management (BLM), 455 Emerson Street, Craig, Colorado 81625; Telephone (970) 826–5096.

SUPPLEMENTARY INFORMATION: The Northwest Resource Advisory Council (RAC) will meet on Wednesday September 20, 2000 at the Raftopoulos Ranch, 2984 County Road 94, Maybell, Colorado. The meeting will start at 8 a.m., and include discussions of Off-Highway Vehicles, RAC involvement with the USFS , and existing and future RAC subcommittees. BLM representatives will also provide the group information on the Pollock Bench Mountain Bike Trail, Fire Control and Management, and the Vermillion Cliffs Wilderness Inventory. In the afternoon, there will be a field trip to area public lands.

The meeting is open to the public. Interested persons may make oral statements at the meetings or submit written statements at the meeting. Per-person time limits for oral statements may be set to allow all interested persons an opportunity to speak.

Summary minutes of council meetings are maintained at the Bureau of Land Management Offices in Grand Junction and Craig, Colorado. They are available for public inspection and reproduction during regular business hours within thirty (30) days following the meeting.

Dated: August 4, 2000.

Richard Arcand,

Acting Center Manager, Northwest Center.

[FR Doc. 00–20239 Filed 8–9–00; 8:45 am]

BILLING CODE 4310–70–P

DEPARTMENT OF THE INTERIOR

Bureau of Land Management

[OR–958–6333–ET; GP0–0329; OR–55645]

Proposed Withdrawal and Opportunity for Public Meeting; Oregon

AGENCY: Bureau of Land Management, Interior.

ACTION: Notice.

SUMMARY: The Bureau of Land Management proposes to modify Public Land Order No. 7215 (PLO). The petition/application would withdraw approximately 173.80 acres of public lands from location and entry under the mining laws, but not the mineral leasing laws, for the remaining period of the PLO which expires on September 10, 2046, to protect wildlife habitat, wetlands, recreational values and portions of lands identified for future community expansion.

EFFECTIVE DATE: Comments and requests for a public meeting must be received by September 11, 2000.

ADDRESS: Comments and meetings requests should be sent to the Oregon/Washington State Director, BLM, P.O. Box 2965, Portland, Oregon 97208–2965.

FOR FURTHER INFORMATION CONTACT: Charles R. Roy, BLM Oregon/Washington State Office, 503–952–6189.

SUPPLEMENTARY INFORMATION: On (insert date signed), a petition was approved allowing the Bureau of Land Management to file an application to withdraw the following described public lands and non-Federal lands from location and entry under the United States mining laws (30 U.S.C. Ch. 2 (1994)), but not from leasing under the mineral leasing laws, subject to valid existing rights:

Willamette Meridian

T. 22 S., R. 13 W.,
Sec. 13, lot 1, W½SW¼NW¼, W½E½SW¼NW¼.

The area described above contains 68.80 acres in Douglas County.

T. 26 S., R. 14 W.,
Sec. 2, fractional lot 1, fractional SW¼NW¼;
Sec. 3, lot 1,2, and SE¼NE¼.

The area described above contains 102.70 acres in Coos County.

T. 35 S., R. 14 W.,
Sec. 18, lot 1.

The area described above contains 2.30 acres in Curry County.

The areas described aggregate 173.80 acres in Douglas, Coos, and Curry Counties.

The purpose of the proposed withdrawal would be to protect the wildlife habitat, wetlands, and recreational values of the area, portions of which may be needed for community expansion. It also assures the lands remain in public ownership until their disposal is determined to be in the public interest.

For a period of 90 days from the date of publication of this notice, all persons who wish to submit comments, suggestions, or objections in connection with the proposed withdrawal may present their views in writing to the State Director at the address indicated above.

Notice is hereby given that an opportunity for a public meeting is afforded in connection with the proposed withdrawal. All interested parties who desire a public meeting for the purpose of being heard on the proposed withdrawal must submit a written request to the State Director at the address indicated above within 90 days from the publication of this notice. Upon determination by the authorized officer that a public meeting will be held, a notice of the time and place will be published in the **Federal Register** at least 30 days before the scheduled date of the meeting.

For a period of 2 years from the date of publication of the original notice (*May 14, 1998*), the lands will be segregated as specified above unless the application is denied or canceled or the withdrawal is approved prior to that date. The temporary land uses which may be permitted during this segregative period include licenses, permits, rights-of-way, and disposal of vegetative resources other than under the mining laws.

Dated: August 3, 2000.

Sherrie L. Reid,

Acting, Chief Branch of Realty and Records Services.

[FR Doc. 00–20235 Filed 8–9–00; 8:45 am]

BILLING CODE 4310–33–P

DEPARTMENT OF THE INTERIOR

Bureau of Land Management

[UT–045–1040–ET; UTU–74938]

Public Land Order No. 7460; Withdrawal of Federal Mineral Estate Within the Red Cliffs Desert Reserve; Utah

AGENCY: Bureau of Land Management, Interior.

ACTION: Public land order.

SUMMARY: This order withdraws approximately 40,550 acres of Federal mineral estate from location and entry under the United States mining laws for 20 years for the Bureau of Land

Management to protect Mojave Desert Tortoise habitat within the Red Cliffs Desert Reserve. Additional non-Federal mineral estate within the boundaries of the Red Cliffs Desert Reserve would become subject to the withdrawal if acquired by the United States.

EFFECTIVE DATE: August 10, 2000.

FOR FURTHER INFORMATION CONTACT: Randy Massey, BLM St. George Field Office, 345 East Riverside Drive, St. George, Utah 84790, 435–688–3274.

By virtue of the authority vested in the Secretary of the Interior by Section 204 of the Federal Land Policy and Management Act of 1976, 43 U.S.C. 1714 (1994), it is ordered as follows:

1. Subject to valid existing rights, the Federal mineral estate in the following described lands is hereby withdrawn from location and entry under the United States mining laws (30 U.S.C. Ch. 2 (1994)), to protect Mojave Desert Tortoise habitat within the Red Cliffs Desert Reserve:

Salt Lake Meridian

T. 41 S., R. 13 W.,
Sec. 17, lot 3, lots 5 to 8, inclusive, SE¼NW¼, NE¼SW¼, S½SW¼, and SE¼;
Sec. 18, lots 2, 7, 8, lots 19 to 23, inclusive, west 10.486 chains of lot 24, lots 25 and 26, W½NE¼, E½NW¼, W½SE¼, and SE¼SE¼;
Sec. 19, lots 1 to 11, inclusive, lots 13 to 18, inclusive, N½NE¼, and SW¼NE¼;
Sec. 20, lots 1 and 2, E½, E½W½, NW¼NW¼, and SW¼SW¼;
Sec. 21, lots 1 to 4, inclusive, W½E½, and W½;
Sec. 22, lots 2, 3, 8, and 9, and SW¼SW¼;
Sec. 27, NW¼NE¼, NW¼, and NE¼SW¼;
Sec. 28, N½NE¼NE¼, NE¼SW¼NE¼NE¼, E½SE¼SW¼NE¼NE¼, and SE¼NE¼NE¼;
Sec. 29, lots 1 and 5, N½N½, N½SW¼NE¼, N½SW¼SW¼NE¼, N½SE¼SW¼NE¼, SE¼SE¼SW¼NE¼, SW¼NW¼, N½SE¼NW¼, and N½NW¼NE¼SE¼;
Sec. 30, lots 2, 3, 4, lots 13 to 18, inclusive, lot 21, and SE¼NE¼.

T. 41 S., R. 14 W.,
Sec. 13, SE¼NE¼, S½S½, and NE¼SE¼;
Sec. 15, lots 1 to 8, inclusive, W½E½, and W½;
Sec. 17, E½, SE¼NW¼, and SW¼;
Sec. 18, lots 7 and 8, SE¼SW¼, and S½SE¼;
Sec. 19, lots 1 to 8, inclusive, E½, and E½W½; secs. 20 and 21;
Sec. 22, lots 1 to 8, inclusive, W½E½, and W½;
Sec. 23, W½SW¼, embracing that portion of land west of the Interstate 15 corridor;
Sec. 24, N½, NE¼SW¼, N½NW¼SW¼, NE¼SW¼NW¼SW¼, E½SE¼SW¼, and SE¼;
Sec. 25, lots 1, 2, 7, 8, 9, and 10, SW¼NE¼, E½NE¼SW¼, E½W½SE¼SW¼, E½SE¼SW¼, and W½SE¼;
Sec. 26, lot 4, embracing that portion of land west of the Interstate 15 corridor;
Sec. 27, lots 1 to 9, inclusive, N½NE¼, SE¼NE¼, SE¼SW¼, and SW¼SE¼, embracing that portion of land west of the Interstate 15 corridor; secs. 28 and 29;
Sec. 30, lots 1 to 8, inclusive, E½, and E½W½;
Sec. 34, N½NW¼, and SW¼NW¼, embracing that portion of land north and west of the Interstate 15 corridor.

T. 41 S., R. 15 W.,
Sec. 13, W½ and SE¼;
Sec. 14;
Sec. 15, lots 1 to 4, inclusive, E½, and E½W½;
Sec. 16, lots 1 to 4, inclusive, and S½S½;
Sec. 17, lots 1 to 4, inclusive, N½, and S½S½;
Sec. 18, lots 1 to 9, inclusive, NE¼, E½NW¼, and NE¼SW¼;
Sec. 19, lots 1 to 4, inclusive, E½, and E½W½;
Sec. 20, E½, NW¼, N½SW¼, and SW¼SW¼SW¼;
Secs. 21 to 25, inclusive;
Sec. 26, N½ and SE¼;
Sec. 27, N½ and SW¼;
Sec. 28;
Sec. 29, NE¼, S½NE¼NE¼NW¼, SE¼NW¼NE¼NW¼, E½SW¼NE¼NW¼, SE¼NE¼NW¼, E½SE¼NW¼, E½W½SE¼NW¼, NE¼SW¼, SE¼NW¼SW¼, SW¼SW¼, SE¼SW¼, and SE¼;
Sec. 30, lots 1 to 4, inclusive, W½E½, SE¼NE¼, E½W½, and E½SE¼;
Sec. 31, lots 1 to 4, inclusive, E½, and E½W½;

Secs. 32 and 33;
Sec. 34, NW¼.

T. 42 S., R. 15 W.,
Sec. 6, lots 1 to 7, inclusive, S½NE¼, SE¼NE¼, SE¼NW¼, E½SW¼, and SE¼;
Sec. 7, lots 1 to 4, inclusive, and E½W½;
Sec. 17, lots 7, 9, and 10;
Sec. 20, NW¼SW¼, and W½NW¼.

T. 41 S., R. 16 W.,
Sec. 5, lots 1 to 11, inclusive, SW¼NE¼, S½NW¼, SW¼, and W½SE¼;
Sec. 6, lots 1 to 11, inclusive, S½NE¼, SE¼NW¼, E½SW¼, and SE¼;
Sec. 7, lots 1 to 4, inclusive, E½, and E½W½;
Sec. 8, lots 1 to 4, inclusive, W½E½, and W½;
Sec. 10, lot 4;
Sec. 11, lots 1 and 4, E½, and SE¼NW¼;
Sec. 12;
Sec. 13, lots 1 to 8, inclusive, S½N½, and S½;
Sec. 14, lots 1, 2, 7, and 8, S½N½, and NE¼SE¼;
Sec. 15, E½NE¼;
Sec. 17, lots 1 to 4, inclusive, W½E½, and W½;
Sec. 18, lots 1 to 4, inclusive, E½, and E½W½;
Sec. 19, lots 1 to 4, inclusive, E½, and E½W½;
Sec. 20;
Sec. 21, W½;
Sec. 24, E½, E½NW¼, NE¼SW¼, N½SE¼SW¼, and SE¼SE¼SW¼;
Sec. 25, E½, E½NE¼NW¼, SW¼NE¼NW¼, SE¼NW¼, SE¼NW¼SW¼, SW¼SW¼, and E½SW¼;
Sec. 29;
Sec. 30, lot 1, NE¼, and E½SE¼;
Sec. 31, NE¼NE¼;
Sec. 36.

T. 42 S., R. 16 W.,
Sec. 1, lots 1 to 4, inclusive, S½N½, and S½;
Sec. 3, lot 1, SE¼NE¼, and NE¼SE¼;
Sec. 11, SW¼NE¼, E½SE¼NE¼, N½NW¼, SW¼NW¼, SE¼NW¼, NE¼SW¼, SE¼SW¼, W½SE¼, and SE¼SE¼;
Sec. 12, N½, E½SW¼, and SE¼;
Sec. 14, N½NE¼ and NE¼NE¼NW¼.

T. 41 S., R. 17 W.,
Sec. 1, lots 1 to 12, inclusive, and S½;
Secs. 12 and 13;
Sec. 24, N½N½, SW¼NE¼, and SE¼NW¼.

The areas described aggregate approximately 40,550 acres in Washington County.

2. All mineral estate acquired in the future by the United States within the boundaries of the Red Cliffs Desert Reserve as depicted on the Red Cliffs Desert Reserve map maintained in the St. George BLM Field Office, will be subject to the terms and conditions of this withdrawal as described in Paragraph 1.

3. This withdrawal will expire 20 years from the effective date of this order unless, as a result of a review conducted before the expiration date pursuant to Section 204(f) of the Federal Land Policy and Management Act of 1976, 43 U.S.C. 1714(f) (1994), the Secretary determines that the withdrawal shall be extended.

Dated: July 25, 2000.

Sylvia V. Baca,

Assistant Secretary of the Interior.

[FR Doc. 00–20286 Filed 8–9–00; 8:45 am]

BILLING CODE 4310–DQ–P

DEPARTMENT OF THE INTERIOR

Bureau of Land Management

[CA–940–01–5410–10–B111; CACA 40073]

Conveyance of Mineral Interests in California

AGENCY: Bureau of Land Management, Interior.

ACTION: Notice of segregation.

SUMMARY: The private land described in this notice, aggregating 323 acres, is segregated and made unavailable for filings under the general mining laws and the mineral leasing laws to determine its suitability for conveyance

of the reserved mineral interest pursuant to section 209 of the Federal Land Policy and Management Act of October 21, 1976.

The mineral interests will be conveyed in whole or in part upon favorable mineral examination.

The purpose is to allow consolidation of surface and subsurface of minerals ownership where there are no known mineral values or in those instances where the reservation interferes with or precludes appropriate nonmineral development and such development is a more beneficial use of the land than the mineral development.

FOR FURTHER INFORMATION CONTACT: Kathy Gary, California State Office, Federal Office Building, 2800 Cottage Way, Room W–1928, Sacramento, California 95825, (916) 978–4677.

Serial No. CACA 40073.
T. 21 N., R. 4 E., Mount Diablo Meridian
Sec. 2, Lot 1, Por Lot 2, SE¼NE¼, N½NE¼SE¼, SW¼ NE¼, SE¼.
County-Butte.
Minerals Reservation—All coal and other minerals.

Upon publication of this Notice of Segregation in the **Federal Register** as provided in 43 CFR 2720.1–1(b), the mineral interests owned by the United States in the private lands covered by the application shall be segregated to the extent that they will not be subject to appropriation under the mining and mineral leasing laws. The segregative effect of the application shall terminate by publication of an opening order in the **Federal Register** specifying the date and time of opening; upon issuance of a patent or other document of conveyance to such mineral interest; or two years from the date of publication of this notice, whichever occurs first.

David McIlnay,
Chief, Lands Section.
[FR Doc. 00–20287 Filed 8–9–00; 8:45 am]
BILLING CODE 4310–40–P

DEPARTMENT OF THE INTERIOR

Bureau of Land Management

[AK–932–1430–ET; F–020174, F–35871, F–35872]

Public Land Withdrawals; Fort Greely East Training Area, Fort Greely West Training Area, Fort Wainwright Yukon Training Area; Alaska

AGENCY: Bureau of Land Management, Interior.

ACTION: Notice.

SUMMARY: This notice provides official publication of the legal descriptions of the Fort Greely East Training Area, the Fort Greely West Training Area, and the Fort Wainwright Yukon Training Area as required by Section 3012(a) of Public Law 106–65 enacted October 5, 1999.

EFFECTIVE DATE: October 5, 1999.

FOR FURTHER INFORMATION CONTACT: Robbie J. Havens, BLM Alaska State Office, 222 West 7th Avenue, No. 13, Anchorage, Alaska 99513–7599, 907–271–5049.

SUPPLEMENTARY INFORMATION: The legal descriptions of the public land withdrawals for the Fort Greely East Training Area, the Fort Greely West Training Area, and the Fort Wainwright Yukon Training Area affected by Public Law 106–65 are as follows:

Fairbanks Meridian (FM)

(a) Fort Greely East Training Area (Formerly Fort Greely Air Drop Area)

A parcel of land situated approximately 2.5 miles southeast of Delta Junction, being located between the Richardson and Alaska Highways and more particularly described as:

Beginning at a point 1.08 miles, east of U.S.C. and G.S. Station ''Pillsbury,'' Latitude 63°47′ 00.309″ N., Longitude 145°47′ 24.713″ W., said point of beginning being 150 feet east of the centerline of the Richardson Highway;

Thence due east approximately 4.5 miles to the west bank of Granite Creek;

Thence in a generally northeasterly direction approximately 11.83 miles to a point which is situated on the west bank of the Granite Creek and further identified as being situated one mile southerly at right angles to the centerline of the Alaska Highway;

Thence northwesterly, parallel with and one mile southerly at right angles to the centerline of the Alaska Highway to a point situated approximately 1,394 feet due south of the southeast corner of section 13, T. 11 S., R. 11 E., FM;

Thence north approximately 1,394 feet to said southeast corner of section 13, T. 11 S., R. 11 E., FM;

Thence west one mile, north one mile, west two miles, north one mile, west one mile, and north one mile following the south and west boundaries of sections 13, 11, 10, and 4, T. 11 S., R. 11 E., FM;

Thence west one mile along the south boundary of section 32, T. 10 S., R. 11 E., FM;

Thence west 1,172.8 feet approximately along the south boundary of section 31, T. 10 S., R. 11 E., FM, to a point on the east boundary of the Fort Greely Military Reservation (Public Land Order (PLO) No. 255), which point is situated approximately 7,062 feet due south of the centerline of the Alaska Highway;

Thence due south approximately 8,628 feet to the point of intersection of the north line bounding a 160-acre parcel of land reserved by PLO No. 1153 for the use of Department of the Army;

Thence east along the north line of said parcel 1,000 feet;

Thence south along the east line of said parcel 7,000 feet;

Thence west along the south line of said parcel 1,000 feet to the point of intersection of said boundary with the east boundary of the parcel of land reserved by PLO No. 255;

Thence south along said east boundary 6,000 feet;

Thence west along the south boundary of said reserve approximately 2.74 miles (14,479 feet) to a point on the east boundary line of section 27, T. 11 S., R. 10 E., FM;

Thence south two miles along the east boundary of sections 27 and 34, T. 11 S., R. 10 E., FM;

Thence south two miles, east one mile and south two miles along the east boundary of sections 14 and 23, T. 12 S., R. 10 E., FM;

Thence west approximately 0.75 mile to a point which is situated 150 feet easterly at right angles from the centerline of the Richardson Highway;

Thence southerly parallel to and 150 feet easterly from the centerline of the Richardson Highway approximately 4.75 miles to the point of beginning, excepting therefrom that portion of the W½ of section 26, T. 12 S., R. 10 E., FM, lying east of the Richardson Highway.

The area described contains approximately 51,590 acres.

(b) Fort Greely West Training Area (Formerly Fort Greely Maneuver Area)

A tract of land located in the Big Delta Area, and more particularly described as:

Beginning at the U.S.C. and G.S. Monument ''Big Delta Airport,'' Latitude 63°59′35″ N., Longitude 145°43′40″ W.;

Thence N. 04°55′47.3″ E., 11,997.64 feet to a point being at Latitude 64°01′32.868″ N., Longitude 145°43′16.607″ W.;

Thence due west to the mean high water line on the right bank of the Delta River, which point is the true point of beginning for this description;

Thence southerly along the right bank of the Delta River to the south boundary of the Fort Greely Military Reservation (PLO No. 255) to the southwest corner thereof;

Thence due east along the south boundary of the Fort Greely Military Reservation to a point on the north-south centerline of section 28, T. 11 S., R. 10 E., FM;

Thence south along the north-south centerlines of sections 28 and 33, T. 11 S., R. 10 E., FM, and sections 4, 9, and 16, T. 12 S. R. 10 E., FM to the center section monument of section 16;

Thence east to the west ¼ corner monument of section 15, T. 12 S., R. 10 E., FM;

Thence S. 0°05′ E., to the west section corner monument common to sections 15 and 22;

Thence east to the ¼ corner monument common to sections 15 and 22;

Thence south along the north-south centerline of sections 22, 27, and 34, T. 12 S., R. 10 E., FM, to the south ¼ corner of section 34;

Thence east 74 feet more or less, along the south boundary of section 34 to a point one-half mile west of the centerline of the existing Richardson Highway;

Thence southerly, parallel to and one-half mile west of said centerline to a point one-half mile due west of Donnelly, Alaska;

Thence N. 75°30′ W., 190,740 feet, more or less, to the east bank of Buchanan Creek;

Thence northerly along the east bank of Buchanan Creek and the east bank of Little Delta River to a point 11,560 feet, southerly from the point of confluence of Little Delta River and the Tanana River, which point is also located at Latitude 64°15′ N., Longitude 146°43′ W.;

Thence S. 52°40′ E., 160,843 feet, more or less, to a point identical with a point located at Latitude 63°59′ N., Longitude 145°55′ W.;

Thence N. 60°43′ E., 31,705 feet, more or less, to the point of beginning, excepting therefrom a five-acre tract of land embraced in U.S. Survey No. 5633 (Trade and Manufacturing Patent 50–75–0116), located at the confluence of the Little Delta River East and West Forks.

The area described contains approximately 571,995 acres.

(c) Fort Wainwright Yukon Training Area (Formerly Fort Wainwright Maneuver Area)

A parcel of land situated approximately 20 miles southeast of Fairbanks, Fourth Judicial District, State of Alaska:

T. 1 S. R. 3 E., unsurveyed,
Sec. 22, E½SE¼;
Sec. 23, S½;
Sec. 24, S½;
Secs. 25 and 26;
Sec. 27, E½E½;
Sec. 34, E½E½;
Secs. 35 and 36.
T. 2 S., R. 3 E., unsurveyed,
Secs. 1 and 2;
Sec. 3, E½E½;
Sec. 10, E½E½;
Secs. 11 and 12;
Sec. 14, N½, W½SW¼;
Sec. 15, E½E½;
Sec. 22, E½NE¼, NE¼SE¼;
Sec. 23, W½NW¼, S½SE¼, NE¼SE¼;
Sec. 24, S½;
Sec. 25;
Sec. 26, E½, SW¼, S½NW¼, NE¼NW¼.
T. 1 S., R. 4 E., unsurveyed,
Sec. 19, S½;
Sec. 21, SE¼;
Sec. 22, S½;
Sec. 23, S½;
Sec. 24, S½;
Secs. 25 to 36, inclusive.
T. 2 S., R. 4 E., unsurveyed,
Secs. 1 to 16, inclusive;
Sec. 17, E½;
Sec. 19, S½;
Sec. 20, E½, SW¼;
Secs. 21 to 30, inclusive;
Secs. 34, 35, and 36.
T. 3 S., R. 4 E., unsurveyed,
Secs. 1, 2, and 3;
Secs. 10 to 15, inclusive;
Secs. 22 to 27, inclusive;
Secs. 34, 35, and 36.
T. 4 S., R. 4 E., unsurveyed,
Sec. 1;
Sec. 2, E½, NW¼, N½SW¼;
Sec. 3, NE¼, N½NW¼;
Sec. 12, NE¼, N½NW¼.
T. 1 S., R. 5 E., unsurveyed,
Sec. 19, S½;
Sec. 20, S½;
Sec. 21, S½;
Sec. 22, S½;
Sec. 23, S½;
Sec. 24, S½;
Secs. 25 to 36, inclusive.
T. 2 S., R. 5 E., unsurveyed,
Secs. 1 to 36, inclusive.
T. 3 S., R. 5 E., unsurveyed,
Secs. 1 to 36, inclusive, excepting therefrom that parcel of land withdrawn by Public Land Order (PLO) No.1345 (F–O12866) dated October 16, 1956, as amended by PLO No.1523, dated October 8, 1957.
T. 4 S., R. 5 E.,
Secs. 1 to 6, inclusive;
Sec. 7, lots 1, 2, and 3, E½, E½NW¼, NE¼SW¼;
Secs. 8 to 15, inclusive;
Sec. 16, N½, SE¼, N½SW¼;
Sec. 17, NE¼, N½NW¼, excepting therefrom that parcel of land withdrawn by PLO No. 1345 (F–012867) dated October 16, 1956, as amended by PLO No.1523, dated October 8, 1957.
T. 1 S., R. 6 E.,
That portion of Tract A, more particularly described as (protracted): sec. 19, S½;
Sec. 20, S½;
Sec. 21, S½;
Secs. 28 to 33, inclusive.
T. 2 S., R. 6 E., unsurveyed,
Secs. 1 to 36, inclusive.
T. 3 S., R. 6 E., unsurveyed,
Secs. 1 to 36, inclusive.
T. 4 S., R. 6 E.
Secs. 1 to 18, inclusive.
T. 2 S., R. 7 E., unsurveyed,
Secs. 1 to 36, inclusive.
T. 3 S., R. 7 E., unsurveyed,
Secs. 1 to 36, inclusive.
T. 4 S., R. 7 E.,
Secs. 1 to 5, inclusive;
Sec. 6, lots 1, 2, 3, and 4, E½, E½W½;
Sec. 7, lots l, 2, 3, and 4, E½, E½W½;
Secs. 8, 9, 10, and 11;
Sec. 12, N½, N½SW¼;
Sec. 14, N½NW¼, NW¼NE¼, SW¼NW¼;
Sec. 15, N½, N½SW¼, SW¼SW¼, NW¼SE¼;
Secs. 16 and 17;
Sec. 18, lots 1, 2, 3, and 4, E½, E½W½.
T. 2 S., R. 8 E., unsurveyed,
Sec. 5, W½, W½E½;
Secs. 6 and 7;
Sec. 8, W½, W½E½;
Sec. 17, W½, W½E½;
Secs. 18 and 19;
Sec. 20, W½, W½E½;
Sec. 29, W½, W½E½;
Secs. 30 and 31;
Sec. 32, W½, W½E½.
T. 3 S., R. 8 E.,
Sec. 5, W½, W½E½;
Sec. 6, lots 1, 2, 3, and 4, E½, E½W½;
Sec. 7, lots 1, 2, 3, and 4, E½, E½W½;
Sec. 8, W½, W½E½;
Sec. 17, W½, W½E½;
Secs. 18 and 19;
Sec. 20, W½, W½E½;
Sec. 29, W½, W½E½;
Secs. 30 and 31;
Sec. 32, W½, W½E½.
T. 4 S., R. 8 E.,
Sec. 5, NW¼, W½NE¼, NW¼SW¼;
Sec. 6, lots 1, 2, 3, and 4, E½, E½W½;
Sec. 7, lot 1 and NE¼NW¼.

The area described contains approximately 246,277.33 acres.

The areas described aggregate approximately 869,862 acres.

Copies of the legal description and maps of each area are available for public inspection in the following offices: Public Works, Business Management/Real Estate Section, 730 Quartermaster Road, Fort Richardson, Alaska 99505–6500; Public Works, Business Management/Real Estate Section, 1060 Gaffney Road #6500, Fort Wainwright, Alaska 99703–6500; and BLM Alaska State Office, Division of Lands, Minerals, and Resources, 222 West 7th Avenue, No. 13, Anchorage, Alaska 99513–7599.

Dated: July 21, 2000.

Donald W. Baggs,

Supervisor, Lands and Minerals Group, Division of Lands, Minerals, and Resources.

[FR Doc. 00–20288 Filed 8–9–00; 8:45 am]

BILLING CODE 4310–JA–P

DEPARTMENT OF THE INTERIOR

Bureau of Land Management

[OR–958–6333-ET, GP0–0322; OR–55655]

Notice of Proposed Withdrawal Correction, Oregon

AGENCY: Bureau of Land Management, Interior.

ACTION: Notice.

SUMMARY: This action corrects an error in the legal description in the notice of proposed withdrawal published in 65 FR page 38849, dated June 22, 2000, FR Doc. 00–15781. The land described as the W½ of sec. 36, T. 28 S., R. 32 E., Willamette Meridian, should read, W½ of sec. 16, T. 28 S., R. 32 E., Willamette Meridian.

Dated: August 2, 2000.

Robert D. DeViney, Jr.,

Chief, Branch Realty and Records Services.

[FR Doc. 00–20290 Filed 8–9–00; 8:45 am]

BILLING CODE 4310–33–U

DEPARTMENT OF JUSTICE

Lodging of Consent Decree Pursuant to the Comprehensive Environmental Response, Compensation and Liability Act

In accordance with 28 CFR 50.7 and Section 122 of the Comprehensive Response, Compensation and Liability Act (''CERCLA''), 42 U.S.C. 9622, the

Department of Justice gives notice that a proposed consent decree in *United States* v. *American Chemical Service, Inc., et al.,* No. 2:00CV438 (N.D. Indiana), and *State of Indiana* v. *American Chemical Service, Inc., et al.,* No. 2:00CV437 (N.D. Indiana), was lodged with the United States District Court for the Northern District of Indiana on July 14, 2000, pertaining to the implementation of the United States Environmental Protection Agency's selected remedial action for the American Chemical Service Superfund Site (''ACS Site''), Griffith, Lake County, Indiana. The proposed consent decree would resolve the United States' and the State of Indiana's civil claims against the 39 defendants named in this action, including the two owners/operators.

Under the proposed Consent Decree, the thirty-nine PRPs will undertake the remedial action for the ACS Site at an estimated cost of $45 million. Approximately $24.5 million of the funds in the ACS Special Account will be disbursed to the Settling Defendants under a specific schedule, as reimbursement for such construction and operation and maintenance costs as are approved by EPA. EPA will reserve $3.8 million from the Special Account for EPA's discretionary use for unforeseen response actions at the Site until 5 years after the remedial construction is complete. At that point, any funds remaining from the $3.8 million will be split equally with the PRP group, with the group's share being disbursed over time as reimbursement for EPA-approved operation and maintenance costs for the Site. EPA also will retain $2.275 million in the ACS Special Account for its future oversight costs for the Site, and $200,000 for the State of Indiana's future oversight costs for the Site. The Settling Defendants must pay any EPA or State oversight costs that exceed those amounts, until the entire remedy is certified as complete (*i.e.,* in approximately 30 years). If any amounts remain in the Special Account after the payments described above have been completed, the balance will be transferred to the Superfund.

The Department of Justice will receive, for a period of thirty (30) days from the date of this publication, comments relating to the proposed consent decree. Comments should be addressed to the Assistant Attorney General, Environment and Natural Resource Division, United States Department of Justice, Washington, DC 20530, and should refer to *United States* v. *American Chemical Service, Inc.,* No. 2:00CV438 (N.D. Ind.), and DOJ Reference No. 90–11–3–1094/2.

The proposed consent decree may be examined at: (1) The Office of the United States Attorney for the Northern District of Indiana, 1001 Main Street, Ste. A, Dyer, Indiana 46311–1234, (219–322–8576); and (2) the United States Environmental Protection Agency (Region 5), 77 West Jackson Boulevard, Chicago, Illinois 60604–3590, (contact Michael McClary (312–886–7163). A copy of the proposed consent decree may be obtained by mail from the Consent Decree Library, P.O. Box 7611, Washington, DC 20044. In requesting a copy, please refer to the referenced case and DOJ Reference Number and enclose a check in the amount of $37.00 for the consent decree only (148 pages at 25 cents per page reproduction costs), or $128.00 for the consent decree and all appendices (512 pages), made payable to the Consent Decree Library.

Joel M. Gross,

Chief, Environmental Enforcement Section, Environment and Natural Resources Division.

[FR Doc. 00–20297 Filed 8–9–00; 8:45 am]

BILLING CODE 4410–15–M

DEPARTMENT OF JUSTICE

Notice of Lodging of Consent Decree Pursuant to the Comprehensive Environmental Response, Compensation and Liability Act of 1980 (''CERCLA'')

Notice is hereby given under Section 122(d)(2) of CERCLA, 42 U.S.C. 9622(d)(2), and 28 CFR part 507 that a proposed Consent Decree (''Decree'') in *United States* v. *American Shizuki Corp., The Arnold Engineering Co. and TRW, Inc.*, Civil Action No. 8:00CV422, was lodged on July 28, 2000, with the United States District Court for the District of Nebraska.

The Complaint filed in the above-referenced matter alleges that Defendants American Shizuki Corp., The Arnold Engineering Co. and TRW, Inc. are liable under Sections 106 and 107 of the Comprehensive Environmental Response, Compensation and Liability Act of 1980, as amended (''CERCLA''), 42 U.S.C. 9606, 9607, for response costs and the performance of response actions related to Operable Unit 1 (''OU1'') at the Ogallala Ground Water Contamination Superfund Site (''Site'') in Ogallala, Nebraska. The Complaint, which was filed simultaneously on July 28, 2000 with the Consent Decree, sought injunctive relief requiring Defendants to abate an imminent and substantial endangerment to the public health and welfare and the environment from an actual and threatened release of hazardous substances by implementing the remedial action for OU1 set forth in EPA's April 23, 1999, Record of Decision (''ROD'').

Under the proposed Decree, Defendants shall finance and perform the Work in accordance with the Decree, the ROD, the Statement Of Work and all work plans and other plans set forth therein or developed by Defendants and approved by EPA pursuant to the Decree. Defendants shall also reimburse the United States for Past Response Costs and Future Response Costs (defined as costs related to the OU1 remedial work) as provided in the Decree. In exchange, the United States is granting Defendants a covenant not to sue or take administrative action against Defendants pursuant to Sections 106 and 107(a) of CERCLA and Section 7003 of RCRA, 42 U.S.C. 6973, for performance of the OU1 Work and for recovery of Past Response Costs and Future Response Costs.

The Department of Justice will receive, for a period of thirty (30) days from the date of this publication, comments relating to the proposed consent decree. Comments should be addressed to the Assistant Attorney General for the Environment and Natural Resources Division, Department of Justice, 950 Pennsylvania Avenue, NW., Washington, DC 20530, and should refer to *United States* v. *American Shizuki, Corp., The Arnold Engineering Co. and TRW, Inc.,* DOJ Ref. #90–11–3–06448. RCRA 7003(d). Commenters may request an opportunity for a public meeting in the affected area, in accordance with Section 7003(d) of RCRA, 42 U.S.C. 6973(d).

The proposed Decree may be examined at the office of the United States Attorney, District of Nebraska, 1620 Dodge Street, Suite 1400, Omaha, Nebraska 68102, (402) 221–4774; and the Region VII Office of the Environmental Protection Agency, 901 N. 5th Street, Kansas City, KS 66101, 931–551–7714. A copy of the proposed Decree may also be obtained by mail from the Consent Decree Library, P.O. Box 7611, Washington, DC 20044. In requesting a copy of the Consent Decree, please refer to the referenced case and enclose a check in the amount of $19.25 for a copy without attachments or a check in the amount of $69.75 for a copy with attachments (25 cents per

page reproduction costs), payable to the Consent Decree Library.

Bruce Gelber,

Deputy Chief, Environmental Enforcement Section, Environment and Natural Resources Division.

[FR Doc. 00–20294 Filed 8–9–00; 8:45 am]

BILLING CODE 4410–15–M

DEPARTMENT OF JUSTICE

Notice of Lodging of Proposed Consent Decree Under the Clean Air Act

Notice is hereby given that, on July 24, 2000, a Consent Decree in *United States* v. *Lloyd Manufacturing Corporation,* Civil Action No. CA–00–363–ML, was lodged in the United States District Court for the District of Rhode Island.

In this action the United States sought injunctive relief and civil penalties under section 113(b) of the Clean Air Act (''CAA''), 42 U.S.C. 74139(b) against Lloyd Manufacturing Corporation (''Lloyd''). The alleged violations include failure to obtain a permit required by the CAA, failure to install pollution control devices required by the CAA, and the failure to use low emissions coatings as required by the CAA at the fabric coating facility owned and operated by Lloyd in Warren, Rhode Island. The Consent Decree resolves all of these claims. The Consent Decree requires Lloyd to comply with the Clean Air Act, to pay a civil penalty to the United States of $240,000, and to purchase approximately 247 tons of air emission reduction credits costing a total of between $148,200 and $172,900 as restitution for its past excess emissions.

The Department of Justice will accept written comments relating to the proposed Consent Decree for thirty (30) days from the date of publication of this notice. Please address comments to the Assistant Attorney General, Environment and Natural Resources Division, Department of Justice, P.O. Box 7611, Ben Franklin Station, Washington, D.C. 20044 and refer to—*United States* v. *Lloyd Manufacturing Corporation,* Civil Action No. CA–00–363–ML (D. R.I.), DJ # 90–5–2–1–06624.

Copies of the proposed Consent Decree may be examined at the Office of the United States Attorney for the District of Rhode Island, Assistant United States Attorney, Fleet Center, 8th Floor, 50 Kennedy Plaza, Providence, Rhode Island 02903; at the U.S. Environmental Protection Agency, Region I, 1 Congress Street, Suite 1100, Boston, Massachusetts 02114. A copy of the proposed Consent Decree may also be obtained by mail at the Department of Justice Consent Decree Library, P.O. Box 7611, Washington, DC 20044. When requesting a copy of the proposed Consent Decree by mail, please enclose a check in the amount of $5.00 (twenty-five cents per page reproduction costs) payable to the ''Consent Decree Library.''

Bruce S. Gelber,

Deputy Chief, Environmental Enforcement Section, Environment and Natural Resources Division, Department of Justice.

[FR Doc. 00–20293 Filed 8–9–00; 8:45 am]

BILLING CODE 4410–15–M

DEPARTMENT OF JUSTICE

Notice of Lodging of a Consent Decree Pursuant to the Comprehensive Environmental Response, Compensation, and Liability Act

Notice is hereby given that a proposed consent decree in *United States* v. *Motorola, Inc., Honeywell International, Inc., and City of Phoenix, Arizona,* Civil No. 98–2049 PHX–RCB, was lodged on July 25, 2000, with the United States District Court for the District of Arizona (''Motorola Decree''). The proposed consent Decree would resolve certain claims under Section 107 of the Comprehensive Environmental Response, Compensation, and Liability Act of 1980, 42 U.S.C. 9607, as amended, brought against defendants Motorola, Incorporated, Honeywell International, Inc., and the city of Phoenix, Arizona (collectively ''Settling Defendants''), to recover response costs incurred by the Environmental Protection Agency in connection with the release of hazardous substances at Operable Units 1 and 2 of the Motorola 52nd Street Superfund Site in Phoenix, Arizona. The settlers are owners and/or operators of Operable Units 1 and 2 of the Site. Under the proposed Consent Decree, the Settling Defendants will pay $682,500 to the Hazardous Substances Superfund to reimburse the United States for Past Response Costs, 80% of Interim Response Costs, and all Future Oversight Costs. In addition to the proposed Consent Decree, Motorola and Honeywell are completing construction of the interim groundwater remedy for Operable Unit 2 of the site and will perform the first two years of operation and maintenance of the interim remedy.

The Department of Justice will receive, for a period of thirty (30) days from the date of this publication, comments relating to the proposed Consent Decree. Comments should be addressed to the Assistant Attorney General for the Environment and Natural Resources Division, Department of Justice, P.O. Box 7611, Washington, D.C. 20530, and should refer to *United States* v. *Motorola, Inc., et al.,* D. AZ, Civil No. 98–2049 PHX–RCB, DOJ Ref. #90–11–3–06000.

The Consent Decree may be examined at the Region 9 Office of the Environmental Protection Agency, 75 Hawthorne Street, San Francisco, CA 94105 and the United States Attorney's Office for the District of Arizona, 230 N. First Avenue, Room 4000, Phoenix, AZ 85025 c/o Assistant U.S. Attorney Ronald Gallegos. A copy of the proposed consent decree may be obtained by mail from the Consent Decree Library, Post Office Box 7611, Washington, DC 20044. In requesting copies please refer to the referenced case and enclose a check in the amount of $11.25 (25 cents per page reproduction costs), payable to the Consent Decree Library.

Joel M. Gross,

Chief, Environmental Enforcement Section, Environment and Natural Resources Division.

[FR Doc. 00–20291 Filed 8–9–00; 8:45 am]

BILLING CODE 4410–15–M

DEPARTMENT OF JUSTICE

Notice of Lodging of Consent Decree Pursuant to the Comprehensive Environmental Response, Compensation and Liability Act

In accordance with Department of Justice policy codified at 28 CFR 50.7 and Section 122 of CERCLA, 42 U.S.C. 9622, notice is hereby given that on July 25, 2000, three proposed Consent Decrees in *United States* v. *Raymond C. Wolf, et al.,* Civ. Action No. 1:99–CV–01032, were lodged with the United States District Court for the Northern District of Ohio. The three proposed Consent Decrees resolve the claims of the United States for recovery of response costs incurred by the United States in connection with the Lincoln Fields Superfund Removal Site (''Site'') in Madison Township, Ohio under section 107(a) of the Comprehensive Environmental Response, Compensation and Liability Act of 1980 (''CERCLA''), as amended, 42 U.S.C. 9607(a), against Raymond C. Wolf and Joanne R. Wolf (''the Wolfs''), Charles R. Sell and Wanda J. Sell (''the Sells''), and Dale M. Eberts (''Eberts'') (collectively, ''Settling Defendants''). Each of the Settling Defendants are owners and operators of the Site, a portion of which was operated for twenty years as a dry cleaning business. EPA incurred approximately $12.3 million in

conducting a removal action to address releases of tetrachloroethylene (or ''PCE'') from the dry cleaning operation in the soil and groundwater at the site. Under the terms of the Wolf Consent Decree, the Wolfs agree to pay the United States $10,000 in response costs within 90 days of entry of the Consent Decree. In addition, the Wolfs agree to pledge to the United States 75% of the value of a piece of property (currently valued at approximately $800,000), which is a portion of the Site, upon its transfer. In consideration for these payments, the Wolfs will receive a covenant not to sue for Site response costs (which, based on certain conditions, extends to future Successors in Interest or Assigns of the Wolfs' property) and contribution protection. Under the terms of the Sells Consent Decree, the Sells agree to pay the United States $2,000 in response costs within 30 days of entry of the Consent Decree. In consideration for this payment, the Sells will receive a covenant not to sue for Site response costs and contribution protection. Under the terms of the Eberts Consent Decree, Dale Eberts agrees to pay the United States $5,000 in response costs within 30 days of entry of the Consent Decree. In consideration for this payment, Eberts will receive a covenant not to sue for Site response costs and contribution protection. Each of these settlements is based on the Settling Defendants' limited ability to pay.

The Department of Justice will receive for a period of thirty (30) days from the date of this publication comments relating to the proposed Consent Decrees. Comments should be addressed to the Assistant Attorney General of the Environment and Natural Resources Division, Department of Justice, 950 Pennsylvania Avenue, NW, Washington, D.C. 20530, and should refer to *United States* v. *Raymond C. Wolf, et al.* Civ. Action No. 1:99–CV–01032; D.J. Ref. No. 90–11–3–06281.

The Consent Decrees may be examined at the Office of the United States Attorney, 1800 Bank One Center, 600 Superior Avenue East, Cleveland, Ohio 44114–2600, and at the United States Environmental Protection Agency, Region 5, 77 West Jackson Boulevard, Chicago, Illinois 60604–3590. A copy of the Consent Decrees may also be obtained by mail from the Consent Decree Library, P.O. Box 7611, U.S. Department of Justice, Washington, D.C. 20044–7611. In requesting a copy of the Consent Decrees, please enclose a check payable to the Consent Decree Library in amount of $16.75 (67 pages at 25 cents per page reproduction cost) for all three Consent Decrees; or $8.75 (35 pages at 25 cents per page reproduction cost) for the Wolf Consent Decree; $4.00 each (16 pages at 25 cents per page reproduction cost) for the Sells Consent Decree and the Eberts Consent Decree.

Joel M. Gross,

Chief, Environmental Enforcement Section, Environment & Natural Resources Division.

[FR Doc. 00–20292 Filed 8–9–00; 8:45 am]

BILLING CODE 4410–15–M

DEPARTMENT OF JUSTICE

Notice of Lodging of Consent Decree Under Section 107 of the Comprehensive Environmental Response, Compensation and Liabilities Act

Notice is hereby given that on July 26, 2000 a proposed Consent Decree (''Decree'') in *United States* v. *Spokane Metals Co., et al.,* Civil Action No. CS–00–0255–FZS (E.D. Wash.), was lodged with the United States District Court for the Eastern District of Washington. The United States filed this action pursuant to sections 106 and 107 of the Comprehensive Environmental Response, Compensation, and Liability Act (''CERCLA''), 42 U.S.C. 9606 and 9607, for recovery of response costs incurred by the United States as a result of releases of various hazardous substances at the Spokane Junkyard and Associated Sites in Spokane, Washington. During its years of operation, the Spokane Metals Company purchased scrap items from many sources in eastern Washington and northern Idaho, including many used electrical transformers, large industrial batteries and large mercury switches. Releases of hazardous substances from these items over several decades contaminated the 12.5 acre site.

This Decree will require the named defendants to reimburse the United States $680,000 for costs incurred in responding to the releases of hazardous substances, implement institutional controls, provide for the operation and maintenance at the Site, and pay EPA's future oversight costs. The Consent Decree also includes three federal PRPs as Settling Federal Agencies: the Department of Energy's Bonneville Power Administration; the Department of the Interior's Bureau of Reclamation; and the Department of the Navy.

The Department of Justice will receive for a period of thirty (30) days from the date of this publication comments relating to the Decree. Comments should be addressed to the Assistant Attorney General of the Environment and Natural Resources Division, Department of Justice, Washington, D.C. 20530, and should refer to, *United States* v. *Spokane Metals Co., et al.,* Civil Action No. CS–00–0255–FZS (E.D.Wash.) and D.J. Ref. #90–11–3–1020.

The Decree may be examined at the office United States Department of Justice, Environment and Natural Resources Division, Denver Field Office, 999 18th Street, North Tower Suite 945, Denver, Colorado, 80202. A copy of the Decree may also be obtained by mail from the Department of Justice Consent Decree Library, P.O. Box 7611, Washington, D.C. 20044–7611. In requesting a copy, please enclose a check in the amount of $15.25 for the Decree (25 cents per page reproduction cost) payable to the Consent Decree Library.

Bruce Gelber,

Deputy Chief, Environment and Natural Resources Division, Environmental Enforcement Section.

[FR Doc. 00–20295 Filed 8–9–00; 8:45 am]

BILLING CODE 4410–15–M

DEPARTMENT OF JUSTICE

Lodging of Consent Decree Under the Clean Air Act

Under 28 CFR 50.7, notice is hereby given that on July 25, 2000, a proposed consent decree in the case *United States* v. *USX Corporation*, Civil Action No. 99CV536JM, was lodged with the United States District Court for the Northern District of Indiana.

In this action the United States sought penalties for violations of Section 112(c) of the Clean Air Act, 42 U.S.C. 7412(c), and the National Emission Standard for benzene waste, 40 CFR Part 61, at its integrated steel plant located in Gary, Indiana. The proposed consent decree requires USX Corporation to pay $587,000 in civil penalties and to remove transformers containing 45,000 pounds of poly-chlorinated biphenyls (PCBs) as a supplemental environmental project.

The Department of Justice will receive for a period of thirty (30) days from the date of this publication comments relating to the consent decree. Comments should be addressed to the Assistant Attorney General, Environment and Natural Resources Division, 950 Pennsylvania Avenue, NW., Washington, DC 20530, and should refer to *United States* v. *USC Corporation*, No. 99CV536JM, D.J. Ref. 90–5–2–1–06476.

The consent decree may be examined at the Office of the United States Attorney, 1001 Main St., Suite A, Dyer, Indiana 46311, and at U.S. EPA Region

5, 77 West Jackson Boulevard, Chicago, Illinois 60604. A copy of the consent decree may also be obtained by mail from the Consent Decree Library, P.O. Box 7611, U.S. Department of Justice, Washington, DC 20044–7611. In requesting a copy, please enclose a check in the amount of $6.25 (25 cents per page reproduction cost) payable to the Consent Decree Library.

Joel M. Gross,

Chief, Environmental Enforcement Section, Environment and Natural Resources Division.

[FR Doc. 00–20296 Filed 8–9–00; 8:45 am]

BILLING CODE 4410–15–M

DEPARTMENT OF JUSTICE

Notice of Lodging of Consent Decree Under the Comprehensive Environmental Response, Compensation and Liability Act (''CERCLA'')

Pursuant to section 122(d)(2) of CERCLA, 42 U.S.C. 9622(d)(2), notice is hereby given that on July 27, 2000, a proposed Consent Decree in *United States* v. *Ware Shoals Power & Water, Inc., and Nancy T. Benton,* Civil Action No. 8–99–2346–13, was lodged with the United States District Court for the District of South Carolina.

In this action the United States sought to recover response costs incurred by the Environmental Protection Agency (''EPA'') during the performance of a response action to address releases and threatened released of hazardous substances at the Ware Shoals Dyeing and Printing Superfund Site in Ware Shoals, South Carolina. The Decree resolves the liability of Defendants Ware Shoals Power & Water, Inc., and Nancy T. Benton (collectively ''Defendants''), for these costs. The Defendants collectively will pay $55,000 to the Hazardous Substances Superfund in reimbursement of EPA's costs. In addition, Defendant Ware Shoals will convey the Site property to the Town of Ware Shoals by deed for a purchase price of no more than $10. The Department of Justice will receive for a period of thirty (30) days from the date of this publication comments relating to the Consent Decree. Comments should be addressed to the Assistant Attorney General, Environment and Natural Resources Division, P.O. Box 7611, U.S. Department of Justice, Washington, DC 20044–7611, and should refer to *United States* v. *Ware Shoals Power & Water, Inc., and Nancy T. Benton,* D.J. Ref. 90–11–3–06634.

The Consent Decree may be examined at the Office of the United States Attorney, District of South Carolina, 105 North Spring Street, Suite 200, Greenville, South Carolina 29601, and at EPA Region 4, Atlanta Federal Center, 61 Forsyth Street, SW., Atlanta, Georgia 30303. A copy of the Consent Decree may also be obtained by mail from the Consent Decree Library, P.O. Box 7611, U.S. Department of Justice, Washington, DC 20044–7611. In requesting a copy, please enclose a check in the amount of $5.75 (25 cents per page repoduction cost) payable to the Consent Decree Library.

Joel M. Gross,

Chief, Environmental Enforcement Section, Environment & Natural Resources Division.

[FR Doc. 00–20298 Filed 8–9–00; 8:45 am]

BILLING CODE 4410–15–M

DEPARTMENT OF LABOR

Mine Safety and Health Administration

Petitions for Modification

The following parties have filed petitions to modify the application of existing safety standards under section 101(c) of the Federal Mine Safety and Health Act of 1977.

1. Pine Ridge Coal Company

[Docket No. M–2000–085–C]

Pine Ridge Coal Company, 50 School House Road, Seth, West Virginia 25181 has filed a petition to modify the application of 30 CFR 75.1002 (location of trolley wires, trolley feeder wires, high-voltage cables and transformers) to its Whites Branch Mine (I.D. No. 46–08827) located in Boone County, West Virginia. The petitioner requests a modification to its previously granted petition for modification, docket number M–98–004–C, allowing 2400 volt cables to be used inby the last open crosscut at the working continuous miner sections at the Pine Ridge Coal Company, Robin Hood No. 9 Mine (I.D. No. 46–02143), to be transferred to Pine Ridge Coal Company's Whites Branch Mine (I.D. No. 46–08827), where equipment will be transferred and production begins the first of August 2000. The petitioner asserts that the proposed alternative method would provide at least the same measure of protection as the existing standard.

2. The United Mine Workers of America

[Docket No. M–2000–086–C]

The United Mining Workers of America, P.O. Box 28, Castlewood, Virginia 24224 has filed a petition to modify the application of 30 CFR 75.1712–2 (location of surface facility) on behalf of the Sea ''B'' Mining Company, Silver Creek Mine (I.D. No. 44–16895) located in Tazewell County, Virginia. The petitioner requests modification of the existing standard to require suitable transportation be provided for miners traveling to and from the centrally located bathing facility. The petitioner states that the miners have to crawl in mud, coal dust, oil, grease, and other contaminants in the underground mine environment and then drive to the centrally located bathing facility which creates unsafe conditions for the miners, and conflicts with applicable state highway laws that promote safe operation of motor vehicles. The petitioner asserts that the existing standard would result in a diminution of safety to the miners.

3. The Pittsburgh & Midway Coal Mining Company

[Docket No. M–2000–087–C]

The Pittsburgh & Midway Coal Mining Company, P.O. Box 6518, Englewood, Colorado 80155–6518 has filed a petition to modify the application of 30 CFR 75.1700 (oil and gas wells) to its North River No. 1 Mine (I.D. No. 01–00759) located in Fayette County, Alabama. The petitioner proposes to plug and abandon oil and gas wells, and mine through the oil and gas wells with a longwall mining machine instead of maintaining a 300 foot barrier around the well. The petitioner asserts that the proposed alternative method would provide at least the same measure of protection as the existing standard.

4. Elk Run Coal Company, Inc.

[Docket No. M–2000–088–C]

Elk Run Coal Company, Inc., Box 497, Sylvester, West Virginia 25193 has filed a petition to modify the application of 30 CFR 75.1700 (oil and gas wells) to its White Knight Mine (I.D. No. 46–08055) located in Boone County, West Virginia. The petitioner proposes to plug and mine through oil and gas wells using specific procedures outlined in this petition for modification. The petitioner asserts that the proposed alternative method would provide at least the same measure of protection as the existing standard.

5. Elk Run Coal Company, Inc.

[Docket No. M–2000–089–C]

Elk Run Coal Company, Inc., Box 497, Sylvester, West Virginia 25193 has filed a petition to modify the application of 30 CFR 75.1700 (oil and gas wells) to its Castle Mine (I.D. No. 46–07009) located in Boone County, West Virginia. The petitioner proposes to plug and mine

through oil and gas wells using the specific procedures outlined in this petition for modification. The petitioner asserts that the proposed alternative method would provide at least the same measure of protection as the existing standard.

6. Elk Run Coal Company, Inc.

[Docket No. M–2000–090–C]

Elk Run Coal Company, Inc., Box 497, Sylvester, West Virginia 25193 has filed a petition to modify the application of 30 CFR 75.350 (air courses and belt haulage entries) to its Castle Mine (I.D. No. 46–07009) located in Boone County, West Virginia. The petitioner requests a modification of the standard to allow air coursed through belt haulage entries to be used to ventilate active working places. The petitioner proposes to install a low-level carbon monoxide detection system in all belt entries at certain locations as an early warning fire detection system. The petitioner also proposes to adhere to other conditions. The petitioner asserts that the proposed alternative method would provide at least the same measure of protection as the existing standard.

7. Freeman United Coal Mining Company

[Docket No. M–2000–091–C]

Freeman United Coal Mining Company, 1999 Wabash Avenue, Suite 2008, Springfield, Illinois 62704–5364 has filed a petition to modify the application of 30 CFR 75.1909(b)(6) (nonpermissible diesel-powered equipment; design and performance requirements) to its Crown III Mine (I.D. No. 11–02632) located in Montgomery County, Illinois. The petitioner requests a modification of the standard to permit a diesel-powered road grader to be operated without front wheel brakes. The petitioner proposes to operate its diesel grader at a maximum speed of 10 miles per hour, lower the grader blade (mold board) to increase stopping capability in emergencies, and provide training for the grader operators on how to recognize appropriate levels of speed for different road and slope conditions. The petitioner asserts that the proposed alternative method would provide at least the same measure of protection as the existing standard.

8. 3-D Management Services, Inc.

[Docket No. M–2000–092-C]

3-D Management Services, Inc., P.O. Box 186, Madison, West Virginia 25130 has filed a petition to modify the application of 30 CFR 75.503 (permissible electric face equipment; maintenance) to its Campbells Creek #5 Mine (I.D. No. 46–08718) located in Kanawha County, West Virginia. The petitioner proposes to use a threaded ring and a spring-loaded device on battery plug connectors for mobile battery powered machines to prevent the plug connector from accidently disengaging while under load instead of using padlocks. The petitioner asserts that application of the existing standard would result in a diminution of safety to the miners and that the proposed alternative method would provide at least the same measure of protection as the existing standard.

9. Elk Run Coal Company, Inc.

[Docket No. M–2000–093-C]

Elk Run Coal Company, Inc., Box 497, Sylvester, West Virginia 25193 has filed a petition to modify the application of 30 CFR 75.1002–1(a) (location of other electric equipment; requirements for permissibility) to its White Knight Mine (I.D. No. 46–08055) located in Boone County, West Virginia. The petitioner proposes to use a Joy Technologies, Inc., high-voltage (4,160 volts) longwall mining machine at the face. The petitioner asserts that application of its alternative method will not result in a diminution of safety to the miners.

10. Elk Run Coal Company, Inc.

[Docket No. M–2000–094–C]

Elk Run Coal Company, Inc., Box 497, Sylvester, West Virginia 25193 has filed a petition to modify the application of 30 CFR 75.1002–1(a) (location of other electric equipment; requirements for permissibility) to its Castle Mine (I.D. No. 46-08055) located in Boone County, West Virginia. The petitioner proposes to use a Joy Technologies, Inc., high-voltage (4,160 volts) longwall mining machine at the face. The petitioner asserts that application of its alternative method will not result in a diminution of safety to the miners.

11. Contour Erection and Siding Systems, Inc., d/b/a Contour Steel

[Docket No. M–2000–006–M]

Contour Erection and Siding Systems, Inc., d/b/a/ Contour Steel, 17 Court Street, Buffalo, New York 14202 has filed a petition to modify the application of 30 CFR 56.15003 (protective footwear) to its American Rock Salt Mine (I.D. No. 30–03255) located in Livingston County, New York. The petitioner requests a modification of the existing standard to permit Contour employees who are Ironworkers, not to wear steel capped footwear while climbing structural columns, erecting reinforcing steel, or performing other work where foot protection would reduce their safety. The petitioner states that modification of the existing standard would apply only to Contour's employees who would be engaged in mining or other mine related work activities, and that application of the existing standard would compromise the safety of the Ironworkers and affect their job performance.

Request for Comments

Persons interested in these petitions are encouraged to submit comments via e-mail to ''comments@msha.gov,'' or on a computer disk along with an original hard copy to the Office of Standards, Regulations, and Variances, Mine Safety and Health Administration, 4015 Wilson Boulevard, Room 627, Arlington, Virginia 22203. All comments must be postmarked or received in that office on or before September 11, 2000. Copies of these petitions are available for inspection at that address.

Dated: July 28, 2000.

Carol J. Jones,

Director, Office of Standards, Regulations, and Variances.

[FR Doc. 00–20316 Filed 8–9–00; 8:45 am]

BILLING CODE 4510–43–P

DEPARTMENT OF LABOR

Pension and Welfare Benefits Administration

[Prohibited Transaction Exemption 2000–37; Exemption Application No. D–10624, et al.]

Grant of Individual Exemptions; The Banc Funds Company, LLC (TBFC)

AGENCY: Pension and Welfare Benefits Administration, Labor.

ACTION: Grant of individual exemptions.

SUMMARY: This document contains exemptions issued by the Department of Labor (the Department) from certain of the prohibited transaction restrictions of the Employee Retirement Income Security Act of 1974 (the Act) and/or the Internal Revenue Code of 1986 (the Code).

Notices were published in the **Federal Register** of the pendency before the Department of proposals to grant such exemptions. The notices set forth a summary of facts and representations contained in each application for exemption and referred interested persons to the respective applications for a complete statement of the facts and representations. The applications have been available for public inspection at the Department in Washington, DC. The

notices also invited interested persons to submit comments on the requested exemptions to the Department. In addition the notices stated that any interested person might submit a written request that a public hearing be held (where appropriate). The applicants have represented that they have complied with the requirements of the notification to interested persons. No public comments and no requests for a hearing, unless otherwise stated, were received by the Department.

The notices of proposed exemption were issued and the exemptions are being granted solely by the Department because, effective December 31, 1978, section 102 of Reorganization Plan No. 4 of 1978, 5 U.S.C. App. 1 (1996), transferred the authority of the Secretary of the Treasury to issue exemptions of the type proposed to the Secretary of Labor.

Statutory Findings

In accordance with section 408(a) of the Act and/or section 4975(c)(2) of the Code and the procedures set forth in 29 CFR part 2570, Subpart B (55 FR 32836, 32847, August 10, 1990) and based upon the entire record, the Department makes the following findings:

(a) The exemptions are administratively feasible;

(b) They are in the interests of the plans and their participants and beneficiaries; and

(c) They are protective of the rights of the participants and beneficiaries of the plans.

The Banc Funds Company, LLC (TBFC)

Located in Chicago, IL

[Prohibited Transaction Exemption 2000–37; Exemption Application No. D–10624]

Exemption

Section I. Covered Transactions

The restrictions of sections 406(a) and 406(b) of the Act and the sanctions resulting from the application of section 4975 of the Code, by reason of section 4975(c)(1)(A) through (D) of the Code, shall not apply, effective July 15, 1998, to: (1) The purchase or redemption of interests in the Banc Fund V, L.P. (the Partnership) by employee benefit plans (the Plans) investing in the Banc Fund V Group Trust (the BF V Group Trust), where TBFC, a party in interest with respect to the Plans, is the general partner of MidBanc V, L.P., which is, in turn, the general partner (the General Partner) of the Partnership; (2) the sale, for cash or other consideration, by the Partnership of certain securities that are held as Partnership assets, to a party in interest with respect to a Plan participating in the Partnership through the BF V Group Trust, where the party in interest proposes to acquire or merge with the portfolio company (the Portfolio Company) that issued such securities; and (3) the payment to the General Partner, by Plans participating in the Partnership through the BF V Group Trust, of an incentive fee (the Performance Fee) which is intended to reward the General Partner for the superior performance of investments in the Partnership.

This exemption is subject to the following conditions as set forth below in Section II.

Section II. General Conditions

(a) Prior to a Plan's investment in the BF V Group Trust and the Partnership, a Plan fiduciary which is independent of TBFC and its affiliates (the Independent Fiduciary) approves such investments on behalf of the Plan.

(b) Each Plan investing in the BF V Group Trust and the Partnership has total assets that are in excess of $50 million.

(c) No Plan may invest more than 10 percent of its assets in the BF V Group Trust, and the interests held by the Plan may not exceed 25 percent of the assets of the BF V Group Trust.

(d) No Plan may invest more than 25 percent of its assets in investment vehicles (*i.e.*, collective investment funds or separate accounts) managed or sponsored by TBFC and/or its affiliates.

(e) Prior to investing in the BF V Group Trust and the Partnership, each Independent Fiduciary contemplating investing therein receives a Private Placement Memorandum and its supplement containing descriptions of all material facts concerning the purpose, structure and the operation of the BF V Group Trust and the Partnership.

(f) An Independent Fiduciary which expresses further interest in the BF V Group Trust and Partnership receives—

(1) A copy of the BF V Group Trust Agreement outlining the organizational principles, investment objectives and administration of the BF V Group Trust, the manner in which shares in the Group Trust may be redeemed, the duties of the parties retained to administer the BF V Group Trust and the manner in which BF V Group Trust shares are to be valued; and

(2) A copy of the Partnership Agreement describing the organizational principles, investment objective and administration of the Partnership, the manner in which the Partnership interests may be redeemed, the manner in which Partnership assets are to be valued, the duties and responsibilities of the General Partner, the rate of remuneration of the General Partner, and the conditions under which the General Partner may be removed.

(g) If accepted as an investor in the BF V Group Trust and the Partnership, the Independent Fiduciary is—

(1) Furnished with the names and addresses of all other participating Plan and non-Plan investors in the Partnership;

(2) Required to acknowledge, in writing, prior to purchasing a beneficial interest in the BF V Group Trust (and a corresponding limited partnership interest in the Partnership) that such Independent Fiduciary has received copies of such documents; and

(3) Required to acknowledge, in writing, to the General Partner that such fiduciary is independent of TBFC and its affiliates, capable of making an independent decision regarding the investment of Plan assets, knowledgeable with respect to the Plan in administrative matters and funding matters related thereto, and able to make an informed decision concerning participation in the BF V Group Trust and the Partnership.

(h) Each Plan, including the trustee (the Trustee) of the BF V Group Trust, receives the following written disclosures from the General Partner with respect to its ongoing participation in the BF V Group Trust and the Partnership:

(1) Within 90 days after the end of each fiscal year of the BF V Group Trust as well as at the time of termination, an annual financial report containing a balance sheet for the BF V Group Trust and the Partnership as of the end of such fiscal year and a statement of changes in the financial position for the fiscal year, as audited and reported upon by independent, certified public accountants. The annual reports will also disclose the remuneration that has accrued or is paid to the General Partner;

(2) Within 60 days after the end of each quarter (except in the last quarter) of each fiscal year of the Partnership and the BF V Group Trust, an unaudited quarterly financial report consisting of at least a balance sheet for the Partnership and the BF V Group Trust as of the end of such quarter and a profit and loss statement for such quarter. The quarterly report will also specify the remuneration that is actually paid or accrued to the General Partner; and

(3) Such other written information as may be needed by the Plans (including copies of the proposed exemption and grant notice describing the exemptive relief provided herein).

(i) At least annually, the General Partner will hold a meeting of the Partnership, at which time, the Independent Fiduciaries of the participating Plans will have the opportunity to decide on whether the Partnership, the BF V Group Trust, the Trustee or the General Partner should be terminated as well discuss any aspect of the Partnership, the BF V Group Trust and the agreements promulgated thereunder with the General Partner.

(j) During each year of the BF V Group Trust and the Partnership, representatives of the General Partner will be available to confer by telephone or in person with independent Plan fiduciaries to discuss matters concerning the BF V Group Trust or the Partnership.

(k) The terms of all transactions that are entered into on behalf of the Partnership remain at least as favorable to a Plan investing in the BF V Group Trust as those obtainable in arm's length transactions with unrelated parties. In this regard, the valuation of assets in the Partnership that is done in connection with the distribution of any part of the General Partner's Performance Fee will be based upon independent market quotations or (where the same are unavailable) determinations made by an independent appraiser.

(l) In the case of the sale by the Partnership of Portfolio Company securities to a party in interest with respect to a participating Plan that occurs in connection with the acquisition of a Portfolio Company represented in the Partnership's portfolio, the party in interest may not be the General Partner, TBFC, any employer of a participating Plan, or any affiliate thereof, and the Partnership receives the same terms as is offered to other shareholders of a Portfolio Company.

(m) As to each Plan, the total fees paid to the General Partner and its affiliates constitute no more than ''reasonable compensation'' within the meaning of section 408(b)(2) of the Act.

(n) Any increase in the General Partner's Performance Fee is based upon a predetermined percentage of net realized gains minus net unrealized losses determined annually between the date the first contribution is made to the Partnership until the time the Partnership disposes of its last investment. In this regard,

(1) Except as provided below in Section II(o), no part of the General Partner's Performance Fee may be withdrawn before December 31, 2005, which represents the end of the Acquisition Phase (the Acquisition Phase) for the Partnership, and not until the BF V Group Trust has received distributions equal to 100 percent of its capital contributions made to the Partnership;

(2) Prior to the termination of the Partnership, no more than 75 percent of the Performance Fee credited to the General Partner may be withdrawn by the General Partner;

(3) The debit account established for the General Partner to calculate the Performance Fee (the Performance Fee Account) is credited annually with a predetermined percentage of net realized gains minus net unrealized losses, minus Performance Fee distributions;

(4) No portion of the Performance Fee may be withdrawn if the Performance Fee Account is in a deficit position; and

(5) The General Partner repays all deficits in its Performance Fee Account and it maintains a 25 percent cushion in such account prior to receiving any further distribution.

(o) During the Acquisition Phase of the Partnership only,

(1) The General Partner is entitled to take distributions with respect to the Performance Fee in the amount of any income tax liability it or its affiliates become subject to with respect to net capital gains of the Partnership, provided such gains are based upon the sale of Portfolio Company securities that is initiated by a third party in connection with a merger, tender offer or acquisition, and does not involve the exercise of discretion by the General Partner;

(2) The tax distributions are deducted from the Performance Fee;

(3) The General Partner repays to the Partnership any tax refund received to the extent a distribution has been made to such General Partner; and

(4) The General Partner provides the Trustee and the Plans with an annual report and accounting of all distributions and repayments attributable to income taxation of the General Partner and its affiliates, including written evidence that the distributions have been utilized exclusively to pay the income tax liability.

(p) The General Partner maintains, for a period of six years, the records necessary to enable the persons described in paragraph (q) of this Section II to determine whether the conditions of this exemption have been met, except that—

(1) A prohibited transaction will not be considered to have occurred if, due to circumstances beyond the control of the General Partner, the records are lost or destroyed prior to the end of the six year period; and

(2) No party in interest other than the General Partner shall be subject to the civil penalty that may be assessed under section 502(i) of the Act, or to the taxes imposed by section 4975(a) and (b) of the Code, if the records are not maintained, or are not available for examination as required by paragraph (q) below.

(q)(1) Except as provided in section (q)(2) of this paragraph and notwithstanding any provisions of subsections (a)(2) and (b) of section 504 of the Act, the records referred to in paragraph (p) of this Section II shall be unconditionally available at their customary location during normal business hours by:

(A) Any duly authorized employee or representative of the Department or the Internal Revenue Service;

(B) Any Independent Fiduciary of a participating Plan or any duly authorized representative of such Independent Fiduciary;

(C) Any contributing employer to any participating Plan or any duly authorized employee representative of such employer; and

(D) Any participant or beneficiary of any participating Plan, or any duly authorized representative of such participant or beneficiary.

(q)(2) None of the persons described above in subparagraphs (B)–(D) of this paragraph shall be authorized to examine the trade secrets of the General Partner or TBFC or commercial or financial information which is privileged or confidential.

Section III. Definitions

For purposes of this exemption,

(a) The term ''TBFC'' means The Banc Funds Company and any affiliate of TBFC as defined in paragraph (b) of Section III.

(b) An ''affiliate'' of TBFC includes—

(1) Any person directly or indirectly through one or more intermediaries, controlling, controlled by, or under common control with TBFC;

(2) Any officer, director or partner in such person; and

(3) Any corporation or partnership of which such person is an officer, director or a 5 percent partner or owner.

(c) The term ''control'' means the power to exercise a controlling influence over the management or policies of a person other than an individual.

(d) An ''Independent Fiduciary'' is a Plan fiduciary which is independent of TBFC and its affiliates and is either a Plan administrator, trustee, named fiduciary, as the recordholder of beneficial Interests in the BF V Group Trust or an investment manager.

(e) The term ''Portfolio Companies'' include commercial banks and other depository institutions such as savings banks, savings and loan associations, holding companies controlling those entities, and companies providing financial services in the United States, which include, but are not limited to, consumer finance companies and demutualizing life insurance companies.

(f) The term ''net realized gains'' refers to the excess of realized gains over realized losses.

(g) The term ''net realized losses'' refers to the excess of realized losses over realized gains.

(h) The term ''net unrealized losses'' refer to the excess of unrealized losses over unrealized gains.

(i) The term ''net unrealized gains'' refers to the excess of unrealized gains over unrealized losses. For a gain or loss to be ''realized,'' an asset of the Partnership must be sold for more than or less than its acquisition price. For a gain or loss to be ''unrealized,'' the Partnership asset must increase or decrease in value but not be sold.

For a more complete statement of the facts and representations supporting the Department's decision to grant this exemption, refer to the notice of proposed exemption (the Notice) that was published on May 23, 2000 at 65 FR 33360.

Effective Date: This exemption is effective as of July 15, 1998.

Written Comments

The Department received two written comments with respect to the Notice and no requests for a public hearing. The comments, which were submitted by TBFC, requested certain modifications to the Notice and the Summary of Facts and Representations (the Summary). Discussed below are TBFC's suggested changes to the Notice and the Summary, as well as the Department's responses with respect thereto.

1. *''Effective'' Dates.* TBFC has pointed out several discrepancies in the anticipated term of BF V as well as during the period in which the Performance Fee can typically be drawn. TBFC represents that the scheduled termination date of the Partnership is December 31, 2007, according to Section 9.02 of the Trust Agreement and Section 5 of the Partnership Agreement. However, TBFC states that the Notice indicates that the Partnership is scheduled to terminate on December 31, 2008 and the Performance Fee draw down period is scheduled to occur during 2007 and 2008. Thus, TBFC explains that the dates contained in the Notice are in arrears of the actual commencement, operation and termination of the Partnership.

In this regard, TBFC states that examples of these date discrepancies can be summarized in the following table:

FR page no.	Location	Comment
33362	Section II(n)(1)	Describes the beginning of the Performance Fee draw down period (i.e., the end of the Acquisition Phase) as being after December 31, 2006 when it really begins after December 31, 2005.
33364	Summary, Representation 6, second paragraph, second sentence.	TBFC notes that the expected termination date of the Partnership is correctly identified as December 31, 2007 here.
33365	Summary, Representation 10, third paragraph, first sentence.	Identifies the date after which Management Fees may be reduced (if return of capital has been sufficient) as December 31, 2006, when the date is December 31, 2005.
33366	Summary, Representation 11(c), first sentence	Describes the beginning of the Performance Fee draw down period as January 1, 2007 when the actual date is January 1, 2006.
33366	Summary, Representation 12, first paragraph, second sentence.	Describes the period over which the Performance Fee can be drawn as running through 2007 and 2008, when the actual years are 2006 and 2007.
33367	Summary, Representation 14, first and second sentences.	Identifies the expected termination date of the Partnership as December 31, 2008 when the actual date is December 31, 2007.
33370	Summary, Representation 21(k)(1), second sentence	Describes the Performance Fee draw down period as beginning after December 31, 2006 when the actual date is December 31, 2005.

In response to this comment, the Department wishes to emphasize its original understanding that TBFC would not organize the Partnership until after the final exemption had been granted. Assuming the Partnership had become operational then, there would be no discrepancies in the dates for the general draw down periods for the Performance Fee or the termination of the Partnership. Nevertheless, the Department has noted the aforementioned changes to the operative language of the Notice and the Summary. The Department has also modified Section II(n)(1) of the final exemption to reflect the fact that the Performance Fee can be drawn down after December 31, 2005.

At TBFC's request, the Department has also agreed to make the final exemption retroactive to July 15, 1998. TBFC explains that this is the date that the Partnership received its first cash contributions from investors.

2. *Other Clarifications.* TBFC has identified a typographical error on page 33364 of the Summary, in the fifth sentence of Footnote 6. In this regard, TBFC explains that the reference should be to ''BF III'' and not to ''BF II.''

In addition, TBFC observes that on page 33366 of the Summary, the word ''repay'' in Representation 11(f) should be substituted for the word ''prepay'' in the sentence stating ''The General Partner must prepay any deficit in the Performance Fee Account.''

In response to these comments, the Department has noted the aforementioned clarifications to the Summary.

For further information regarding TBFC's comment letters and other matters discussed herein, interested persons are encouraged to obtain copies of the exemption application file (Exemption Application No. D–10624) the Department is maintaining in this case. The complete application file, as well as all supplemental submissions

received by the Department, are made available for public inspection in the Public Documents Room of the Pension and Welfare Benefits Administration, Room N–5638, U.S. Department of Labor, 200 Constitution Avenue, NW, Washington, DC 20210.

Accordingly, after giving full consideration to the entire record, including TBFC's written comments, the Department has decided to grant the exemption subject to the modifications and clarifications described above.

FOR FURTHER INFORMATION CONTACT: Ms. Jan D. Broady of the Department, telephone (202) 219–8881. (This is not a toll-free number.)

Standard Insurance Company (Standard)

Located in Portland, OR

[Prohibited Transaction Exemption 2000–38; Exemption Application No. D–10705]

Exemption

Section I. Covered Transactions

The restrictions of section 406(a) of the Act and the sanctions resulting from the application of section 4975 of the Code, by reason of section 4975(c)(1)(A) through (D) of the Code, shall not apply, effective April 21, 1999, to (1) the receipt of common stock (Stock) of the StanCorp Financial Group, Inc. (the Holding Company), the parent of Standard, or (2) the receipt of cash (Cash) or policy credits (Policy Credits), by or on behalf of any eligible policyholder (the Eligible Member) of Standard which is an employee benefit plan (the Plan), including the Standard Group Life, Supplemental Life and AD&D Plan for Employees and Agents and the Standard Group Term and Short Term Disability Employees Plan (the Standard Welfare Plans), in exchange for such Eligible Member's interest in Standard, in accordance with the terms of a plan of demutualization (the Plan of Demutualization or Demutualization Plan) adopted by Standard and implemented pursuant to Chapter 732 of the Oregon Revised Statutes.[1]

In addition, the restrictions of section 406(a)(1)(E) and (a)(2) and section 407(a)(2) of the Act shall not apply, effective April 21, 1999, to the receipt or holding by the Standard Welfare Plans, of employer securities in the form of excess Holding Company Stock, in accordance with the terms of the Demutualization Plan.

The exemptions described above are subject to the following conditions:

(a) The Plan of Demutualization was implemented in accordance with procedural and substantive safeguards that were imposed under Oregon Insurance Law and was subject to review and supervision by the Director of the Department of Consumer and Business Services of the State of Oregon (the Director).

(b) The Director reviewed the terms of the options that were provided to Eligible Members of Standard, which included, but were not limited to the subject Plans, as part of his review of the Demutualization Plan, and only approved such Demutualization Plan following a determination that the Plan was fair and equitable to all Eligible Members and was not detrimental to the public.

(c) Each Eligible Member had an opportunity to vote to approve the Plan of Demutualization after full written disclosure was given to the Eligible Member by Standard.

(d) One or more independent fiduciaries of a Plan that was an Eligible Member received Holding Company Stock, Cash or Policy Credits, pursuant to the terms of the Demutualization Plan, and neither Standard nor any of its affiliates exercised any discretion or provided ''investment advice,'' within the meaning of 29 CFR 2510.3–21(c), with respect to such acquisition.

(e) With respect to the Standard Plans, where the consideration was in the form of Holding Company Stock, Northwestern Trust and Advisory Company, the independent Plan fiduciary appointed to represent the interests of each of the Standard Plans,

(1) Exercised its authority and responsibility to vote on behalf of the Standard Plans at the special meeting of Eligible Members on the proposal to approve the Demutualization Plan;

(2) Monitored the Holding Company Stock received by a Standard Plan; and

(3) Provided instructions with respect to the voting, the continued holding and the disposition of Holding Company Stock held by all of the Standard Plans.

(f) After each Eligible Member was allocated at least 52 shares of Holding Company Stock, additional consideration was allocated to Eligible Members who owned participating policies based on actuarial formulas that took into account each participating policy's contribution to the surplus of Standard which formulas have been approved by the Director.

(g) All Eligible Members that were Plans participated in the transactions on the same basis within their class groupings as other Eligible Members that were not Plans.

(h) No Eligible Member paid any brokerage commissions or fees in connection with the receipt of Holding Company Stock, nor has (or will) such Eligible Member pay any brokerage commissions or fees in connection with the implementation of the commission-free sales and purchase program.

(i) All of Standard's policyholder obligations will remain in force and will not be affected by the Plan of Demutualization.

Section II. Definitions

For purposes of this exemption:

(a) The term ''Standard'' means The Standard Insurance Company and any affiliate of Standard as defined in paragraph (b) of this Section II.

(b) An ''affiliate'' of Standard includes—

(1) Any person directly or indirectly through one or more intermediaries, controlling, controlled by, or under common control with Standard; (For purposes of this paragraph, the term ''control'' means the power to exercise a controlling influence over the management or policies of a person other than an individual.) and

(2) Any officer, director or partner in such person.

(c) The term ''Eligible Member'' means a policyholder who is eligible to vote and to receive consideration under Standard's Demutualization Plan. Such Eligible Member must have been a policyholder of Standard on September 28, 1998, the date the Plan of Demutualization was adopted by the Board of Directors of Standard.

(d) The term ''policy credit'' means an increase in the accumulation account value[2] (to which no surrender or similar charges are applied) in the general account or an increase in a dividend accumulation on a policy.

Effective Date: This exemption is effective as of April 21, 1999.

For a more complete statement of the facts and representations supporting the Department's decision to grant this exemption, refer to the notice of

[1] Unless otherwise noted, the client Plans and the Standard Welfare Plans and other Plans sponsored by Standard and its affiliates are collectively referred to as the Plans. In addition, unless otherwise noted, the Standard Welfare Plans and other Plans sponsored by Standard and its affiliates are together referred to as the Standard Plans.

[2] In general, a policy's accumulation account value is expressed in dollar terms and reflects contributions and interest credited under the policy, less expenses and withdrawals. Accumulation values may be applied for the purchase of annuity benefits, or depending on the provisions of the contract, withdrawn by the policyholder in a lump sum or installments. Under Standard's Plan of Demutualization, where a policy eligible for distributions under such Plan has an accumulation value, the policy's accumulation value will be increased by an amount equal to the distribution the policyholder is entitled to under the Plan.

proposed exemption (the Notice) that was published on May 23, 2000 at 65 FR 33370.

Written Comments

The Department received one written comment with respect to the Notice. The comment was submitted by Standard and it requested clarification to the Notice and the Summary of Facts and Representations (the Summary) of the Notice in certain areas. Discussed below is Standard's comment letter and the Department's responses to Standard's concerns.

1. *Citation of Oregon Law.* Standard represents that throughout the Notice, the reader is cited to ''Section 732 of the Oregon Revised Statutes.'' Unless a statutory number is included (*e.g.,* 732.600), Standard suggests that it is appropriate to cite to ''Chapter 732.''

In response to this comment, the Department has revised the operative language of the Notice by substituting the word ''Chapter'' for the word ''Section'' in the reference to the Oregon Revised Statutes. The Department also acknowledges corresponding modifications to the Notice, on pages 33372 and 33373 of the Summary, in Representations 8 and 9.

2. *Relevant Dates.* On page 33371 of the Notice, Section II of the Definitions states, in pertinent part, that ''[s]uch Eligible Member must have been a policyholder of Standard on December 17, 1997, the date the Plan of Demutualization was adopted by the Board of Directors of Standard.'' However, on page 33373 of the Summary, Representation 9 of the Notice indicates that December 17, 1998 was the day on which ''Standard's Board of Directors adopted the Demutalization Plan.''

Standard explains that December 17, 1997 was the date on which Standard publicly announced its Board of Directors' intention to pursue the Plan of Demutualization rather than December 17, 1998. In addition, Standard indicates that the Plan of Demutualization was subsequently adopted by its Board of Directors on September 28, 1998.

Finally, on page 33372 of the Summary, Representation 7 of the Notice states that the Director approved the Plan of Demutualization in January 1999. Standard wishes to clarify that the Plan was approved on February 12, 1999.

In response to these comments, the Department has revised Section II(c) of the Definitions to reflect the September 28, 1998 adoption date of Standard's Plan of Demutualization by its Board of Directors and acknowledges this change in Representation 9 of the Summary. In addition, the Department notes the February 12, 1999 approval date of Standard's Plan of Demutualization in Representation 7 of the Summary.

3. *Number of Outstanding Policies.* On page 33371 of the Notice, Representation 1 of the Summary discusses, in the fourth paragraph, the number of outstanding policies that were subject to provisions of the Act. Standard notes that the figures provided were only its preliminary estimates rather than final figures. After cross-checking and eliminating duplicate entries, Standard represents that approximately 27,600 of its policies were issued to pension plans or welfare plans that were governed by the Act. Of these policies, approximately 4,600 covered pension plans and 23,000 covered welfare benefit plans. In addition, Standard states that the same paragraph contains a reference to ''group health'' plans which are included within the ''welfare plan'' category. Standard wishes to point out that it does not issue a group health plan.

The Department notes the foregoing clarifications to Representation 1 of the Summary.

4. *Ownership of Standard's Affiliates.* On page 33371 of the Notice, Representation 3 of the Summary indicates that the assets of Standard Mortgage Investors and Standard Real Estate Investors are owned completely by Standard through Standard Management. For purposes of clarification, Standard represents that as of the effective date of the demutualization (*i.e.,* April 21, 1999), Standard Mortgage Investors and Standard Real Estate Investors were purchased by StanCorp Financial Group, the Holding Company. Therefore, Standard explains that these entities are currently owned by the Holding Company.

Similarly, on page 33371 of the Summary, Representation 3 states that Standard, through Standard Management, Inc., owns 100 percent of several named subsidiaries. As of the effective date of the Plan of Demutualization, Standard states that it sold Standard Management, Inc. and its subsidiaries to the Holding Company. Therefore, as of that date and currently, Standard indicates that the Holding Company owns 100 percent of Standard Management, Inc. and its subsidiaries.

In response to these comments, the Department acknowledges the foregoing clarifications to Representation 3 of the Summary.

5. *Policyholder Consideration.* On page 33373 of the Notice, Representation 9 of the Summary lists the Standard policyholders who were entitled to receive Cash in lieu of Stock. In addition to this list, Standard explains that public entities, such as States and their political subdivisions, also received Cash in lieu of Stock because of potential State constitutional and statutory restrictions on such entities receiving and owning Stock.

However, Standard asserts that on page 33373 of the Notice, the third paragraph of Representation 10 states that ''The decision to receive Holding Company Stock, Cash or Policy Credits by a Plan was made by one or more fiduciaries of such Plan which was independent of Standard and its affiliates.'' Standard represents that the decision regarding which policyholders would receive Stock, Cash or Policy Credits was determined by the Plan of Demutualization, as approved by the Director, except for those policyholders who received 99 or less shares or Stock, in which case the Plan fiduciary made the election to receive Cash or Stock.

The Department acknowledges this comment and is aware that Standard's Plan of Demutualization essentially governed the form of consideration that was distributed to an Eligible Member and that, except in limited instances, the Eligible Member had no choice in the allocation process. However, the Department believes that the sentence should be read in conjunction with the next sentence in the paragraph which states, in part, that ''* * * neither Standard nor any of its affiliates exercised discretion or provided 'investment advice' within the meaning of 29 CFR 2510.3–21(c), with respect to such acquisition.'' If read in this manner, the Department wishes to emphasize that the primary thrust of both sentences is the notion that Standard did not, in any way, influence or advise an independent Plan fiduciary to accept whatever form of consideration that was allocated to such Eligible Member.

For further information regarding Standard's comment letter and other matters discussed herein, interested persons are encouraged to obtain copies of the exemption application files [Exemption Application Nos. D–10705 and D–10604] the Department is maintaining in this case. The complete application file, as well as all supplemental submissions received by the Department, are made available for public inspection in the Public Documents Room of the Pension and Welfare Benefits Administration, Room N–5638, U.S. Department of Labor, 200 Constitution Avenue, NW., Washington, DC 20210.

Accordingly, after giving full consideration to the entire record, including Standard's written comment, the Department has decided to grant the exemption subject to the modifications and clarifications described above.

FOR FURTHER INFORMATION CONTACT: Ms. Jan D. Broady of the Department, telephone (202) 219–8881. (This is not a toll-free number.)

Standard & Poor's (S&P), Standard and Poor's Investment Advisory Services, LLC (SPIAS)

Located in New York, New York

[Prohibited Transaction Exemption 2000–39; Exemption Application No. D–10720]

Exemption

The restrictions of sections 406(a) and 406(b) of the Act and the sanctions resulting from the application of section 4975 of the Code, by reason of section 4975(c)(1)(A) through (F) of the Code, shall not apply to the provision of asset allocation services (the Service) by SPIAS to Plan participants and the receipt of fees by SPIAS from Service Providers in connection with the provision of such asset allocation services, provided that the following conditions are met.

I. General Conditions

A. The retention of SPIAS to provide the Service will be expressly authorized in writing by an Independent Fiduciary of each Plan.

B. SPIAS shall provide the Independent Fiduciary of each Plan with the following, in writing:

(1) Prior to authorization, a complete description of the Service and disclosures of all fees and expenses associated with the Service.

(2) Any other reasonably available information regarding the Service that the Independent Fiduciary requests.

(3) A contract for the provision of the Service which defines the relationship between SPIAS, the Service Providers and the Plan sponsor, and the obligations thereunder. Such contract shall be accompanied by a termination form with instructions on the use of the form. The termination form must expressly state that a Plan may terminate its participation in the Service without penalty at any time. However, a Plan which terminates its participation in the Service before the expiration of the contract will pay its pro-rata share of the fees that it would otherwise owe for the Service under the contract and, if applicable, any direct costs actually incurred by SPIAS which would have been recovered from the Plan but for the termination of the contract, including any direct setup expenses not previously recovered. Thereafter, the termination form shall be provided no less than annually.

(4) At least 45-days prior to the implementation of any material change to the Service or increase in fees or expenses charged for the Service, notification of the change and an explanation of the nature and the amount of the change in the Service or increase in fees or expenses.

(5) A copy of the proposed and final exemption, as published in the **Federal Register**.

(6) An annual report of Plan activity which summarizes the performance of the asset allocation categories provided to the Plan and provides a breakdown of all fees and expenses paid to SPIAS in connection with the provision of the Service to the Plan for the year. Such report shall be provided no more than 45 days after the period to which it relates. Upon the Independent Fiduciary's or Plan sponsor's request, such report may be provided more frequently.

C. SPIAS will provide each Plan participant with the following:

(1) Written notice that the Service is available and provided by SPIAS, an entity independent of the Service Provider and the Plan sponsor.

(2) Prior to using the Service, full written disclosures that will include information about SPIAS and a description of the Service.

(3) Access to SPIAS's website or paper-based communications which will clearly indicate that the Plan participant is receiving the Service from SPIAS, and that SPIAS is independent of the Service Provider.

(4) A risk tolerance questionnaire which must be completed prior to utilization of the Service.

D. Any investment advice given to a Plan participant by SPIAS under the Service will be based solely on the responses provided by the Plan participant through the Service's interactive computer program or through a paper or telephone interview and will be based on the application of an objective methodology developed by S&P Financial Information Service (S&P FIS) and the S&P Investment Committee.

E. Any investment advice given to a Plan participant will be implemented only at the express direction of the Plan participant.

F. The total fees paid to SPIAS and a Service Provider, in connection with the provision of the Service, by each Plan does not exceed ''reasonable compensation'' within the meaning of section 408(b)(2) of the Act.

G. The only fees which are payable to SPIAS in connection with the provision of the Service include, subject to negotiation, one or more of the following:

(1) An annual flat fee based on a fixed dollar amount per Plan participant for the Service. This fee may be paid by the Plan, Plan sponsor, Plan participant or the Service Provider.

(2) A technology licensing fee payable by the Service Provider in the first year that the Service is provided to a Plan. The fee will be a fixed dollar amount based on the number of Plan participants and beneficiaries contained on the Service Provider's record-keeping system. Each time the number of Plan participants and beneficiaries on the Service Provider's record-keeping system increases by 10%, an additional fixed dollar amount based on the increase in Plan participants and beneficiaries will be assessed and charged to the Service Provider for the new participants and beneficiaries (the Revised Technology Fee).

(3) For subsequent years, SPIAS will charge the Service Provider an annual technology maintenance fee equal to 20% of the technology licensing fee charged to the Service Provider in the first year plus 20% of the Revised Technology Fee.

(4) SPIAS will charge the Plan or Plan sponsor an Internet customization fee where a Plan sponsor contracts directly with SPIAS for the provision of the Service. This flat fee will be based on the time spent by SPIAS personnel on its customization of the Service for the particular Plan.

(5) For those Plan sponsors electing to receive a Plan analysis report, an annual flat fee based on a fixed dollar amount per Plan investment analysis report. This fee will be paid by the Plan sponsor or Service Provider.

H. No portion of any fee or other consideration payable by the Plans or the Plan sponsor to S&P or SPIAS in connection with the Service will be received or shared with a Service Provider.

I. Neither the fees charged nor the compensation received by SPIAS will be affected by the investment elections or the decisions made by the Plan participants and beneficiaries regarding investment of the assets in their accounts.

J. Each Service Provider shall represent to SPIAS that it will not impose any additional fees and/or charges (relating to the investment products made available to Plans) on Plans who contract for the Service unless such fees and charges are imposed on the Service Provider's

similarly situated clients who do not contract for the Service.

K. All asset allocations are reviewed and approved by the S&P Investment Policy Committee (IPC) before they are made available to the Plan.

L. No Service Provider will at any time own any interest, by vote or value in SPIAS, and neither SPIAS nor any affiliates will own any interest, by vote or value in a Service Provider.

M. The annual revenues derived by SPIAS from any one Service Provider shall not constitute more than 5% of the annual revenues of S&P FIS.

N. S&P will guarantee the payment of any liabilities of SPIAS that may arise by reason of a breach of a fiduciary duty described in section 404 of the Act or a violation of the prohibited transaction provisions in section 406 of the Act and 4975 of the Code.

O. SPIAS will maintain for a period of six years, the records necessary to enable the persons described in paragraph (P) of this section to determine whether the conditions of the exemption are met, including records of the recommendations made to Plan participants and beneficiaries, except that—

(1) A prohibited transaction will not be considered to have occurred if, due to circumstances beyond the control of SPIAS, the records are lost or destroyed prior to the end of the six year period.

(2) No party in interest, other than SPIAS shall be subject to the civil penalty that may be assessed under section 502 (i) of the Act, or the taxes imposed by section 4975(a) and (b) of the Code if records are not maintained or not available for examination as required by this paragraph and paragraph P(1) below.

P. (1) Except as provided in subparagraph (2) of this paragraph and notwithstanding any provisions of subsections (a)(2) and (b) of Section 504 of the Act, the records referred to paragraph (O) of this section are unconditionally available at their customary location for examination during normal business hours by—

(a) Any duly authorized employee or representative of the Department of Labor, the Internal Revenue Service, or the Securities and Exchange Commission;

(b) Any fiduciary of a participating Plan or any duly authorized representative of such fiduciary;

(c) Any contributing employer to any participating Plan, any duly authorized representative of such employer or an employee organization whose members are participants and beneficiaries of a participating Plan; or (d) Any Plan participant or beneficiary of any participating Plan or any duly authorized representative of such Plan participant or beneficiary.

(2) None of the persons described in paragraph (1)(b)–(d) of this paragraph (P) shall be authorized to examine trade secrets of SPIAS, or commercial or financial information which is privileged or confidential.

II. Definitions

A. The term ''Service'' means the asset allocation service provided by SPIAS to Plans which is accessed through computer software and other written communications in order to provide personalized recommendations to Plan participants regarding the allocation of their investments among the options offered under their Plan.

B. The term ''Service Provider'' means an entity that has been in the financial services business for at least three years, and during such period, has not been convicted of a felony offense involving abuse or misuse of such entity's employee benefit plan position or employment, or any felony arising out of the conduct of the business of a broker, dealer, investment adviser, bank, insurance company or fiduciary. Such entity is also described in one of the following categories:

1. A bank, savings and loan association, insurance company or registered investment adviser which meets the definition of a ''qualified professional asset manager'' (QPAM) set forth in section V(a) of Prohibited Transaction Exemption 84–14 (49 FR 9494 (Mar. 13, 1984), as corrected at 50 FR 41430 (Oct. 10, 1985)) and in addition, has, as of the last day of its most recent fiscal year, total client assets under management and control in an amount not less than $250 million; or

2. A broker dealer registered under the Securities Exchange Act of 1934, which has, as of the last day of its most recent fiscal year, $1 million in shareholders' or partners' equity, and total client assets under management and control in an amount not less than $250 million.

C. The term ''Independent Fiduciary'' means a Plan fiduciary which is independent of SPIAS and its affiliates and independent of the Service Provider and its affiliates.

D. The term ''affiliate'' means:

(1) Any person directly or indirectly through one or more intermediaries, controlling, controlled by, or under common control with the person;

(2) Any officer, director, relative of, or partner in any such person; and

(3) Any corporation or partnership, of which such person is an officer, director or partner.

E. The term ''control'' means the power to exercise a controlling influence over the management or policies of a person other than an individual.

F. The term ''Plan'' means an employee pension benefit plan as defined in section 3(2) of the Act.

Effective Date: This exemption is effective for transactions occurring on or after March 22, 2000.

For a more complete statement of the facts and representations supporting the Department's decision to grant this exemption, refer to the notice of proposed exemption published at 65 FR 15360 (March 22, 2000.)

Written Comments

The Department received four comments from interested persons regarding the notice of proposed exemption (the Notice).

One commentator urged the Department to clarify that the relief provided by the exemption and the conditions of the exemption granted herein applies only to SPIAS's asset allocation services, and that the issuance of the exemption does not constitute an endorsement of the SPIAS program. The Department concurs with the commentator and directs the commentator to the Department's exemption procedures set forth in 29 CFR Part 2570, (55 FR 32836, August 10, 1990). Specifically, sections 2570.49 (b) and (c) state that an exemption is effective only under the conditions set forth in the exemption and only the specific parties to whom an exemption grants relief may rely on the exemption. The Department also notes that the exemption process provides relief from the prohibited transaction provisions of the Act, but not from the Act's general fiduciary responsibility provisions. Thus, the granting of this exemption should not be interpreted as an endorsement by the Department of the investment program described therein.

The commentator also asked the Department to clarify that the standards and conditions of the exemption are not intended to be exclusive standards to be applied in all future exemptions relating to participant investment advisory programs. A second commentator expressed concern that the conditions set forth in this exemption are too restrictive allowing only a narrow range of financial institutions, service providers and plans to provide investment advisory services to Plan participants. This commentator requested that the Department issue a

class exemption which would provide relief for a broad range of investment advisory programs. The Department recognizes that there are many participant investment advisory programs and that these programs are structured in a variety of different ways. Some of these programs may not require exemptions from the self-dealing and conflict of interest provisions contained in the Act.[3] The Department wishes to emphasize that, the granting of this exemption does not foreclose future consideration of a class exemption, or other individual exemptions that may be issued for participant investment advisory programs that would be subject to protective conditions that may differ from those set forth in this exemption.

One of the commentators requested that the Department modify the description of the covered transaction to limit relief to the receipt of fees. Accordingly, the commentator suggested changing the final exemption to read as follows: ''The restrictions of section 406(b)of the Act and the sanctions resulting from the application of section 4975 of the Code by reason of section 4975(c)(1)(E) and (F) of the Code, shall not apply to the receipt of fees by SPIAS as a result of the provision of advice in connection with Plan investments under the Program.'' The Department has determined not to modify the final exemption as requested by the commentator.

A commentator expressed concern that the record-keeping requirements of the exemption set forth in section I(P) might permit S&P to refuse to make available necessary information to Plan fiduciaries on the basis that such information would disclose trade secrets or commercial or financial information which is privileged or confidential. The commentator suggests that the exemption require that the Plan fiduciary be provided with otherwise protected information to the extent that it is necessary or appropriate for the fiduciary to fully understand the methodology underlying the Service. To the extent that SPIAS is unwilling to disclose information or materials that the Independent Fiduciary believes is necessary to fulfill its duty to prudently select and/or monitor SPIAS, that fiduciary is under no obligation to select or otherwise retain SPIAS to provide asset allocation services. The Department does not believe that the information required by a Plan fiduciary to perform its responsibilities to the Plan will necessarily involve trade secrets or commercial or financial information which is privileged or confidential. Accordingly, the Department has determined not modify the exemption as requested.

The fourth comment was from S&P (the Applicant).

1. Effective Date. S&P requested that the effective date of the exemption be made retroactive to the date of publication of the proposed exemption in the **Federal Register**. The Department concurs and has made the final exemption effective as of March 22, 2000.

2. Successors and Affiliates of SPIAS. The Applicant urged the Department to expand the exemption to include future successors to, and affiliates of, SPIAS to account for the possibility of corporate reorganization. The Department believes that it is inappropriate to extend relief to parties who are currently unidentified or not ascertainable. However, the Department notes that if SPIAS is the subject of a corporate reorganization, SPIAS may, if necessary, apply for an amendment to this exemption.

3. Section 408(b)(2) of ERISA. On page 15363 of the Notice, footnote 2 stated:

> The provision of investment advisory services to plans would be exempt from the prohibitions of section 406(a) of ERISA if the conditions of section 408(b)(2) are met. Section 2550.408b–2(a) of the Department's regulations provides that section 408(b)(2) of the Act exempts from the prohibitions of section 406(a), payment by a plan to a party in interest, including a fiduciary for * * * any service (or combination of services) if (1) such * * * service is necessary for the establishment or operation of the plan; (2) such * * * service is furnished under a contract or arrangement which is reasonable; and (3) no more than reasonable compensation is paid for such * * * service. The regulation also provides that section 408(b)(2) does not contain an exemption from acts described in section 406(b) even if such act occurs in connection with a provision of services that is exempt under section 408(b)(2). Section 2550.408b–2(e)(1) further provides that a fiduciary does not engage in an act described in section 406(b)(1) of the Act if the fiduciary does not use any of the authority, control or responsibility which makes such person a fiduciary to cause the plan to pay additional fees for a service furnished by such fiduciary or to pay a fee for a service furnished by a person in which the fiduciary has an interest which may affect the exercise of such fiduciary's best judgement as a fiduciary. In general, whether a violation of section 406(b) occurs during the operation of an investment advisory program is an inherently factual matter. *See* Advisory Opinion 84–04 (January 4, 1984).

The Applicant asked the Department to make a finding that, based on the facts and representations in the Notice, the conditions of section 408(b)(2) are satisfied with respect to those situations in which fees for the Service are paid by the Plan sponsor or the Plan. The Department notes that whether the conditions of section 408(b)(2) of ERISA have been met in each case is inherently factual in nature. Therefore the appropriate plan fiduciaries must determine, based upon all of the relevant facts and circumstances surrounding each investment advisory program, whether the conditions of section 408(b)(2) are satisfied.

4. Periodic Reporting. Section I(B)(6) of the Notice stated in part, that SPIAS shall provide the Independent Fiduciary of each Plan with ''An annual report of Plan activity which summarizes the performance of the Service and asset allocation recommendations and provides a breakdown of all fees and expenses paid by the Plan and participants for the year.'' The Applicant requested clarification that the summary of the performance of the Service relates to the performance of the asset allocation categories provided to the Plan, and suggested the following language: ''An annual report which summarizes the performance of asset allocation categories provided to the Plan (not including the performance of individual participant accounts) and provides a breakdown of all fees and expenses paid to SPIAS by the Plan or participants for the Service for the year. Such reports shall be provided no more than 45 days after the period to which it relates. Upon the Independent Fiduciary's or the Plan sponsor's request, such report may be provided more frequently.'' The Department concurs with the Applicant and has clarified the condition accordingly.

In addition, the Applicant requested that the Department clarify that this condition refers to the fees paid to SPIAS by the Plan and the Plan sponsor. In response to the comment, the Department has determined to clarify this condition under the final exemption. Accordingly, for purposes of I(B)(6), the annual report must disclose a breakdown of all fees and expenses paid to SPIAS in connection with the provision of the Service to participants under the Plan. The Department believes that disclosure of all fees recovered by SPIAS from all sources in connection with the provision of the Service to a particular Plan, will assist the Independent Fiduciary evaluate the reasonableness of the arrangement.

5. Dealings Between a Service Provider and Plans. Section I(J) stated

[3] The Department notes that section 408(b)(2) of the Act exempts from the prohibitions of section 406(a) of the Act any reasonable arrangement for the provision of necessary service to a plan. However, that statutory exemption does not provide relief from the prohibitions described in section 406(b) of the Act. See 29 CFR 2550.408b–2(a).

that ''All dealings between the Service Provider and the Plans participating in the Service are on a basis no less favorable to the Plans than dealings with other investors of the Service Provider.'' The Applicant represents that Plans are clients of a Service Provider and not necessarily investors of the Service Provider, except to the extent that Plans are shareholders of a mutual fund advised or administered by an affiliate of a Service Provider. SPIAS has no control over any Service Provider's dealings with any Plan. The Applicant requests that I(J) be deleted. The Department is not persuaded by the argument submitted in favor of deletion of this condition. The Department believes that this condition is necessary to assure that plans that contract with SPIAS pay no more for investment products than other clients of a Service Provider who do not participate in the Service. The Department notes, however, that this condition does not preclude Service Providers from charging fees related to a Plan's participation in the Service provided that the amount of the fees and the services to which the fees relate have been previously disclosed to, and approved by the Plan. Thus, in response to the comment, the Department has modified I(J) as follows: ''Each Service Provider shall represent to SPIAS that it will not impose any additional fees and/or charges (relating to the investment products made available to Plans) on Plans who contract for the Service unless such fees and charges are imposed on a Service Providers's similarly situated clients who do not contract for the Service.''

6. Records. Section I(O) provides in part, that SPIAS ''will maintain for a period of six years, the records necessary to enable persons described in paragraph (P) of this section to determine whether the conditions of the exemption are met, including records of the recommendations made to the Plan participants and beneficiaries and their investment choices * * *'' The Applicant urges the Department to delete the requirement regarding maintenance of records relating to participant and beneficiary investment choices because S&P and SPIAS will have no practical way of tracking the actual investment choices of participants or tracking whether a participant actually used the advice. Further, if the Service is not provided through the Internet, there is no electronic record linking the advice to investment actions of the participant. The Department concurs with the comment and has deleted the requirement to retain records of participant investment choices.

7. Definition of Service Provider. Section II(B) defines the term ''Service Provider'' as

> ''an entity that has been in the financial services business for at least three years, and during such period, has not been found liable or guilty by a court of law, or has not been a party to a settlement agreement with the IRS or the Department related to any matter concerning an employee benefit plan, and which is described in one of the following categories:
>
> 1. A bank, savings and loan association, insurance company or registered investment adviser which meets the definition of a ''qualified professional asset manager (QPAM) set forth in section V(a) of Prohibited Transaction Exemption 84–14 (49 Fed. Reg. 9494 (Mar. 13, 1984), as corrected at 50 Fed. Reg. 41430 (Oct. 10, 1985) and in addition, has, as of the last day of its most recent fiscal year, total client assets under management and control in an amount not less than $250 million; or
>
> 2. A broker dealer registered under the Securities Exchange Act of 1934, which has, as of the last day of its most recent fiscal year, $1 million in shareholders' or partners' equity, and total client assets under management and control in an amount not less than $250 million.

In its application, the Applicant requested that the definition of Service Provider include third-party record-keeping firms. The Applicant requested that the Department reconsider its decision not to include third-party record-keeping firms in the definition of ''Service Provider.'' The Applicant asserted that the criteria outlined in its application and subsequent submission provided adequate safeguards to limit coverage of the exemption to a small number of very substantial and reputable organizations. The Department is unable to conclude that the limitations suggested by the Applicant provide suitable protections to employee benefit plans participating in the Service Accordingly, the Department has not included third-party record-keeping firms in the definition of ''Service Provider.''

In addition, the Applicant urged the Department to modify section II(B) with respect to the requirement that a Service Provider not have been a party to a settlement agreement with the Department or the IRS related to any matter concerning an employee benefit plan. The Applicant was concerned that this language would exclude many Service Providers which have utilized various voluntary settlement programs at the Department or the IRS. The Department concurs and has modified the definition to read as follows: ''The term 'Service Provider' means an entity that has been in the financial services business for at least three years, and during such period, has not been convicted of a felony offense involving abuse or misuse of such entity's employee benefit plan position or employment, or any felony arising out of the conduct of the business of a broker, dealer, investment adviser, bank, insurance company or fiduciary.

8. Definition of Plan. At the request of the Applicant, the Department has added section II(F) to the final exemption which defines the term ''plan'' to mean ''an employee pension benefit plan described in section 3(2) of the Act.''

9. Definition of Affiliate. Section II(D) defines the term ''affiliate'' to include:

> (1) Any person directly or indirectly through one or more intermediaries, controlling, controlled by, or under common control with the person;
>
> (2) Any officer, director, employee, relative, or partner in any such person and
>
> (3) Any corporation or partnership of which such person is an officer, director partner or employee.

The Applicant requested that the Department clarify that it did not intend the definition to encompass stock ownership of public companies by employees regardless of how de minimis or indirect. Accordingly, the Applicant suggested that the Department delete employees. The Department has modified the definition of affiliate to delete ''employees.''

10. Miscellaneous. (a) Page 15364 of the Notice, Representation No. 7 described how plan participants could access the Service and the form of the risk tolerance questionnaire. The Applicant noted that S&P expects that, depending on a client's particular situation, the risk tolerance questionnaire may change and the number of asset allocation investment recommendations will vary. Thus, the Applicant requested the following changes be made to the Summary of Facts and Representations of the Notice:

> (i) The third sentence of the second paragraph of paragraph No. 7 stated that ''A Plan participant will answer a questionnaire which consists of ten to fifteen questions with three or four multiple choice answers per question.'' The Applicant would like the phrase, ''in its current form'' added following the words, ''questionnaire which'';
>
> (ii) In paragraph No. 7, The third sentence of the fourth paragraph stated ''Based on the score, the Plan participant is categorized into one of six investment recommendations.'' The Applicant asked that the phrase ''or more'' be added after the word ''six'';
>
> (iii) Footnote 3 read, ''Each participant who completes the risk-tolerance questionnaire will be categorized, based on his/her score, into one of these six recommendations as discussed in paragraph

no. 7.'' The Applicant requested that the word ''six'' be deleted.

(iv) In the first sentence of the fifth paragraph of Paragraph no. 7, it is stated that ''The advice provided to a Plan participant through the Service may only be implemented if it is expressly authorized in writing by the Plan participant.'' The applicant asked that the words ''in writing'' be removed because the Service may not be provided in the paper-based form, but rather by telephone or over the by Internet.

The Department has made the above described revisions.

(b) Lastly, The Applicant would like to note that S&P and SPIAS may be required to make payments to Service Providers for costs incurred in connection with the establishment, implementation and maintenance of the Service.

FOR FURTHER INFORMATION CONTACT: Allison Padams Lavigne, U.S. Department of Labor, (202) 219–8971. (This is not a toll free number.)

Washington County Hospital Association Employees' Cash Balance Plan (the Plan)

Located in Hagerstown, Maryland

[Prohibited Transaction Exemption 2000–40; Exemption Application No. D–10839]

Exemption

The restrictions of sections 406(a), 406(b)(1) and (b)(2) of the Act and the sanctions resulting from the application of section 4975 of the Code, by reason of section 4975(c)(1)(A) through (E) of the Code, shall not apply to the past contribution by Washington County Hospital Association to the Plan of certain publicly-traded securities (the Securities), provided: (a) The contribution was a one-time transaction; (b) the Securities were valued at their fair market value as of the date of the contribution, as determined by an independent broker; (c) no commissions were paid in connection with the transaction; and (d) the Securities represented less than 5% of the assets of the Plan at the time of the contribution.

For a more complete statement of the facts and representations supporting the Department's decision to grant this exemption refer to the notice of proposed exemption published on June 13, 2000 at 65 FR 37182.

Effetive Date: This exemption is effective June 18, 1998.

FOR FURTHER INFORMATION CONTACT: Gary H. Lefkowitz of the Department, telephone (202) 219–8881. (This is not a toll-free number.)

General Information

The attention of interested persons is directed to the following:

(1) The fact that a transaction is the subject of an exemption under section 408(a) of the Act and/or section 4975(c)(2) of the Code does not relieve a fiduciary or other party in interest or disqualified person from certain other provisions to which the exemptions does not apply and the general fiduciary responsibility provisions of section 404 of the Act, which among other things require a fiduciary to discharge his duties respecting the plan solely in the interest of the participants and beneficiaries of the plan and in a prudent fashion in accordance with section 404(a)(1)(B) of the Act; nor does it affect the requirement of section 401(a) of the Code that the plan must operate for the exclusive benefit of the employees of the employer maintaining the plan and their beneficiaries;

(2) These exemptions are supplemental to and not in derogation of, any other provisions of the Act and/or the Code, including statutory or administrative exemptions and transactional rules. Furthermore, the fact that a transaction is subject to an administrative or statutory exemption is not dispositive of whether the transaction is in fact a prohibited transaction; and

(3) The availability of these exemptions is subject to the express condition that the material facts and representations contained in each application accurately describes all material terms of the transaction which is the subject of the exemption.

Signed at Washington, DC, this 4th day of August, 2000.

Ivan Strasfeld,

Director of Exemption Determinations, Pension and Welfare Benefits Administration, U.S. Department of Labor.

[FR Doc. 00–20208 Filed 8–9–00; 8:45 am]

BILLING CODE 4510–29–P

NUCLEAR REGULATORY COMMISSION

Agency Information Collection Activities: Submission for the Office of Management and Budget (OMB) Review; Comment Request

AGENCY: Nuclear Regulatory Commission (NRC).

ACTION: Notice of the OMB review of information collection and solicitation of public comment.

SUMMARY: The NRC has recently submitted to OMB for review the following proposal for the collection of information under the provisions of the Paperwork Reduction Act of 1995 (44 U.S.C. Chapter 35). The NRC hereby informs potential respondents that an agency may not conduct or sponsor, and that a person is not required to respond to, a collection of information unless it displays a currently valid OMB control number.

1. *Type of submission, new, revision, or extension:* Extension.

2. *The title of the information collection:* Policy Statement on Cooperation with States at Commercial Nuclear Power Plants and Other Production or Utilization Facilities.

3. *The form number if applicable:* N/A.

4. *How often the collection is required:* On occasion—when a State wishes to observe NRC inspections or perform inspections for NRC.

5. *Who will be required or asked to report:* Those States interested in observing or performing inspections.

6. *An estimate of the number of responses:* Maximum of 50, although not all States participate in the program.

7. *The estimated number of annual respondents:* 50.

8. *An estimate of the total number of hours needed annually to complete the requirement or request:* An average of 10 hours per State, or 500 hours if all States participated in the program.

9. *An indication of whether section 3507(d), Pub. L. 104–13 applies:* Section 3507(d) does not apply, since the collection is not contained in a proposed rule.

10. *Abstract:* States wishing to enter into an agreement with NRC to observe or participate in NRC inspections at nuclear power facilities are requested to provide certain information to the NRC to ensure close cooperation and consistency with the NRC inspection program as specified by the Commission's Policy of Cooperation with States at Commercial Nuclear Power Plants and Other Nuclear Production or Utilization Facilities.

A copy of the final supporting statement may be viewed free of charge at the NRC Public Document Room, 2120 L Street, NW. (lower level), Washington, DC. OMB clearance requests are available at the NRC worldwide web site (http://www.nrc.gov/NRC/PUBLIC/OMB/index.html). The document will be available on the NRC home page site for 60 days after the signature date of this notice.

Comments and questions should be directed to the OMB reviewer listed below by September 11, 2000. Comments received after this date will

be considered if it is practical to do so, but assurance of consideration cannot be given to comments received after this date. Erik Godwin, Office of Information and Regulatory Affairs (3150–0163), NEOB–10202, Office of Management and Budget, Washington, DC 20503

Comments can also be submitted by telephone at (202) 395–3087.

The NRC Clearance Officer is Brenda Jo. Shelton, 301–415–7233.

Dated at Rockville, Maryland, this 4th day of August 2000.

For the Nuclear Regulatory Commission,

Beth C. St. Mary,

Acting NRC Clearance Officer, Office of the Chief Information Officer.

[FR Doc. 00–20333 Filed 8–9–00; 8:45 am]

BILLING CODE 7590–01–P

NUCLEAR REGULATORY COMMISSION

[Docket No. 72–22]

Public Meeting; Additional Public Comments on NUREG–1714: ''Draft Environmental Impact Statement Construction and Operation of an Independent Spent Fuel Storage Installation on the Reservation of the Skull Valley Band of Goshute Indians and Associated Transportation Facility in Tooele County, UT''

LEAD AGENCY: Nuclear Regulatory Commission.

COOPERATING AGENCIES: Department of Interior, Bureau of Indian Affairs and Bureau of Land Management and Surface Transportation Board.

ACTION: Notice of public meeting.

SUMMARY: A supplemental public meeting will be held on August 21, 2000, at the Little America Hotel in Salt Lake City, UT to hear public comments on the Draft Environmental Impact Statement (DEIS) regarding the proposal of Private Fuel Storage, L.L.C. (PFS), to construct, operate, and decommission an independent spent fuel storage installation (ISFSI) on the Reservation of the Skull Valley Band of Goshute Indians. Two previous meetings were held on July 27, 2000 and July 28, 2000, in Salt Lake City, UT and Grantsville, UT, respectively. This August 21, 2000, meeting is a follow-up to the July meetings. The July meetings were noticed in the **Federal Register** on June 23, 2000 (Volume 65, No. 122, pages 39206–39208).

The PFS proposal requires approval from four federal agencies: NRC, Department of Interior's Bureau of Indian Affairs (BIA) and Bureau of Land Management (BLM), and the Surface Transportation Board (STB).

DATES: August 21, 2000.

The NRC staff will hold a public meeting to accept public comments. The public meeting will be held in two sessions on August 21, 2000, from 2 p.m. to 4 p.m. and from 6 p.m. to 9 p.m. in Ballroom A of the Little America Inn, 500 South Main Street, Salt Lake City, Utah 84101. This meeting will be transcribed and will include (1) a presentation of the contents of the DEIS and the Safety Evaluation Report, and (2) the opportunity for interested Government agencies, organizations, and individuals to provide comments on the DEIS. Persons may pre-register to attend or present oral comments at the public meeting on the DEIS by contacting Scott C. Flanders, Sr. Environmental Project Manager, Licensing and Inspection Directorate, Spent Fuel Project Office, Office of Nuclear Material Safety and Safeguards, Nuclear Regulatory Commission, Washington, DC 20555 or via Telephone at (301) 415–1172 or via email at *SCF@nrc.gov.* Information concerning this DEIS may also be obtained from Mr. Flanders. Members of the public may also register within 15 minutes of the start of each meeting to provide oral comments. Individual oral comments may be limited by the time available and depending on the number of persons who register.

FOR FURTHER INFORMATION CONTACT: Scott C. Flanders, Sr. Environmental Project Manager, Licensing and Inspection Directorate, Spent Fuel Project Office, Office of Nuclear Material Safety and Safeguards, Nuclear Regulatory Commission, Washington, DC 20555. Telephone (301) 415–1172. Internet address: SCF@nrc.gov.

SUPPLEMENTARY INFORMATION: Participation in the public process does not entitle participants to become parties to the adjudicatory proceeding associated with the proposed NRC licensing action. Participation in the adjudicatory proceeding is governed by the procedures specified in 10 CFR 2.714 and 2.715 and in the aforementioned **Federal Register** notice (62 FR 41099).

Dated at Rockville, Maryland, this 4th day of August 2000.

For the Nuclear Regulatory Commission.

Susan F. Shankman,

Deputy Director, Licensing and Inspection Directorate, Spent Fuel Project Office, Office of Nuclear Material Safety and Safeguards.

[FR Doc. 00–20334 Filed 8–9–00; 8:45 am]

BILLING CODE 7590–01–P

NUCLEAR REGULATORY COMMISSION

Public Workshop To Discuss Current Issues Associated With the Decommissioning of Nuclear Facilities

AGENCY: Nuclear Regulatory Commission (NRC).

ACTION: Notice of a public workshop to discuss current issues associated with the decommissioning of nuclear facilities.

SUMMARY: This notice announces a Public Workshop to discuss current issues associated with the decommissioning of nuclear facilities. The goal of the workshop will be to provide a forum for NRC staff to discuss, with nuclear industry and other interested stakeholders, NRC's process, and guidance, for developing and evaluating decommissioning plans (DPs) and license termination plans (LTPs), current issues associated with the decommissioning of nuclear facilities and to identify areas and strategies for improving the decommissioning process.

SUPPLEMENTAL INFORMATION: On July 21, 1997, the U.S. Nuclear Regulatory Commission (NRC) published the final rule on Radiological Criteria for License Termination (the License Termination Rule or LTR) as Subpart E to 10 CFR Part 20. NRC regulations require that materials licensees submit DPs to support the decommissioning of its facility if it is required by license condition, or if the procedures and activities necessary to carry out the decommissioning have not been approved by NRC and these procedures could increase the potential health and safety impacts to the workers or the public. NRC regulations also require that reactor licensees submit Post-shutdown Decommissioning Activities Reports and LTPs to support the decommissioning of nuclear power facilities.

Since the promulgation of the LTR, NRC staff has been developing guidance to assist both regulators and the regulated community in complying with the LTR. To facilitate early and continuing input from the regulated community and other stakeholders on this guidance, NRC held several workshops in 1998, 1999, and in 2000 on various technical issues associated with the decommissioning of nuclear facilities. As part of our continuing efforts to involve the regulated community and other stakeholders in our decommissioning program, we will hold a workshop November 8–9, 2000, at the Commission's Headquarters

building in Rockville, Maryland to discuss our current process for reviewing information supporting the decommissioning of nuclear facilities and to obtain perspectives from interested stakeholders on the manner in which we are implementing the LTR.

The workshop will be held at the NRC Headquarters, in the Auditorium of Two White Flint North Building at 11545 Rockville Pike, Rockville, Maryland. This workshop will be open to the public and registration will be held from 7:45 to 8:30 a.m. on the first day of the workshop, November 8, 2000, at the entrance of the Auditorium. There will not be pre-registration. The workshop will run from 8:30 a.m to 4:45 p.m. on both days. Each day will feature presentations from NRC headquarters and regional staff and roundtable discussion on current issues in decommissioning. In addition, we plan to have the workshop transcribed, and the transcripts, and any material presented at the workshop, will be posted on the NRC's Website.

NRC strongly encourages all interested stakeholders to attend and participate in this workshop, as it will offer a unique opportunity to provide the NRC staff and the nuclear power industry with insights, perspectives, and information that stakeholders feel is important for the NRC staff to consider as it seeks ways to improve our decommissioning program.

FOR FURTHER INFORMATION CONTACT: Dominick A. Orlando, Decommissioning Branch, Division of Waste Management, Office of Nuclear Material Safety and Safeguards, at (301) 415–6749.

Dated at Rockville, Maryland this 3rd day of August, 2000.

For the Nuclear Regulatory Commission.

Larry W. Camper,

Chief, Decommissioning Branch, Division of Waste Management, Office of Nuclear Material Safety and Safeguards.

[FR Doc. 00–20335 Filed 8–9–00; 8:45 am]

BILLING CODE 7590–01–P

NUCLEAR REGULATORY COMMISSION

Sunshine Act Meetings

AGENCY HOLDING THE MEETING: Nuclear Regulatory Commission.

DATE: Weeks of August 7, 14, 21, 28, September 4, and 11, 2000.

PLACE: Commissioners' Conference Room, 11555 Rockville Pike, Rockville, Maryland.

STATUS: Public and Closed.

MATTERS TO BE CONSIDERED:

Week of August 7

There are no meetings scheduled for the Week of August 7.

Week of August 14—Tentative

Tuesday, August 15

9:25 a.m.
Affirmation Session (Public Meeting) (If necessary)

9:30 a.m.
Briefing on NRC International Activities (Public Meeting) (Contact: Ron Hauber, 301–415–2344)

This meeting will be webcast live at the Web address—www.nrc.gov/live.html

Week of August 21—Tentative

Monday, August 21

1:55 p.m.
Affirmation Session (Public Meeting) (If necessary)

Week of August 28—Tentative

There are no meetings scheduled for the Week of August 28.

Week of September 4—Tentative

There are no meetings scheduled for the Week of September 4.

Week of September 11—Tentative

There are no meetings scheduled for the Week of September 11.

The Schedule for Commission meetings is subject to change on short notice. To verify the status of meetings call (Recording)—(301) 415–1292.

CONTACT PERSON FOR MORE INFORMATION: Bill Hill (301) 415–1661.

* * * * *

ADDITIONAL INFORMATION: By a vote of 5–0 on August 1, the Commission determined pursuant to U.S.C 552b(e) and § 9.107(a) of the Commission's rules that ''Affirmation of (a) Private Fuel Storage, L.L.C., Docket No. 72–22 Referred Ruling of LBP–00–06 and (b) NORTHERN STATES POWER COMPANY (Monticello Nuclear Generating Plant; Prairie Island Nuclear Generating Plant, Units 1 and 2; and Prairie Island Independent Spent Fuel Storage Installation); Docket Nos. 50–263–LT, 50–282–LT, 50–306–LT, and 70–10–LT; Petitions to Intervene'' be held on August 1, and on less than one week's notice to the public.

* * * * *

The NRC Commission Meeting Schedule can be found on the Internet at: http://www.nrc.gov/SECY/smj/schedule.htm

* * * * *

This notice is distributed by mail to several hundred subscribers; if you no longer wish to receive it, or would like to be added to it, please contact the Office of the Secretary, Attn: Operations Branch, Washington, D.C. 20555 (301–415–1661). In addition, distribution of this meeting notice over the Internet system is available. If you are interested in receiving this Commission meeting schedule electronically, please send an electronic message to wmh@nrc.gov or dkw@nrc.gov.

Dated: August 6, 2000.

William M. Hill, Jr.,

SECY Tracking Officer, Office of the Secretary.

[FR Doc. 00–20406 Filed 8–8–00; 1:23 pm]

BILLING CODE 7590–01–M

SECURITIES AND EXCHANGE COMMISSION

[Release No. 35–27208]

Filings Under the Public Utility Holding Company Act of 1935, As Amended (''Act'')

August 4, 2000.

Notice is hereby given that the following filing(s) has/have been made with the Commission pursuant to provisions of the Act and rules promulgated under the Act. All interested persons are referred to the application(s) and/or declaration(s) for complete statements of the proposed transaction(s) summarized below. The application(s) and/or declaration(s) and any amendment(s) is/are available for public inspection through the Commission's Branch of Public Reference.

Interested persons wishing to comment or request a hearing on the application(s) and/or declaration(s) should submit their views in writing by August 29, 2000, to the Secretary, Securities and Exchange Commission, Washington, DC 20549–0609, and serve a copy on the relevant applicant(s) and/or declarant(s) at the address(es) specified below. Proof of service (by affidavit or, in the case of an attorney at law, by certificate) should be filed with the request. Any request for hearing should identify specifically the issues of facts or law that are disputed. A person who so requests will be notified of any hearing, if ordered, and will receive a copy of any notice or order issued in the matter. After August 29, 2000, the application(s) and/or declaration(s), as filed or as amended, may be granted and/or permitted to become effective.

CP&L Energy, Inc., et al. (70–9643)

CP&L Energy, Inc. (''CP&L Energy''), a public utility holding company claiming an exemption under section 3(a)(1) of

the Act, located at 411 Fayetteville Street Mall, Raleigh, North Carolina 27601, and Florida Progress Corporation (''Florida Progress''), a Florida public utility holding company claiming exemption under section 3(a)(1) of the Act, located at One Progress Plaza, St. Petersburg, Florida 33701 (together with CP&L Energy, ''Applicants''), have filed an application-declaration under sections 6(a), 7, 9(a)(2), 10, and 13(b) of the Act and rules 80–91 under the Act.

Applicants request authority for CP&L Energy to directly acquire all of the issued and outstanding shares of Florida Progress (''Merger''). Following the consummation of the Merger, CP&L Energy will register as a holding company under section 5 of the Act.

Description of the Parties

CP&L Energy has two utility subsidiaries, Carolina Power & Light Company (''CP&L'') [1] and North Carolina Natural Gas Corporation (''NCNG''). CP&L is primarily engaged in the business of generating, purchasing, transmitting and distributing electricity to approximately 1.2 million customers located within two noncontiguous services areas of North Carolina, separated by Duke Power Company's transmission system. CP&L's eastern service area (''Eastern Service Area'') covers approximately 30,000 square miles, in eastern North Carolina, including the cities of Raleigh and Wilmington, North Carolina, and in northern South Carolina. CP&L also serves customers in western North Carolina in and around the City of Asheville (''Western Service Area'').

As of December 31, 1999, CP&L owned or controlled 10,128 MW of installed generating capacity, 5,585 pole miles of transmission lines, over 44,294 pole miles of overhead distribution lines, and nearly 13,842 miles of underground distribution lines. CP&L is subject to regulation by the North Carolina Utilities Commission (''NCUC'') and the South Carolina Public Service Commission regarding retail electric rates, securities issuances, affiliate transactions, and other matters, and by the Federal Energy Regulatory Commission with respect to wholesale electric and electric transmission rates.

NCNG, a gas public utility company, transports and distributes natural gas and propane to approximately 178,000 customers in North Carolina. NCNG's natural gas system consists of approximately 1,128 miles of transmission pipeline and 2,865 miles of distribution mains. NCNG is subject to regulation by the NCUC regarding rates, securities issuances, affiliate transactions, and other matters and by the Federal Energy Regulatory Commission (''FERC'') with respect to wholesale electric and electric transmission rates and other matters.

Applicants state that CP&L Energy has several subsidiaries that are engaged in the following businesses: designing, installing and providing energy and facilities management software systems and related services; providing environmental and energy management services; owning and operating an ''eligible facility,'' as defined by section 32 of the Act; selling Internet-based services and operating fiber optic telecommunications facilities; holding certain land and water rights used in CP&L's utility operations; owning and operating an interest in an existing intrastate natural gas pipeline company; developing, owning, and operating a new intrastate gas pipeline and gas distribution system that will, upon completion, become a ''gas utility company''; [2] owning and operating an interest in a liquefied natural gas project; owning and operating an interest in facilities that produce synthetic fuels from coal fines and other coal byproducts; and energy marketing and brokering.[3] Applicants state that certain of these subsidiaries also own passive investments in venture capital funds, local economic development enterprises, and in tax-advantaged low income housing and historic building restoration projects. In addition, Applicants stat that CP&L Energy has interests in businesses, which do not qualify as subsidiaries, that are engaged in natural gas pipeline and liquefied gas activities in North Carolina.[4]

For the year that ended December 31, 1999, CP&L reported $3.5 billion in consolidated operating revenues, of which $3.14 billion was derived from electric utility operations, $201 million from regulated natural gas operations, and $125 million from diversified non-utility activities. As of December 31, 1999, CP&L had consolidated assets of $9.5 billion, including $6.8 billion in net utility plant.

Florida Progress owns all of the issued and outstanding common stock of Florida Power Corporation (''Florida Power''), an electric utility that serves approximately 1.4 million customers in a 20,000 square mile area of central and northern Florida, including St. Petersburg, Clearwater, and the areas around Orlando. The Florida Power electric system, as of December 31, 2000, has 9,567 MW of total generating capacity and owns 4,687 circuit miles of high voltage transmission lines and 25,4090 circuit miles of distribution lines. In addition, Applicants state that Florida Power, together with other utilities and municipalities own 13 transmission lines interconnecting peninsular Florida with The Southern Company (''Southern Interface'').[5] Florida Power is subject to regulation by the Florida Public Service Commission (''FPSC'') regarding rates, securities issuances, affiliate transactions, and other matters and by the FERC with respect to wholesale electric and electric transmission rates and other matters.

Florida Progress' principal nonutility subsidiary is Electric Fuels Corporation, which has operations organized into three units: energy and related services, inland marine transportation and rail services. The energy and related services unit mines and sells coal to Florida Power and to nonassociates. This unit also produces and sells natural gas and synthetic fuel, and provides marine terminal services and offshore marine transportation. The inland marine transportation business unit, conducted through MEMCO Barge Lines, Inc., transports coal and dry-bulk cargoes primarily along the Mississippi, Illinois and Ohio Rivers, using a fleet of river barges and towboats. The rail services business unit, conducted primarily through Progress Rail Services Corporation, is one of the largest integrated processors and suppliers of railroad materials and services in the country. With operations in 24 states, Mexico and Canada, Progress Rail offers a full range of railcar parts, maintenance-of-way equipment, rail and other track material, railcar repair facilities, railcar scrapping and metal recycling, as well as railcar sales and leasing.

Applicants state that Florida Progress also has subsidiaries engaged in marketing telecommunications capacity and other telecommunications services, developing independent and cogeneration power projects, power marketing, holding real estate and accounts receivable to support the operations of associates, and selling life

[1] CP&L claims exemption from registration under section 3(a)(2) of the Act.

[2] Applicants state that this gas distribution system will be the subject of a separate application.

[3] Applicants also state that CP&L derives *de miminis* revenues from various activities such as fleet vehicle repair and servicing, transformer maintenance services, data processing and the sale of timber.

[4] The names of these subsidiaries, funds, enterprises, projects and other businesses are listed in Exhibit A to this notice.

[5] Applicants state that Florida Power is currently allocated 438 MW of the total import capacity over the Southern Interface, and 231 MW and 304 MW of the Southern Interface's summer and winter export capacity, respectively.

insurance.[6] In addition, Florida Progress directly or indirectly owns passive investments in affordable housing projects and in a local baseball team. Applicants also state that Florida Power derives *de minimis* revenues, from constructing transmission and distribution facilities and providing outage maintenance services to nonassociate utilities and from constructing relay towers for mobile phones.[7]

For the year that ended December 31, 1999, Florida Progress reported consolidated operating revenues of $3.85 billion, of which nearly $2.63 billion were derived from electric utility operations and $1.21 billion were derived from non-utility activities. As of December 31, 1999, Florida Progress had total assets of $6.5 billion, including net utility plant of $3.7 billion.

Proposed Merger and Operations

Under an Amended and Restated Agreement and Plan of Exchange, dated August 22, 1999, as amended March 3, 2000 (as amended, ''Exchange Agreement''), Florida Progress shareholders will sell each share of their common stock to CP&L Energy in exchange for one contingent value obligation (''CVO'')[8] and, at their election, either $54.00 in cash or a number of shares of CP&L Energy common stock equal to the exchange ratio which is designed to provide Florida Progress shareholders with CP&L Energy common stock having a market value of $54.00, subject to certain limitations (''Share Exchange'').[9] Florida Progress has not issued any preferred stock or debt securities. The boards of directors of CP&L Energy and Florida Progress approved the Share Exchange on February 25, and March 3, 2000, respectively.

Applicants state that the electric utility properties will be operated as a single integrated system. CP&L Energy intends to physically interconnect the electric utility systems via a unidirectional, south-to-north, 50 MW firm transmission path (''Contract Path'') over Southern Company and Duke Power transmission systems.[10] The Contract Path, which commences on January 1, 2001, will extend from the interface of the Southern and Florida Power transmission systems to the interface of the Duke Power and CP&L Eastern Service Area transmission systems. The Contract Path has been reserved for an initial one-year period, and Applicants commit to renewing the Contract Path for up to two additional one-year periods, to the extent necessary to satisfy the physical interconnection requirement of section 11 of the Act. Applicants also state that additional non-firm transmission capacity will be available for purchase on neighborhood transmission systems.[11]

Related Authorizations

Applicants request authority to organize CP&L Service as a service company subsidiary of CP&L Energy. Applicants request under rule 88(b) under the Act that the Commission find that the company will be organized and conducted to meet the requirements of section 13(b) of the Act. CP&L Service would provide services, at cost, under two separate service agreements to associate companies, in accordance with rules 90 and 91 under the Act. In addition, CP&L, NCNG, and Florida Power request authority to provide services and sell or lease goods to each other and associate companies in accordance with rules 87, 90, and 91 under the Act.

Applicants also propose to continue and extend two agreements under which Electric Fuels sells coal to Florida Power for use at Florida Power's Crystal River generating station. The price charged by Electric Fuels to Florida Power consists of (a) the costs paid by Electric Power to associate and nonassociate coal suppliers, (b) the cost of transportation to the Crystal River station by rail or water, (c) Electric Fuel's other expenses and (d) a return on Electric Fuels' equity investment associated with assets dedicated to regulated businesses, at the rate of return on equity authorized by the FPSC for Florida Power.

CP&L Energy also proposes to retain Florida Progress for a period of up to eight years as a wholly owned subsidiary, which will continue to own all of the issued and outstanding common stock of Florida Power, and requests that the Commission grant Florida Power an exemption under section 3(a)(1) of the Act. In this connection, Applicants state that both Florida Progress and Florida Power are incorporated in Florida and that all of Florida Power's operations are in Florida. Applicants state that it is desirable to retain Florida Progress as an exempt holding company in order to avoid repayment of debt and preferred securities issued by Florida Progress subsidiaries that are guaranteed by Florida Progress.

For the Commission by the Division of Investment Management, under delegated authority.

Margaret H. McFarland,

Deputy Secretary.

EXHIBIT A: Nonutility Businesses

CP&L Energy

CP&L Energy directly or indirectly owns all of the outstanding equity securities of the following nonutility subsidiaries: Strategic Resource Solutions Corp., Applied Computer Technologies Corp., ACT Controls, Spectrum Controls, Inc., SRS Engineering Corp., Monroe Power Company, CP&L Service Company, LLC CPL Energy Ventures, Inc., CPL Synfuels, LLC, Caronet, Inc., Capitan Corporation, CaroFund, Inc., CaroHome, LLC, CaroFinancial, Inc., Cape Fear Energy Corporation, NCNG Cardinal Pipeline Investment Corporation, NCNG Pine Needle Investment Corporation, and NCNG Energy Corporation. In addition, CP&L Energy also holds a 50% interest in Eastern North Carolina Natural Gas Company, LLC, a 35% interest in Interpath Communications, Inc., a 33⅓ interest in Autonomous Networks, LLC, a 20% interest in CFN FiberNet LLC, a 10% interest in BellSouth Carolinas PCS, LP, a 90% interest in each of Solid Fuel, LLC and Sandy River Synfuel, LLC, and a five percent interest in each of Cardinal Pipeline Company, LLC and Pine Needle LNG Company.

CP&L also directly or indirectly owns a passive interest in the following entities: Absolut Limited Partnership LP, Better Homes for Garner, Capital City Low Income Housing LP, Walnut Street LP, WNC Institutional Tax Credit Fund, LP, Maxey

[6] Applicants state that Florida Progress is pursuing efforts to divest the company, Mid Continent Life Insurance Company, that is engaged in selling life insurance.

[7] A complete list of the names of the businesses in which Florida Progress has an interest in providing in Exhibit A.

[8] Each CVO will represent the assignable and transferable right to receive a pro rata portion of certain contingent payments that are based upon the net after-tax cash flow, including federal income tax credits, to CP&L Energy generated by four synthetic fuels plants that were purchased by Florida Progress in October of 1999.

[9] The exchange ratio will be determined by dividing $54.00 by the average of the closing sale price per share of CP&L Energy common stock as reported on the New York Stock Exchange Composite Tape on each of the twenty consecutive trading days ending with the fifth trading day immediately preceding the closing date (the ''Average Closing Price''). If, however, the Average Closing Price is greater than $45.39, the exchange ratio will be fixed at 1.1897, and if the Average Closing Price is less than $37.13, the exchange ratio will be fixed at 1.4543. The actual value of stock consideration received for each share Florida Progress share will depend on the market value of CP&L Energy common stock at the completion of the Share Exchange. Therefore, if the Average Closing Price is less than $37.13, then each share of Florida Progress common stock exchanged for stock consideration will be valued in the Share Exchange at less than $54.00, and if the Average Closing Price is more than $45.39, then each share of Florida Progress common stock exchanged for stock consideration will be valued in the Share Exchange at more than $54.00.

[10] Applicants predict that, initially, power exchanges between Florida Power and CP&L will be small, infrequent and intermittent.

[11] Applicants state that CP&L Energy proposes to retain NCNG as an additional integrated gas utility system.

Flats, LLC, Powerhouse Square, LLC, Utech Venture Capital Corporation, Utech Climate Challenge Fund LP, Carousel Capital Partners, LP, NC Enterprise Fund, LP, 1–40 Enterprises, LLC, Southeast Regional Park Development Company, LLC, South Atlantic Private Equity Fund IV, LP, Palmetto Seed Capital Challenge Fund LP, Pantellos Corporation, Utility Competitive Advantage Fund, LLC, Affordable Housing Developers, LLC, Anaheim Affordable, LP, ARV Troy Villa, LP, Bradford Place of Fuquay-Varina LP, Siler City, Cedar Tree Properties, LP, Lumberton-Chestnut Place LLC, Dillon Apartments of South Carolina, Enston Home LP, Excelsior Apartments LP, First Partners II, LP, Garden Spring Housing Association, LLC, The Garner School Apartments LP, Wilmington-Hooper School Apts, LLC, Mountainside LLC, Meadow Spring Housing Assoc. LLC, Hartsville Apartments LP, Manor Associates LP, Asheboro-North Forest LLC, Northgate II LLC, Knightdale Development LLC, Parkview Housing Associate LP, Prarie Limited Liability Company, Ridgewood Housing Assc LLC, Arden-River Glen LLC, Rockwook North LLC, Rockwood AH–1 LP, Marion Apartments LP, Spring Forest Housing Assoc, LLC, Bishopville Apartments LP, Trinity Ridge LLC, Havelock-Tyler Place Apartments LLC, West Cary Apartments LLC, Westridge Wood LLC, Wilrik Hotel Apartments LLC, Asheville-Woodridge LP, Knightdale Apts, LLC, Savannah Place Apartments, LLC, Willow Run, LLC, Wind Ridge, LLC, HGA Development, LLC, GAR, LLC, and Raleigh-CaroHome/WCK, LLC.

Florida Progress Corporation

Florida Progress has a number of direct and indirect nonutility subsidiaries: FPC Del, Inc., Energy Solutions, Inc., Progress Capital Holdings, Inc., Florida Progress Funding Corporation, FPC Capital I, FPC Capital II, Mid-Continent Life Insurance Company, PIH, Inc., Progress Reinsurance Company, Ltd., Progress Telecommunications Corporation, Progress-Centrus, Inc., Progress Energy Corporation, PEC Fort Drum, Inc., Westmoreland-Ft. Drum, L.P., Westpower Ft. Drum, Black River Limited Partnership, Progress Desal, Inc., Progress Power Marketing, Inc., Progress Holdings, Inc., Cadence Network, Inc., Progress Provisional Holdings, Inc., Electric Fuels Corporation, Awayland Coal Company, Inc., Dixie Fuels Limited, Dixie Fuels II Limited, EFC Synfuel L.L.C., Homeland Coal Company, Inc., Powell Mountain Joint Venture, Kentucky May Coal Company, Inc., Diamond May Coal Company, Diamond May Mining Company, Cincinnati Bulk Terminals, Inc., Kanawha River Terminals, Inc., Marigold Dock, Inc., Colona Sub No. 2, LLC, Black Hawk Synfuel, Ceredo Synfuel L.L.C., Sandy River Synfuel L.L.C., Solid Energy L.L.C., Solid Fuel L.L.C., LLC, New River Synfuel, LLC, Coal Recovery V, LLC, Colona Newco, LLC, Ceredo Liquid Terminals, Inc., Colona Synfuel Limited Partnership, LLLP, Kentucky May mining Company, Little Black Mountain Coal Reserves, Inc., Dulcimer Land Company, Little Black Mountain Land Company MEMCO Barge Line, Inc., Elmwood Marine Services, Inc., Conlease, Inc., International Marine Terminals Partnership, I.M.T. Land Corp., Mesa Hydrocarbons, Inc., Powell Mountain, Inc., PMCC, Inc., Powell Mountain Coal Company, Inc., Murphy Land Company, Inc., Progress Land Corporation, Progress Materials, Inc., Progress Metal Reclamation Company, West Virginia Auto Shredding, Progress Rail Services Corporation, Chemetron-Railway products, Inc., FM Industries, Inc., Kentuckiana Railcar Repair and Storage Facility, LLC, PRS International Sales Company, Inc., Progress Rail Services de Mexico, S.A. de C.V., Progress Rail Canada Corp., Progress Rail Holdings, Inc., Progress Rail Transcanada Corporation, Progress Vanguard Corp., Railcar, Ltd., Southern Machine and Tool Company, United Industries, Inc., Servicios Ferroviarios Progress, S. de R.L. de C.V., Servicios Administrativos Progress, S. de R.L. de C.V. and Progress Synfuel Holdings, Inc.

In addition, Florida Progress has a passive investment in the following entities: American Tax Credit Corporate Fund III, L.P., Boston Capital Corporate Tax Credit Fund VII, Boston Capital Corporate Tax Credit Fund, VIII, KeyCorp Investment Limited Partnership II, Lehman Housing Tax Credit Fund, L.P. McDonald Corporate Tax Credit Fund 1996 Limited Partnership, and National Corporate Tax Credit Fund VI.

[FR Doc. 00–20255 Filed 8–9–00; 8:45 am]

BILLING CODE 8010–01–M

SECURITIES AND EXCHANGE COMMISSION

[Investment Company Act Release No. 24592; 812–11932]

CIGNA Funds Group and Times Square Capital Management, Inc.; Notice of Application

August 3, 2000.

AGENCY: Securities and Exchange Commission (''Commission'').

ACTION: Notice of an application under section 6(c) of the Investment Company Act of 1940 (the ''Act'') for an exemption from section 15(a) of the Act and rule 18f–2 under the Act.

Summary of the Application: CIGNA Funds Group (the ''Fund'') and Times Square Capital Management, Inc. (''Manager'') request an order to permit them to enter into and materially amend subadvisory agreements without shareholder approval.

Filing Date: The application was filed on January 7, 2000, and amended on August 2, 2000.

Hearing or Notification of Hearing: An order granting the application will be issued unless the Commission orders a hearing. Interested persons may request a hearing by writing to the Commission's Secretary and serving applicants with a copy of the request, personally or by mail. Hearing requests should be received by the Commission by 5:30 p.m. on August 28, 2000, and should be accompanied by proof of service on applicants in the form of an affidavit or, for lawyers, a certificate of service. Hearing requests should state the nature of the writer's interest, the reason for the request, and the issues contested. Persons who wish to be notified of a hearing may request notification by writing to the Commission's Secretary.

ADDRESSES: Secretary, Commission, 450 Fifth Street, NW., Washington, DC 20549–0609. Applicants, c/o Jeffrey S. Winter, Esq., CIGNA Corporation, S–215, 900 Cottage Grove Road, Hartford, CT 06152.

FOR FURTHER INFORMATION CONTACT: Paula L. Kashtan, Senior Counsel, at (202) 942–0615, or Mary Kay Frech, Branch Chief, at (202) 942–0564 (Division of Investment Management, Office of Investment Company Regulation).

SUPPLEMENTARY INFORMATION: The following is a summary of the application. The complete application may be obtained for a fee from the Commission's Public Reference Branch, 450 Fifth Street, NW., Washington, DC 20549–0102 (telephone (202) 942–8090).

Applicants' Representations

1. The Fund, a Massachusetts business trust, is registered under the Act as an open-end management investment company. The Fund currently is comprised of nine series, each with its own investment objectives and policies. The Manager, a Delaware corporation and an indirect wholly-owned subsidiary of CIGNA Corporation, is registered as an investment adviser under the Investment Advisers Act of 1940 (''Advisers Act''). The Manager serves as investment adviser to each series of the Fund, including those series that utilize the Manager/subadviser structure described below (''Portfolios'').[1]

2. The Manager has entered into an investment management agreement (''Management Agreement'') with respect to each of the Portfolios that was approved by the board of trustees of the Fund (the ''Board''), including a majority of the trustees who are not ''interested persons,'' as defined in

[1] Applicants also request relief with respect to future series of the Fund and any other registered open-end management investment companies that: (a) are advised by the Manager or any entity controlling, controlled by, or under common control with the Manager; (b) use the Manager/subadviser structure described in the application; and (c) comply with the terms and conditions in the application (''Future Portfolios''). The Fund is the only existing investment company that currently intends to rely on the order.

section 2(a)(19) of the Act (''Independent Trustees''), and the shareholders of each Portfolio. Under the terms of the Management Agreement, the Manager supervises the general business, administrative, investment advisory and portfolio management operations of the Portfolios. For its services, the Manager receives a management fee at an annual rate based on a percentage of the applicable Portfolio's average net assets.

3. The Manager seeks to achieve the investment objective of the Portfolios by selecting, subject to the oversight and approval of the Board, one or more subadvisers (each a ''Subadviser'' and collectively ''Subadvisers'') to manage the assets of the Portfolios (''Manager/Subadviser Structure''). Under the Manager/Subadviser Structure, the specific investment decisions for the Portfolios are made by one or more Subadvisers, each of which has discretionary authority to invest all or a portion of the assets of a particular Portfolio, subject to the general supervision of the Manager and the Board. The Subadvisers are investment advisers registered under the Advisers Act. Future Subadvisers also will be registered or exempt from registration under the Advisers Act. Each Portfolio that currently uses Subadvisers has a single Subadviser.

4. The Manager selects Subadvisers based on a process that includes reviewing each Subadviser's investment performance record, conformity to investment objectives and policies, organizational structure, management team, compliance and operational capabilities, and assets under management. Subadvisers are recommended to the Board by the Manager and selected and approved by the Board, including a majority of the Independent Trustees. The Manager monitors the Portfolios and the Subadvisers and makes recommendations to the Board regarding the allocation, and reallocation, of assets among Subadvisers and is responsible for recommending the hiring, termination and replacement of Subadvisers. Each Subadviser performs services pursuant to a written agreement with the Manager (the ''Subadvisory Agreement''). Subadvisers' fees are paid by the Manager out of the management fees received by the Manager from the respective Portfolio.

5. Applicants request relief to permit the Manager, subject to the oversight of the Board, to enter into and materially amend Subadvisory agreements without shareholder approval.[2] The requested relief will not extend to a Subadviser that is an affiliated person, as defined in section 2(a)(3) of the Act, of the Fund or the Manager, other than by reason of serving as a Subadviser to one or more of the Portfolios (an ''Affiliated Subadviser'').

Applicants' Legal Analysis

1. Section 15(a) of the Act provides, in relevant part, that it is unlawful for any person to act as an investment adviser to a registered investment company except pursuant to a written contract that has been approved by the vote of the company's outstanding voting securities. Rule 18f–2 under the Act provides that each series or class of stock in a series company affected by a matter must approve such matter if the Act requires shareholder approval.

2. Section 6(c) of the Act provides that the Commission may exempt any person, security, or transaction or any class or classes of persons, securities, or transactions from any provision of the Act, or from any rule thereunder, if such exemption is necessary or appropriate in the public interest and consistent with the protection of investors and the purposes fairly intended by the policy and provisions of the Act. Applicants believe that the requested relief meets this standard for the reasons discussed below.

3. Applicants assert that the investors are relying on the Manager's experience to select one or more Subadvisers best suited to achieve a Portfolio's desired investment objectives. Applicants assert that, from the perspective of the investor, the role of the Subadvisers is comparable to that of individual portfolio managers employed by other investment advisory firms. Applicants contend that requiring shareholder approval of Subadvisory Agreements may impose unnecessary costs and delays on the Portfolios, and may preclude the Manager from acting promptly in a manner considered advisable by the Board. Applicants note that the Management Agreement will remain subject to section 15(a) of the act and rule 18f–2 under the Act, including the requirements for shareholder approval.

Applicants' Conditions

Applicants agree that any order granting the requested relief will be subject to the following conditions:

1. Before a Future Portfolio, that does not presently have an effective registration statement and whose public shareholders will purchase shares on the basis of a prospectus containing the disclosures contemplated by condition 2 below, may rely on the order requested herein, the operation of the Future Portfolio in the manner described in the application will be approved by the initial shareholder(s) before shares of such Future Portfolio are offered to the public.

2. The prospectus of each Portfolio relying on the requested relief will disclose the existence, substance and effect of any order granted pursuant to the application. In addition, each Portfolio will hold itself out to the public as employing the Manager/Subadviser Structure described in the application. The prospectus will prominently disclose that the Manager has the ultimate responsibility to oversee the Subadvisers and recommend their hiring, termination, and replacement.

3. The Manager will provide management and administrative services to each of the Portfolios, including overall supervisory responsibility for the general management and investment of each Portfolio, and, subject to review and approval by the Board, will: (a) Set each Portfolio's overall investment strategies; (b) evaluate, select and recommend Subadvisers to manage all or a part of a Portfolio's assets; (c) when appropriate, allocate and reallocate a Portfolio's assets among multiple Subadvisers; (d) monitor and evaluate the investment performance of Subadvisers; and (e) implement procedures reasonably designed to ensure that the Subadvisers comply with the relevant Portfolio's investment objectives, policies, and restrictions.

4. At all times, a majority of the Board will be Independent Trustees, and the nomination of new or additional Independent Trustees will be at the discretion of the then-existing Independent Trustees.

5. The Manager will not enter into a Subadvisory Agreement on behalf of a Portfolio with any Affiliated Subadviser unless such agreement, including the compensation to be paid thereunder, has been approved by the shareholders of the applicable Portfolio.

6. When a Subadviser change is proposed for a Portfolio with an Affiliated Subadviser, the Board, including a majority of the Independent Trustees, will make a separate finding, reflected in the minutes of meetings of the Board, that the change is in the best interests of the Portfolio and its

[2] The Fund's prospectus had disclosed, since the effective date of its registration statement, that the Fund would seek an exemptive order from the Commission permitting changes in Subadvisers without submitting the Subadvisory Agreements to a vote of the applicable Portfolio's shareholders.

shareholders and does not involve a conflict of interest from which the Manager or the Affiliated Subadviser derives an inappropriate advantage.

7. No trustee or officer of the Fund, or director or officer of the Manager will own directly or indirectly (other than through a pooled investment vehicle that is not controlled by the director, trustee or officer) any interest in a Subadviser except for (a) ownership of interests in the Manager or an entity that controls, is controlled by, or is under common control with the Manager; or (b) ownership of less than 1% of the outstanding securities of any class of equity or debt of a publicly-traded company that is either a Subadviser or an entity that controls, is controlled by, or is under common control with a Subadviser.

8. Within 90 days of the hiring of any new Subadviser, the Manager will furnish the shareholder of the applicable Portfolio all the information about the new Subadviser that would be included in a proxy statement. The disclosure will include any changes in such information caused by the addition of a new Subadviser. To meet this obligation, the Manager will provide the shareholders of the applicable Portfolios with an information statement meeting the requirements of Regulation 14C, Schedule 14C, and Item 22 of Schedule 14A under the Securities Exchange Act of 1934.

For the Commission, by the Division of Investment Management, under delegated authority.

Margaret H. McFarland,

Deputy Secretary.

[FR Doc. 00–20211 Filed 8–9–00; 8:45 am]

BILLING CODE 8010–01–M

SECURITIES AND EXCHANGE COMMISSION

[Investment Company Act Release No. 24593; 812–12182]

MPAM Funds Trust; Notice of Application

August 3, 2000.

AGENCY: Securities and Exchange Commission (''Commission'').

ACTION: Notice of an application for an order under section 12(d)(1)(J) of the Investment Company Act of 1940 (the ''Act'') for an exemption from section 12(d)(1)(G)(i)(II) of the Act.

Summary of the Application: Applicant MPAM Funds Trust requests an order to permit a fund of funds relying on section 12(d)(1)(G) of the Act to invest in securities and other financial instruments.

Filing Dates: The application was filed on July 21, 2000 and amended on July 31, 2000. Applicant has agreed to file an amendment, the substance of which is reflected in this notice, during the notice period.

Hearing or Notification of Hearing: An order granting the application will be issued unless the Commission orders a hearing. Interested persons may request a hearing by writing to the Commission's Secretary and serving applicant with a copy of the request, personally or by mail. Hearing requests should be received by the Commission by 5:30 p.m. on August 28, 2000, and should be accompanied by proof of service on applicants, in the form of an affidavit or, for lawyers, a certificate of service. Hearing requests should state the nature of the writer's interests, the reason for the request, and the issues contested. Persons who wish to be notified of a hearing may request notification by writing to the Commission's Secretary.

ADDRESSES: Secretary, Commission, 450 Fifth Street, NW., Washington, DC 20549–0609. Applicant, c/o Donald W. Smith, Esq., Kirkpatrick & Lockhart LLP, 1800 Massachusetts Avenue, NW., 2nd Floor, Washington, DC 20036.

FOR FURTHER INFORMATION CONTACT: Nadya B. Roytblat, Assistant Director, at (202) 942–0564 (Office of Investment Company Regulation, Division of Investment Management).

SUPPLEMENTARY INFORMATION: The following is a summary of the application. The complete application may be obtained for a fee at the Commission's Public Reference Branch, 450 Fifth Street, NW., Washington, DC 20549–0102 (tel. 202–942–8090).

Applicant's Representations

1. MPAM Funds Trust (the ''Trust'') is a Massachusetts business trust registered under the Act as an open-end management investment company. The Trust will consist of thirteen series,[1] one such series will be the MPAM Balanced Fund (''Balanced Fund''). MPAM Advisers (the ''Adviser''), a division of The Dreyfus Corporation, is an investment adviser registered under the Investment Advisers Act of 1940, and will serve as the investment adviser to each series of the Trust. The Balanced Fund will invest in shares of the other series of the Trust (collectively, the ''Underlying Funds''), as well as directly in stocks, bonds, and other securities. Applicant requests that the relief also apply to the other series of the Trust and any additional series organized in the future (an ''Upper Tier Fund'') that wish to invest in (a) any existing or future Underlying Fund or (b) any open-end management investment company or series thereof that is advised by the Adviser and is part of the same ''group of investment companies'' (as defined in section 12(d)(1)(G)(ii) of the Act) as the investing Upper Tier Fund.[2]

Applicant's Legal Analysis

1. Section 12(d)(1)(A) of the Act provides that no registered investment company may acquire securities of another investment company if such securities represent more than 3% of the acquired company's outstanding voting stock or more than 5% of the acquiring company's total assets, or if such securities, together with the securities of other investment companies, represent more than 10% of the acquiring company's total assets. Section 12(d)(1)(B) of the Act provides that no registered open-end investment company may sell its securities to another investment company if the sale will cues the acquiring company to own more than 3% of the acquired company's voting stock, or cause more than 10% of the acquired company's voting stock to be owned by investment companies.

2. Section 12(d)(1)(G) of the Act provides that section 12(d)(1) will not apply to securities of an acquired company purchased by an acquiring company if: (i) The acquiring company and the acquired company are part of the same group of investment companies: (ii) the acquiring company holds only securities of acquired companies that are part of the same group of investment companies, government securities, and short-term paper; (iii) the aggregate sales loads and distribution-related fees of the acquiring company and the acquired company are not excessive under rules adopted pursuant to section 22(b) or section 22(c) of the act by a securities association registered under section 15A of the Securities Exchange Act of 1934 or by the Commission; and (iv) the acquired company has a policy that prohibits it from acquiring securities of registered open-end management investment companies or registered unit investment trusts in reliance on section 12(d)(1)(F) of (G) of the Act. Applicant states that the proposed arrangement

[1] The Trust filed its initial registration statement on April 14, 2000. The registration statement is expected to become effective in September 2000.

[2] Applicant represents that any registered open-end management investment company that may rely on the order in the future will do so only in accordance with the terms and conditions of the application.

would comply with the provisions of section 12(d)(1)(G), but for the fact that the Balanced Funds' investment policies contemplate that its investments will include direct investments in equity securities, bonds, and other instruments. [3] as well as shares of the Underlying Funds.

3. Section 12(d)(1)(J) of the Act provides that the Commission may exempt persons or transactions from any provision of section 12(d)(1) if, and to the extent that, the exemption is consistent with the public interest and the protection of investors. Applicant requests an order under section 12(d)(1)(J) exempting it from section 12(d)(1)(G)(i)(II). Applicant asserts that permitting the Balanced Fund and other Upper Tier Funds to invest in Underlying Funds and directly in securities as proposed, would not raise any of the concerns that the requirements of section 12(d)(1)(G) were designed to address.

Applicant's Conditions

Applicant agrees that any order granting the requested relief will be subject to the following conditions:

1. Before approving any advisory contract under section 15 of the Act, the board of trustees of the Trust on behalf of the Balanced Fund or an Upper Tier Fund, including a majority of the trustees who are not ''interested persons'' as defined in section 2(a)(19) of the Act, will find that advisory fees, if any, charged under the contract are based on services provided that are in addition to, rather than duplicative of, services provided pursuant to any Underlying Fund's advisory contract. This finding, and the basis upon which it was made, will be recorded fully in the minute books of the Balanced Fund or Upper Tier Fund.

2. Applicant will comply with all provisions of section 12(d)(1)(G) of the Act, except for section 12(d)(1)(G)(i)(II) to the extent that it restricts the Balanced Fund or an Upper Tier Fund from investing directly in securities as described in the application.

For the Commission, by the Division of Investment Management, pursuant to delegated authority.

Margaret H. McFarland,

Deputy Secretary.

[FR Doc. 00–20212 Filed 8–9–00; 8:45 am]

BILLING CODE 8010–01–M

[3] Applicant states that these investments will not include shares of any registered investment companies that are not in the same group of investment companies as the Trust.

SECURITIES AND EXCHANGE COMMISSION

[Rel. No. IC–24591; 812–12002]

Wells Fargo Funds Trust, et al.; Notice of Application

August 3, 2000.

AGENCY: Securities and Exchange Commission (''SEC'' or the ''Commission'').

ACTION: Notice of application under section 6(c) of the Investment Company Act of 1940 (the ''Act'') for an exemption from section 15(f)(1)(A) of the Act.

Summary of Application: The requested order would permit certain investment companies advised by Wells Fargo Bank, N.A. (''Wells Fargo'') not to reconstitute their respective boards of trustees to meet the 75 percent non-interested director requirement of section 15(f)(1)(A) of the Act in order for Wells Fargo to rely upon the safe harbor provisions of section 15(f).

Applicants: Wells Fargo Fund Trust (''Funds Trust''), Wells Fargo Core Trust (''Core Trust''), and Wells Fargo.

Filing Date: The application was filed on August 3, 2000.

Hearing or Notification of Hearing: An order granting the requested relief will be issued unless the SEC orders a hearing. Interested persons may request a hearing by writing to the SEC's Secretary and serving applicants with a copy of the request, personally or by mail. Hearing requests should be received by the SEC's by 5:30 p.m. on August 28, 2000, and should be accompanied by proof of service on applicants, in the form of an affidavit or, for lawyers, a certificate of service. Hearing requests should state the nature of the writer's interest, the reason for the request, and the issues contested. Persons who wish to be notified of a hearing may request notification by writing to the SEC's Secretary.

ADDRESSES: Secretary, SEC, 450 5th Street, NW., Washington, DC 20549–0609. Applicants, 525 Market Street, San Francisco, California 94105.

FOR FURTHER INFORMATION CONTACT: J. Amanda Machen, Senior Counsel, (202) 942–7120, or Mary Kay Frech, Branch Chief, (202) 942–0564 (Office of Investment Company Regulation, Division of Investment Management).

SUPPLEMENTARY INFORMATION: The following is a summary of the application. The complete application may be obtained for a fee at the SEC's Public Reference Branch, 450 5th Street, NW., Washington, DC 20549–0102 (tel. 202–942–8090).

Applicants' Representations

1. Funds Trust and Core Trust are open-end management investment companies registered under the Act. Funds Trust consists of sixty-four series and Core Trust has fourteen portfolios. Wells Fargo, a bank and a wholly owned subsidiary of Wells Fargo & Company (''Wells''), currently serves as investment adviser to each of Funds Trust and Core Trust. Wells Fargo is not registered under the Investment Advisers Act of 1940 (''Advisers Act'') in reliance on section 202(a)(11) of the Advisers Act.

2. Great Plains Funds (''GP Funds'') is an open-end management investment company registered under the Act and consists of five series. First Commerce Investors, Inc. (''FCI''), a wholly-owned subsidiary of First Commerce Bancshares, Inc. (''First Commerce''), serves as investment adviser to each of the series of the GP Funds and is registered under the Advisers Act.

3. On or about June 15, 2000, Wells acquired First Commerce in a transaction in which First Commerce shareholders received Wells common stock and First Commerce became a wholly-owned subsidiary of Wells (the ''Acquisition''). Following the Acquisition, it is proposed that one new series and three existing series of Fund Trust (the ''Acquiring Funds Trust Series'') will acquire the assets of four series of GP Funds (the ''Great Plains Series'') (the ''Reorganization'') (the Acquisition and Reorganization are collectively referred to as the ''Transaction''). Two of the Acquiring Funds Trust Series invest substantially all of their assets in various portfolios of Core Trust (''Core Trust Portfolios'').

4. Applicants state that the Acquisition resulted in a change in control of FCI within the meaning of section 2(a)(9) of the Act, and in an assignment of the current advisory contract between FCI and the GP Funds within the meaning of section 2(a)(4) of the Act. As required by section 15(a)(4) of the Act, the advisory contract automatically terminated in accordance with its terms.

5. On May 9, 2000, the boards of trustees (each a ''Board'') of GP Funds and of Funds Trust unanimously approved the Reorganization. In addition, in reliance on rule 15a–4 under the Act, the Board of GP Funds unanimously approved an interim advisory agreement (''Interim Agreement'') between FCI and each of the Great Plains Series covering the time period between the date of the Acquisition and the closing date of the Reorganization. The Reorganization and

the Interim Agreement will require approval by a majority of the outstanding shares of the Great Plains Series voting on the proposals. Applicants states that the Board of GP Funds has scheduled a special meeting of the Great Plains Series' shareholders for August 23, 2000. Proxy materials for the special meeting were mailed to shareholders on July 13, 2000.

6. In connection with the Transaction, applicants have determined to seek to comply with the ''safe harbor'' provisions of section 15(f) of the Act. Applicants state that, absent exemptive relief, following consummation of the Transaction, more than 25 percent of the Boards of Funds Trust and Core Trust, which have identical membership, would be ''interested persons'' for purposes of section 15(f)(1)(A) of the Act.

Applicants' Legal Analysis

1. Section 15(f) of the Act is a safe harbor that permits an investment adviser to a registered investment company (or an affiliated person of the investment adviser) to realize a profit on the sale of its business if certain conditions are met. One of the conditions is set forth in section 15(f)(1)(A). This condition provides that, for a period of three years after the sale, at least 75 percent of the board of directors of the investment company may not be ''interested persons'' with respect to either the predecessor or successor adviser of the investment company. Applicants state that, without the requested exemption, following the Transaction, each of Funds Trust and Core Trust would have to reconstitute its Board to meet the 75% non-interested director requirement of section 15(f)(1)(A).

2. Section 15(f)(3)(B) of the Act provides that if the assignment of an investment advisory contract results from the merger of, or sale of substantially all of the assets by, a registered investment company with or to another registered investment company with assets substantially greater in amount, such discrepancy in size shall be considered by the SEC in determining whether, or to what extent, to grant exemptive relief under section 6(c) from section 15(f)(1)(A).

3. Section 6(c) of the Act permits the SEC to exempt any person or transaction from any provision of the Act, or any rule or regulation under the Act, if the exemption is necessary or appropriate in the public interest and consistent with the protection of investors and the purposes fairly intended by the policy and provisions of the Act.

4. Applicants request an exemption under section 6(c) of the Act from section 15(f)(1)(A) of the Act. Applicants state that, as of April 30, 2000, Funds Trust had approximately $61 billion in aggregate net assets. Applicants also state that, as of April 30, 2000, the aggregate net assets of the GP Funds were less than $450 million. Applicants thus assert that GP Funds' assets would represent less than 1% of the aggregate net assets of Funds Trust.

5. Applicants state that four of the ten trustees (''Trustees'') who serve on the Boards of Funds Trust and Core Trust are ''interested persons,'' within the meaning of section 2(a)(19) of the Act, of Wells Fargo. Applicants also state that two of the Trustees who are not interested persons on each Board are expected to retire at the end of 2000, but that no other changes to the Boards are anticipated. Applicants state that none of the Trustees who serve on the Board of GP Funds is an interested person of GP Funds, FCI, or Wells Fargo.

6. Applicants state that to comply with section 15(f)(1)(A) of the Act, Funds Trust and Core Trust would have to alter the composition of their Boards, either by asking experienced Trustees to resign or adding new Trustees. Applicants further state that adding new Trustees could require a shareholder vote not only of shareholders of the four Acquiring Funds Trust Series, but also the shareholders of Funds Trust series and Core Trust portfolios not otherwise affected by the Reorganization. Applicants assert that adding a substantial number of additional non-interested Trustees to each Board could entail a lengthy process and increase the ongoing costs of Funds Trust and Core Trust.

7. For the reasons stated above, applicants submit that the requested relief is necessary and appropriate in the public interest and consistent with the protection of investors and the purposes fairly intended by the policy and provisions of the Act.

For the Commission, by the Division of Investment Management, under delegated authority.

Margaret H. McFarland,

Deputy Secretary.

[FR Doc. 00–20213 Filed 8–9–00; 8:45 am]

BILLING CODE 8010–01–M

SECURITIES AND EXCHANGE COMMISSION

[Release No. PA–29; File No. S7–15–00]

Privacy Act of 1974: Establishment of a New System of Records: Child Care Subsidy Program (SEC–41)

AGENCY: Securities and Exchange Commission.

ACTION: Notice of the establishment of a new system of records.

SUMMARY: In accordance with the requirements of the Privacy Act of 1974, as amended, 5 U.S.C. 552a, the Securities and Exchange Commission (SEC or Commission) gives notice of a new Privacy Act system of records: ''Child Care Subsidy Program (SEC–41).'' This system will contain personal information submitted by lower income employees who apply for child care tuition subsidy.

DATES: The new system will become effective September 19, 2000 unless further notice is given. The Commission will publish a new notice if the effective date is delayed to review comments or if changes are made based on comments received. To be assured of consideration, comments must be received on or before September 11, 2000.

ADDRESSES: Persons wishing to submit comments should send three copies to Jonathan G. Katz, Secretary, U.S. Securities and Exchange Commission, 450 Fifth Street, NW., Washington, DC 20549–0609. All comment letters should refer to File No. S7–15–00. Comment letters will be available for public inspection and copying at the Commission's Public Reference Room, 450 Fifth Street, NW., Washington, DC 20549.

FOR FURTHER INFORMATION CONTACT: Betty A. Lopez, FOIA/Privacy Act Officer, (202) 942–4320, or Elizabeth T. Tsai, Staff Attorney, (202) 942–4326, Office of Freedom of Information and Privacy Act Operations, SEC, Operations Center, 6432 General Green Way, Alexandria, VA 22312–2413.

SUPPLEMENTARY INFORMATION: The Commission is proposing to delete its current ''Personnel Management Security Files (SEC–41)'' and reserve the system number ''SEC–41.'' The current SEC–41 consists merely of copies of some records in, and, thus, duplicates, ''Personnel Investigations Records (OPM/Central–9)'' [1] of the United States

[1] Describing the system location, OPM/Central–9 states, in part:

b. Decentralized segments: Copies of these records may exist temporarily in agencies on

Continued

Office of Personnel Management. Under 5 CFR 736.104(b), requests for these investigative records ''are to be submitted to the Office of Personnel Management, Federal Investigations Processing Center, FOI/PA, Boyers, Pennsylvania 16018.''

In addition, the Commission is proposing to establish a new system of records, entitled ''Child Care Subsidy Program (SEC–41).'' This system will contain personal information submitted by lower income employees who apply for child care tuition subsidy. This information will be considered in determining eligibility for and the amount of the subsidy. This data will come from application forms and supporting records submitted by employees.

The Commission has submitted a report of the new system of records to the U.S. House of Representatives, the Senate, and the Office of Management and Budget, under 5 U.S.C. 552a(r) and Appendix I to OMB Circular A–130, ''Federal Agency Responsibilities for Maintaining Records About Individuals,'' as amended on February 20, 1996 (61 FR 6435).

Accordingly, the Commission is adding a new system of records to read as follows.

SEC–41

SYSTEM NAME:

Child Care Subsidy Program.

SYSTEM LOCATION:

SEC, Operations Center, 6432 General Green Way, Alexandria, VA 22312–2413.

CATEGORIES OF INDIVIDUALS COVERED BY THE SYSTEM:

Present and former SEC employees and their children and child care providers.

CATEGORIES OF RECORDS IN THE SYSTEM:

(1) Employee's name, telephone numbers, address, grade, gross annual salary, gross family income that was reported on the latest Federal income tax return, and number of dependent children; (2) employee's child's name, date of birth, social security number, weekly tuition cost, amount of child care tuition subsidy from state or local government; and (3) employee's child care provider's name, address, telephone number, tax identification number, and license number.

AUTHORITY FOR MAINTENANCE OF THE SYSTEM:

Sec. 643, Pub. L. 106–58, 113 Stat. 477.

PURPOSE:

To determine eligibility for, and the amount of, the child care tuition subsidy for lower income SEC employees.

ROUTINE USES OF RECORDS MAINTAINED IN THE SYSTEM, INCLUDING CATEGORIES OF USERS AND THE PURPOSE OF SUCH USES:

In addition to the conditions of disclosure under 5 U.S.C. 552a(b), the SEC staff may provide these records to:

(1) Any Federal, state, or local government authority implementing child care subsidy programs or investigating a violation or potential violation of a statute, rule, regulation, or order;

(2) Any contractor that performs, on the SEC's behalf, services requiring the use of these records; and

(3) The Office of Personnel Management to be used for evaluating the child care subsidy program.

POLICIES AND PRACTICES FOR STORING, RETRIEVING, ACCESSING, RETAINING, AND DISPOSING OF RECORDS IN THE SYSTEM:

STORAGE:

These records are maintained in paper and/or electronic format.

RETRIEVABILITY:

These records are retrievable by the employee's name or social security number.

SAFEGUARDS:

When not in use, paper records are kept in locked rooms or metal cabinets in a building with security cameras and 24-hour security guards. Access to computer records requires the use of restricted passwords.

RETENTION AND DISPOSAL:

These records will be maintained permanently until their official retention period is established.

SYSTEM MANAGER AND ADDRESS:

Associate Executive Director, Office of Administrative and Personnel Management, SEC, Operations Center, 6432 General Green Way, Alexandria, VA 22312–2413.

NOTIFICATION PROCEDURES:

Requests to determine whether this system contains a record pertaining to the requesting individual should be sent to the Privacy Act Officer, SEC, Operations Center, 6432 General Green Way, Alexandria, VA 22312–2413.

RECORD ACCESS PROCEDURES:

Individuals who want to know how to gain access to or contest the contents of their records may contact the Privacy Act Officer, SEC, Operations Center, 6432 General Green Way, Alexandria, VA 22312–2413.

CONTESTING RECORD PROCEDURES:

See Record Access Procedures above.

RECORD SOURCE CATEGORIES:

Applications for child care subsidy and supporting records, which are voluntarily submitted by employees.

EXEMPTIONS CLAIMED FOR THE SYSTEM:

None.

By the Commission.
Dated: July 28, 2000.

Margaret H. McFarland,

Deputy Secretary.

[FR Doc. 00–20210 Filed 8–9–00; 8:45 am]

BILLING CODE 8010–01–P

current employees, former employees, or on contractor employees. These copies may be located in the personnel security office or other designated offices responsible for suitability, security clearance, access, or hiring determination on an individual. (''Agency'' as used throughout this system is deemed to include Legislative and Judicial branch establishments as well as those in the Executive Branch).

SECURITIES AND EXCHANGE COMMISSION

[Release No. 34–43113; File No. SR–CBOE–00–32]

Self-Regulatory Organizations; Notice of Filing and Immediate Effectiveness of Proposed Rule Change by Chicago Board Options Exchange, Inc. Relating to the Adoption of the CBOE Best Executive Assurance Program

Pursuant to section 19(b)(2) of the Securities Exchange Act of 1934 (''Act'') [1] and Rule 19b–4 thereunder,[2] notice is hereby given that on August 2, 2000, the Chicago Board Options Exchange, Inc. (''CBOE'' or the ''Exchange'') filed with the Securities and Exchange Commission (''Commission'') the proposed rule change as described in Items I, II, and III below, which Items have been prepared by the CBOE. The Commission is publishing this notice to solicit comments on the proposed rule change from interested persons.

I. Self-Regulatory Organization's Statement of the Terms of Substance of the Proposed Rule Change

The CBOE proposes to adopt the ''CBOE Best Executive Assurance Program SM'' (''BestEx SM''), which consists of existing Exchange rules and procedures, and to file the same as a stated policy, practice, or interpretation with respect to the meaning, administration, or enforcement of those rules and procedures.

[1] 15 U.S.C. 78s(b)(1).

[2] 17 CFR 240.19–4.

The text of the proposed rule change is available at the Office of the Secretary, CBOE and at the Commission.

II. Self-Regulatory Organization's Statement of the Purpose of, and Statutory Basis for, the Proposed Rule Change

In its filing with the Commission, the CBOE included statements concerning the purpose of and basis for the proposed rule change and discussed any comments it received on the proposed rule change. The text of these statements may be examined at the places specified in Item IV below. The CBOE has prepared summaries, set forth in sections A, B, and C below, of the most significant aspects of such statements.

A. Self-Regulatory Organization's Statement of the Purpose of, and Statutory Basis for, the Proposed Rule Change

Currently, the obligation of broker-dealers to provide best execution of their customers' orders is receiving increasing attention in the options markets. In part this is due to the fact that a greater number of options are traded in multiple markets than has been the case historically, which means that brokers now have greater choices concerning where to direct their customers' orders from execution. It is also due to a practice known as payment for order flow, whereby specialists or market makers offer to pay a specified amount to brokers for directing orders to them. This practice, which was introduced a number of years ago in the over-the-counter stock market and on certain regional stock exchanges, has now begun to appear in options markets, most recently including the CBOE.[3] the availability of payment for order flow has made it more important for firms to be able to demonstrate that they have given first priority to the obligation to provide best execution of their customers' orders, and have not permitted this obligation to be compromised by the firms' self-interest in obtaining such payment.[4]

In order to make its members aware of how the CBOE's systems, procedures and rules help them satisfy their best execution obligations when they direct orders to the CBOE for execution, the CBOE has recently announced its intention to introduce the BestEx program.[5] The BestEx program is based on existing rules of the CBOE that govern the operation of its auction market, including its Retail Automatic Execution System (''RAES''), and on Exchange systems such as the Order Routing System (''ORS'') and Public Automated Routing (''PAR'') workstations and on certain recent enhancements to those systems.

The BestEx program applies to customer orders received through ORS. The first step in processing these orders to assure that executions take place at the best available price is to direct all orders received over ORS that appear to be RAES-eligible to RAES for execution in accordance with Exchange Rule 6.8. Interpretation and Policy .02 under that Rule provides that no orders may be executed on RAES at a price that is inferior to the national best bid or offer (''NBBO'') as identified in RAES. Instead, these orders are either executed automatically in RAES at the NBBO, or, if the NBBO is better than the RAES price by more than an established ''step-up amount,'' the orders are rerouted to PAR. Customer orders received over ORS that do not appear to be RAES-eligible go directly to PAR.

Recent enhancements to PAR provide enhanced access to NBBO pricing information at the workstation. This places the floor broker in a position to know that an execution on CBOE will be at a price that is at least as good as the NBBO, unless there are valid reasons for believing that what appears to be a better price in another market is not obtainable or is otherwise not desired. Finally, in the event that an ORS order is executed on the CBOE at a price inferior to the NBBO, an advisory to that effect will automatically be sent to designated regulatory staff on the Exchange Floor, who will assist the members involved in the trade in deciding whether a price adjustment is called for under the circumstances.

As part of the BestEx Program, the Exchange will distribute daily and monthly reports to each member firm that identify orders that may have been executed outside of the NBBO, show what if any action was taken to adjust the price, and provide statistical data to enable firms to do their own analysis of the extent to which orders directed to the CBOE receive best execution. The combination of these systems, rules and procedures are designed to place members of the CBOE in a better position to know what is the NBBO at any time, and to give them greater assurance that the orders they direct to the CBOE over ORS will receive best execution. The CBOE recognizes that the current competitive environment has placed greater emphasis on the best execution obligations of its members. It is the CBOE's hope that, once members are able to employ the data from the BestEx program to demonstrate that they have satisfied their duty of best execution of customer orders, they will choose to direct more of their orders to the CBOE.

The Exchange represents that the BestEx program is designed to provide member firms with greater assurance that they have acted in a manner consistent with the fulfillment of their duty of best execution when they direct their customers' orders to the Exchange for execution. Accordingly, the Exchange believes that the proposed rule change is consistent with, and in furtherance of the objectives of, the Act, including specifically Section 6(b)(5)[6] thereof, which requires the rules of exchanges to promote just and equitable principles of trade, to remove impediments to and perfect the mechanism of a free and open market and a national market system, and to protect investors and the public interest.

B. Self-Regulatory Organization's Statement on Burden on Competition

The CBOE does not believe that the proposed rule change will impose any burden on competition that is not necessary or appropriate in furtherance of the purposes of the Act.

C. Self-Regulatory Organization's Statement on Comments on the proposed Rule Change Received from Members, Participants or Others

No written comments were solicited or received with respect to the proposed rule change.

III. Date of Effectiveness of the Proposed Rule Change and Timing for Commission Action

Because the CBOE has properly designated the proposed rule change as constituting a stated policy, practice, or interpretation with respect to the meaning, administration, or enforcement of an existing rule, it has become effective upon filing pursuant to section 19(b)(3)(A)(i) of the Act[7] and

[3] The CBOE recently implemented a marketing fee that allows funds to be made available to DMPs for their use in paying for order flow. *See* Securities Exchange Act Release No. 43112 (August 3, 2000), File No. SR–CBOE–00–28.

[4] In connection with the Exchange's implementation of the marketing fee to be used to attract order flow to the Exchange, the CBOE recently issued Regulatory Circular RG00–109, which describes regulatory issues raised by payment for order flow. Among other things, the Regulatory Circular emphasizes the obligation of member firms to provide best execution of their customers' orders without regard to considerations of payment for order flows.

[5] The BestEx Program is described in Exhibit A to the proposed rule change, which is available at the places specified in item IV below.

[6] 15 U.S.C. 78f(b)(5).

[7] 15 U.S.C. 78s(b)(3)(A)(i).

Rule 19b–4(f)(1) thereunder.[8] At any time within 60 days of the filing of this proposed rule change, the Commission may summarily abrogate the rule change if it appears to the Commission that such action is necessary or appropriate in the public interest, for the protection of investors, or otherwise in furtherance of the purposes of the Act.

IV. Solicitation of Comments

The Commission invites interested persons to submit written data, views, and arguments concerning the foregoing. Persons making written submissions should file six copies thereof with the Secretary, Securities and Exchange Commission, 450 Fifth Street, NW., Washington, DC 20549–0609. Copies of the submission, all subsequent amendments, all written statements with respect to the proposed rule change that are filed with the Commission, and all written communications relating to the proposed rule change between the commission and any person, other than those that may be withheld from the public in accordance with the provisions of 5 U.S.C. 552, will be available for inspection and copying in the Commission's Public Reference Room. Copies of such filing will also be available for inspection and copying at the principal office of the CBOE.

All submissions should refer to file No. SR–CBOE–00–32 and should be submitted by August 31, 2000.

For the Commission, by the Division of Market Regulation, pursuant to delegated authority.[9]

Margaret H. McFarland,

Deputy Secretary.

[FR Doc. 00–20256 Filed 8–9–00; 8:45 am]

BILLING CODE 8010–01–M

SECURITIES AND EXCHANGE COMMISSION

[Release No. 34–43112; File No. SR–CBOE–00–28]

Self-Regulatory Organizations; Notice of Filing and Immediate Effectiveness of Proposed Rule Change by Chicago Board Options Exchange, Inc. Relating to the Adoption of a New Marketing Fee

August 3, 2000.

Pursuant to section 19(b)(1) of the Securities Exchange Act of 1934 (''Act'')[1] and Rule 19b–4 thereunder,[2] notice is hereby given that on July 10, 2000, the Chicago Board Options Exchange, Inc. (''CBOE'' or the ''Exchange'') filed with the Securities and Exchange Commission (''Commission'') the proposed rule change as described in Items I, II, and III below, which Items have been prepared by the CBOE. The Commission is publishing this notice to solicit comments on the proposed rule change from interested persons.

I. Self-Regulatory Organization's Statement of the Terms of Substance of the Proposed Rule Change

The CBOE proposes to adopt a new marketing fee to be imposed on transactions of market makers (including Designated Primary Market Makers, or ''DPMs''), other than market-maker-to-market-maker transactions. The fee will be effective as of July 1, 2000, and will be imposed at the rate of $.40 per contract on all classes of equity options.

The text of the proposed rule change is available at the Office of the Secretary, CBOE and at the Commission.

II. Self-Regulatory Organization's Statement of the Purpose of, and Statutory Basis for, the Proposed Rule Change

In its filing with the Commission, the CBOE included statements concerning the purpose of and basis for the proposed rule change and discussed any comments it received on the proposed rule change. The text of these statements may be examined at the places specified in Item IV below. The CBOE has prepared summaries, set forth in sections A, B, and C below, of the most significant aspects of such statements.

A. Self-Regulatory Organization's Statement of the Purpose of, and Statutory Basis for, the Proposed Rule Change

The purpose of the proposed new marketing fee is to provide a source of revenue to the Exchange to be used for marketing purposes in light of changing competitive circumstances that have arisen, and may continue to arise, in particular classes of multiply traded equity options. These circumstances include the growing practice by some specialists on options exchanges of paying brokers for orders in multiply traded classes directed to these specialists. In light of this development and in order to be competitive in multiply traded options, the CBOE has determined to impose a new marketing fee on market makers' transactions (other than transactions between market makers) in designated classes of equity options.

All of the funds generated by the new fee will be segregated according to the station where the classes of options subject to the fee are traded, and will be made available to the DPM at the station where the funds were collected. These funds in turn will be used by the DPM to attract orders in the classes of options traded at that station. This use of funds could include payments made by the DPMs to broker-dealers for the orders they direct to the Exchange. The specific terms governing the orders that qualify for payment and the amount of any payment to be made will be determined by the DPMs in whatever manner they believe is most likely to be effective in attracting order flow to the Exchange in options traded at the DPMs' assigned stations.

The DPMs will be obligated to account to the Exchange for the use they make of funds made available to them by the Exchange for this purpose, but all determinations concerning the amount the DPMs may pay for orders and the types and sizes of orders that qualify for payment will be made exclusively by the DPMs, and not by the Exchange. The Exchange may provide administrative support to the DPMs in such matters as keeping track of the number of qualified orders each firm directs the Exchange, and making the necessary debits and credits to the accounts of the DPMs and the firms to reflect the payments that are to be made.

The new marketing fee will apply to all transactions of market makers (including DPMs), except for transactions solely between market makers. According to the CBOE, market-marker-to-market-maker trades will not be part of the program so as to avoid imposing added costs on what, for the most part, are hedging or rebalancing transactions of market makers entered into in support of their affirmative market maker obligations. Moreover, market-maker-to-market-maker transactions are not the kind of transaction that the marketing program is designed to attract in the first place. As an administrative matter, the marketing fee initially will be collected on all transactions of market makers, and will then be refunded to the extent it was collected on market-maker-to-market-maker trades. The CBOE represents that any changes to the classes of options to which the marketing fee applies, to the rate or rates which the fee is assessed, or to the disposition by the Exchange of funds generated by the fee will be the subject of separate filings with the Commission

---

[8] 17 CFR 240.19b–4(f)(1).

[9] 17 CFR 200.30–3(a)(12).

[1] 15 U.S.C. 78s(b)(1).

[2] 17 CFR 240.19b–4.

made pursuant to Section 19(b)(3)(A)(ii) of the Act.[3]

As described above, the proposed marketing fee will be imposed on all of the market makers (including the DPM) in the classes of options that are subject to the fee. The Exchange believes that, because these same persons will be able to participate in the order flow derived from the program, there will be a fair correlation between those members who pay the costs of the marketing program funded by the new fee and those who receive the benefits of the program.

In connection with any program involving payment for order flow that may be funded by the Exchange's proposed marketing fee, the Exchange will issue appropriate regulatory or educational circulars to its members that emphasize the disclosure and best execution obligations of members who may accept such payment.

The Exchange believes that the new marketing fee and the marketing programs it may fund, including any payment for order flow program, will serve to enhance the competitiveness of the Exchange and its members. Accordingly, the Exchange believes that the proposed rate change is consistent with and furthers the objectives of the Act, including specifically Section 6(b)(5)[4] thereof, which requires the rules of exchanges to be designed to remove impediments to and perfect the mechanism of a free and open market and a national market system, and Section 11A(a)(1)(C)[5] thereof, which reflects the finding of Congress that it is in the public interest and appropriate for the protection of investors and the maintenance of fair and orderly markets to assure fair competition among brokers and dealers and among exchange markets.

B. Self-Regulatory Organization's Statement on Burden on Competition

The CBOE does not believe that the proposed rule change will impose any burden on competition that is not necessary or appropriate in furtherance of the purposes of the Act.

C. Self-Regulatory Organization's Statement on Comments on the Proposed Rule Change Received from Members, Participants or Others

No written comments were solicited or received with respect to the proposed rule change.

[3] 15 U.S.C. 78s(b)(3)(A)(ii).

[4] 15 U.S.C. 78f(b)(5).

[5] 15 U.S.C. 78k(a)(1)(C).

III. Date of Effectiveness of the Proposed Rule Change and Timing for Commission Action

Because the foregoing rule change establishes or changes a due, fee, or other charge imposed by the Exchange, it has become effective pursuant to section 19(b)(3)(A)(ii) of the Act[6] and subparagraph (f)(2) of Rule 19b-1 thereunder.[7] At any time within 60 days of the filing of the proposed rule change, the Commission may summarily abrogate such rule change if it appears to the Commission that such action is necessary or appropriate in the public interest, for the protection of investors, or otherwise in furtherance of the purposes of the Act.

IV. Solicitation of Comments

The Commission, in the past, has raised serious concerns about payment for order flow and internalization.[8] Payment for order flow is of concern because brokers who are paid to send their customers' orders to one exchange have a conflict of interest that may reduce their commitment to the duty they owe their customers to find the best execution available.[9] While payment for order flow has been a common practice in the equities markets for some time, only recently has payment for order flow developed in the options markets. Despite these concerns, however, the CBOE's proposal involves the imposition of a fee and the Act gives exchanges wide latitude to establish, revise, and collect fees and other charges without prior Commission approval. The Commission invites interested persons to submit written data, views, and arguments concerning the foregoing, including whether the proposed rule is consistent with the Act. In particular, the Commission asks persons who submit comments whether the payment for order flow facilitated by the CBOE's proposal raises greater or different concerns than payment for order flow by specialists on other options exchanges. After receiving comments, and at any time within 60 days from the date the CBOE filed its proposal, the Commission can decide to require the CBOE to stop collecting the fee, refile the proposal, and await Commission approval before reinstituting the fee.

Persons making written submissions should file six copies thereof with the Secretary, Securities and Exchange Commission, 450 Fifth Street, NW., Washington, DC 20549–0609. Copies of the submission, all subsequent amendments, all written statements with respect to the proposed rule change that are filed with the Commission, and all written communications relating to the proposed rule change between the Commission and any person, other than those that may be withheld from the public in accordance with the provisions of 5 U.S.C. 552, will be available for inspection and copying in the Commission's Public Reference Room. Copies of such filing will also be available for inspection and copying at the principal office of the CBOE. All submissions should refer to File No. SR–CBOE–00–28 and should be submitted August 31, 2000.

For the Commission, by the Division of Market Regulation, pursuant to delegated authority.[10]

Margaret H. McFarland,

Deputy Secretary.

[FR Doc. 00–20259 Filed 8–9–00; 8:45 am]

BILLING CODE 8010–01–M

[6] 15 U.S.C. 78s(b)(3)(A)(ii).

[7] 17 CFR 240.19b-4(f)(2).

[8] *See* Securities Exchange Act Release No. 42450 (February 23, 2000), 65 FR 10577 (Feb. 28, 2000); Securities Exchange Act Release No. 34902 (October 27, 1994), 59 FR 55006 (Nov. 2, 1994). *See also* Securities Exchange Act Release No. 43084 (July 28, 2000).

[9] The CBOE has filed with the Commission a proposal to implement the ''CBOE Best Execution Assurance Program.'' *See* Securities Exchange Act Release No. 43113 (August 3, 2000), File No. SR–CBOE–00–32.

[10] 17 CFR 200.30–3(a)(12).

SECURITIES AND EXCHANGE COMMISSION

[Release No. 34–43114; File No. SR–CBOE–00–31]

Self-Regulatory Organizations; Notice of Filing and Immediate Effectiveness of Proposed Rule Change by the Chicago Board Options Exchange, Inc., to Amend its Rules to Allow for the Trading of Options on Securities that Represent Interests in Registered Investment Companies Based on Narrow-Based Indices or Portfolios of Securities

August 3, 2000.

Pursuant to section 19(b)(1) of the Securities Exchange Act of 1934 (''Act''),[1] 19b–4 thereunder,[2] notice is hereby given that on July 24, 2000, the Chicago Board Options Exchange Inc. (''CBOE'' or ''Exchange'') filed with the Securities and Exchange Commission (''SEC'' or ''Commission'') the proposed rule change as described in Items I, II, and III below, which Items have been prepared by the Exchange. The proposed rule change has been filed by the CBOE as a ''non-controversial'' rule

[1] 15 U.S.C. 78s(b)(1).

[2] 17 CFR 240.19b–4.

change effective upon filing under Section 19(b)(3)(A) of the Act [3] and Rule 19b-4(f)(6) [4] thereunder. The Commission is publishing this notice to solicit comments on the proposed rule change from interested persons.

I. Self-Regulatory Organization's Statement of the Terms of Substance of the Proposed Rule Change

The CBOE proposes to amend its rules to allow for the trading of options on securities that represent interests in registered investment companies based on narrow-based indices or portfolios of securities.

The text of the proposed rule change is available at the Office of the Secretary, CBOE and at the Commission.

II. Self-Regulatory Organization's Statement of the Purpose of, and Statutory Basis for, the Proposed Rule Change

In its filing with the Commission, the Exchange included statements concerning the purpose of and basis for the proposed rule change and discussed any comments it received on the proposed rule change. The text of these statements may be examined at the places specified in Item IV below. The Exchange has prepared summaries, set forth in Sections A, B, and C below, of the most significant aspects of such statements.

A. Self-Regulatory Organization's Statement of the Purpose of, and Statutory Basis for, the Proposed Rule Change

1. Purpose

On July 2, 1998, the Commission approved a proposed rule change to permit the trading of options on exchange-listed securities representing interest in open-end investment companies that hold securities comprising or based on stock indices or portfolios of securities (''Fund Shares'').[5] However, that rule change was limited to trading options on Fund Shares comprising or based on broad-based indices or portfolios. Accordingly, the Exchange now proposes to amend its rules to allow for the trading of options on exchange-listed securities representing interest in open-end investment companies that hold securities comprising or based on non-broad-based, or narrow-based, stock indices or portfolios of securities. The Exchange believes that the ability to trade options on Fund Shares based on narrow-based indices or portfolios is consistent with the options listing criteria for Fund Shares currently used by the American Stock Exchange, LLC (''Amex'').[6]

Fund shares are issued in exchange for an ''in-kind'' deposit of a specified portfolio of securities, together with a cash payment, in minimum size aggregations or multiples thereof (''Creation Units''). The size of the applicable Creation Unit size aggregation is set forth in the fund's prospectus, and varies from one series of Fund Shares to another, but generally is substantial. A fund generally will issue and sell Fund Shares in Creation Unit size through a principal underwriter on a continuous basis at the net asset value per share next determined after an order to purchase Fund Shares and the appropriate securities are received. Following issuance, Fund Shares are traded on an exchange like other equity securities, and equity trading rules apply. Likewise, redemption of Fund Shares is made in Creation Unit size and ''in-kind,'' with a portfolio of securities and cash exchanged for Fund Shares that have been tendered for redemption.

The CBOE trades options on Fund Shares pursuant to the same rules and procedures that apply generally to trading in options on equity securities, except that some special listing criteria are, under certain circumstances, applied to this category of options. The listing and maintenance standards for options on Fund Shares are set forth in Interpretation and Policy .06 under CBOE Rule 5.3 and in Interpretation and Policy .08 under CBOE Rule. 5.4, respectively. CBOE only lists options on Fund Shares that are principally traded on a national securities exchange or through the facilities of a national securities association and reported as national market securities. In addition, the initial listing standards require that either: (1) The Fund Shares meet the uniform options listing standards in Interpretation and Policy .01 under CBOE Rule 5.3, which include minimum public float, trading volume, and share price of the underlying security in order to list the option; or (2) the Fund Shares must be available for creation or redemption each business day in cash or in kind from the fund at a price related to the net asset value. In this event the Exchange will require that the fund is obligated to issue Fund Shares in a specified aggregate number even though some or all of the securities needed to be deposited have not been received by the fund, subject to the fund, subject to the condition that the person obligated to deposit the securities has undertaken to deliver the securities as soon as possible and such undertaking is secured by the delivery and maintenance of collateral consisting of cash or cash equivalents satisfactory to the fund, all as described in the fund prospectus.

In addition, the initial listing standards require that: (1) Any Fund Share with non-U.S. stocks in the underlying index or portfolio that are not subject to comprehensive surveillance agreements do not in the aggregate represent more than 50% of the weight of the index or portfolio; (2) stocks for which the primary market is in any one country that is not subject to a comprehensive surveillance agreement do not represent 20% or more of the weight of the index; and (3) stocks for which the primary market is in any two countries that are not subject to comprehensive surveillance agreements do not represent 33% or more of the weight of the index.

The Exchange's maintenance standards provide that if a particular series of Fund Shares should cease to trade on an exchange or as national market securities in the over-the-counter market, there will be no opening transactions in the options on the Fund Shares, and all such options will trade on a liquidation-only basis. In addition, the CBOE will consider the suspension of opening transactions in any series of options of the class covering Fund Shares if: (1) The options fail to meet the uniform equity option maintenance standards in paragraphs (a), (b), (c), and (d) of Interpretation and Policy .01 under CBOE Rule 5.4, when the options were listed pursuant to the equity option listing standards of Interpretation and Policy .01 under CBOE Rule 5.3; (2) following the initial twelve-month period beginning upon the commencement of trading of the Fund Shares on a national securities exchange or as national market securities through the facilities of a national securities association there are fewer than 50 record and/or beneficial holders of Fund Shares for 30 or more consecutive trading days, when options on Fund Shares were listed pursuant to clause D(y) under Interpretation and Policy .06, under CBOE Rule 5.3; or (3) the value of the index or portfolio of securities on which the Fund Shares are based is no longer calculated or available.

Margin requirements for Fund Shares are comparable to margin requirements

[3] 15 U.S.C. 78s(b)(3)(A).

[4] 17 CFR 240.19b–4(f)(6).

[5] *See* Securities Exchange Act Release No. 40166 (July 2, 1998), 63 FR 37430 (July 10, 1998) (File No. SR–CBOE–97–03).

[6] The Amex listing criteria were approved by the Commission on July 1, 1998. *See* Securities Exchange Act Release No. 40157 (July 1, 1998) 63 FR 37426 (July 10, 1998) (File No. SR–Amex–96–44).

that apply to index options under CBOE Chapter 12. Thus, the margin requirements for options on Fund Shares that represent interest in funds that hold securities based upon a narrow-based index or portfolio must have options margin that equals at least 100 percent of the current market value of the contract plus 20 percent of the market value of equivalent units of the underlying security value.

Lastly, the CBOE believes it has the necessary systems capacity to support the additional series of options that would result from the introduction of Fund Shares representing narrow-based indices or portfolios, and it has been advised that the Options Price Reporting Authority (''OPRA'') also has the capacity to support these additional series.[7]

2. Statutory Basis

By providing investors with a better means to hedge their positions in the underlying units within the framework of CBOE's regulated market place and providing investors with an alternative market center in which to trade these products, thereby increasing competition, the Exchange believes the proposed rule change is consistent with Section 6(b)(5) of the Act[8] in that is it designed to promote just and equitable principles of trade, to remove impediments to and perfect the mechanism of a free and open market and a national market system, and, in general, to protect investors and the public interest.

B. Self-Regulatory Organization's Statement on Burden on Competition

The CBOE does not believe that the proposed rule change will impose any burden on competition that is not necessary or appropriate in furtherance of the purposes of the Act.

C. Self-Regulatory Organization's Statement on Comments on the Proposed Rule Change Received from Members, Participants or Others

No written comments were solicited or received with respect to the proposed rule change.

III. Date of Effectiveness of the Proposed Rule Change and Timing for Commission Action

The foregoing proposed rule change has become effective pursuant to Section19(b)(3)(A) of the Act[9] and Rule 19(b)–4(f)(6) thereunder because the proposed rule change has been properly designated by the CBOE as effecting a change that: (1) Does not significantly affect the protection of investors or the public interest; (2) does not impose any significant burden on competition; and (3) does not become operative for 30 days from the date of filing, or such shorter time that the Commission may designate if consistent with the protection of investors and the public interest.[10] At any time within 60 days of the filing of the proposed rule change, the Commission may summarily abrogate such rule change if it appears to the Commission that such action is necessary or appropriate in the public interest, for the protection of investors, or otherwise in the furtherance of the purposes of the Act.[11]

The Exchange has requested that the rule change be accelerated to become operative immediately upon filing of the proposal to expeditiously provide investors with the a better means to hedge their positions in the underlying Fund Shares based on narrow-based indexes or portfolios, as well as an alternative market center in which to trade these products, thereby increasing competition.[12] In addition, the Exchange noted that options on narrow-based indexes are currently trading on the Amex.[13] The Commission finds that accelerating the operative date of the rule change is consistent with the protection of investors and the public interest, and thus designates July 24, 2000 as the operative date of this filing.[14]

IV. Solicitation of Comments

Interested persons are invited to submit written data, views, and arguments concerning the foregoing, including whether the proposed rule change is consistent with the Act. Persons making written submissions should file six copies thereof with the Secretary, Securities and Exchange Commission, 450 Fifth Street, NW, Washington, DC 20549–0609. Copies of the submission, all subsequent amendments, all written statements with respect to the proposed rule change that are filed with the Commission, and all written communications relating to the proposed rule change between the Commission and any person, other than those that may be withheld from the public in accordance with the provisions of 5 U.S.C. 552, will be available for inspection and copying at the Commission's Public Reference Room. Copies of such filing will also be available for inspection and copying at the principal office of the Exchange. All submissions should refer to File No. SR–CBOE–00–31 and should be submitted by August 31, 2000.

For the Commission, by the Division of Market Regulation, pursuant to delegated authority.[15]

Margaret H. McFarland,

Deputy Secretary.

[FR Doc. 00–20261 Filed 8–9–00; 8:45 am]

BILLING CODE 8010–01–M

[7] *See* Letter from Joe Corrigan, Executive Director, OPRA, to William Speth, Director of Research, CBOE, dated July 14, 2000.

[8] 15 U.S.C. 78f(b)(5).

[9] 15 U.S.C. 78s(b)(3)(A).

[10] As required under Rule 19b–4(f)(6)(iii), the CBOE provided the Commission with written notice of its intent to file the proposed rule change at least five business days prior to the filing date.

[11] 15 U.S.C. 78s(b)(3)(C).

[12] Telephone conversation between Angelo Evangelou, Attorney, Legal Division, CBOE, and Heather Traeger, Attorney, Division of Market Regulation, SEC, on July 28, 2000.

[13] *See supra* note 6.

[14] 17 CFR 240.19b–4(f)(6). For purposes only of accelerating the operative date of this proposal, the Commission has considered the proposed rule's impact on efficiency, competition, and capital formation. 15 U.S.C. 78c(f).

[15] 17 CFR 200.30–3(a)(12).

SECURITIES AND EXCHANGE COMMISSION

[Release No. 34–43105; File No. SR–NYSE–00–24]

Self-Regulatory Organizations; New York Stock Exchange, Inc.; Order Approving Proposed Rule Change Relating to Revising the Exchange's FORM AP–1 Application

August 2, 2000.

I. Introduction

On May 25, 2000, the New York Stock Exchange, Inc., (''NYSE'' or ''Exchange'') filed with the Securities and Exchange Commission (''SEC'' or ''Commission'') pursuant to section 19(b)(1) of the Securities Exchange Act of 1934 (''Act''),[1] and Rule 19b–4 thereunder,[2] a proposed rule change to revise the Exchange's FORM AP–1 (the ''Form'') Application. The proposed rule change was published for comment in the **Federal Register** on June 27, 2000.[3] No comments were received on the proposal. This order approves the NYSE's proposal.

II. Description of the Proposal

NYSE Rule 304(h) requires that ''[a]ny person who controls a member or member organization, or who engages in a securities or kindred business and is controlled by or under common control with a member or member organization but is not a member or allied member

[1] 15 U.S.C. 78s(b)(1).

[2] 17 CFR 240.19b–4

[3] Securities Exchange Act Release No. 42971 (June 21, 2000), 65 FR 39644.

or an employee of a member organization shall apply for approval by the Exchange as an approved person. . . .'' The approval process requires that certain pertinent information about the approved person Applicant be provided to the Exchange for review. FORM AP–1 is used by Applicants who are entities and FORM U–4 is completed by natural person Applicants.

The Exchange is proposing several revisions to FORM AP–1, which will require additional information and otherwise enhance its effectiveness for reviewing, approving, and monitoring Approved Persons.

The proposed substantive revisions to FORM AP–1:

• require greater detail regarding both the nature of an Applicant's business and the Applicant's relationship with the member organization (items 7A and 9A–C of the Form);

• require the Applicant, promptly upon request, to provide the Exchange with updated financial and other information (Instruction Sheet, No. 8);

• require the Applicant, if a registered broker-dealer, to submit a copy of its most recent FOCUS Report (Instruction Sheet, No. 10);

• continue the effectiveness of the Applicant's FORM AP–1 agreements with the Exchange notwithstanding that the named member or member organization has changed its name or legal form (p. 4 of the Form, 5th paragraph); and

• require that a copy of a complete organization chart of Applicant and its affiliates be provided (Instruction Sheet, No. 9).

The proposed revisions (Form items 7A and 9A–C) will provide Exchange staff with more detailed information regarding the relationship between the member organization and approved person, enabling a more thorough evaluation of the Applicant (*e.g.,* the Form asks for a general description of the Applicant's business and requires Applicant to indicate specifically how it controls, is controlled by or under common control with the member or member organization).

The proposed revisions clarify circumstances under which an Applicant must file financial statements (Instruction Sheet, No. 8). Item 12 of the Form asks the Applicant to submit to the Exchange its most recent balance sheet and income or profit and loss statement if the Applicant (a) Controls the member organization; (b) is a subsidiary of the member organization for purposes of NYSE Rule 321 or its obligations or liabilities are guaranteed, endorsed or assumed by the member organization (under NYSE Rule 322); or (c) is a ''Material Associated Person'' as the term is used in Rule 17h–1T under the Act. The Exchange believes that in most cases there is no regulatory purpose served by requiring submission of financial statements of persons under common control unless, as previously indicated, the person is a ''Material Associated Person.'' The Exchange, however, reserves the right to request current financial statements from applicants under common control. The Form also provides clarification that when financial statements are required to be submitted, they must be current, and clarification of the Exchange's right to request updated financial and other information. Approved person Applicants that are registered broker-dealers must submit copies of their most recent FOCUS report (Instruction Sheet, No. 10).

The revised Form contains a new provision which states that the Applicant agrees that the statements, warranties, representations and undertakings in the Form will continue to apply notwithstanding a change to the member organization's name, form of organization, or legal status (but retains same SEC B/D number). This will eliminate the need for more frequent re-filings of FORM AP–1 (*see* page 4 of the Form, 5th paragraph).

To clarify the relationship between the Applicant and the member organization, a complete organization chart of the Applicant and its affiliates must be submitted with the Form (Instruction Sheet, No. 9). An organization chart may also identify other entities which should be approved persons.

Certain additional changes are proposed in response to suggestions made by Commission staff. They include the addition of a question (item 7B of the Form) to elicit the identity of any ''foreign financial regulatory authority'' to which the Applicant may be subject. They also include highlighting (on the Instruction Sheet) the responsibility of the Applicant to disclose whether it, or any person associated therewith, is subject to a statutory disqualification, and noting on the instruction Sheet (No. 8) that any required financial statements must be submitted in English.

Several formatting revisions have also been made, such as italicizing defined terms and providing space for evidencing Exchange staff processing, which make the Form clearer and easier to use.

III. Discussion

The Commission finds that the proposal is consistent with the requirements of the Act of the rules and regulations thereunder applicable to a national securities exchange.[4] Specifically, the Commission believes that the proposal is consistent with the requirements of Section 6(b)(5) of the Act[5] because it is designed to prevent fraudulent and manipulative acts and practices, promotes just and equitable principles of trade, and, in general, protects investors and the public interest, in that it will enhance the process by which the Exchange reviews, approves, and monitors Approved Persons. The Commission believes that by providing more meaningful and detailed information for the Exchange's review, the proposed revisions to the NYSE's FORM AP–1, Application will enable the Exchange to make a better-informed decision concerning approval of applicants. The Commission also believes that such additional information on the application should improve the utility of the form in connection with the Exchange's regulatory oversight responsibilities.

IV. Conclusion

It is therefore ordered, pursuant to Section 19(b)(2) of the Act,[6] that the proposed rule change (SR–NYSE–00–24) is approved.

For the Commission, by the Division of Market Regulation, pursuant to delegated authority.[7]

Margeret H. McFarland,

Deputy Secretary.

[FR Doc. 00–20257 Filed 8–9–00; 8:45 am]

BILLING CODE 8010–01–M

SECURITIES AND EXCHANGE COMMISSION

[Release No. 34–43098; File No. SR–NYSE–99–46]

Self-Regulatory Organizations; Order Approving Proposed Rule Change by the New York Stock Exchange, Inc. to Amend Exchange Rule 104 (''Dealings by Specialists'')

July 31, 2000.

I. Introduction

On November 16, 1999, the New York Stock Exchange, Inc. (''NYSE'' or

[4] In approving this rule, the Commission has considered the proposed rule change's impact on efficiency, competition, and capital formation. 15 U.S.C. 78c(f).

[5] 15 U.S.C. 78f(b)(5).

[6] 15 U.S.C. 78s(b)(2).

[7] 17 CFR 200.30–3(a)(12).

''Exchange'') submitted to the Securities and Exchange Commission (''Commission''), pursuant to section 19(b)(1) of the Securities Exchange Act of 1934 (''Act'') [1] and Rule 19b–4 [2] thereunder, a proposed rule change. In its proposal, the NYSE seeks to increase capital requirements for specialist entities exceeding certain concentration-based criteria, and prescribe additional capital requirements for specialist entities resulting from merger, acquisition, consolidation, or other combinations of specialist assets. The proposed rule change was published for comment in the **Federal Register** on February 18, 2000.[3] The Commission received no comments on the proposed rule change, and this order approves the proposal.

II. Description of the Proposal

During the last decade, there has been a significant decline in the number of specialist units operating on the floor of the Exchange. Currently, there are 27 specialist units, with 491 specialists registered in 2,871 common stocks. The trend in specialist consolidations has raised concerns at the NYSE over the number of stocks assigned to any one specialist entity and the impact that market volatility can have on specialist entities and the overall operation of the market. The NYSE believes that adequate capitalization of the significantly larger specialist units is critical in dealing with volatile markets and in meeting specialist market maintenance obligations. Accordingly, the NYSE proposed Rule 104.21 to increase the minimum capital requirements of any specialist or specialist unit that exceeds certain concentration criteria.

The new provision would apply to any specialist or specialist unit whose market share is greater than 5% of any of the following concentration measures:

(1) All listed common stock (current);

(2) The 250 most active listed common stocks (over the previous 12 months);

(3) The total share volume of stock trading on the Exchange (over the previous 12 months);

(4) The total dollar value of stock trading on the Exchange (over the previous 12 months).

If the 5% threshold is exceeded, the new provision requires that the specialist entity maintain, at a minimum, net liquid assets equivalent to the following applicable requirements:

(1) $4 million for each specialist security contained in the Dow Jones Industrial Average;

(2) $2 million for each specialist security contained in the Standard & Poor's 100, not contained in 1;

(3) $1 million for each specialist security contained in the Standard & Poor's 500, not contained in 1 or 2;

(4) $500,000 for each specialist common stock, excluding bond funds, not contained in 1, 2, or 3;

(5) $100,000 for each specialist security not included in 1 through 4, excluding warrants.

In addition, proposed Rule 104.22 would require any new specialist entities resulting from merger, acquisition, consolidation, or other combination of specialist assets, to maintain net liquid assets equivalent to the greater of either:

(1) The aggregate net liquid assets of the specialist entities prior to their combination, or

(2) The capital requirements otherwise prescribed by Rule 104.

According to the Exchange, the purpose of this requirement is to prevent specialist units from withdrawing capital, prior to or upon combination of their assets, resulting in the combined entity having less capital than its component parts.

Because the proposal may subject specialist entities to sudden and substantially increased capital requirements, the proposal would grant the Exchange the discretion to allow a specialist entity to operate, for a period not to exceed 5 business days, despite the specialist entity's non-compliance with the provisions mentioned above. The Exchange believes that this limited discretionary authority would, under appropriate circumstances, permit the Exchange to determine a reasonable time period for the infusion of additional specialist capital without disruption the maintenance of a fair and orderly market, particularly in volatile market situations. The Exchange also believes that the time period would allow for the orderly reallocation of specialist securities in the event a specialist entity is unable to comply with the prescribed requirements. The NYSE notes that this authority extends only to compliance with the heightened concentration/combination standards proposed in this filing; it does not apply to the Commission's net capital requirements [4] or the net capital requirements prescribed by NYSE Rule 104.20.

Further, the Exchange proposed that the capital requirements of specialist securities not specifically addressed in the Rule (*i.e.,* certain derivatives and structured products) be determined by the Exchange according to a comparison of the products' structure and characteristics relative to the existing standardized securities whose capital requirements are currently prescribed in the Rule. The NYSE believes that this provision is necessary given the potentially limitless variety of derivative and structured products, which are not easily categorized. In addition, the NYSE proposes to clarify the definition of ''net liquid assets'' and distinguish its application to specialist units subject to the Commission's net capital rule from specialist units which are not.

The Exchange proposed that the effective date of the rule amendments will be no later than ninety (90) days from the date of Commission approval, but it may be earlier, *i.e.,* thirty (30) days following written notice to the membership if the NYSE determines that specialist entities are ready to comply with the new requirements.

III. Discussion

After careful review, the Commission finds that the proposed rule change is consistent with the requirements of the Act.[5] In particular, the Commission finds the proposal is consistent with Section 6(b)(5) [6] of the Act in that it addresses concerns about capitalization, operational efficiency, and risk management. Section 6(b)(5) requires, among other things, that the rules of an exchange be designed to promote just and equitable principles of trade and to protect investors and the public interest.

The Commission believes that these new requirements are appropriate because they help ensure that specialist units have sufficient, separately dedicated capital with which to meet their market making responsibilities. Specialists occupy a unique position at the NYSE, and under NYSE rules, specialists are charged with the responsibility of maintaining fair and orderly markets.[7] The proposal increases capital requirements for specialist entities exceeding certain concentration-based criteria. In times of market volatility, specialist entities that meet these concentration criteria could

[1] 15 U.S.C. 78s(b)(1).

[2] 17 CFR 240.19b–4.

[3] *See* Securities Exchange Act Release No. 42417 (February 11, 2000), 65 FR 8465.

[4] 17 CFR 240.15c3–1.

[5] In reviewing this proposal pursuant to Section 3(f) of the Act, the Commission has considered the proposed rule's impact on efficiency, competition, and capital formation. 15 U.S.C. 78c(f).

[6] 15 U.S.C. 78f(b)(5).

[7] *See* Exchange Rule 104.

potentially be subject to financial risk. This proposal helps ensure that these specialists are adequately capitalized and can meet their obligation of maintaining fair and orderly markets.

The Commission also believes that it is appropriate to place additional capital requirements on specialists units that are combining. The combined entity will be larger than either of the two (or more) original entities, responsible for more securities, and financially exposed to a larger degree. The potential impact of the financial failure of a large-sized specialist unit upon the NYSE would be proportionately greater in comparison to the failure of either original unit. Thus, imposing more stringent capitalization requirements upon the new unit should decrease the probability of any such failure, and minimize any subsequent detrimental impact upon the market place.

IV. Conclusion

It is therefore ordered, pursuant to Section 19(b)(2) of the Act,[8] that the proposed rule change (SR–NYSE–99–46) is approved.

For the Commission, by the Division of Market Regulation, pursuant to delegated authority.[9]

Margaret H. McFarland,

Deputy Secretary.

[FR Doc. 00–20258 Filed 8–9–00; 8:45 am]

BILLING CODE 8010–01–M

[8] 15 U.S.C. 78s(b)(2).

[9] 17 CFR 200.30–3(a)(12).

SECURITIES AND EXCHANGE COMMISSION

[Release No. 34–43111; File No. SR–NYSE–00–32]

Self-Regulatory Organizations; Notice of Filing of Proposed Rule Change by the New York Stock Exchange, Inc. to Extend the Pilot Relating to Shareholder Approval of Stock Option Plans

August 2, 2000.

Pursuant to section 19(b)(1) of the Securities Exchange Act of 1934 (''Exchange Act'') [1] and Rule 19b–4 thereunder,[2] notice is hereby given that on July 13, 2000, the New York Stock Exchange, Inc. (''Exchange'' or ''NYSE'') filed with the Securities and Exchange Commission (''SEC'' or ''Commission'') the proposed rule change as described in Items I, II, and III below, which Items have been prepared by the Exchange. The Commission is publishing this notice to solicit comments on the proposed rule change from interested persons.

I. Self-Regulatory Organization's Statement of the Terms of Substance of the Proposed Rule Change

The Exchange proposes to extend the effectiveness of the amendments to Sections 312.01, 312.03 and 312.04 of the Exchange's Listed Company Manual with respect to the definition of a ''broadly-based'' stock option plan (''1999 Proposal'').[3] The Commission approved 1999 Proposal on a pilot basis (''Pilot'') on June 4, 1999.[4] The Pilot is scheduled to expire on September 30, 2000. The Exchange proposes to extend the effectiveness of the Pilot until September 30, 2003.

II. Self-Regulatory Organization's Statement of the Purpose of, and Statutory Basis for, the Proposed Rule Change

In its filing with the Commission, the Exchange included statements concerning the purpose of and basis for the proposed rule change and discussed any comments it received on the proposed rule change. The text of these statements may be examined at the places specified in Item IV below. The Exchange has prepared summaries, set forth in sections A, B and C below, of the most significant aspects of such statements.

A. Self-Regulatory Organization's Statement of the Purpose of, and Statutory Basis for, the Proposed Rule Change

1. Purpose

The 1999 Proposal amended Sections 312.01, 312.03 and 312.04 of the Exchange's Listed Company Manual to reflect the recommendations formulated by a Stockholder Approval Policy Task Force (''Task Force''), which was established by the Exchange to review comments and make recommendations concerning possible changes to its definition of what constitutes a ''broadly-based'' stock option plan for purposes of the Exchange's shareholder approval policy. The Task Force also recommended that the Exchange actively consider utilizing an overall dilution maximum for all non-tax qualified plans that otherwise would be exempt from shareholder approval requirements. The Task Force recommended that the Exchange direct it or another appropriate group to immediately consider the dilution issue with a target date of the NYSE's September 1999 meeting of the Board of Directors.

The Exchange did so, and the Task Force continued its work and submitted a report of its findings to the Exchange's Board at the November 1999 meeting.[5] The Task Force, however, recommended implementing enhanced disclosure requirements for the compensation tables contained in a company's SEC filings.[6] Although the Task Force formulated dilution standards and presented them in its report, the Task Force believed and the Exchange's Board agreed, that such standards should be adopted uniformly by all the major listing markets in the United States. The Task Force was concerned that adoption of the dilution standard by only one market would lead to competition for listings based on disparities in the corporate governance rules of the respective markets. The Task Force believed that this would compromise the purposes intended to be served by those rules, and could undermine the public's confidence and trust in the markets.

Accordingly, the Exchange began discussions with the management of the National Association of Securities Dealers regarding a dilution standard, but no consensus has yet been achieved. The Exchange is requesting an extension of the Pilot for three years in order to permit additional industry discussion of the issues, while at the same time enabling the Exchange to continue to study the experience of NYSE listed companies and their investors that utilize the exemption from shareholder approval for broadly-based stock options plans, as approved in the Pilot.

The order issued by the Commission approving the 1999 Proposal on a pilot

[1] 15 U.S.C. 78s(b)(1).

[2] 17 CFR 240.19b–4.

[3] The Commission notes that the definition approved in the 1999 Proposal classifies a stock option plan as broadly-based if, pursuant to the terms of the plan (a) at least a majority of the issuer's full time, exempt U.S. employees are eligible to participate under the plan; and (b) at least a majority of the shares awarded under the plan (or shares of stock underlying options awarded under the plan) during the shorter of the three-year period commencing on the date the plan is adopted by the issuer or the term of the plan itself are made to employees who are not officers or directors of the issuer.

[4] Securities Exchange Act Release No. 41479, 64 FR 31667 (June 11, 1999).

[5] The Task Force had previously submitted a status report to the Commission in October 1999. *See* letter from Catherine Kinney, Group Executive Vice President, Office of the Chief Executive, NYSE, to Annette Nazareth, Director, Division of Market Regulation, SEC, dated October 28, 1999 (Status Report Submission NYSE 98–32).

[7] *See supra* note 4.

[8] The Commission notes that the Order directed the NYSE to address concerns raised regarding the three-year limit for reviewing grants awarded under broadly-based plans in any request to extend the Pilot by monitoring whether companies continue to

basis (''Order'')[7] requested that the Exchange submit a data report in connection with any extension request such as the one contained herein. Through review of supplemental listing applications submitted since June 4, 1999, the Exchange is determining which newly adopted stock option plans relied on the broadly-based exception set forth in the 1999 Proposal.

The Exchange estimates that given the number of companies involved and the fact that the information is not otherwise necessary for any other compliance reason, it will submit the requisite report to the Commission within forty-five days of this filing. Should the Exchange find that it will take significantly longer to compile the full report, the Exchange will prepare and submit to the Commission an interim report covering the information assembled during the 45-day period while continuing to work expeditiously to complete the report.

In the Order, the Commission noted the concern expressed by several commenters on the 1999 Proposal that the second part of the definition of a broadly-based plan, which focuses on actual grants awarded during the shorter of either the first three years of the life of a plan or the term of the plan itself, does not protect against actions the company may take *after* the first three years. The Commission stated that it expected the Exchange ''to monitor and notify those companies that are subject to this rule if it believes that they are not complying with the spirit of the rule by delaying actual awards under a Plan until the three-year period has expired.''[8]

The data which the Exchange will obtain from its companies and report to the Commission in connection with this extension request will give some indication of how companies are awarding grants under broadly-based plans, although the Exchange does not believe that this initial survey will provide any conclusive answers, and of course will not address whether companies will behave differently after the first three years of a plan. Nonetheless, if the grants reported by a company in connection with this survey appear heavily weighted towards officers and directors, the Exchange will counsel management of the company regarding the meaning and intent of the Exchange rule in an effort to assure that overall activity under the plan in the longer term will support the conclusion that the plan is in fact broadly-based.[9] Should the listing markets move to a dilution standard that will replace the broadly-based exception, monitoring for this issue will not be necessary in the long term.

2. Basis

The Exchange believes that the proposal is consistent with Section 6(b)(5) of the Act, which, among other things, requires that the rules of a national securities exchange be designed to promote just and equitable principles of trade, to remove impediments to and perfect the mechanism of a free and open market and a national market system and, in general, to protect investors and the public interest. The Exchange believes that extending the effectiveness of the Pilot until September 30, 2003 is consistent with these objectives because it will enable the Exchange to monitor the actions of listed companies with respect to their broadly-based plans, while permitting industry participants to continue discussions regarding a uniform dilution standard.

B. Self-Regulatory Organization's Statement on Burden on Competition

The Exchange does not believe that the proposed rule change will impose any burden on competition that is not necessary or appropriate in furtherance of the purposes of the Act.

C. Self-Regulatory Organization's Statement on Comments on the Proposed Rule Change Received from Members, Participants or Others

The Exchange has neither solicited nor received written comments on the proposal.

III. Date of Effectiveness of the Proposed Rule Change and Timing for Commission Action

Within 35 days of the date of publication of this notice in the **Federal Register** or within such longer period (i) as the Commission may designate up to 90 days of such date if it finds such longer period to be appropriate and publishes its reasons for so finding or (ii) as to which the self-regulatory organization consents, the Commission will:

(a) By order approve such proposed rule change, or

(b) Institute proceedings to determine whether the proposed rule change should be disapproved.

IV. Solicitation of Comments

Interested persons are invited to submit written data, views and arguments concerning the foregoing, including whether the proposed rule change is consistent with the Act. Persons making written submissions should file six copies thereof with the Secretary, Securities and Exchange Commission, 450 Fifth Street, NW., Washington, DC 20549–0609. Copies of the submission, all subsequent amendments, all written statements with respect to the proposed rule change that are filed with the Commission, and all written communications relating to the proposed rule change between the Commission and any person, other than those that may be withheld from the public in accordance with the provisions of 5 U.S.C. 552, will be available for inspection and copying in the Commission's Public Reference Room. Copies of such filing will also be available for inspection and copying at the principal office of the NYSE. All submissions should refer to File No. SR–NYSE–00–32 and should be submitted by August 31, 2000.

For the Commission, by the Division of Market Regulation, pursuant to delegated authority.[10]

Margaret H. McFarland,

Deputy Secretary.

[FR Doc. 00–20260 Filed 8–9–00; 8:45 am]

BILLING CODE 8010–01–M

[7] *See supra* note 4.

[8] The Commission notes that the Order directed the NYSE to address concerns raised regarding the three-year limit for reviewing grants awarded under broadly-based plans in any request to extend the Pilot by monitoring whether companies continue to administer plans in a broadly-based fashion to determine whether changes need to be made to the participation prong. Specifically, the Commission stated that the NYSE should address whether the development of a rolling three-year period or other alternative would be more appropriate to ensure that plans are administered in a broadly-based manner. Further, the Commission directed the NYSE to submit a monitoring report including, at a minimum, information on the types and number of employees who are eligible to participate in broadly-based stock options plans, as well as information concerning actual awards being made under such plans. The Commission expects that the monitoring report due to be submitted to the Commission will contain such information.

[9] *See supra* note 8.

[10] 17 CFR 200.30–3(a)(12).

SOCIAL SECURITY ADMINISTRATION

Privacy Act of 1974, as Amended; New System of Records and Routine Use Disclosures

AGENCY: Social Security Administration (SSA).

ACTION: New system of records and proposed new routine uses.

SUMMARY: In accordance with the Privacy Act (5 U.S.C. 552a(e)(4) and (e)(11)), we are issuing public notice of our intent to establish a new system of records entitled, the *Social Security*

Administration's (SSA's) Mandate Against Red Tape (hereinafter referred to as SMART). The proposed SMART system will maintain information collected for use in connection with SSA's implementation of a process for capturing and addressing employees' requests for waiver of internal Agency rules and procedures in order to improve work processes and working conditions, provide better customer service and encourage employee participation. The proposed new system of records will provide for routine use disclosures in connection with our administration of the Social Security Act, or disclosures mandated by Federal law. We invite public comment on this proposal.

DATES: We filed a report of the proposed new system of records with the President of the Senate, the Speaker of the House of Representatives, and the Director, Office of Information and Regulatory Affairs, Office of Management and Budget (OMB) on August 3, 2000. We have asked OMB to waive the 40-day advance notice requirement for the proposed SMART system. If OMB does grant the waiver, we will not implement before September 12, 2000, unless we receive comments which would warrant the system of records not being implemented.

ADDRESSES: Interested individuals may comment on this publication by writing to the SSA Privacy Officer, Social Security Administration, 3–A–6 Operations Building, 6401 Security Boulevard, Baltimore, Maryland 21235. All comments received will be available for public inspection at the above address.

FOR FURTHER INFORMATION CONTACT: Nancy Daniels, Program Analyst, Social Security Administration, Room 3–B–3 Operations Building, 6401 Security Boulevard, Baltimore, Maryland 21235, telephone (410) 965–1461.

SUPPLEMENTARY INFORMATION:

1. Background and Purpose of the Proposed Smart System

On April 21, 1998, President Clinton issued an Executive Memorandum regarding streamlining the granting of waivers. This Executive Memorandum directs Federal Agencies to adopt practices that effectively encourage innovation through granting employees waivers from certain internal Agency rules.

In response to this Executive Memorandum, the Social Security Administration (SSA) has developed ''Social Security Administration's (SSA's) Mandate Against Red Tape'' or ''SMART.'' SMART is an Agency-wide automated process to set aside administrative directives, policies and procedures that provide guidance for office operations, workflows and work processes but that have lost their usefulness and/or effectiveness.

In implementing SMART, the Agency will create a Website on our Intranet. This site will be the primary vehicle for SSA employees to submit SMART waiver requests, and will permit employees to see what waiver requests have been previously submitted and monitor the status of all requests within the review and approval process. Each SMART request submitted will receive a SMART request number that the employee can use to track that request. Because SSA can also retrieve information from the SMART system using employees' names and SSNs, the SMART system will constitute a system of records under the Privacy Act.

2. Collection, Maintenance, and Use of Data in the Proposed Smart System

We will obtain the information from our employees that will be maintained in the SMART automated system of records. The information will pertain to waivers requesting SSA to eliminate and/or set aside administrative directives, policies and procedures that provide guidance for office operations, workflows and work processes but that have lost their usefulness and/or effectiveness. The information maintained in the SMART system will include: identifying information such as employee's pay plan, employee's series and grade, position title, organization/office, Social Security number (SSN), timekeeper number, e-mail, FAX, Internet, and telephone number. We will maintain and retrieve this information by the employee's SMART request number.

3. Proposed Routine Use Disclosures of Data That Will be Maintained in the Proposed Smart System

We are proposing to establish routine uses of information that will be maintained in the proposed system as discussed below.

A. Disclosure to the Office of the President for the purpose of responding to an individual pursuant to an inquiry received from that individual or from a third party on his or her behalf.

We will disclose information under this routine use only in situations in which an individual may contact the Office of the President, seeking that office's assistance in an SSA matter on his or her behalf involving this system of records. Information would be disclosed when the Office of the President makes an inquiry and presents evidence that the Office is acting on behalf of the individual whose record is requested.

B. Disclosure to a congressional office in response to an inquiry from that office made at the request of the subject of a record.

We will disclose information under this routine use only in situations in which an individual may ask his or her congressional representative to intercede in an SSA matter on his or her behalf. Information would be disclosed when the congressional representative makes an inquiry and presents evidence that he or she is acting on behalf of the individual whose record is requested.

C. To Department of Justice (DOJ), a court, or other tribunal (either foreign or domestic), or another party before such tribunal when:

(1) SSA, or any component thereof; or

(2) Any SSA employee in his/her official capacity; or

(3) Any SSA employee in his/her individual capacity where DOJ (or SSA where it is authorized to do so) has agreed to represent the employee; or

(4) The United States or any agency thereof where SSA determines that the litigation is likely to affect the operations of SSA or any of its components, is a party to the litigation or has an interest in such litigation, and SSA determines that the use of such records by DOJ, the court, or other tribunal is relevant and necessary to the litigation, provided, however, that in each case, SSA determines that such disclosure is compatible with the purposes for which the records were collected.

We will disclose information under this routine use only as necessary to enable DOJ, a court, or other tribunal, to effectively defend SSA, its components or employees in litigation involving this system of records.

D. Disclosures to student volunteers and other workers, who do not have the status of Federal employees, when they are performing work for SSA as authorized by law, and they need access to personally identifiable information in SSA records in order to perform their assigned Agency functions.

Under certain Federal statutes, SSA is authorized to use the services of volunteers and participants in certain educational, training, employment and community service programs. Examples of such statutes and programs are: 5 U.S.C. 3111 regarding student volunteers; and 42 U.S.C. 2753 regarding the College Work-Study Program. We contemplate disclosing information under this routine use only

when SSA uses the services of these individuals and they need access to information in this system to perform their assigned duties.

E. Disclosure to contractors and other Federal agencies, as necessary, for the purpose of assisting SSA in the efficient administration of its programs.

We will disclose information under this routine use only in situations in which SSA may enter into a contractual agreement or similar agreement with a third party to assist in accomplishing an agency function relating to this system of records.

F. Nontax return information which is not restricted from disclosure by Federal law may be disclosed to the General Services Administration (GSA) and the National Archives and Records Administration (NARA) under 44 U.S.C. 2904 and 2906, as amended by NARA Act of 1984, for the use of those agencies in conducting records management studies.

The Administrator of GSA and the Archivist of NARA are charged by 44 U.S.C. 2904 with promulgating standards, procedures and guidelines regarding records management and conducting records management studies. Section 2906 of that law, also amended by the NARA Act of 1984, provides that GSA and NARA are to have access to Federal agencies' records and that agencies are to cooperate with GSA and NARA. In carrying out these responsibilities, it may be necessary for GSA and NARA to have access to this proposed system of records. In such instances, the routine use will facilitate disclosure.

4. Compatibility of Proposed Routine Uses

The Privacy Act (5 U.S.C. 552a(a)(7) and 552a(b)(3)) and our disclosure regulations (20 CFR Part 401) permit us to disclose information under a published routine use for a purpose which is compatible with the purpose for which we collected the information. Section 401.150(c) of the regulations permits us to disclose information under a routine use where necessary to assist in carrying out SSA programs. Section 401.120 of the regulations provides that we will disclose information when a law specifically requires the disclosure. The proposed routine uses lettered A–E above will ensure efficient administration of Social Security programs; the disclosures that would be made under routine use ''F'' are required by Federal law. Thus, all of the routine uses are appropriate and meet the relevant statutory and regulatory criteria.

5. Records Storage Medium and Safeguards For The Proposed Smart System

We will maintain information in the proposed SMART system in electronic form, computer data systems, and paper form. Only authorized SSA personnel who have a need for the information in the performance of their official duties will be permitted access to the information.

Security measures include the use of access codes to enter the computer systems that will maintain the data, and storage of the computerized records in secured areas that are accessible only to employees who require the information in performing their official duties. Any manually maintained records will be kept in locked cabinets or in otherwise secure areas. Also, all entrances and exits to SSA buildings are patrolled by security guards. Contractor personnel having access to data in the proposed and altered systems of records will be required to adhere to SSA rules concerning safeguards, access and use of the data. SSA personnel having access to the data on these systems will be informed of the criminal penalties of the Privacy Act for unauthorized access to or disclosure of information maintained in these systems. *See* 5 U.S.C. 552a(i)(1).

6. Effect of the Proposed Smart System on the Rights of Individuals

The proposed SMART system will enable SSA employees to request waivers of internal Agency rules which will lead to improved work processes and working conditions, provide better customer service and encourage employee participation. We will not use the information in any manner that will be adverse to the individuals to whom it pertains. Thus, we do not anticipate that the SMART system will have any unwarranted adverse effect on individuals.

Dated: August 3, 2000.

Kenneth S. Apfel,

Commissioner of Social Security.

60–0279

SYSTEM NAME:

SSA's Mandate Against Red Tape (SMART) Program Records, SSA/COSS/OCSI.

SECURITY CLASSIFICATION:

None.

SYSTEM LOCATION:

Social Security Administration (SSA), Office of the Commissioner, Office of Customer Service Integration (OCSI), 450 Altmeyer Building, 6401 Security Boulevard, Baltimore, Maryland 21235.

CATEGORIES OF INDIVIDUALS COVERED BY THE SYSTEM:

SSA employees who have made requests that the SSA eliminate and/or set aside administrative directives, polices and procedures that provide guidance for office operations, workflows and work processes that have lost their usefulness and/or effectiveness. Such requests for waivers of internal rules give employees real opportunities to perform their jobs faster, better and cost effectively.

CATEGORIES OF RECORDS IN THE SYSTEM:

Requests, evaluations of requests, name and office address of individual submitting the request and evaluating the request, other identifying information such as employee's pay plan, employee's series and grade, position title, organization/office, Social Security number (SSN), timekeeper number, e-mail address, FAX number, Internet address, and telephone number.

AUTHORITY FOR MAINTENANCE OF THE SYSTEM:

42 U.S.C. 405A and 5 U.S.C. 301.

PURPOSE(S):

Records in this system are used to control, evaluate, approve and adopt practices that effectively encourage innovation through granting employees waivers from certain internal agency rules. These records are maintained within the Office of the Commissioner, Office of Customer Service Integration (OCSI) in SSA.

ROUTINE USES OF RECORDS MAINTAINED IN THE SYSTEM, INCLUDING CATEGORIES OF USERS AND THE PURPOSES OF SUCH USES:

Disclosure may be made for routine uses as indicated below:

1. Disclosure to the Office of the President for the purpose of responding to an individual pursuant to an inquiry received from that individual or from a third party on his or her behalf.

2. Disclosure to a congressional office from the record of an individual in response to an inquiry from the congressional office made at the request of that individual.

3. Disclosure to the Department of Justice (DOJ), to a court or other tribunal, or to another party before such tribunal, when

(a) SSA, or any component thereof; or

(b) Any SSA employee in his/her official capacity; or

(c) Any SSA employee in his/her individual capacity where DOJ (or SSA, where it is authorized to do so) has agreed to represent the employee; or

(d) The United States or any agency thereof where SSA determines that the

litigation is likely to affect SSA or any of its components, is party to litigation or has in interest in such litigation, and SSA determines that the use of such records by DOJ, the court or other tribunal, or the other party before the tribunal is relevant and necessary to the litigation, provided, however, that in each case, SSA determines that such disclosure is compatible with the purpose for which the records were collected.

4. Disclosure to student volunteers, individuals working under a personal services contract, and other individuals performing functions for SSA, but technically not having the status of Agency employees, if they need access to the records in order to perform their assigned Agency functions.

5. Disclosure to contractors and other Federal Agencies, as necessary, for the purpose of assisting SSA in the efficient administration of its programs.

6. Disclosure to the General Services Administration (GSA) and the National Archives and Records Administration (NARA), which is not expressly restricted by Federal law, under 44 U.S.C. 2904 and 2906, as amended by the National Archives and Records Administration Act of 1984, for the use of those agencies in conducting records management studies for Non-tax return information.

POLICES AND PRACTICES FOR STORING, RETRIEVING, ACCESSING, RETAINING, AND DISPOSING OF RECORDS IN THE SYSTEM:

STORAGE:

The records are maintained electronically and in paper form (e.g., file folders) in locked file cabinets within OCSI.

RETRIEVABILITY:

The records are indexed and retrieved by the SMART request number assigned to the employee's request.

SAFEGUARDS:

This system of records is a data base that is accessible via an SSA Intranet Website. Security measures include the use of access codes to enter the data base, and storage of the electronic records in secured areas which are accessible only to employees who require the information in performing their official duties. The paper records that result from the electronic site are kept in locked cabinets or in otherwise secure areas. SSA, foreign site and contractor personnel having access to data in the system of records are required to adhere to SSA rules concerning safeguards, access, and use of the data. They also are informed of the criminal penalties of the Privacy Act for unauthorized access to or disclosure of information maintained in this system of records.

RETENTION AND DISPOSAL:

After final action to approve or deny a SMART request, it will be maintained for at least 7 years, or when it is determined that they are no longer needed, then destroyed in a manner appropriate to the storage media.

SYSTEM MANAGER(S) AND ADDRESS:

Social Security Administration, Office of the Commissioner, Manager, Office of Customer Service Integration, 450 Altmeyer Building, 6401 Security Boulevard, Baltimore, Maryland 21235.

NOTIFICATION PROCEDURES:

An individual can determine if this system contains a record about him or her by writing to the system manager at the above address. The requester should include his or her SMART request number along with and any other identifying information that's listed on the SMART Request Form.

An individual requesting notification of records in person need not furnish any special documents of identity. Documents he/she would normally carry on his/her person would be sufficient (e.g., employee identification badge, credit card, driver's license, or voter registration card). If an individual does not have identification papers sufficient to establish his/her identify, that individual must certify in writing that he/she is the person claimed to be and that he/she understands that the knowing and willful request for or acquisition or a record pertaining to an individual under false pretenses, is a criminal offense.

If notification is requested by telephone, an individual must verify his/her identity by providing identifying information that parallels the record to which notification is being requested. If it is determined that the identifying information provided by telephone is insufficient, the individual will be required to submit a request in writing or in person.

If a request for notification is submitted via mail, an individual must include a notarized request to SSA to verify his/her identity, or must certify in the request that he/she is the person claimed to be and that he/she understands that the knowing and willful request for or acquisition of a record pertaining to an individual under false pretenses is a criminal offense. These procedures are in accordance with SSA Regulations (20 CFR 401.50).

RECORD ACCESS PROCEDURES:

Same as notification procedures. Requesters should also reasonably specify the record contents being sought. These procedures are in accordance with SSA Regulations (20 CFR 401.65).

CONTESTING RECORD PROCEDURES:

Same as notification procedures. Also, requesters should reasonably identify the record, specify the information they are contesting, state the corrective action sought and the reasons for the correction with supporting justification showing how the record is incomplete, untimely, inaccurate or irrelevant. These procedures are in accordance with SSA Regulations (20 CFR 401.50).

RECORD SOURCE CATEGORIES:

Incoming requests, responses, evaluations and other information obtained during the course of deciding to adopt a request.

SYSTEM EXEMPTED FROM CERTAIN PROVISIONS OF THE ACT:

None.

[FR Doc. 00–20222 Filed 8–09–00; 8:45 am]

BILLING CODE 4190–29–M

DEPARTMENT OF STATE

[Public Notice 3382]

Bureau of Educational and Cultural Affairs Request for Proposals: Bilkent University (Turkey) Student Teacher Internship Program; Notice: Request for Proposals

SUMMARY: The Office of Global Educational Programs of the Bureau of Educational and Cultural Affairs announces an open competition for the Bilkent University Student Teacher Internship Program. University schools of education meeting the provisions described in IRS regulation 26 CFR 1.501(c) may submit proposals to administer an eight-week teacher training program for graduate students of education from Bilkent University, a private institution in Ankara, Turkey. The focus of the internship is to familiarize participants with student-centered teaching methods and the use of technology in the classroom. Interested organizations must have strong contacts with local school districts, preferably in both their own and neighboring states in order to provide exposure to different educational approaches. The successful proposal will demonstrate the organization's experience in international educational exchange and

internship programs, and an understanding of Turkish history, culture, religion and education. Internship schools may be public, private, magnet or charter schools, but should exemplify best practices.

Program Information

Background

The participants will be graduate students enrolled in Bilkent University Graduate School of Education's MA in Teacher Education, an innovative Master's Degree program to train high school level teachers of all subjects in constructivist, student-centered teaching methods. Endorsed by the Turkish Ministry of Education, this is the first program of its kind in the country. Bilkent course requirements include civic education, the history of civilization, and classical texts in humanities and political philosophy. Students will have completed one year of academic work before their internships in the U.S. Twenty-five English-speaking student teachers will be selected by Bilkent University and the Fulbright Commission in Turkey. Following the internship, the students will return to Bilkent for approximately seven more months of academic study.

In the long-term, this program is expected to assist Turkish educators as they prepare students to live in an increasingly interdependent world. Additional background information on Bilkent University and the Turkish educational system can be found in the Program Objectives, Goals and Implementation (POGI) document.

Objectives

The goal of the eight-week program is to provide participants with thorough exposure to student-centered teaching approaches and the use of technology in American schools. After an academic and cross-cultural orientation in the U.S., the teachers will be placed in small groups at local schools. Student teachers will be paired with experienced U.S. teachers whose fields of study match their own. Internship activities will include: observing a variety of teaching methods (inquiry, active classroom, group projects, etc.) as well as computer-based lessons; working individually with a mentor teacher on curriculum development; and team teaching. While the greatest emphasis is placed on immersing student teachers actively in the American classroom environment, experiential learning will be complemented by professional development seminars on related topics. The internship and seminars will also help participants to create a curriculum development project or portfolio.

Components of U.S. Program

- Orientation (2–4 days): introduction to U.S. government as it relates to education, U.S. education system, American culture through site visits and a cross-cultural adjustment seminar;
- Site visits in school districts (2–3 days): to all levels and types of schools, including economically and ethnically diverse schools;
- Internships in high schools (6 weeks): each student teacher will work individually with a mentor teacher; activities include classroom observation, team teaching, and cultural presentations;
- Exposure to local school governance: through such activities as attendance at faculty, board of education, and PTA meetings;
- Professional development seminars to complement school-based training: topics may include classroom management, conflict resolution, diversity, and curriculum development. Seminars may be dispersed throughout the six weeks or take place in the form of a mid-program conference/debriefing;
- Final debriefing (1–2 days): Student teachers will share what they have observed and learned, perhaps through presentations they make to each other;
- Curriculum development project: By the end of the eight-week program, the student teachers will complete a project, incorporating a new teaching method or technology that they will find useful in conjunction with a course at Bilkent University or in the classroom when they begin to teach. This component is crucial for continuity and impact of the U.S. experience;
- Cultural experiences: This should include interaction with the local community through home stays and non-school-based groups, activities reflecting the diversity of American society, and opportunities for participants to speak about Turkish history and culture.

Grantee's Responsibilities

- Locate school districts to host groups for internships through informal competition (schools must submit brief proposal outlining their interest, understanding of goals, examples of best practices, and commitment to mentoring). School districts should be reasonably near the administering organization, but may be located in different states if feasible, to expose participants to more than one educational system or approach;
- Conduct orientation, professional development seminars and debriefing;
- Monitor and evaluate the program;
- Administer all participant logistics: international transportation, ground transportation to local schools and training sites, participant per diem and housing, U.S. government forms such as tax and social security, etc.
- Arrange for home stays, perhaps through local schools or other participating organization; if home stays are not available, arrange other cost efficient housing; home stay hosts, as well as schools, should be sensitive to accommodating participants' religious observance;
- Administer all financial aspects of the program and comply with reporting requirements;
- Plan follow-on activities with host schools and participants in conjunction with participants' academic program.

The Fulbright Commission in Turkey will assist in obtaining international airline tickets, visas, and health insurance. The grantee will pay the airline office in Ankara for air tickets. There will be no cost to the program for visas and insurance. The Fulbright Commission will also conduct a pre-departure orientation and post-program evaluation. The grantee will coordinate with the Fulbright Commission in Turkey on all non-U.S. based aspects of program administration. The proposal should address mechanisms for communication and coordination.

The grantee will coordinate with the Fulbright Teacher Exchange Branch in the Bureau of Educational and Cultural Affairs regarding all U.S.-based activities, reporting and evaluation.

It is envisioned that, contingent upon availability of funding and successful completion of the program, this program may be renewed for two more years, thus training a corps of 75 student teachers in new student-centered teaching methods and classroom technology. It will be important for the grantee to help create a network for participants to communicate and support each other in using the new methodologies after they have become teachers. A strong proposal will address follow-on activities in conjunction with the Fulbright Commission and Bilkent University (without Bureau funding) to increase future impact and participant support.

The grant will begin on or about March 1, 2001 and the grantee should complete all exchange activities by May, 2002. The internship program will take place in October-November, 2001.

Please refer to additional program specific guidelines in the Project Objectives, Goals, and Implementation (POGI) document.

Programs must comply with J–1 visa regulations. Please refer to Solicitation Package for further information.

Budget Guidelines

Since grants awarded to eligible organizations with fewer than four years of experience in coordinating international exchanges are limited to $60,000, such organizations are not eligible to compete for this grant.

Applicants must submit a comprehensive budget for the entire program. Maximum funding available for this program is $170,000. There must be a summary budget as well as breakdowns reflecting both administrative and program budgets. Applicants may provide separate sub-budgets for each program component, phase, location, or activity to provide clarification. Cost-sharing is encouraged. Allowable costs for the program, on a per participant basis, include the following:

1. International Travel
2. U.S. Ground Transportation
3. Host Schools (for administrative costs)
4. Professional Development Seminars/Conference and Debriefing (instruction, materials, logistics)
5. Participant lodging and per diem
6. Cultural Activities
7. Book Allowance/Shipping
8. Grantee Administrative Costs

Please refer to the Solicitation Package for complete budget guidelines and formatting instructions.

Announcement Title and Number

All correspondence with the Bureau concerning this RFP should reference the above title and number *ECA/A/S/X–01–02.*

FOR FURTHER INFORMATION CONTACT: The Teacher Exchange Branch of the Office of Global Educational Programs, ECA/A/S/X, Room 349, U.S. Department of State, 301 4th Street, SW., Washington, DC 20547, telephone: 202–619–4568, fax: 202–401–1433, e-mail: rwaldste@pd.state.gov, to request a Solicitation Package. The Solicitation Package contains detailed award criteria, required application forms, specific budget instructions, and standard guidelines for proposal preparation. Please specify Bureau Program Officer Rachel Waldstein on all other inquiries and correspondence.

Please read the complete **Federal Register** announcement before sending inquiries or submitting proposals. Once the RFP deadline has passed, Bureau staff may not discuss this competition with applicants until the proposal review process has been completed.

To Download a Solicitation Package Via Internet

The entire Solicitation Package may be downloaded from the Bureau's website at http://exchanges.state.gov/education/rfps. Please read all information before downloading.

Deadline for Proposals

All proposal copies must be received at the Bureau of Educational and Cultural Affairs by 5 p.m. Washington, DC time on Monday, November 6. Faxed documents will not be accepted at any time. Documents postmarked the due date but received on a later date will not be accepted. Each applicant must ensure that the proposals are received by the above deadline.

Applicants must follow all instructions in the Solicitation Package. The original and seven copies of the application should be sent to: U.S. Department of State, SA–44, Bureau of Educational and Cultural Affairs, Ref.: *ECA/A/S/X–01–02*, Program Management, ECA/EX/PM, Room 336, 301 4th Street, S.W., Washington, D.C. 20547.

Applicants must also submit the ''Executive Summary'' and ''Proposal Narrative'' sections of the proposal on a 3.5'' diskette, formatted for DOS. These documents must be provided in ASCII text (DOS) format with a maximum line length of 65 characters. The Bureau will transmit these files electronically to the Public Affairs section at the US Embassy for its review, with the goal of reducing the time it takes to get embassy comments for the Bureau's grants review process.

Diversity, Freedom and Democracy Guidelines

Pursuant to the Bureau's authorizing legislation, programs must maintain a non-political character and should be balanced and representative of the diversity of American political, social, and cultural life. ''Diversity'' should be interpreted in the broadest sense and encompass differences including, but not limited to ethnicity, race, gender, religion, geographic location, socio-economic status, and physical challenges. Applicants are strongly encouraged to adhere to the advancement of this principle both in program administration and in program content. Please refer to the review criteria under the 'Support for Diversity' section for specific suggestions on incorporating diversity into the total proposal. Public Law 104–319 provides that ''in carrying out programs of educational and cultural exchange in countries whose people do not fully enjoy freedom and democracy,'' the Bureau ''shall take appropriate steps to provide opportunities for participation in such programs to human rights and democracy leaders of such countries.'' Proposals should reflect advancement of this goal in their program contents, to the full extent deemed feasible.

Review Process

The Bureau will acknowledge receipt of all proposals and will review them for technical eligibility. Proposals will be deemed ineligible if they do not fully adhere to the guidelines stated herein and in the Solicitation Package. All eligible proposals will be reviewed by the program office, as well as the Public Diplomacy section overseas, where appropriate. Eligible proposals will be forwarded to panels of Bureau officers for advisory review. Proposals may also be reviewed by the Office of the Legal Adviser or by other Department elements. Final funding decisions are at the discretion of the Department of State's Under Secretary for Public Diplomacy and Public Affairs. Final technical authority for assistance awards (grants or cooperative agreements) resides with the Bureau's Grants Officer.

Review Criteria

Technically eligible applications will be competitively reviewed according to the criteria stated below. These criteria are not rank ordered and all carry equal weight in the proposal evaluation:

1. Quality of the program idea
2. Program planning and ability to achieve program objectives
3. Cross-Cultural Sensitivity
4. Support of Diversity
5. Institutional Capacity and Record
6. Impact/Follow-on Activities
7. Project Evaluation
8. Cost-effectiveness/Cost-sharing

Please see the Program Objectives, Goals and Implementation (POGI) document for a more detailed description of Review Criteria.

Authority

Overall grant making authority for this program is contained in the Mutual Educational and Cultural Exchange Act of 1961, Public Law 87–256, as amended, also known as the Fulbright-Hays Act. The purpose of the Act is ''to enable the Government of the United States to increase mutual understanding between the people of the United States and the people of other countries * * *; to strengthen the ties which unite us

with other nations by demonstrating the educational and cultural interests, developments, and achievements of the people of the United States and other nations * * * and thus to assist in the development of friendly, sympathetic and peaceful relations between the United States and the other countries of the world.'' The funding authority for the program above is provided through legislation and is subject to availability of Congressional funding.

Notice

The terms and conditions published in this RFP are binding and may not be modified by any Bureau representative. Explanatory information provided by the Bureau that contradicts published language will not be binding. Issuance of the RFP does not constitute an award commitment on the part of the Government. The Bureau reserves the right to reduce, revise, or increase proposal budgets in accordance with the needs of the program and the availability of funds. Awards made will be subject to periodic reporting and evaluation requirements.

Notification

Final awards cannot be made until funds have been appropriated by Congress, allocated and committed through internal Bureau procedures.

Dated: July 31, 2000.

Evelyn S. Lieberman,

Under Secretary for Public Diplomacy and Public Affairs, U.S. Department of State.

[FR Doc. 00–20326 Filed 8–9–00; 8:45 am]

BILLING CODE 4710–11–P

DEPARTMENT OF STATE

[Public Notice #: 3349]

Advisory Commission on Public Diplomacy; Notice of Meeting

The U.S. Advisory Commission on Public Diplomacy, reauthorized pursuant to Pub.L. 106–113 (H.R. 3194, Consolidated Appropriations Act, 2000), will meet on Tuesday, September 12, 2000 in Room 600, 301 4th St., SW., Washington, DC from 2 pm to 4 pm.

The Commission will discuss its plans for assessing the consolidation of USIA into the State Department and the effectiveness of U.S. public diplomacy in the former Soviet Union.

Members of the general public may attend the meeting, though attendance of public members will be limited to the seating available. Access to the building is controlled, and individual building passes are required for all attendees. Persons who plan to attend should contact David J. Kramer, Executive Director, at (202) 619–4463.

Dated: August 2, 2000.

David J. Kramer,

Executive Director, Advisory Commission on Public Diplomacy, Department of State.

[FR Doc. 00–20325 Filed 8–9–00; 8:45 am]

BILLING CODE 4710–11–U

DEPARTMENT OF TRANSPORTATION

Office of the Secretary

Aviation Proceedings, Agreements Filed During the Week Ending July 28, 2000

The following Agreements were filed with the Department of Transportation under the provisions of 49 U.S.C. 412 and 414. Answers may be filed within 21 days after the filing of the application.

Docket Number: OST–2000–7691.

Date Filed: July 25, 2000.

Parties: Members of the International Air Transport Association.

Subject: PTC12 USA–EUR Fares 0047 dated July 21, 2000, Resolution 015h—USA Add-on Amounts between USA and UK, Intended effective date: October 1, 2000.

Dorothy Y. Beard,

Federal Register Liaison.

[FR Doc. 00–20338 Filed 8–9–00; 8:45 am]

BILLING CODE 4910–62–U

DEPARTMENT OF TRANSPORTATION

Federal Aviation Administration

Agency Information Collection Activity Under OMB Review

AGENCY: Federal Aviation Administration (FAA), DOT.

ACTION: Notice.

SUMMARY: In compliance with the Paperwork Reduction Act of 1995 (44 U.S.C. 3501 *et seq.*), this notice announces that the Information Collection Request (IRC) abstracted below has been forwarded to the Office of Management and Budget (OMB) for extension of currently approved collection. The ICR describes the nature of the information collection and the expected burden. The **Federal Register** Notice with a 60-day comment period soliciting comments on the following collection of information was published on May 9, 2000 [FR 65, pages 26871–26872].

DATES: Comments must be submitted on or before September 11, 2000. A comment to OMB is most effective if OMB receives it within 30 days of publication.

FOR FURTHER INFORMATION CONTACT: Judy Street on (202) 267–9895.

SUPPLEMENTARY INFORMATION: Federal Aviation Administration (FAA).

Title: Aviation Research Grants Program.

Type of Request: Extension of a currently approved collection.

OMB Control Number: 2120–0559.

Form(s): FAA Forms 9550–1; 9550–2; 9550–3; 90550–5; and SF–269; SF–270; SF–272; SF–3881; SF–LLL.

Affected Public: 100 Respondents.

Abstract: The FAA Aviation Research and Development Grants Program establishes uniform policies and procedures for the award and administration of research grants to colleges, universities, not for profit organizations, and profit organizations for security research. This program implements OMB Circular A–110, Pub. L. 101–508, section 9205, 9208, and Pub. L. 101–604 section 107(d). The Administrator of the FAA is empowered under this program to make directed grants for research and development deemed by the Administrator to be required for the long-term growth of civil aviation. Information will be required from grantees for the purpose of grant administration and review in accordance with applicable OMB Circulars.

Estimated Annual Burden Hours: 1400 burden hours annually.

Issued in Washington, DC, on August 4, 2000.

Patricia W. Carter,

Acting Manager, Standards and Information Division, APF–100.

[FR Doc. 00–20280 Filed 8–9–00; 8:45 am]

BILLING CODE 4910–13–M

DEPARTMENT OF TRANSPORTATION

Federal Aviation Administration

Receipt of Noise Compatibility Program and Request for Review; Port Columbus International Airport, Columbus, Ohio

AGENCY: Federal Aviation Administration, DOT.

ACTION: Notice.

SUMMARY: The Federal Aviation Administration (FAA) announces that it is reviewing a proposed noise compatibility program that was submitted for Port Columbus International Airport under the provisions of Title I of the Aviation Safety and Noise Abatement Act of 1979

(Pub. L. 96–193) (hereinafter referred to as ''the Act'') and 14 CFR part 150 of the Columbus Municipal Airport Authority. This program was submitted subsequent to a determination by the FAA that associated noise exposure maps submitted under 14 CFR part 150 for Port Columbus International Airport were in compliance with applicable requirements effective January 3, 2000. The proposed noise compatibility program will be approved or disapproved on or before January 10, 2001.

EFFECTIVE DATE: The effective date of the start of the FAA's review of the noise compatibility program is July 14, 2000. The public comment periods ends September 12, 2000.

FOR FURTHER INFORMATION CONTACT: Mary Jagiello, Federal Aviation Administration, Great Lakes Region, Detroit Airports District Office, DET ADO–670.1, Willow Run Airport, East, 8820 Beck Road, Belleville, Michigan 48111, (734) 487–7296. Comments on the proposed noise compatibility program should also be submitted to the above office.

SUPPLEMENTARY INFORMATION: This notice announces that the FAA is reviewing a proposed noise compatibility program for Port Columbus International Airport, which will be approved or disapproved on or before January 10, 2001. This is notice also announces the availability of this program for public review and comment.

An airport operator who has submitted noise exposure maps that are found by the FAA to be in compliance with the requirements of Federal Aviation Regulations (FAR) part 150, promulgated pursuant to Title I of the Act, may submit a noise compatibility program for FAA approval which sets forth the measures the operator has taken or proposes for the reduction of existing non-compatible uses and for the prevention of the introduction of additional non-compatible uses.

The FAA has formally received the noise compatibility program for Port Columbus International Airport, effective on July 14, 2000. It was requested that the FAA review this material and that the noise mitigation measures, to be implemented jointly by the airport and surrounding communities, be approved as a noise compatibility program under section 104(b) of the Act. Preliminary review of the submitted material indicates that it conforms to the requirements for the submittal of noise compatibility programs, but that further review will be necessary prior to approval or disapproval of the program. The formal review period, limited by law to a maximum of 180 days, will be completed on or before January 10, 2001.

The FAA's detailed evaluation will be conducted under the provisions of 14 CFR part 150, §150.33. The primary considerations in the evaluation process are whether the proposed measures may reduce the level of aviation safety, create an undue burden on interstate or foreign commerce, or be reasonably consistent with obtaining the goal of reducing existing non-compatible land uses and preventing the introduction of additional non-compatible land uses. Interested persons are invited to comment on the proposed program with specific reference to these factors. All comments, other than those properly addressed to local land use authorities, will be considered by the FAA to the extent practicable. Copies of the noise exposure maps, the FAA's evaluation of the maps, and the proposed noise compatibility program are available for examination at the following locations:

Federal Aviation Administration, 800 Independence Avenue, SW., Room 617, Washington, DC 20591

Federal Aviation Administration, Great Lakes Region, Airports Division Office, 2300 East Devon Avenue, Room 261, Des Plaines, Illinois 60018

Federal Aviation Administration, Detroit Airports District Office, Willow Run Airport, East, 8820 Beck Road, Belleville, Michigan 48111

Columbus Municipal Airport Authority, Port Columbus International Airport, Columbus, Ohio 43219

Questions may be directed to the individual named above under the heading, **FOR FURTHER INFORMATION CONTACT**.

Issued in Belleville, Michigan, July 14, 2000.

James M. Opatrny,

Acting Manager, Detroit Airports District Office, Great Lakes Region.

[FR Doc. 00–20278 Filed 8–9–00; 8:45 am]

BILLING CODE 4910–13–M

DEPARTMENT OF TRANSPORTATION

Federal Aviation Administration

Notice of Intent To Rule on Application (00–06–C–00–COS) To Impose and Use the Revenue From a Passenger Facility Charge (PFC) at Colorado Springs Airport, Submitted by the City of Colorado Springs, Colorado Springs, CO

AGENCY: Federal Aviation Administration (FAA), DOT.

ACTION: Notice of intent to rule on application.

SUMMARY: The FAA proposes to rule and invites public comment on the application to impose and use PFC revenue at Colorado Springs Airport under the provisions of 49 U.S.C. 40117 and part 158 of the Federal Aviation Regulations (14 CFR part 158).

DATES: Comments must be received on or before September 11, 2000.

ADDRESSES: Comments on this application may be mailed or delivered in triplicate to the FAA at the following address: Mr. Alan E. Wiechmann, Manager; Denver Airports District Office, DEN–ADO, Federal Aviation Administration; 26805 East 68th Avenue, Suite 224, Denver, Colorado 80249. In addition, one copy of any comments submitted to the FAA must be mailed or delivered to Mr. Gary W. Green, A.A.E., Director of Aviation, at the following address: 7770 Drennan Road, Colorado Springs, Colorado 80916.

Air Carriers and foreign air carriers may submit copies of written comments previously provided to Colorado Springs Airport, under § 158.23 of part 158.

FOR FURTHER INFORMATION CONTACT: Mr. Christopher J. Schaffer, (303) 342–1258, 26805 East 68th Avenue, Suite 224, Denver, Colorado 80249. The application may be reviewed in person at this same location.

SUPPLEMENTARY INFORMATION: The FAA proposes to rule and invites public comment on the application 00–06–C–00–COS to impose and use PFC revenue at Colorado Springs Airport, under the provisions of 49 U.S.C. 40117 and part 158 of the Federal Aviation Regulations (14 CFR part 158).

On August 2, 2000, the FAA determined that the application to impose and use the revenue from a PFC submitted by the City of Colorado Springs, Colorado Springs, Colorado, was substantially complete within the requirements of § 158.25 of part 158. The FAA will approve or disapprove the application, in whole or in part, no later than November 3, 2000.

The following is a brief overview of the application.

Level of the proposed PFC: $3.00.

Proposed charge effective date: January 1, 2001.

Proposed charge expiration date: May 1, 2003.

Total requested for use approval: $7,113,810.

Brief description of proposed project: Sand Creek Improvements, Rehabilitate Runway 17/35, Complete Taxiway ''H'',

East (Terminal) Unit Connector, Construct Ground Service Equipment (GSE) Apron on East Side of the East Terminal Unit.

Class or classes of air carriers which the public agency has requested not be required to collect PFC's: None.

Any person may inspect the application in person at the FAA office listed above under **FOR FURTHER INFORMATION CONTACT** and at the FAA Regional Airports Office located at: Federal Aviation Administration, Northwest Mountain Region, Airports Division, ANM–600, 1601 Lind Avenue SW., Suite 315, Renton, WA 98055–4056.

In addition, any person may, upon request, inspect the application, notice and other documents germane to the application in person at the Colorado Springs Airport.

Issued in Renton, Washington on August 2, 2000.

David A. Field,

Manager, Planning, Programming and Capacity Branch, Northwest Mountain Region.

[FR Doc. 00–20279 Filed 8–9–00; 8:45 am]

BILLING CODE 4910–13–M

DEPARTMENT OF TRANSPORTATION

Federal Highway Administration

Environmental Impact Statement: Williams, Mountrail, and Ward Counties, ND

AGENCY: Federal Highway Administration (FHWA), DOT.

ACTION: Notice of Intent.

SUMMARY: The FHWA is issuing this notice to advise the public that an environmental impact statement will be prepared for a proposed highway project in Williams, Mountrail, and Ward Counties of North Dakota.

FOR FURTHER INFORMATION CONTACT: Mr. J. Michael Bowen, Division Administrator, Federal Highway Administration, 1471 Interstate Loop, Bismarck, North Dakota 58503, Telephone: (701) 250–4204.

SUPPLEMENTARY INFORMATION: The FHWA, in cooperating with the North Dakota Department of Transportation, will prepare an environmental impact statement (EIS) on a proposal to improve U.S. Highway 2 (US 2) in Williams, Mountrail, and Ward Counties of North Dakota. The proposed improvement would involve the four-laning of US 2 from junction US 85 (milepost 32.4), north of Williston, to junction US 52 (milepost 131.3), west of Minot, a distance of nearly one hundred miles. The proposed improvement would require the construction of an additional two-lane roadway adjacent to the present two-lane US 2.

The proposed improvements for four-laning U.S. Highway 2 are based on the public requests established by the repeated ongoing and historic formal and informal communication from local and regional civic and business groups. The completion of this four-lane facility will provide a consistent National Highway System Designated transportation system through the northern portion of North Dakota, with a primary benefit of enhanced economic development opportunities. Alternatives under consideration include: (1) Taking no action; (2) add two lanes to the south of the existing US 2; (3) add two lanes to the north of the existing US 2; (4) selectively add two lanes to the north or the south through the existing corridor; and (5) obliterate the existing US 2 and align the new four-lane section within the existing corridor.

Letters describing the proposed action and soliciting views and comments will be sent to various Federal, State and Local agencies and to private organizations and citizens who have previously expressed or are known to have interest in this proposal. A series of public meetings will be held in the US 2 area between August and December 2000 to solicit both oral and written comments from interested parties. Public notice will be given for the time and place of the public meetings. Project scoping will be completed in conjunction with the public meetings and the solicitation of views.

A draft EIS will be prepared based upon the project scoping. The draft EIS will be available for agency and public review and comment. In addition, a public hearing will be held following completion of the draft EIS. Public notice will be given for the time and place of the public hearing for the draft EIS.

To ensure that the full range of issues related to this proposed action are addressed and all significant issues are identified, comments and suggestions are invited from all interested parties. Comments or questions concerning this proposed action and the EIS should be directed to the FHWA at the address provided above.

(Catalog of Federal Domestic Assistance Program Number 20.205, Highway Planning and Construction. The regulations implementing Executive Order 12372 regarding intergovernmental consultation on federal programs and activities apply to this program.)

Issued on: July 14, 2000.

William M. Brownell,

Assistant Division Administrator, Federal Highway Administration, Bismarck, North Dakota 58503.

[FR Doc. 00–20317 Filed 8–9–00; 8:45 am]

BILLING CODE 4910–22–M

DEPARTMENT OF TRANSPORTATION

Surface Transportation Board

Release of Waybill Data

The Surface Transportation Board has received a request from Harkins Cunningham on behalf of Canadian National Railway Company (WB525–7–28–2000), for permission to use certain data from the Board's Carload Waybill Samples. A copy of the requests may be obtained from the Office of Economics, Environmental Analysis, and Administration.

The waybill sample contains confidential railroad and shipper data; therefore, if any parties object to these requests, they should file their objections with the Director of the Board's Office of Economics, Environmental Analysis, and Administration within 14 calendar days of the date of this notice. The rules for release of waybill data are codified at 49 CFR 1244.9.

Contact: James A. Nash, (202) 565–1542.

Vernon A. Williams,

Secretary.

[FR Doc. 00–20321 Filed 8–9–00; 8:45 am]

BILLING CODE 4915–00–P

DEPARTMENT OF TRANSPORTATION

Surface Transportation Board

[STB Docket No. AB–33 (Sub–No. 156)]

Union Pacific Railroad Company—Abandonment—in Harris, Fort Bend, Austin, Wharton and Colorado Counties, TX

On July 21, 2000, Union Pacific Railroad Company (UP) filed with the Surface Transportation Board (Board) an application for permission to abandon a line of railroad known as the Bellaire Subdivision, extending from milepost 3.48 [1] near Bellaire Junction in Houston,

[1] A typographical error appears in documents previously filed in this proceeding, including the notice of intent, where the numerals 4 and 8 in the beginning milepost designation are transposed, indicating the milepost as 3.84, rather than 3.48, thereby omitting a 0.36-mile segment of the line. The correct milepost designation and length of the line appear in the line description of UP's system

Continued

to milepost 52.9 near Chesterville, a distance of 49.42 miles, in Harris, Fort Bend, Austin, Wharton and Colorado Counties, TX. The line includes the stations of Bellaire Junction (milepost 6.2), Bellaire Team (milepost 7.3), Jeannetta (milepost 10.9), West Park (milepost 13.4), Alief (milepost 15.0), Quality (milepost 17.0), Clodine (milepost 21.6), Fulshear (milepost 33.4), Simonton (milepost 38.4), and Wallis (milepost 44.8), and traverses U.S. Postal Service ZIP Codes 77005, 77006, 77027, 77036, 77042, 77056, 77057, 77063, 77072, 77081, 77082, 77083, 77098, 77401, 77423, 77434, 77435, 77441, 77450, 77469, 77476, 77485, and 77494.

The line does not contain federally granted rights-of-way. Any documentation in UP's possession will be made available promptly to those requesting it. The applicant's entire case for abandonment (case-in-chief) was filed with the application.

The line of railroad has appeared on UP's system diagram map or has been included in its narrative in category 1 since April 1, 2000.

The interest of railroad employees will be protected by *Oregon Short Line R. Co.—Abandonment—Goshen,* 360 I.C.C. 91 (1979).

Any interested person may file with the Board written comments concerning the proposed abandonment or protests (including the protestant's entire opposition case), by September 5, 2000. All interested persons should be aware that, following any abandonment of rail service and salvage of the line, the line may be suitable for other public use, including interim trail use. Any request for a public use condition under 49 U.S.C. 10905 (49 CFR 1152.28) or for a trail use condition under 16 U.S.C. 1247(d) (49 CFR 1152.29) must be filed by September 5, 2000. Each trail use request must be accompanied by a $150 filing fee. *See* 49 CFR 1002.2(f)(27).

Applicant's reply to any opposition statements and its response to trail use requests must be filed by September 19, 2000. *See* 49 CFR 1152.26(a).

Persons opposing the abandonment that wish to participate actively and fully in the process should file a protest. Persons who may oppose the abandonment but who do not wish to participate fully in the process by submitting verified statements of witnesses containing detailed evidence should file comments. Persons seeking information concerning the filing of protests should refer to 49 CFR 1152.25. Persons interested only in seeking public use or trail use conditions should also file comments.

In addition, a commenting party or protestant may provide:

(i) An offer of financial assistance (OFA) for continued rail service under 49 U.S.C. 10904 (due 120 days after the application is filed or 10 days after the application is granted by the Board, whichever occurs sooner);

(ii) Recommended provisions for protection of the interests of employees;

(iii) A request for a public use condition under 49 U.S.C. 10905; and

(iv) A statement pertaining to prospective use of the right-of-way for interim trail use and rail banking under 16 U.S.C. 1247(d) and 49 CFR 1152.29.

All filings in response to this notice must indicate the proceeding designation STB Docket No. AB–33 (Sub-No. 156) and must be sent to: (1) Surface Transportation Board, Office of the Secretary, Case Control Unit, 1925 K Street, N.W., Washington, DC 20423–0001; and (2) James P. Gatlin, 1416 Dodge Street, #830, Omaha, NE 68179. The original and 10 copies of all comments or protests shall be filed with the Board with a certificate of service. Except as otherwise set forth in part 1152, every document filed with the Board must be served on all parties to the abandonment proceeding. 49 CFR 1104.12(a).

The line sought to be abandoned will be available for subsidy or sale for continued rail use, if the Board decides to permit the abandonment in accordance with applicable laws and regulations (49 U.S.C. 10904 and 49 CFR 1152.27). Each OFA must be accompanied by a $1,000 filing fee. *See* 49 CFR 1002.2(f)(25). No subsidy arrangement approved under 49 U.S.C. 10904 shall remain in effect for more than 1 year unless otherwise mutually agreed by the parties (49 U.S.C. 10904(f)(4)(B)). Applicant will promptly provide upon request to each interested party an estimate of the subsidy and minimum purchase price required to keep the line in operation. The carrier's representative to whom inquiries may be made concerning sale or subsidy terms is set forth above.

Persons seeking further information concerning abandonment procedures may contact the Board's Office of Public Services at (202) 565–1592 or refer to the full abandonment regulations at 49 CFR part 1152. Questions concerning environmental issues may be directed to the Board's Section of Environmental Analysis (SEA) at (202) 565–1545. [TDD for the hearing impaired is available at 1–800–877–8339.]

An environmental assessment (EA) (or environmental impact statement (EIS), if necessary) prepared by SEA will be served upon all parties of record and upon any agencies or other persons who commented during its preparation. Other interested persons may contact SEA to obtain a copy of the EA (or EIS). EAs in abandonment proceedings normally will be made available within 33 days of the filing of the application. The deadline for submission of comments on the EA will generally be within 30 days of its service. The comments received will be addressed in the Board's decision. A supplemental EA or EIS may be issued where appropriate.

Board decisions and notices are available on our website at ''WWW.STB.DOT.GOV.''

Decided: August 2, 2000.

By the Board, David M. Konschnik, Director, Office of Proceedings.

Vernon A. Williams,

Secretary.

[FR Doc. 00–19996 Filed 8–9–00; 8:45 am]

BILLING CODE 4915–00–P

---

diagram map. The shippers on the line are not located near the omitted segment and are unaffected by the error. The cost and revenue data submitted with the application include this 0.36-mile segment. The typographical error is *de minimis* and fair notice of the scope of the application has been given.

Corrections

Federal Register

Vol. 65, No. 155

Thursday August 10, 2000

This section of the FEDERAL REGISTER contains editorial corrections of previously published Presidential, Rule, Proposed Rule, and Notice documents. These corrections are prepared by the Office of the Federal Register. Agency prepared corrections are issued as signed documents and appear in the appropriate document categories elsewhere in the issue.

DEPARTMENT OF HEALTH AND HUMAN SERVICES

42 CFR Part 59

RIN: 0940-AA00

Standards of Compliance for Abortion-Related Services in Family Planning Services Projects

Correction

In rule document 00–16758 beginning on page 41270 in the issue of Monday, July 3, 2000, make the following corrections:

§59.1 [Corrected]

1. On page 41278, second column, fourth line, ''(42 U.S.C.3200)'' should read ''(42 U.S.C. 300)''.

§59.2 [Corrected].

2. On the same page, third column, sixth line of the definition *State*, ''outlaying'' should read ''outlying''.

3. On the same page, third column, seventh line of the definition *State*, ''Wage'' should read ''Wake''.

§59.5 [Corrected]

4. On page 41279, first column, sixth line of paragraph (a)(1), ''participated'' should read ''participate''.

5. On page 41279, first column, first line of paragraph (a)(4), ''of'' should read ''to''.

6. On the same page, first column, fourth line of paragraph (a)(4), ''martial'' should read ''marital''.

7. On the same page, first column, first line of paragraph (a)(5), insert ''as'' in front of ''a''.

8. On the same page, first column, second line of paragraph (a)(5)(i), insert ''be'' in front of ''provided''.

§59.12 [Corrected]

9. On page 41280, third column, sixth line, ''orb'' should read ''or''.

[FR Doc. C0–16758 Filed 8–9–00; 8:45 am]

BILLING CODE 1505–01–D

Federal Register

Thursday,
August 10, 2000

Part II

Environmental Protection Agency

40 CFR Parts 9, 122, 123, et al.

National Pollutant Discharge Elimination System; Cooling Water Intake Structures for New Facilities; Proposed Rules

ENVIRONMENTAL PROTECTION AGENCY

40 CFR Parts 9, 122, 123, 124, and 125

[FRL–6843–5]

RIN 2040–AC23

National Pollutant Discharge Elimination System—Regulations Addressing Cooling Water Intake Structures for New Facilities

AGENCY: Environmental Protection Agency (EPA).

ACTION: Proposed rule.

SUMMARY: Today's proposed rule would implement section 316(b) of the Clean Water Act (CWA) for new facilities that use water withdrawn from rivers, streams, lakes, reservoirs, estuaries, oceans or other waters of the U.S. for cooling water purposes. The proposed rule would establish national requirements applicable to the location, design, construction, and capacity of cooling water intake structures at new facilities. The proposed national requirements would minimize the adverse environmental impact associated with the use of these structures.

Today's proposed rule would establish location, design, construction, and capacity requirements that reflect the best technology available for minimizing adverse environmental impact from the cooling water intake structure based on the placement of the intake structure and the water body type. The Environmental Protection Agency (EPA) proposes to group surface water into four categories—freshwater rivers and streams, lakes and reservoirs, estuaries and tidal rivers, and oceans—and to establish requirements for cooling water intake structures located in each water body type. In general, the closer the intake structure is to areas that are most sensitive or biologically productive, the more stringent the requirements proposed to minimize adverse environmental impact. Under this proposal, EPA would set performance requirements and would not mandate the use of specific technologies.

EPA expects that this proposed regulation would reduce impingement and entrainment at new facilities over the next 20 years. Today's proposed rule would establish requirements that would help preserve ecosystems in close proximity to cooling water intake structures at new facilities. EPA has considered the potential benefits of the proposal and the preamble discusses them in qualitative terms. Expected benefits include a decrease in expected mortality or injury to aquatic organisms that would otherwise be subject to entrainment into cooling water systems or impingement against screens or other devices at the entrance of cooling water intake structures. The proposed regulatory requirements also could reduce adverse impact on threatened and endangered species.

DATES: Comments on this proposed rule and Information Collection Request (ICR) must be received or postmarked on or before midnight October 10, 2000.

ADDRESSES: Public comments regarding this proposed rule should be submitted by mail to: Cooling Water Intake Structure (New Facilities) Proposed Rule Comment Clerk—W–00–03, Water Docket, Mail Code 4101, EPA, Ariel Rios Building, 1200 Pennsylvania Avenue, NW., Washington, DC 20460. Comments delivered in person (including overnight mail) should be submitted to the Cooling Water Intake Structure (New Facilities) Proposed Rule Comment Clerk—W–00–03, Water Docket, Room EB 57, 401 M Street, SW., Washington, DC 20460. You also may submit comments electronically to *ow-docket@epa.gov.* Please submit any references cited in your comments. Please submit an original and three copies of your written comments and enclosures. For additional information on how to submit comments, see ''**SUPPLEMENTARY INFORMATION,** How May I Submit Comments?''

EPA has prepared an ICR for this proposed rule (EPA ICR number 1973.01). For further information or a copy of the ICR contact Sandy Farmer by phone at (202)260–2740, e-mail at farmer.sandy@epamail.epa.gov or download off the internet at http://www.epa.gov/icr. Send comments on the Agency's need for this information, the accuracy of the burden estimates, and any suggested methods for minimizing respondent burden (including the use of automated collection techniques) to the following addresses. Please refer to EPA ICR No. 1973.01 in any correspondence.

Ms. Sandy Farmer, U.S. Environmental Protection Agency, OP Regulatory Information Division (2137), 401 M Street, SW., Washington, DC 20460 and

Office of Information and Regulatory Affairs, Office of Management and Budget, Attention: Desk Officer for EPA, 725 17th Street, NW., Washington, DC 20503.

FOR FURTHER INFORMATION CONTACT: For additional technical information contact Deborah G. Nagle at (202) 260–2656 or James T. Morgan at (202) 260–6015. For additional economic information contact Lynne Tudor at (202) 260–5834. The e-mail address for the above contacts is ''rule.316b@epa.gov.''

SUPPLEMENTARY INFORMATION:

What Entities Are Potentially Regulated by This Action?

This proposed rule would apply to new facilities that use cooling water intake structures to withdraw water from waters of the U.S. and that have or require a National Pollutant Discharge Elimination System (NPDES) permit issued under section 402 of the CWA. New facilities subject to this regulation would include those with a design intake flow of greater than two (2) million gallons per day (MGD). If a new facility meets these conditions, it is subject to today's proposed regulations. If a new facility has or requires an NPDES permit but does not meet the 2 MGD intake flow threshold, it would be subject to permit conditions implementing section 316(b) on a case-by-case basis, using best professional judgment. This proposal defines the term ''cooling water intake structure'' to mean the total physical structure and any associated constructed waterways used to withdraw water from waters of the U.S., provided that at least twenty-five (25) percent of the water withdrawn is used for cooling purposes. Generally, facilities that meet these criteria fall into two major groups: new steam electric generating facilities and new manufacturing facilities.

The following table lists the types of entities that are potentially subject to this proposed rule. This table is not intended to be exhaustive, but rather provides a guide for readers regarding entities likely to be regulated by this action. This table lists the types of entities that EPA is now aware that could potentially be regulated by this action; other types of entities not listed in the table could also be regulated. To determine whether your facility would be regulated by this action, you should carefully examine the applicability criteria proposed at § 125.81 of the rule. If you have questions regarding the applicability of this action to a particular entity, consult one of the persons listed for technical information in the preceding **FOR FURTHER INFORMATION CONTACT** section.

Category	Examples of regulated entities	Standard Industrial Classification Codes	North American Industry Code (NAIC)
Federal, State and local government.	Operators of steam electric generating point source dischargers that employ cooling water intake structures.	4911 and 493	221111, 221112, 221113, 221119, 221121, 221122, 221111, 221112, 221113, 221119, 221121, 221122.
Industry	Operators of industrial point source dischargers that employ cooling water intake structures.	See below	See below.
	Steam electric generating	4911 and 493	221111, 221112, 221113, 221119, 221121, 221122, 221111, 221112, 221113, 221119, 221121, 221122.
	Agricultural production	0133	111991 11193.
	Metal mining	1011	21221.
	Oil and gas extraction	1311, 1321	211111, 211112.
	Mining and quarrying of nonmetallic minerals	1474	212391.
	Food and kindred products	2046, 2061, 2062, 2063, 2075, 2085.	311221, 311311, 311312, 311313, 311222, 311225, 31214.
	Tobacco products	2141	312229, 31221.
	Textile mill products	2211	31321.
	Lumber and wood products, except furniture	2415, 2421, 2436, 2493	321912, 321113, 321918, 321999, 321212, 321219.
	Paper and allied products	2611, 2621, 2631, 2676	3221, 322121, 32213, 322121, 322122, 32213, 322291.
	Chemical and allied products	28 (except 2895, 2893, 2851, and 2879).	325 (except 325182, 32591, 32551, 32532).
	Petroleum refining and related industries	2911, 2999	32411, 324199.
	Rubber and miscellaneous plastics products	3011, 3069	326211, 31332, 326192, 326299.
	Stone, clay, glass, and concrete products	3241	32731.
	Primary metal industries	3312, 3313, 3315, 3316, 3317, 3334, 3339, 3353, 3363, 3365, 3366.	324199, 331111, 331112, 331492, 331222, 332618, 331221, 22121, 331312, 331419, 331315, 331521, 331524, 331525.
	Fabricated metal products, except machinery and transportation equipment.	3421, 3499	332211, 337215, 332117, 332439, 33251, 332919, 339914, 332999.
	Industrial and commercial machinery and computer equipment.	3523, 3531	333111, 332323, 332212, 333922, 22651, 333923, 33312.
	Transportation equipment	3724, 3743, 3764	336412, 333911, 33651, 336416.
	Measuring, analyzing, and controlling instruments; photographic, medical, and optical goods; watches and clocks.	3861	333315, 325992.
	Electric, gas, and sanitary services	4911, 4931, 4939, 4961	221111, 221112, 221113, 221119, 221121, 221122, 22121, 22133.
	Educational services	8221	61131.

How May I Review the Public Record?

The record (including supporting documentation) for this proposed rule is filed under docket number W–00–03 (proposed rule). The record is available for inspection from 9 a.m. to 4 p.m. on Monday through Friday, excluding legal holidays, at the Water Docket, Room EB 57, USEPA Headquarters, 401 M Street, SW, Washington, DC 20460. For access to docket materials, please call (202)260–3027 to schedule an appointment during the hours of operation stated above.

How May I Submit Comments?

To ensure that EPA can read, understand, and therefore properly respond to comments, the Agency requests that you cite, where possible, the paragraph(s) or sections in the preamble, rule, or supporting documents to which each comment refers. You should use a separate paragraph for each issue you discuss.

If you want EPA to acknowledge receipt of your comments, enclose a self-addressed, stamped envelope. No faxes will be accepted. Electronic comments must be submitted as a WordPerfect 5.1, 6.1, or 8 format, or an ASCII file or file avoiding the use of special characters and forms of encryption. Electronic comments must be identified by the docket number W–00–03. EPA will accept comments and data on disks in WordPerfect 5.1, 6.1, or 8 format or in ASCII file format. Electronic comments on this notice may be filed on-line at many Federal depository libraries.

Cooling Water Intake Structures: Section 316(b) New Facility Draft Preamble and Proposed Rule

Table of Contents

I. Legal Authority
II. Purpose and Summary of Proposed Regulation

A. What Is the Purpose of Today's Proposed Regulation?
B. What Requirements Would Today's Proposed Regulation Establish?
C. How Does Today's Proposed Regulation Affect New Facilities Built Before Today's Proposal Is Finalized and Existing Facilities Subject to Section 316(b)?
III. Legal Background
A. The Clean Water Act
B. What Is Required Under Section 316 of the Clean Water Act?
IV. History
A. Have Prior EPA Regulations Addressed Cooling Water Intake Structures?
B. How is Section 316(b) of the CWA Being Implemented Now?
V. Scope and Applicability of the Proposed Rule
A. Who Is Covered Under This Proposed Rule?
B. What Is a ''New Facility''?
C. What Is a ''Cooling Water Intake Structure''?
D. Must My Facility Withdraw Water from Waters of the U.S.?
E. Must My Facility Have a Point Source Discharge Subject to an NPDES Permit?
VI. Data Collection and Overview of Industries Potentially Subject to Proposed Rule
A. Overview
B. New Steam Electric Generating Facilities
C. New Manufacturing Facilities
VII. Environmental Impact Associated with Cooling Water Intake Structure
A. Overview
B. What Types of Environmental Impacts Are Caused by Cooling Water Intake Structures?
C. What Entrainment and Impingement Impacts Caused by Cooling Water Intake Structures Have Been Documented?
D. What Constitutes Adverse Environmental Impact Under This Proposed Rule?
VIII. Best Technology Available for Minimizing Adverse Environmental Impact at New Facilities
A. What Is the Best Technology Available for Minimizing Adverse Environmental Impact at New Facilities?
1. What Are the Proposed and Alternative Regulatory Frameworks for Today's Proposed Rule?
2. Location
3. Flow and Volume
4. Velocity
5. Additional Design and Construction Technologies
6. What is the Role of Restoration Measures?
7. Additional and Alternative BTA Requirements
8. Other Approaches Being Considered by EPA
B. What Technologies Can Be Used to Meet the Regulatory Requirements?
1. Intake Screen Systems
2. Passive Intake Systems (Physical Exclusion Devices)
3. Diversion or Avoidance Systems
4. Fish-Handling Systems and Other Technologies
C. How Is Cost Being Considered in Establishing BTA for New Facilities?
IX. Implementation
A. What Information Must I Submit to the Director When I Apply for My New or Reissued NPDES Permit?
1. Source Water Baseline Biological Characterization Data
2. Source Water Physical Data
3. Cooling Water Intake Structure Velocity and Flow Data
4. Data to Show Compliance with the Flow Requirements, Velocity Requirement, Flow Reduction Requirement, and Additional Design and Construction Technology Requirement
5. Data to Support A Request for Alternative Requirements
B. How Would the Director Determine the Appropriate Cooling Water Intake Structure Requirements?
C. What Would I Be Required to Monitor?
D. How Would Compliance Be Determined?
E. What Are the Respective Federal, State, and Tribal Roles?
F. Are Permits for New Facilities Subject to Requirements Under Other Federal Statutes?
X. Cost/Benefit Analysis
A. Cost
1. Electric Generation Sector
2. Manufacturing Sector
3. Cost Impacts
4. Cost Impacts of Other Alternatives
B. Discussion of Cooling Water Intake Structure Impacts and Potential Benefits
XI. Administrative Requirements
A. Paperwork Reduction Act
B. Unfunded Mandates Reform Act
C. Regulatory Flexibility Act (RFA) as Amended by the Small Business Regulatory Enforcement Fairness Act of 1996 (SBREFA), 5 U.S.C. 601 *et seq.*
1. Electric Generation Sector
2. Manufacturing Sector
D. Executive Order 12866: Regulatory Planning and Review
E. Executive Order 13132: Federalism
F. Executive Order 12898: Federal Actions to Address Environmental Justice in Minority Populations and Low-Income Populations
G. Executive Order 13045: Protection of Children from Environmental Health Risks and Safety Risks
H. Executive Order 13084: Consultation and Coordination With Indian Tribal Governments
I. National Technology Transfer and Advancement Act
J. Plain Language Directive
K. Executive Order 13158: Marine Protected Areas
XII. Solicitation of Comments and Data
A. Specific Solicitation of Comment and Data
B. General Solicitation of Comment

I. Legal Authority

Today's proposed rule is issued under the authority of sections 301, 306, 308, 316, 402, and 501 of the Clean Water Act (CWA), 33 U.S.C. 1311, 1316, 1318, 1326, 1342, and 1361. This proposal partially fulfills the obligations of the U.S. Environmental Protection Agency (EPA) under a Consent Decree in *Cronin* v. *Browner*, United States District Court, Southern District of New York, No. 93 Civ 0314 (AGS).

II. Purpose and Summary of Proposed Regulation

A. What Is the Purpose of Today's Proposed Regulation?

Section 316(b) of the CWA provides that any standard established pursuant to section 301 or 306 of the CWA and applicable to a point source must require that the location, design, construction, and capacity of cooling water intake structures reflect the best technology available for minimizing adverse environmental impact. Today's proposal would define a cooling water intake structure as the total physical structure and any associated constructed waterways used to withdraw water from waters of the U.S., provided that at least twenty-five (25) percent of the water withdrawn is used for cooling purposes. Cooling water absorbs waste heat rejected from processes employed or from auxiliary operations on a facility's premises. Single cooling water intake structures might have multiple intake bays. Today's proposed rule would establish requirements applicable to the location, design, construction, and capacity of cooling water intake structures at new facilities. The proposal seeks to minimize the adverse environmental impact associated with the use of these structures.

Today's proposed rule partially fulfills EPA's obligation to comply with a Consent Decree entered in the United States District Court, Southern District of New York in *Cronin* v. *Browner,* No. 93 Civ. 0314 (AGS), a case brought against EPA by a coalition of individuals and environmental groups. The Consent Decree as entered on October 10, 1995, provided that EPA propose regulations implementing section 316(b) by July 2, 1999, and take final action with respect to those regulations by August 13, 2001. EPA later moved to amend the Consent Decree by bifurcating the rule into two phases—Phase I addressing new facilities and Phase II addressing existing facilities—and extending the deadlines for proposal and final action. Plaintiffs opposed EPA's motion for an extension of the deadlines. On March 27, 2000, the Court amended the Consent Decree to provide among other things that EPA propose regulations addressing new facilities on or before July 20, 2000, and propose regulations addressing existing facilities on or before July 20, 2001. The Court declined

to specify deadlines for final action with respect to regulations addressing new and existing facilities, stating that the parties should attempt to reach an agreement with respect to the deadlines in the Consent Decree. Today's proposal fulfills EPA's obligation under the Consent Decree to propose regulations addressing new facilities.

This proposed rule would apply to new facilities that use cooling water intake structures to withdraw water from waters of the U.S. and that have or require a National Pollutant Discharge Elimination System (NPDES) permit issued under section 402 of the CWA. New facilities subject to this proposed regulation would be those with a design intake flow of greater than two (2) million gallons per day (MGD).

If a new facility has or requires an NPDES permit and meets the 2 MGD flow threshold, it is subject to today's proposed regulations. The proposal would define the term ''new facility'' as any building, structure, facility, or installation that meets the definition of ''new source'' or ''new discharger'' in 40 CFR 122.2 and 122.29(b)(1), (2), and (4); commences construction after the effective date of this rule; and has a new or modified cooling water intake structure that withdraws cooling water from waters of the U.S.

Today's proposal would add language to EPA's NPDES permitting regulations at 40 CFR part 125, subpart I that establishes requirements applicable to cooling water intake structures for new facilities, and would reserve 40 CFR part 125, subpart J for requirements addressing existing facilities. Today's proposal also would amend EPA's regulations at 40 CFR 122.44(b)(3) to require the inclusion in EPA-issued NPDES permits of requirements applicable to cooling water intake structures at new facilities, in accordance with part 125, subpart I and would amend EPA's regulations establishing requirements for authorized State NPDES programs by reinstating references to 40 CFR part 125, subparts I and J in 40 CFR 123.25(a)(36). This would have the effect of mandating that States have legal authority to implement final regulations addressing cooling water intake structures at new and existing facilities. Subpart I currently reads in its entirety, ''Criteria Applicable to Cooling Water Intake Structures Under section 316(b) of the Act [Reserved].'' Subpart J currently reads in its entirety, ''Reserved.'' References to part 125, subparts I and J were included in § 123.25(a)(36) for many years. Recently, however, EPA's *Amendments to Streamline the National Pollutant Discharge Elimination System Program Regulations: Round Two* deleted the references to subparts I and J from 40 CFR 123.25(a)(36) along other with references to reserved subparts. 65 FR 30886, 30910 (May 15, 2000). Today's proposal would reinsert those references in light of the pending rulemaking proceedings addressing cooling water structures at new and existing facilities.

Proposed section 125.80(c) makes clear that nothing in today's proposal would preclude or deny the authority of States, their political subdivisions, and interstate agencies under section 510 of the CWA. States retain authority under section 510 to adopt or enforce any requirement respecting the control or abatement of pollution that is more stringent than the minimum requirements established in a final rule based on this proposal. Section 502(19) of the CWA defines ''pollution'' as including the man-made or man-induced alteration of the physical and biological integrity of water.

Today's proposed rule would also add proposed regulatory language at 40 CFR 122.2(q) to require that the information required under proposed § 125.86 regarding cooling water intake structure information and requests for alternative requirements under proposed § 125.85 be submitted at the time of permit application. Finally, EPA proposes to amend the public notification requirements at 40 CFR 124.10(d)(1) to require notification that a permit applicant is subject to the cooling water intake structure requirements of part 125 subpart I.

B. What Requirements Would Today's Proposed Regulation Establish?

At § 125.84(a)–(e), today's proposed rule would establish national performance requirements for the location, design, construction, and capacity of cooling water intake structures at new facilities to minimize adverse environmental impact. Under the proposed rule, EPA would establish minimum national location, design, construction, and capacity requirements for minimizing adverse environmental impact from cooling water intake structures based on the placement of the intake structure and the water body type. EPA has grouped surface waters into four categories and is proposing separate requirements for cooling water intake structures in each category. These categories are based on the location of a facility's cooling water intake structure on or within (1) a freshwater river or stream, (2) a lake or reservoir, (3) an estuary or tidal river, or (4) an ocean. Proposed § 125.84(f) provides that in certain circumstances Directors may impose additional site-specific requirements when in their judgment the national requirements are not sufficient to ensure that adverse environmental impact will be minimized. Section 125.84(g) would require the Director to impose any more stringent requirements needed to ensure attainment of water quality standards. Finally, § 125.85 would allow any interested person to request that the Director impose alternative best technology available (BTA) requirements by demonstrating that compliance with the requirements would result in compliance costs wholly out of proportion to the costs EPA considered in establishing the national standards proposed at § 125.84(a)–(e). The term ''Director'' means the State or Tribal Director where there is an approved NPDES State or Tribal program and means the Regional Administrator where EPA administers the NPDES program in the State. See 40 CFR 122.2.

C. How Does Today's Proposed Regulation Affect New Facilities Built Before Today's Proposal Is Finalized and Existing Facilities Subject to Section 316(b)?

In 1977 EPA issued draft guidance for determining the best technology available to minimize adverse environmental impact from cooling water intake structures. In the absence of section 316(b) regulations or final guidance, the 1977 draft guidance has served as applicable guidance for section 316(b) determinations. See *Draft Guidance for Evaluating the Adverse Impact of Cooling Water Intake Structures on the Aquatic Environment: Section 316(b) P.L. 92–500* (U.S. EPA, 1977). Administrative determinations in several permit proceedings also have served as de facto guidance.

Today, EPA proposes a national framework that would establish certain minimum requirements for the design, capacity, and construction of cooling water intake structures for new facilities based on the location of a cooling water intake structure in four categories of water bodies. In doing so, the Agency is proposing to revise the approach adopted in the 1977 draft guidance which was based on the judgment that ''[t]he decision as to best technology available for intake design location, construction, and capacity must be made on a case-by-case basis.'' Other important differences from the 1977 draft Guidance include today's proposed definition of a ''cooling water intake structure'' for new facilities. Today's proposal also would establish a cost test that is different from the

''wholly disproportionate'' test that has been in use since the 1970s (see section VIII C).

Although EPA's judgment is that the requirements proposed today would best implement section 316(b) for new facilities, the Agency is also inviting comment on a broad array of other alternatives, including, for example, a framework under which Directors would continue to evaluate adverse environmental impact and determine the best technology available for minimizing such impact on a wholly site-specific basis. Because the Agency is inviting comment on such a broad range of alternatives for potential promulgation, today's proposal is not intended as guidance for determining the best technology available to minimize the adverse environmental impact of cooling water intake structures at new facilities before the Agency promulgates final regulations based on today's proposal. In the interim, Directors should continue to make section 316(b) determinations, which may be more or less stringent than today's proposal, on a case-by-case basis applying best professional judgment.

Today's proposal does not apply to existing facilities. Although EPA has not yet closely examined the costs of technology options at facilities, the Agency anticipates that existing facilities would have less flexibility in designing and locating their cooling water intake structures than new facilities and that existing facilities might incur higher costs to comply with the proposed requirements than new facilities would incur. For example, existing facilities might need to upgrade or modify existing intake structures and cooling water systems to meet today's proposed requirements, which might impose greater costs than use of the same technologies at a new facility. Retrofitting technologies at an existing facility might also require brief shutdown periods during which the facility would lose both production and revenues, and certain retrofits could decrease the thermal efficiency of an electric generating facility. Existing facilities also might have site limitations, such as lack of undeveloped space, that might make certain technologies infeasible. The Agency anticipates that at the time it promulgates final requirements for cooling water intake structures at new facilities, it will have made substantial progress in its analyses to support section 316(b) regulations for existing facilities employing cooling water intake structures. Upon promulgation of final regulations based on today's proposal, the Agency will address the extent to which the final new facility regulation and preamble should serve as guidance for developing section 316(b) requirements for existing facilities prior to the promulgation of the section 316(b) regulations for existing facilities.

III. Legal Background

A. The Clean Water Act

The Federal Water Pollution Control Act, also known as the Clean Water Act (CWA), seeks to ''restore and maintain the chemical, physical, and biological integrity of the nation's waters.'' 33 U.S.C. section 1251(a). The CWA establishes a comprehensive regulatory program, key elements of which are (1) a prohibition on the discharge of pollutants from point sources to waters of the U.S., except as authorized by the statute; (2) authority for EPA or authorized States or Tribes to issue NPDES permits that regulate the discharge of pollutants; and (3) requirements for EPA to develop effluent limitations guidelines and standards and for States to develop water quality standards that are the basis for the pollutant discharge limits imposed in NPDES permits.

Today's proposed rule implements section 316(b) of the CWA as it applies to new facilities. Section 316(b) addresses the adverse environmental impact caused by the intake of cooling water, not discharges into water. Despite this special focus, the requirements of section 316(b) are closely linked to several of the core elements of the NPDES permit program established under section 402 of the CWA to control discharges of pollutants into navigable waters. For example, section 316(b) applies to facilities that use a cooling water intake structure and have a point source discharge that is NPDES-permitted or requires an NPDES permit. Conditions implementing section 316(b) are included in NPDES permits and would continue to be included in NPDES permits under this proposed rule.

Section 301 of the CWA prohibits the discharge of any pollutant by any person, except in compliance with specified statutory requirements. These requirements include compliance with technology-based effluent limitations guidelines and new source performance standards, water quality standards, NPDES permit requirements, and certain other requirements.

Section 402 of the CWA provides authority for EPA or an authorized State or Tribe to issue an NPDES permit to any person discharging any pollutant from a point source into waters of the U.S. Forty-three States and one U.S. territory are authorized under section 402(b) to administer the NPDES permitting program. NPDES permits restrict the types and amounts of pollutants, including heat, that may be discharged from various industrial, commercial, and other sources of wastewater. These permits control the discharge of pollutants primarily through the imposition of effluent limitations and other permit conditions. Effluent limitations may be based on promulgated effluent limitations guidelines, new source performance standards, or the best professional judgment of the permit writer. Limitations based on these guidelines, standards, or best professional judgment are known as technology-based effluent limits. Where technology-based effluent limits are inadequate to ensure compliance with water quality standards applicable to the receiving water, more stringent effluent limits based on applicable water quality standards are imposed. NPDES permits also routinely include monitoring and reporting requirements, standard conditions, and special conditions.

Sections 301, 304, and 306 of the CWA require that EPA develop technology-based effluent limitations guidelines and new source performance standards that are used as the basis for technology-based minimum discharge requirements in wastewater discharge permits. EPA issues these effluent limitations guidelines and standards for categories of industrial dischargers based on the pollutants of concern discharged by the industry, the degree of control that can be attained using various levels of pollution control technology, the economic achievability of meeting the level of control, and other factors identified in section 304 and 306 of the CWA. EPA has promulgated regulations setting effluent limitations guidelines and standards under sections 301, 304, and 306 of the CWA for more than 50 industries. See 40 CFR parts 405–471. Among these, EPA has established effluent limitations guidelines that apply to most of the industry categories that use cooling water intake structures (*e.g.,* steam electric power generation, iron and steel manufacturing, pulp and paper, petroleum refining, chemical manufacturing).

Section 306 of the CWA requires that EPA establish discharge standards for new sources. For purposes of section 306, new sources include any source that commenced construction after the promulgation of applicable new source performance standards, or after proposal of applicable standards of performance

if the standards are promulgated in accordance with section 306 within 120 days of proposal. CWA section 306; 40 CFR 122.2. New source performance standards are similar to the technology-based limitations established for existing sources, except that new source performance standards are based on the best available demonstrated technology instead of the best available technology economically achievable. New facilities have the opportunity to install the best and most efficient production processes and wastewater treatment technologies. Therefore, Congress directed EPA to consider the best demonstrated process changes, in-plant controls, and end-of-process control and treatment technologies that reduce pollution to the maximum extent feasible. In addition, in establishing new source performance standards, EPA is required to take into consideration the cost of achieving the effluent reduction and any non-water quality environmental impact and energy requirements.

B. What Is Required Under Section 316 of the Clean Water Act?

Section 316(b) seeks to minimize the adverse environmental impact associated with cooling water intake structures. Section 316(b) provides, ''Any standard established pursuant to [CWA section 301] or [CWA section 306] and applicable to a point source shall require that the location, design, construction, and capacity of cooling water intake structures reflect the best technology available for minimizing adverse environmental impact.''

Congress included section 316 in the CWA for the express purpose of regulating thermal discharges and addressing the environmental impact of cooling water intake structures. Sections 316(a) and (c) provide for relief in certain circumstances from the thermal effluent standards applicable to point source discharges of pollutants. Section 316(b) does not focus on controlling the discharge of pollutants; rather, it addresses the environmental impact of cooling water intake structures. Section 316(b) is the only provision in the CWA that focuses exclusively on water intake.

Today's proposal would establish requirements that focus on the location, design, construction, and capacity of cooling water intake structures at new facilities. For each of these features, today's proposed rule would establish minimum requirements that constitute the ''best technology available for minimizing adverse environmental impact.'' EPA notes that ''best technology available'' (BTA) is a distinct standard under the CWA. Although it is technology-based and similar to the standards used in the development of effluent limitations guidelines (*i.e.,* best available technology economically achievable), the BTA standard does not explicitly include any consideration of the costs of ensuring that cooling water intake structures reflect the best technology available, although based on legislative history EPA has long done so. In addition, the standards developed under section 316(b) focus on minimizing adverse environmental impact.

Today's proposal also would define a cooling water intake structure as the total physical structure and any associated constructed waterways used to withdraw water from waters of the U.S., provided that at least twenty-five (25) percent of the water withdrawn is used for cooling purposes. New facilities subject to this proposed regulation would be those with a design intake flow of greater than two (2) million gallons per day (MGD).

IV. History

A. Have Prior EPA Regulations Addressed Cooling Water Intake Structures?

In April 1976 EPA published a rule under section 316(b) that addressed cooling water intake structures. 41 FR 17387 (April 26, 1976), proposed at 38 FR 34410 (December 13, 1973). The rule added a new § 401.14 to 40 CFR Chapter I that reiterated the requirements of CWA section 316(b). It also added a new part 402, which included three sections: (1) § 402.10 (Applicability); (2) § 402.11 (Specialized definitions); and (3) § 402.12 (Best technology available for cooling water intake structures). Section 402.10 stated that the provisions of part 402 applied to ''cooling water intake structures for point sources for which effluent limitations are established pursuant to section 301 or standards of performance are established pursuant to section 306 of the Act.'' Section 402.11 defined the terms ''cooling water intake structure,'' ''location,'' ''design,'' ''construction,'' ''capacity,'' and ''Development Document.'' Section 402.12 included the following language:

> The information contained in the Development Document shall be considered in determining whether the location, design, construction and capacity of a cooling water intake structure of a point source subject to standards established under section 301 or 306 reflect the best technology available for minimizing adverse environmental impact.

In 1977 fifty-eight electric utility companies challenged these regulations, arguing that EPA had failed to comply with the requirements of the Administrative Procedure Act (APA) in promulgating the rule. Specifically, the utilities urged that EPA had neither published the Development Document in the **Federal Register** nor properly incorporated the document into the rule by reference. The United States Court of Appeals for the Fourth Circuit agreed and, without reaching the merits of the regulations themselves, remanded the rule. *Appalachian Power Co.* v. *Train,* 566 F.2d 451 (4th Cir. 1977). EPA later withdrew part 402. 44 FR 32956 (June 7, 1979). 40 CFR 401.14 remains in effect.

B. How Is Section 316(b) of the CWA Being Implemented Now?

Since the Fourth Circuit remanded EPA's section 316(b) regulations in 1977, decisions implementing section 316(b) have been made on a case-by-case, site-specific basis. EPA published guidance addressing section 316(b) implementation in 1977. See Draft Guidance for Evaluating the Adverse Impact of Cooling Water Intake Structures on the Aquatic Environment: Section 316(b) P.L. 92–500 (U.S. EPA, 1977). This guidance describes the studies recommended for evaluating the impact of cooling water intake structures on the aquatic environment, and it establishes a basis for determining the best technology available for minimizing adverse environmental impact. The 1977 Section 316(b) Draft Guidance states, ''The environmental-intake interactions in question are highly site-specific and the decision as to best technology available for intake design, location, construction, and capacity must be made on a case-by-case basis.'' (Section 316(b) Draft Guidance, U.S. EPA, 1977, p. 4). This case-by-case approach also is consistent with the approach described in the 1976 Development Document referenced in the remanded regulation.

The 1977 Section 316(b) Draft Guidance suggests the general process for developing information needed to support section 316(b) decisions and presenting that information to the permitting authority. The process involves the development of a site-specific study of the environmental effects associated with each facility that uses one or more cooling water intake structures, as well as consideration of that study by the permitting authority in determining whether the facility must make any changes to minimize adverse environmental impact. Where adverse environmental impact is present, the 1977 Draft Guidance suggests a ''stepwise'' approach that considers screening systems, size, location, capacity, and other factors.

Although the Draft Guidance describes the information that should be developed, key factors that should be considered, and a process for supporting section 316(b) determinations, it does not establish national standards based on the best technology available to minimize adverse environmental impact. Rather, the guidance leaves the decisions on the appropriate location, design, capacity, and construction of each facility to the permitting authority. Under this framework, the Director determines whether appropriate studies have been performed and whether a given facility has minimized adverse environmental impact.

V. Scope and Applicability of the Proposed Rule

A. Who Is Covered Under This Proposed Rule?

Today's proposed rule would apply to you if you are the owner or operator of a facility that meets all of the following criteria:

- Your facility is a new facility;
- Your new facility has a cooling water intake structure or structures;
- Your new facility's cooling water intake structure(s) withdraw(s) water from waters of the U.S. and at least twenty-five (25) percent of the water withdrawn is used for contact or noncontact cooling purposes;
- Your new facility has a design intake flow of greater than two (2) million gallons per day (MGD); and
- Your new facility has an NPDES permit or is required to obtain one.

B. What Is a ''New Facility''?

EPA is proposing to define the term ''new facility'' to mean any building, structure, facility or installation which

- Meets the definition of ''new source'' or ''new discharger'' in 40 CFR 122.2 and 122.29(b)(1), (2), and (4);
- Commences construction after the effective date of this rule; and
- Has a new or modified cooling water intake structure that withdraws water from waters of the U.S.

This proposal covers only ''greenfield'' and ''stand-alone'' facilities. A ''greenfield'' facility is a facility that is constructed at a site at which no other source is located, or that totally replaces the process or production equipment at an existing facility. A ''stand-alone'' facility is a new, separate facility that is constructed on property where an existing facility is located and whose processes are substantially independent of the existing facility at the same site. A modified cooling water intake structure is one that has some part of the intake, including the pumps, changed, replaced, or expanded to accommodate, in whole or in part, a new facility's water usage. Routine maintenance and repair to an intake structure which is currently withdrawing cooling water and does not result in an increase in design capacity is not considered a modification. Facilities that meet the conditions of 40 CFR 122.29(b)(3) would be considered to be undergoing a modification and would not be considered a ''new facility'' under these regulations. Such facilities will be addressed during the forthcoming existing facility rulemaking.

Examples of when a facility would be considered a new facility include, but are not limited to the following:

- Facility A is newly constructed on a property that has never been used for industrial or commercial activity, and a new cooling water intake structure is constructed for Facility A's use.
- Facility B, which produces widgets, is demolished and Facility C is constructed in its place. (Facility C might or might not produce widgets). Facility C uses the cooling water intake structure that Facility B used but modifies it in some way.
- Facility D is in commercial operation. Facility E, a separate and independent industrial operation, is constructed on the property that Facility D owns. The cooling water intake structure that Facility D uses is modified by constructing a new intake bay for Facility E's use.

Modifications to an existing facility would not be covered under this proposed rule. Rather, such modifications will be addressed during the existing facility rulemaking. Examples of when a facility undergoing a change or modification would be considered an existing facility might include the following:

- Facility F is in commercial or industrial operation. Facility F modifies its facility and either continues to use the original cooling water intake structure or a new or modified cooling water intake structure.
- Facility G has an existing intake structure. Facility H, a separate and independent industrial operation, is constructed on the property that Facility G owns and connects to Facility G's cooling water intake structure behind the intake pumps. In this case, the cooling water intake structure has not been modified for Facility H's use. This would remain true even if routine maintenance or repairs were performed on the structure.
- Facility J is in commercial or industrial operation. Facility J adds a new process unit consistent with 40 CFR 122.29(b)(3) that is directed toward the same general activity (*e.g.,* a new peaking unit at an electricity generation station) as facility J's existing operations. Facility J may or may not modify its intake structure to accommodate the new unit.

Today's proposal would define a facility as new based on the date the facility commences construction within the meaning of 40 CFR 122.29(b)(4). Under this approach, any facility that commences construction after the date on which the final rule is effective would have to comply with the new facility requirements. This approach to defining ''new facility'' is generally consistent with the definition of the terms ''new source'' and ''new discharger'' used in the NPDES permitting program (see 40 CFR 122.2 and 122.29), and it should provide adequate notice and time for the planning needed to implement the technological changes necessitated by the requirements.

C. What Is a ''Cooling Water Intake Structure''?

At § 125.83, EPA is proposing to define a ''cooling water intake structure'' as the total physical structure and any associated constructed waterways used to withdraw water from a water of the U.S., provided that at least twenty-five (25) percent of the water withdrawn is used for cooling purposes. The cooling water intake structure extends from the point at which water is withdrawn from the surface water source to the first intake pump or series of pumps. The intended use of the cooling water is to absorb waste heat rejected from processes employed or from auxiliary operations.

This definition differs from the definition included in the 1977 Draft Guidance. First, the proposed definition clarifies that the cooling water intake structure includes the physical structure and technologies that extend up to the first intake pump or series of pumps. This change is intended to define more clearly what EPA considers to constitute the cooling water intake structure. Second, the definition would apply to water being brought in for both contact and noncontact cooling purposes. This clarification is necessary because cooling water intake structures typically bring water into at a facility for numerous purposes, including industrial processes; use as circulating water, service water, or evaporative cooling tower makeup water; dilution of effluent heat content; equipment cooling; and air conditioning. Finally, the proposed definition includes intake structures if a facility uses twenty-five

(25) percent or more of the water drawn through the structure for cooling purposes. This also is a change from the current practice. (The 1976 final rule and 1977 Draft Guidance definition of a ''cooling water intake structure'' included intake structures if a facility used the major portion of water drawn through the structure for cooling purposes. In practice, many permitting authorities have interpreted that definition to apply to intake structures if a facility uses more than 50 percent of the water drawn through the structure for cooling.)

Based on experience since the late 1970s, the Agency included intake structures at new facilities in today's proposal if a facility uses twenty-five (25) percent or more of the withdrawn water for cooling purposes. It is well settled that section 316(b) applies to all categories of point sources. See *United States Steel Corp.* v. *Train*, 556 F.2d 822, 849–50 (7th Cir. 1977). In practice, however, section 316(b) has been implemented at few facilities other than steam electric generating plants, despite the fact that a number of other industries use significant amounts of cooling water. EPA chose twenty-five (25) percent as a reasonable threshold for the percent of flow used for cooling purposes in conjunction with the two MGD total flow threshold discussed at section V.D. below to ensure that almost all cooling water withdrawn from waters of the U.S. are addressed by the requirements in this proposal for minimizing adverse environmental impact. The Agency invites comment on this proposed approach to defining a cooling water intake structure. The Agency also invites comment on whether it should define a cooling water intake structure in a manner similar to the 1976 final rule and 1977 draft guidance. If EPA implemented the latter approach, language such as the following would be included in proposed § 125.83:

Cooling water intake structure means the total structure used to direct water into the components of the cooling systems wherein the cooling function is designated to take place, provided that the intended use of the major portion of the water so directed is to absorb waste heat rejected from the process or processes employed or from auxiliary operations on the premises, including air conditioning.

The Agency also invites comment on an alternative where the Agency would define a cooling water intake structure to include intake structures if a facility uses five percent or more of the water drawn through the structure for cooling purposes. This alternative would further ensure that almost all cooling water withdrawn from waters of the U.S. is addressed by the requirements of this national regulation. This alternative also might minimize any potential that the proposed 25 percent threshold would discourage recycling of cooling water, or reuse of cooling water for process needs, by facilities that recycle or reuse cooling water at rates above 25 percent, and might choose to reduce their recycling/reuse rates to avoid meeting the requirements of the proposed rule. For similar reasons, the Agency is considering alternative definitions for a cooling water intake structure based on whether 20 percent, 15 percent, or 10 percent of the intake flow drawn through the structure is used for cooling. The Agency also invites comments on these alternative definitions.

D. Must My Facility Withdraw Water From Waters of the U.S.?

The requirements proposed today would apply to cooling water intake structures that withdraw amounts of water greater than the proposed flow threshold from ''waters of the U.S.'' Waters of the U.S. include the broad range of surface waters that meet the regulatory definition at 40 CFR 122.2, which includes lakes, ponds, reservoirs, nontidal rivers or streams, tidal rivers, estuaries, fjords, oceans, bays, and coves. These potential sources of cooling water may be adversely affected by impingement and entrainment.

Some facilities discharge heated water to cooling ponds, then withdraw water from the ponds for cooling purposes. Cooling ponds are considered ''waters of the U.S.'' if they meet the criteria in the definition of ''waters of the U.S.'' at 40 CFR 122.2. Therefore, facilities that withdraw cooling water from cooling ponds that are ''waters of the U.S.'' and that meet today's other proposed criteria for coverage (including the requirement that the facility have or be required to obtain an NPDES permit) would be subject to today's proposed rule. EPA invites comment on the applicability of today's proposal to new facilities that withdraw water from cooling ponds that are considered ''waters of the U.S.''

At § 125.81, EPA is proposing that national BTA requirements would apply to new facilities that have a cooling water intake structure with a design intake capacity of greater than or equal to two (2) MGD of source water. EPA chose the two MGD threshold in conjunction with the proposed threshold discussed in the immediately preceding section, that would define a cooling water intake structure as any structure withdrawing water from a water of the U.S. if more than twenty-five (25) percent of the water withdrawn through the structure is used for cooling purposes. EPA estimates that the two MGD threshold would subject approximately 90 percent of all cooling water flows from new facilities to the proposed rule. EPA based this estimate on: (1) EPA's projected universe of new facilities that would be subject to the proposed rule; and (2) review of a limited set of data on percent of intake flow used for cooling that EPA drew from responses to the detailed questionnaires mailed to existing facilities in January 2000.

EPA believes that cooling water intake structure withdrawals that are at or below a two MGD threshold would generally affect only a very small proportion of a water body or, if the water body is very small, would have a localized impact. EPA believes that facilities, which because of their small quantity of cooling water use, either are unlikely to cause or have limited potential to cause adverse environmental impact need not be subject to national regulation. This is especially so because the Agency has limited information on such facilities with respect to cooling water usage and their potential for adverse impact. The Director may consider whether to address new facilities that use lesser amounts of cooling water on a case-by-case basis using best professional judgment.

In addition to a two MGD flow threshold, the Agency is considering higher flow thresholds including 5, 10, 15, 20, 25, and 30 MGD. To evaluate the amount of cooling water that would be covered under these alternative thresholds, EPA used data from its screener questionnaire sent to existing industries that use the largest amounts of cooling water and made a number of important assumptions. First, EPA assumed that new and existing facilities would use similar amounts of cooling water. The Agency notes this assumption may overestimate the percentage of flows at new electricity generating facilities that would be covered by the proposed rule as many of these facilities, if they intend to use waters of the U.S. for cooling, also intend to use technologies to minimize cooling water flow. For example, only three of the seven specific, planned electricity generating facilities for which EPA has information on cooling water system design would use more than 10 MGD. Second, EPA assumed that data in the screener survey on total intake flow could be used to represent cooling water flows. Finally, the Agency assumed that none of the facilities included in the screener survey used less than 25% of

their total intake flow for cooling. This last assumption should not affect statements about steam electric generating facilities as most of their intake flow is used for cooling. However, as manufacturing facilities in the screener survey may use significant amounts of process water, some portion of these facilities may not use 25% or more of their intake flow for cooling and, if they were new facilities, would not be within the scope of the proposed rule.

For comparison purposes, EPA first analyzed a two MGD threshold and estimated that it would subject up to 99.97 percent of all cooling water flows from these industries to the proposed rule. On an industry-specific basis, the percentage of flows covered by the rule would range from more than 99.99 percent in the electric utility industry to as much as 98 percent in the chemical industry.

Using a similar methodology, EPA estimates that a 10 MGD flow threshold would subject up to 99.67 percent of all cooling water flows in the industries that use the largest volumes of cooling water to the proposed rule. On an industry-specific basis, the percentage of flows covered by the rule would range from 99.95 percent in the electric utility industry to as much as 79 percent in the refining industry. EPA estimates that a twenty-five (25) MGD threshold would subject up to 99.1 percent of all cooling water flows from these industries to the proposed rule. On an industry-specific basis, the percentage of flows covered by the rule would range from 99.8 percent in the electric utility industry to as much as 65 percent in the chemical industry.

The Agency invites comment on the proposed two MGD flow threshold and the alternative flow thresholds discussed above. The Agency also invites comment on whether a higher threshold (such as 25 MGD) might be appropriate for a facility that uses 10 percent or less of a water body at critical low flow periods.

EPA is proposing to set the threshold at 2 MGD to ensure that almost all cooling water withdrawn from waters of the U.S. is covered by a national regulation. However, the Agency recognizes that there is little information currently available regarding the lower bound of withdrawals at which adverse environmental impact is likely to occur. Most case studies documenting impingement and entrainment from cooling water withdrawals in the past have focused on facilities withdrawing very large amounts of water (in most cases greater than 100 MGD). There is less information available on the impacts of withdrawals at any of the levels being considered for the MGD flow threshold. EPA is aware of impingement and entrainment studies at a facility in Michigan with a 20 MGD flow. EPA also is aware of at least one study of impingement and entrainment at a facility in New York State that proposed to withdraw 4.2 MGD. In this case, the Director estimated fish mortalities of 24,500 American Shad, 1.9 million river herring, 1200 striped bass and 23,000 white perch. The Agency invites commenters to provide any data they may have regarding impingement and entrainment rates associated with 2 MGD water withdrawals. The Agency also invites commenters to provide any data they may have regarding impingement and entrainment rates associated with an alternative flow threshold of 5 MGD. The Agency also invites commenters to provide any data they may have regarding impingement and entrainment rates associated with the alternative flow thresholds of 10 MGD, 15 MGD, 20 MGD, 25 MGD, and 30 MGD.

EPA invites comment on all aspects of using these proposed thresholds to establish the universe of facilities that would be subject to the BTA requirements of this proposed regulation.

In addition to the MGD flow threshold discussed above, EPA is considering whether it should add a flow threshold to address the potential for adverse environmental impact posed by facilities that withdraw less than 2 million gallons of water per day but are located on smaller water bodies. To provide an additional measure of protection for these water bodies, the Agency might also include facilities that withdraw less than 2 MGD in this rulemaking if they withdraw more than 1% of the mean annual flow of a freshwater river or stream; the mean annual volume of a lake or reservoir; or the volume of the water column within the area centered about the opening of the intake with a diameter defined by the distance of one tidal excursion at the mean low water level for an estuary or tidal river. If the Agency were to include this additional flow threshold, language such as the following would be added at the end of the proposed § 125.81:

Or a design intake flow of greater than one (1) percent of the waterbody flow or volume (the mean annual flow of a freshwater river or stream; the mean annual volume of a lake or reservoir; or the volume of the water column within the area centered about the opening of the intake with a diameter defined by the distance of one tidal excursion at the mean low water level for tidal rivers and an estuaries.

The Agency invites comment on this alternative flow threshold. The Agency also invites comment on whether it should include a higher threshold based on a facility's withdrawal as a percentage of waterbody flow or volume, such as five percent, 10 percent or 20 percent.

Should EPA decide to include a flow threshold based on a facility's withdrawal as a percentage of waterbody flow or volume, the Agency requests comment on whether it should establish an absolute minimum flow threshold (such as 50,000 or 100,000 gallons of waters of the U.S. used on a daily basis for cooling purposes) in conjunction with the one (1) percent of the water body flow or volume threshold described above. An absolute minimum gallon per day threshold could ensure that very small new facilities located on very small streams are not captured by the national regulation and, instead, are addressed by the Director, as appropriate, using best professional judgment on a case-by-case basis. If EPA added a minimum flow threshold to the part of the applicability criteria that relates to withdrawal of water by the facility, language such as the following would be added at the end of proposed § 125.81, as modified by the alternate regulatory language described in the preceding paragraph: ''and greater than [100,000 gallons] per day.''

E. Must My Facility Have a Point Source Discharge Subject to an NPDES Permit?

Today's proposed rule would apply only to new facilities as defined in § 125.83 that have an NPDES permit or are required to obtain one because they discharge or might discharge pollutants, including storm water, from a point source to waters of the U.S. Requirements for minimizing the adverse environmental impact of cooling water intake structures would continue to be applied through NPDES permits.

Based on the Agency's review of existing facilities that employ cooling water intake structures, the Agency anticipates that most new facilities that would be subject to this rule will control the intake structure that supplies them with cooling water and discharge some combination of their cooling water and wastewater and storm water to a water of the U.S. through a point source regulated by an NPDES permit. In this scenario, the requirements for the cooling water intake structure would be applied in the facility's NPDES permit. In the event

that a new facility's only NPDES permit is a general permit for storm water discharges, the Agency anticipates that the Director would write an individual NPDES permit containing requirements for the facility's cooling water intake structure. The Agency invites comment on this approach for applying cooling water intake structure requirements to the facility. Alternatively, requirements applicable to cooling water intake structures could be incorporated into general permits. The Agency also invites comment on this approach.

In addition to the scenario described above, based on the Agency's review of existing facilities that employ cooling water intake structures, the Agency anticipates that some new facilities that have or are required to have an NPDES permit will not directly control the intake structure that supplies their facility with cooling water. For example, a number of facilities operated by separate entities might be located on the same, adjacent, or nearby property; one of these facilities might take in cooling water and then transfer it to other facilities prior to discharge of the cooling water to a water of the U.S. As another example, some facilities might use municipal water that is withdrawn from a water of the U.S. as their source for cooling water. The Agency invites comment on whether and how to prescribe section 316(b) requirements in these instances. In particular, the Agency invites comment on the proposal to regulate an intake structure if more than one-half of the flow serves new facilities and whether the threshold should be higher or lower. In addition, as in the previous paragraph, the Agency invites comment on a scenario in which the Director would place cooling water intake requirements in the new facility's NPDES permit and in the NPDES permit of the entity that controls the intake to ensure compliance with the cooling water intake requirements proposed today. This scenario is analogous to the Agency's finding of law in General Counsel Opinion No. 43 (June 11, 1976) that industrial users of a privately owned wastewater treatment plant are jointly and severally responsible for compliance with the provisions of the NPDES permit issued for the treatment plant. Alternatively, the Director could place cooling water intake requirements only in the permit of the facility that operates the structure. This would be administratively simpler and would limit permit requirements to the facility with direct operational control of the structure. The Agency also requests comment on this approach. If the new facility or the entity that controls the intake would have or be required to have only a general permit for storm water discharges, the Director would issue individual NPDES permit requirements, unless appropriate cooling water intake requirements were included in the general permit.

Should the requirements proposed today apply to only new facilities that control their intake structure, the Agency recognizes the possibility that some new facilities that have or are required to have an NPDES permit might restructure their operations to place control of the cooling water intake structure in an entity separate from the new facility withdrawing water for cooling purposes. In these situations, the Agency proposes to examine the operation of the new facility and the cooling water intake structure together. Should the Agency determine that the structure would be within the scope of this proposed rule but for the fact that it is not directly controlled by the new facility using the water, the Agency is considering applying the new facility requirements to the cooling water intake structure. The Agency invites comment on the policy merits of this position and how the Agency should prescribe cooling water intake structure requirements in this scenario.

Today's proposal applies only to facilities that are required to have an NPDES permit for direct discharges to surface waters. However, because similar adverse environmental impact can be caused by cooling water intake structures used by new facilities not subject to the NPDES program, the Agency encourages the Director to closely examine scenarios in which a new facility withdraws significant amounts of cooling water but does not have an NPDES permit. As appropriate, the Director should apply other legal requirements, such as section 404 or 401 of the Clean Water Act, the Coastal Zone Management Act, the National Environmental Policy Act, or similar State authorities to address adverse environmental impact caused by cooling water intake structures at those new facilities.

New facilities that EPA does not propose to regulate today, but that might cause similar impact, include the following:

- New facilities that withdraw cooling water from a water of the U.S. and discharge it along with other flows to a POTW for treatment and discharge;
- New facilities that purchase cooling water from a second facility that owns and operates the cooling water intake structure and withdraws the water from a water of the U.S. The new facility discharges the cooling water along with other flows to a POTW for treatment and discharge;
- New facilities that purchase cooling water from a municipal utility. The municipal utility owns and operates the cooling water intake structure and withdraws water from a water of the U.S. The new facility uses a significant amount of the municipal water for cooling purposes and discharges its cooling water to a POTW for treatment and discharge.

The Agency's concern regarding the environmental impact caused by cooling water intake structures at new facilities that would not be regulated by today's proposal is tempered somewhat by the following considerations. In each of the three scenarios just described, cooling water discharges would be sent to a publically owned treatment works. Based on responses to the Agency's section 316(b) screener questionnaire, the Agency estimates that the average cooling water use by a large utility steam electric generating facility is approximately 700 MGD; average water use by a large nonutility steam electric generating facility (*i.e.*, a facility that owns electric generating capacity but typically sells its electricity to a utility for distribution) is approximately 85 MGD. In most circumstances, a POTW would not accept such large volumes of cooling water because the flows from these facilities would likely dilute the waste stream reaching the POTW to the point where the POTW could face significant difficulty meeting its secondary treatment standard requiring removal of a fixed percentage of incoming biological oxygen demand. POTWs also enforce pretreatment requirements to ensure that heat in wastewater discharged does not interfere with biological treatment processes. Such large volumes of cooling water could potentially be too hot for the POTW to accept. In the third scenario presented in the preceding paragraph, the cost of using water treated to meet drinking water standards as cooling water is an additional issue. (The Agency notes that some steam electric generating facilities do use treated municipal *effluent* for cooling water, a distinct practice that has the potential to reduce use of waters of the U.S. for cooling water.) For manufacturing facilities, the potential for indirect discharge of cooling water might be greater. For example, the pulp and paper industry is the largest industrial process water user in the United States. In 1990 EPA surveyed 565 mills that manufacture pulp, paper, and paperboard as part of the Agency's development of effluent limitation

guidelines for this industry. Of the 565 pulp mills, 203 (36 percent) discharge a total volume of 680 MGD indirectly to municipal treatment works.

In order to address the potential concerns with cooling water intake by indirect dischargers, the Agency invites comment on an alternative where the Agency would regulate point sources that supply large volumes of cooling water to indirect dischargers (e.g., municipal utilities or other water suppliers) and place technology requirements to satisfy section 316(b) into the NPDES permit of the utility that controls the intake. The Agency is aware of the practical difficulties in requiring facilities that supply water to large numbers of customers to account for the specific end uses.

VI. Data Collection and Overview of Industries Potentially Subject to Proposed Rule

A. Overview

As discussed above, today's proposed rule would apply to new facilities with cooling water intake structures as defined in § 125.83 that are point sources requiring an NPDES permit. Generally, facilities that meet these criteria fall into two major groups, new steam electric generating facilities and new manufacturing facilities. These would include new facilities in the pulp and paper, chemical, petroleum, iron and steel, and aluminum manufacturing industries, which are known to be major users of cooling water.

B. New Steam Electric Generating Facilities

To identify planned utility and nonutility electric generating facilities that could potentially be affected by the section 316(b) new facility regulation, EPA used the NEWGen database, developed by Resource Data International (RDI). This database provides facility-level data on new power projects, including information on generating technology, plant capacity, electric interconnection, project status, date of initial commercial operation, and other operational details. The Agency evaluated each of the 466 facilities identified in the RDI database for the following criteria: ''new plant'' status, project status, location within the United States, plant type, anticipated date of initial commercial operation, and availability of cooling water intake structure information.

EPA's review identified 305 proposed new utility and nonutility electric generating facilities in the United States. Of these, 188 facilities will generate electricity using steam turbine or combined-cycle prime movers and would be potentially subject to regulation under section 316(b). (The term ''prime mover'' refers to the primary mechanism used by a facility to produce electricity.) To conduct various analyses required by statute and executive order (*e.g.*, Executive Order 12866), EPA examined facilities with a projected operational date of August 13, 2001, or later as potential new facilities that would be subject to this proposal. Ninety-four facilities meet this criterion. Fifty-six of the ninety-four facilities had reported information on their planned source and volume of cooling water to their permitting authorities. EPA based the analyses in support of this proposed regulation partially on those 56 facilities.

Eighty-eight percent of the 56 facilities examined plan to use combined-cycle [1] prime movers to generate electricity. Combined-cycle/cogeneration facilities are the second most common type of new facility, representing approximately 5 percent of the analyzed new facilities. In total, combined-cycle facilities represent more than 91 percent of the new capacity. The 56 facilities EPA identified will account for a total of 40,500 megawatts of additional generation capacity. On the basis of the capacity of these sample facilities and the total electric generation capacity forecasted by the Energy Information Administration (EIA), EPA predicts that 13 new facilities that will incur costs under this proposed regulation will be built over the next 10 years. For the period 2011 to 2020, EPA estimates that an additional 103 new facilities would be built but only 27 of these facilities would be in scope of today's proposed rule.

EPA further analyzed all 56 potential facilities to determine whether they would qualify as ''new facilities'' subject to this regulation as defined in § 125.83. Of the 56 facilities for which the source and volume of cooling water could be determined, only seven meet all of the proposed criteria for new facilities that are within the scope of this proposed regulation. Of these seven, one facility is proposing to locate a cooling water intake structure in a tidal river, four in nontidal rivers, and two in lakes. The remaining 49 facilities will either not withdraw cooling water from waters of the U.S. (45 facilities), will use cooling water withdrawn through an existing intake structure (three facilities), or are not expected to require an NPDES permit (one facility). These 49 facilities therefore would not be subject to the proposed section 316(b) new facility regulation. Forty-one of the 45 facilities that will not withdraw cooling water from a surface water source (approximately 91 percent) will use municipal water, ground water, or treated effluent, or a combination of the three, as a source of cooling water. The remaining four facilities are not expected to have a cooling water intake structure because they are air cooled. Based on the seven facilities that would be affected from the sample of 56 facilities and the Energy Information Administration forecast of total steam electric generation capacity additions, EPA projects 13 facilities would be affected over the next 10 years and an additional 27 facilities over the following 10 years. Therefore, the Agency's cost and regulatory impact analyses for the utility and non-utility electricity-producing industries focused on 40 electricity generating facilities over 20 years.

C. New Manufacturing Facilities

EPA identified prospective new facilities in the other industry sectors affected by today's proposed rule through a consultation process with the respective associations for those industries, review of independent market analyses, and projections based on the *Section 316(b) Industry Screener Questionnaire: Phase I Cooling Water Intake Structures.* EPA contacted the following industry associations: American Forest and Paper Association, American Petroleum Institute, National Petrochemical Refiners Association, American Iron and Steel Institute, Steel Manufacturers Association, Specialty Steel Industry of North America, the Aluminum Association of America, and the Chemical Manufacturers Association. The Agency questioned each of the associations about growth in its industry, including projections about construction of new facilities. EPA also reviewed independent forecasts for the major industry sectors likely to be affected by today's proposed rule to assess the number of new facilities likely to be built in the foreseeable future. Finally, EPA estimated the number of new manufacturing facilities likely to be within the scope of today's rule based on preliminary data addressing existing facilities.

EPA estimates that approximately 70 new manufacturing facilities that would be subject to today's proposed rulemaking will be built over the next 20 years (2001 to 2020). This number is

[1] Most of the electricity in the United States is produced by steam turbine generating units. A combined-cycle facility uses both a combustion turbine prime mover and a steam turbine prime mover to increase the efficiency of the generating unit.

generally consistent with the data EPA reviewed through industry consultations and forecast reviews.

The American Forest and Paper Association (AF&PA) reported the possibility of one new facility being built in the next few years. In addition, AF&PA indicated that a second new facility is under consideration. These are the only prospective new facilities in the pulp and paper industry. AF&PA reports that paper production in the United States has been declining and that if additional production is required, it will most likely come from expansion or full utilization of existing facilities. Review of independent industry projections supports AF&PA's information. EPA is projecting that no new facilities in the pulp and paper industry will be built in the next 20 years that would be within the scope of this rule. EPA requests comment on this projection and any relevant data commenters may have.

In the United States, steel is typically produced by either large integrated mills that convert iron ore into steel or by minimills that employ an electric arc furnace (EAF) process to fabricate scrap steel into new product. The American Iron and Steel Institute (AI&SI) represents primarily the integrated steel producers, and the Steel Manufacturers Association (SMA) represents chiefly the minimills. These associations report that there has been a significant expansion in the number of new minimills in the past few years but that much of the immediate expansion is over. A limited number of new minimills will come on line in the foreseeable future, but new integrated mills are unlikely to be built. Agency review of independent industry projections supports this assessment. According to these projections, new steelmaking capacity soon will result mostly from new minimills coming on line. This is in keeping with long-term industry trends: the EAF share of the U.S. steel market has risen from 12 percent to 50 percent in the past three decades. Although minimills generally require large amounts of cooling water, they typically use closed-cycle recirculating systems with cooling towers. Production increases by integrated producers will most likely occur as a result of capacity expansion or improved efficiencies at existing facilities rather than new construction of integrated mills. EPA estimates that eight new minimills, as well as one cold-rolled steel sheet strip and bar mill, that might incur costs under this proposed rule will be built over the next 20 years.

The Aluminum Association of America (AAA) reports it is unlikely that new primary aluminum smelters will be built in the foreseeable future. The growth area in the aluminum industry is in secondary aluminum manufacturing—facilities that recycle aluminum rather than use aluminum ore. Review of independent aluminum industry projections reveals that significant growth in demand is expected soon, but it is not certain whether this demand will be met through construction of new facilities, expansion of existing plants, or increased capacity utilization at existing facilities. EPA estimates that four new aluminum facilities that might incur costs under this proposed rule will be built over the next 20 years.

The majority of petroleum refiners are represented by two organizations, the American Petroleum Institute (API) and the National Petrochemical Refiners Association (NPRA). API represents many of the large refiners, and NPRA represents some large and many of the small refiners. Both organizations report that it is unlikely that a new refinery will be built in the foreseeable future and note that expansion of refinery capacity will occur exclusively through growth of existing facilities. Moreover, the number of refineries is declining and competitive pressures have led to consolidations and mergers in the petroleum industry. Review of independent industry projections supports this conclusion and shows that during the period between January 1990 and January 1997, the number of operable refineries in the United States declined from 205 to 164. EPA estimates that no new facilities in the petroleum and coal products sector with costs under this regulation will be built over the next 20 years.

The chemical industry is one of the more diverse industry sectors in the U.S. and includes the largest number of individual facilities of the industries subject to today's proposed rule. The Chemical Manufacturers Association (CMA) reports that there is likely to be little expansion or development of new facilities in the chemical industry in the near future. CMA expects that near term growth in industry output will occur through changes in product lines or expansion of existing facilities. Review of independent industry projections discloses that the near term picture is for considerable restructuring and consolidation with moderate growth in the number of new facilities for the longer term. However, because the chemical industry sector is so large, even moderate growth will result in the addition of a considerable number of facilities. Moreover, many of the new facilities are likely to be small businesses as CMA estimates that 40 to 60 percent of its members are small businesses and the expectation is that this ratio will remain approximately the same. EPA expects that 56 new facilities in the chemical industry sectors that are subject to the requirements of this rule will be constructed within the next 20 years.

EPA has estimated that the above industries (including the electricity generating industry) represent approximately 5,000 to 6,000 existing facilities nationwide and are responsible for almost 99 percent of all the cooling water use in the United States. Today's proposed rule would also affect other industry sectors, including textile mill products; lumber and wood products; rubber and miscellaneous plastic products; stone, clay, glass, and concrete products; and transportation equipment. EPA did not undertake outreach to or survey these industry sectors in part because the Agency has determined that all these other industries, although constituting a large number of individual facilities, in aggregate withdraw approximately 1 percent or less of all cooling water used in the United States. As a result, even if there is a substantial increase in the number of new facilities in these industry sectors, EPA projects that few would be subject to today's proposed rule. Based on the Engineering and Economic Analysis document that EPA prepared while developing this proposal, EPA projects it is unlikely that there will be new facilities in any sectors other than electricity generation, primary metals, and chemicals that would be subject to the requirements of this rule over the next 20 years. EPA requests comment on this projection and any relevant data commenters may be able to provide.

VII. Environmental Impact Associated With Cooling Water Intake Structure

A. Overview

Based on estimates cited in the record for the Agency's previous section 316(b) regulations and guidance, power plants and industrial facilities in the United States withdrew approximately 70 trillion gallons of water from U.S. waters each year for cooling water purposes. Power plants alone account for approximately 80 percent of the total cooling water withdrawals, or about 60 trillion gallons of cooling water per year.[2] The withdrawal of such large

[2] EPA anticipates updating these water usage estimates based on its survey questionnaire of

Continued

quantities of cooling water affects vast quantities of aquatic organisms annually, including phytoplankton,[3] zooplankton,[4] fish, shellfish, and many other forms of aquatic life. Aquatic organisms drawn into cooling water intake structures are either impinged on components of the cooling water intake structure or entrained in the cooling water system itself. In either case, a substantial number of these organisms are killed or subjected to significant harm as a result.

Currently, many cooling water intake structures use some type of intake control technology. In most cases these technologies prevent debris from entering the cooling water system but do not protect aquatic organisms. The most common intake devices used in the steam electric generating industry, as well as other industries, are front-end trash racks (generally fixed bars) to prevent large debris from entering the system, followed by single-entry, single-exit vertical traveling screens (conventional traveling screens). It is also noteworthy, however, that between 1955 and 1997 the number of new steam electric generating facilities using closed-cycle recirculating cooling water systems increased from 25 percent to 75 percent, with a corresponding decrease in facilities using once-through systems.[5] Between 1975 and 1984 the number of steam electric generating facilities using closed-cycle recirculating systems increased 31 percent. This trend toward the use of closed-cycle recirculating systems is projected to continue as new facilities are built. Of the seven new generating facilities that would potentially be covered by this proposed rule and for which EPA has planning information, all seven plan to use closed-cycle recirculating cooling water systems. There is also evidence of a trend among new facilities to use less cooling water. All of the seven new facilities in EPA's analysis are projected to use less than 20 MGD.

B. What Types of Environmental Impacts Are Caused by Cooling Water Intake Structures?

EPA's May 1977 *Draft Guidance for Evaluating the Adverse Impact of Cooling Water Intake Structures on the Aquatic Environment* describes two primary ways in which cooling water intake structures can cause adverse environmental impact. The first is entrainment, which occurs when organisms are drawn through the cooling water intake structure into the cooling system. Organisms that become entrained are normally relatively small benthic,[6] planktonic,[7] and nektonic[8] forms of fish and shellfish species. As entrained organisms pass through a plant's cooling system they are subject to mechanical, thermal, and toxic stress. Sources of such stress include physical impacts in the pumps and condenser tubing, pressure changes caused by diversion of the cooling water into the plant or by the hydraulic effects of the condensers, sheer stress, thermal shock in the condenser and discharge tunnel, and chemical toxemia induced by antifouling agents such as chlorine. The mortality rate of entrained organisms is high.

Another way in which intakes affect aquatic life is through the impingement of fish and other aquatic organisms on devices installed on the cooling water intake structure to prevent debris from entering the facility's cooling system. Organisms are trapped against these screening devices by the force of the water passing through the cooling water intake structure. Impingement can result in starvation and exhaustion (when organisms are trapped against an intake screen or other barrier at the entrance to the cooling water intake structure), asphyxiation (when organisms are forced against an intake screen or other barrier at the entrance to the cooling water intake structure by velocity forces that prevent proper gill movement or when organisms are removed from the water for prolonged periods of time), and descaling (when organisms are removed from an intake screen by a wash system).

In addition to impingement and entrainment losses associated with the operation of the cooling water intake structure, EPA is concerned about the overall degradation of the aquatic environment as a consequence of multiple intake structures operating in the same watershed or in the same reach or nearby reaches. EPA is also concerned about the potential impacts of cooling water intake structures located in or near habitat areas that support threatened or endangered species. Although limited data document the extent to which threatened or endangered species are harmed or killed due to impingement or entrainment, such impacts do occur. For example, EPA is aware that over a 9-year period more than 1,300 endangered sea turtles entered enclosed cooling water intake structure canals at one power plant[9] and that other plants impinge and entrain threatened delta smelt and endangered runs of chinook salmon and steelhead trout.[10]

Furthermore, EPA is concerned about adverse environmental impact associated with the construction of new cooling water intake structures. Such adverse impacts primarily result from three factors—displacement of populations and habitat resulting from the physical placement of a new cooling waste intake structure in an aquatic environment, the impact on the aquatic environment of increased levels of turbidity, and the effects on aquatic biota and habitat associated with disposal of materials excavated during construction. Unlike operational impacts, adverse impact associated with construction need not be recurring in nature. Even where construction of a new cooling water intake structure takes a number of months, such construction could cause significant adverse impact. For example, the construction of a new intake structure could destroy or harm habitat value through the physical destruction or degradation of submerged lands or banks, or by stirring up sediments. Today's proposed rule includes requirements at § 125.84(f) under which the Director could address these effects in certain circumstances. Moreover, existing programs, such as the CWA section 404 program and programs under State law, include requirements that address many of the environmental impact concerns associated with the construction of new intakes.

industrial facilities potentially subject to the section 316(b) regulation for existing facilities.

[3] Phytoplankton are tiny, free-floating photosynthetic organisms suspended in the water column.

[4] Zooplankton are small marine animals that consume phytoplankton and other zooplankton. Ichthyoplankton is a group of plankton composed of fish eggs and larvae.

[5] EPA estimates that 84 percent of existing steam electric generating facilities started operation between 1955 and 1985. An additional 7 percent of these facilities started operation between 1985 and 1997.

[6] Refers to bottom dwellers that are generally small and sessile (non-swimming), but can include certain large motile (able to swim) species. These species can be important members of the food chain.

[7] Refers to free floating microscoic plants and animals, including fish eggs and larval stages with limited ability to swim. Plankton are also an important source of food for other aquatic organisms and an essential components of the food chain in aquatic ecosystems.

[8] Refers to organisms with swimming abilities that permit them to move actively through the water column and to move against currents.

[9] The plant developed a capture-and-release program in response to these events. Most entrapped turtles were captured and released alive; however, some mortality has occurred.

[10] For example, Pittsburg and Contra Costa in the San Francisco Bay Delta area of California.

C. What Entrainment and Impingement Impacts Caused by Cooling Water Intake Structures Have Been Documented?

Research of the available literature and section 316(b) demonstration studies obtained from NPDES permit files has identified numerous documented cases of impacts associated with impingement and entrainment and the subsequent effects of these actions on populations of aquatic organisms. For example, specific losses associated with individual steam electric generating facilities include 3 billion to 4 billion larvae and postlarvae per year [11]; 23 tons of fish and shellfish of recreational, commercial, or forage value lost each year [12]; and 1 million fish lost during a 3-week study period.[13] Several studies estimating the impact of entrainment on populations of key commercial or recreational fish have predicted declines in population size. Studies of entrainment at five Hudson River power plants predicted year-class reductions ranging from 6 percent to 79 percent depending on the fish species.[14] A modeling effort looking at the impact of entrainment mortality on the population of a selected species in the Cape Fear estuarine system predicted a 15 to 35 percent reduction in the species' population.[15]

The following are among other more recent documented examples of impacts occurring in existing facilities as a result of cooling water intake structures. Also see the discussion of the benefits of today's proposed rule in Section X.B.

Brayton Point. PG&E Generating's Brayton Point plant (formerly owned by New England Power Company) is located in Mt. Hope Bay, in the northeastern reach of Narragansett Bay, Rhode Island. Due to problems with electric arcing caused by salt drift and lack of fresh water for the closed-cycle recirculating cooling water system, the company switched Unit 4 from a closed-cycle recirculating to a once-through cooling water system in 1985. The modification of Unit 4 resulted in a 45 percent increase in cooling water intake flow at the plant. Studies designed to evaluate whether the cooling water intake structure was affecting fish species abundance trends found that Mt. Hope Bay experienced a progressively steady rate of decline in finfish species of recreational, commercial, and ecological importance.[16] In contrast, species abundance trends were relatively stable in adjacent coastal areas and portions of Narragansett Bay that are not influenced by the cooling water intake structure. Further strengthening the evidence that the intake of cooling water was contributing to the documented declines was the finding that the rate of population decline increased substantially with the full implementation of the once-through cooling mode for Unit 4. The modification of Unit 4 is estimated to have resulted in an 87 percent reduction in finfish abundance based on a time series-intervention model. These impacts were associated with both impingement and entrainment, as well as the thermal discharge of cooling water. Data indicate that annual entrainment at Brayton Point averages 4.9 billion tautog eggs, 0.86 billion windowpane eggs, and 0.89 billion winter flounder larvae each year. Using adult equivalent analyses, the entrainment and impingement of fish eggs and larvae in 1994 translated to a loss of 30,885, 20,146, and 96,507 pounds of adult tautog, windowpane, and winter flounder, respectively.

San Onofre Nuclear Generating Station. The San Onofre Nuclear Generating Station (SONGS) is on the coastline of the Southern California Bight, approximately 2.5 miles southeast of San Clemente, California.[17] The marine portions of Units 2 and 3, which are once-through, open-cycle cooling systems, began commercial operation in August 1983 and April 1984, respectively. Since then, many studies have been completed to evaluate the impact of the SONGS facility on the marine environment.

Studies of kelp beds in nearshore waters in the vicinity of the SONGS facility determined that the operation of cooling water intake structures resulted in a 60 percent (80-hectare) reduction in the area covered by moderate-to high-density kelp.[18] Studies indicated that poor survival and lack of development of early life stages essential to the replenishment of the adult population resulted from increased turbidity of the waters in the vicinity of SONGS due to withdrawal of inshore turbid water for cooling purposes. The loss of kelp was also determined to be detrimental to fish communities associated with the kelp forests. For example, fish living close to the bottom of the San Onofre kelp bed experienced a 70 percent decline in abundance. Fish living in the water column in the impact areas had a 17 percent loss in abundance and a 33 percent decline in biomass relative to control populations. The abundance of large invertebrates in kelp beds also declined for many species, particularly snails.

In a normal (non-El Nino) year, some 110 tons of midwater fish (primarily northern anchovy, queenfish, and white croaker) [19] are entrained at SONGS, of which at least 41 percent are killed during plant passage. The fish lost include approximately 350,000 juveniles of white croaker, a popular sport fish; this number represents 33,000 adult individuals or 3.5 tons of adult fish. Within 3 kilometers of SONGS, the density of queenfish and white croaker in shallow-water samples decreased by 34 and 63 percent, respectively. Queenfish declined by 50 to 70 percent in deepwater samples.

Existing and historical studies like those described in this section provide only a partial picture of the severity of environmental impact associated with cooling water intake structures. Most important, the methodologies for evaluating adverse environmental impact used in the 1970s and 1980s, when most section 316(b) evaluations were performed, were often inconsistent and incomplete. For example, some studies reported only gross fish losses; others reported fish losses based on species and life stage; still others reported percent losses of the associated population or subpopulation (*e.g.*,

[11] EPA, ''Brunswick Nuclear Steam Electric Generating Plant of Carolina Power and Light Company, Historical Summary and Review of Section 316(b) Issues,'' EPA Region IV, September 19, 1979.

[12] EPA, ''Findings and Determination under 33 U.S.C. Section 1326, In the Matter of Florida Power Corporation Crystal River Power Plant Units 1, 2, and 3, NPDES Permit No. FL0000159,'' Environmental Protection Agency Region IV, December 2, 1986.

[13] Nancy J. Thurber, and David J. Jude, ''Impingement Losses at the D.C. Cook Nuclear Power Plant during 1975–1982 with a Discussion of Factors Responsible and Possible Impact on Local Populations,'' Special Report No. 115 of the Great Lakes Research Division, Great Lakes and Marine Waters Center, The University of Michigan, 1985.

[14] John Boreman and Phillip Goodyear, ''Estimates of Entrainment Mortality for Striped Bass and Other Fish Species Inhabiting the Hudson River Estuary,'' *American Fisheries Society Monograph* 4:152–160, 1988.

[15] EPA, Brunswick Nuclear Steam Electric Generating Plant of Carolina Power and Light Company, Historical Summary and Review of Section 316(b) Issues,'' Environmental Protection Agency Region IV, 1979.

[16] Mark Gibson, ''Comparison of Trends in the Finfish Assemblages of Mt. Hope Bay and Narragansett Bay in Relation to Operations of the New England Power Brayton Point Station,'' Rhode Island Division Fish and Wildlife, Marine Fisheries Office, June 1995 and revised August 1996.

[17] Southern California Edison, ''Report on 1987 Data: Marine Environmental Analysis and Interpretation, San Onofre Nuclear Generating Station,'' 1988.

[18] MRC, ''Final Report of the Marine Review Committee to the California Coastal Commission,'' Marine Review Committee, Document No. 89–02, August 1989.

[19] S. Swarbrick and R.F. Ambrose, ''Technical Report C: Entrapment of Juvenile and Adult Fish at SONGS,'' prepared for the Marine Review Committee, 1989.

young-of-year fish). Recent advances in environmental assessment techniques now provide better tools to monitor for impingement and entrainment and to detect impacts associated with the operation of cooling water intake structures.

D. What Constitutes Adverse Environmental Impact Under This Proposed Rule?

As discussed above, the 1977 section 316(b) draft guidance defined the term ''adverse environmental impact.'' It states that ''[a]dverse aquatic environmental impacts occur whenever there would be entrainment or impingement damage as a result of the operation of a specific cooling water intake structure.'' That definition also states, however, that ''[t]he critical question is the magnitude of any adverse impact.'' The guidance lists specific factors relevant for determining the long- and short-term magnitude of any adverse impacts.[20] The 1977 Draft Guidance established a process under which cooling water intake structures were evaluated on a case-by-case basis to determine the level of environmental impact occurring and the appropriate best technology available to minimize adverse environmental impact.[21]

The framework and definitions in the 1977 Draft Guidance recommend that facilities should initially determine the incremental environmental impact of each cooling water intake structure on the populations of affected species or organisms and that BTA be applied only where it is determined that such incremental impacts are deemed to constitute ''adverse environmental impact.'' However, both the decision process and the evaluation criteria contained in the guidance have proven very difficult to apply consistently. The initial determination of environmental impact has often relied on population modeling, which, given its inherent complexity, has yielded ambiguous or debatable results. One result has been that many section 316(b) permitting decisions have predominantly focused on determining whether a cooling water intake structure is causing an adverse environmental impact. Given that both the methods for making such determinations and the standard regarding what constitutes an ''adverse'' environmental impact were not precisely defined, permitting authorities have had to exercise significant judgment and focus significant time and effort to determine what requirements should be imposed under section 316(b).

In developing this proposal, EPA considered several alternatives for defining adverse environmental impact associated with the operation of cooling water intake structures. These alternatives are discussed below. EPA also considered whether a specific definition of adverse environmental impact should be included in the regulation or developed as guidance. The regulatory language in today's proposed rule does not include a definition of adverse environmental impact. However, the Agency is considering promulgating each of the alternatives discussed below as part of the final regulation and, thus, each should be viewed in a regulatory context. The Agency also might ultimately decide to publish one of these alternatives in guidance that supports the final rule. EPA is also considering taking no action regarding the definition of adverse environmental impact.

Though EPA is not proposing a definition of adverse environmental impact, the Agency did consider a number of alternatives for either defining adverse environmental impact or determining a threshold for the level of environmental impact deemed to be adverse. Consistent with this approach, EPA conceptualized adverse environmental impact in a manner that would not characterize the threshold for being considered ''adverse'' as the impingement or entrainment of a single organism, but also would not result in a threshold that is so high that it would allow for the impingement or entrainment of millions of organisms, larvae, or eggs. Thus, EPA considered adverse environmental impact as a level of impingement or entrainment of aquatic organisms that is recurring and nontrivial.

One approach EPA considered would be to define adverse environmental impact as the impingement or entrainment of one (1) percent or more of the aquatic organisms in the near-field area as determined in a 1-year study. Under this approach, the near field would be defined as that area immediately around the intake structure from which organisms are drawn onto the screens or into the cooling system. EPA considers the establishment of a one percent threshold a reasonable means to protect about 99 percent of the organisms in the water column under the influence of the cooling water intake structures. A threshold of one percent represents a reasonable approach for defining adverse impact and is consistent with the approach used by the water quality-based regulatory programs within EPA for developing the necessary levels of protection to safeguard aquatic communities. EPA seeks comment on this alternative. Regulatory language such as the following could be used to implement this approach:

> Adverse environmental impact means the impingement or entrainment of one (1) percent or more of the aquatic organisms from the area around the cooling water intake structure from which organisms are drawn onto screens or other barriers at the entrance to a cooling water intake structure or into the cooling system, as determined in the Source Water Baseline Biological Characterization.

(See Section IX.A.1 for a discussion of the Source Water Baseline Biological Characterization.)

A second alternative for defining adverse environmental impact for purposes of section 316(b) would use the definition of adverse environmental impact provided in the 1977 Draft Guidance, which is discussed above. Under this approach, adverse environmental impact would be defined as impingement and entrainment and the key inquiry would be an assessment of the magnitude of such effects. EPA could clarify through guidance when the magnitude of environmental impact is great enough to be deemed adverse.

Under a third alternative EPA is considering, adverse environmental impact would be deemed to occur whenever aquatic organisms are impinged or entrained as a result of the operation of a cooling water intake. Under this alternative, ''adverse environmental impact'' could be defined as ''any impingement or entrainment of aquatic organisms.'' This approach would be similar to the approach that the State of New York has taken in implementing its section 316(b) program, based on the State's judgment that both impingement and entrainment result in harmful environmental effects that diminish valuable public

[20] Under the 1977 Draft Guidance, the magnitude of any adverse impact should be estimated in terms of both short-term and long-term impact with reference to the following factors: (1) Absolute damage; (2) percent damage; (3) absolute and percentage damage to any endangered species; (4) absolute and percent damage to any critical aquatic organism; (5) absolute and percentage damage to commercially valuable and/or sport fisheries yield; and (6) whether the impact would endager (jeaopardize) the protection and propagation of a balanced population of shellfish and fish in and on the body of water from which the cooling water is withdrawn (long-term impact). (Draft Guidance, U.S. EPA, 1977, Definitions and Concepts p. 15).

[21] For example, the 1977 Draft Guidance states ''[t]he exact point at which adverse aquatic impact occurs at any given plant site or water body segment is highly speculative and can only be estimated on a case-by-case basis by considering the species involved, magnitude of the losses, years of intake operation remaining, ability to reduce losses, etc.'' (Draft Guidance, U.S. EPA, 1977, p. 11).

resources.[22] Such effects could have the potential to reduce the population of indigenous species; change the species mix because some species are more susceptible to impingement and entrainment than others; might increase nuisance species; harm and kill endangered and threatened species; damage critical aquatic organisms, including important elements of the food chain; and reduce commercial and sport fisheries. This approach also would provide a level of protection analogous to the level of protection provided by the Agency's criteria methodology for protecting aquatic life from toxic effects, particularly from acute lethality.[23] [24]

Yet another alternative would be to define adverse environmental impact in relation to reference sites for the type of ecosystem in which the facility proposes to locate the intake structure and then to evaluate the projected impact of the intake structure on the abundance, diversity, and other important characteristics of the aquatic community that would be expected to inhabit the site. This approach would be analogous to the Agency's recommended approach for the adoption of biocriteria into State water quality standards.[25] [26] [27] [28] [29] The Agency invites comment on implementation issues that might be associated with determining the nexus between the projected impacts of the cooling water intake structure and the reference conditions.

The Agency also requests comment on a definition of adverse environmental impact that would focus on (1) the protection of threatened, endangered, or otherwise listed species; (2) protection of socially, recreationally, and commercially important species; and (3) protection of community integrity, including structure and function. EPA is aware that the Utility Water Action Group intends to develop, and submit to EPA following peer review, one or more practical definitions of adverse environmental impact and the measures for assessing when adverse environmental impact is occurring. The measures may vary depending on the waterbody type. EPA will consider the output of this effort, if available in time, and as appropriate, as it develops the final rule.

Each of the preceding definitions of adverse environmental impact addresses impact on the aquatic environment. The Agency invites comment on whether it should define adverse environmental impact more broadly and consider nonaquatic adverse environmental impact as well. For example, some of the technologies that may be used to reduce impingement and entrainment may result in air emissions such as the drift of salts, other minerals or chemicals onto vegetation, potentially with harmful effects. Some technologies may reduce the efficiency of an electricity generating or manufacturing facility, potentially leading to increased energy consumption and increased emission of carbon dioxide or other ''greenhouse'' gases, and increased resource extraction activities that may have a harmful effect on lands and natural resources. Should the Agency decide to consider nonaquatic impact, it could do so in conjunction with any of the potential definitions of adverse environmental impact described above that address impact on the aquatic environment.

Finally, it is important to clarify and invite comment on the Agency's current interpretation of the relationship of adverse environmental impact under section 316(b) and the objective of section 316(a) to ensure protection and propagation of a balanced indigenous population of shellfish, fish, and wildlife. The Agency considers the objective stated in section 316(b) to minimize adverse environmental impact from cooling water intake structures to be distinct from that of section 316(a) to ensure protection and propagation of a balanced indigenous population of shellfish, fish, and wildlife. The Agency has long maintained that adverse environmental impact from cooling water intake structures must be minimized to the fullest extent practicable,[30] even in cases where it can be demonstrated that the standard applicable under section 316(a) is being met.[31] [32] Thus the objective of section 316(b) is more protective than that of section 316(a). However, EPA also requests comment on adapting the section 316(a) standard for purposes of section 316(b) and defining adverse environmental impact as impacts likely to interfere with the protection and propagation of a balanced indigenous population of fish, shellfish, and wildlife.

EPA invites comment on all aspects of these alternatives for defining adverse environmental impact associated with cooling water intake structures and whether such a definition should be included as part of the regulation or stated as guidance.

VIII. Best Technology Available for Minimizing Adverse Environmental Impact at New Facilities

A. What Is the Best Technology Available for Minimizing Adverse Environmental Impact at New Facilities?

1. What Are the Proposed and Alternative Regulatory Frameworks for Today's Proposed Rule?

Today's proposed rule would establish national minimum performance requirements for the location, design, construction, and capacity of cooling water intake structures at new facilities to minimize adverse environmental impact. Under the proposed rule, EPA would establish requirements for minimizing adverse environmental impact from cooling water intake structures based on the type of water body in which the intake structure is located, the location of the intake in the water body, the volume of water withdrawn, and the design intake velocity. EPA would also establish additional requirements or measures for location, design, construction, or capacity that might be necessary to minimize adverse environmental impact. The best technology available to minimize adverse environmental impact might constitute a technology suite, which would vary depending on the type of water body in which a cooling water intake structure is located as well as the location of the cooling water

[22] NYDEC, ''Clean Water Act Section 316(b), statement provided to U.S. EPA at public meeting to discuss adverse environmental impacts resulting from cooling water intake structures,'' New York State Department of Environmental Conservation, Division of Fish, Wildlife, and Marine Resources, June 29, 1998.

[23] EPA, *Technical Support Document for Water Quality-based Toxics Control,* U.S. Environmental Protection Agency, Office of Water, EPA–823–B–94–005a, August 1994.

[24] Advanced Notice of Proposed Rulemaking: Water Quality Standards Program, 63 FR 3672, July 7, 1998.

[25] Michael T. Barbour *et al.*, ''Measuring the attainment of biological integrity in the USA: a critical element of ecological integrity,'' *Hydrobiologia* 422/423:453–464, 2000.

[26] EPA, *Biological Criteria: National Program Guidance for Surface Waters,* U.S. Environmental Protection Agency, Office of Water Regulations and Standards, EPA–440/5–90–004, April 1990.

[27] EPA, *Biological Criteria: Technical Guidance for Streams and Small Rivers,* U.S. Environmental Protection Agency, Office of Water, EPA 822–B–96–001, May 1996.

[28] EPA, *Lakes and Reservoir Bioassessment and Biocriteria: Technical Guidance Document,* U.S. Environmental Protection Agency, Office of Water, EPA 841–B–98–007, August 1998.

[29] EPA, *Draft Estuarine and Coastal Marine Waters Bioassessment and Biocriteria Technical Guidance,* U.S. Environmental Protection Agency, Office of Water, July, 2000.

[30] *In re Brunswick Steam Electric Plant,* Decision of the General Counsel No. 41, June 1, 1976.

[31] *In re Public Service Co. of New Hampshire,* (Seabrook Station Units 1 and 2) (Decision of the Administrator) 10 ERC 1257, 1262 (June 17, 1977).

[32] *In re Central Hudson Gas and Elec. Corp.,* Decision of the General Counsel No. 63, July 29, 1977.

intake structure within the water body. Under this proposal, EPA would set technology-oriented performance requirements; the Agency would not mandate the use of any specific technology.

Exhibit 1 displays the framework for EPA's proposed section 316(b) new facility rule. Previously, EPA solicited public comment on a three-tiered framework for existing facilities. The framework proposed today for new facilities has evolved from Tier 1 of that framework. Under the proposed rule, EPA would group water bodies into four categories: (1) freshwater rivers or streams, (2) lakes or reservoirs, (3) tidal rivers or estuaries; and (4) oceans. The Agency considers location to be the most important factor in addressing adverse environmental impact caused by cooling water intake structures. Today's proposed rule would define the term ''freshwater river or stream'' to mean a lotic (free-flowing) system that does not receive significant inflows of water from oceans or bays due to tidal action (see § 125.83). EPA proposes to define the term ''lake'' to mean any inland body of open water with some minimum surface area free of rooted vegetation and with an average hydraulic retention time of more than 7 days. Lakes may be natural water bodies or impounded streams, usually fresh, surrounded by land or by land and a man-made retainer (*e.g.*, a dam). Lakes may be fed by rivers, streams, springs, and/or local precipitation.

BILLING CODE 6560–50–P

EXHIBIT 1–SECTION 316(B) NEW FACILITY FRAMEWORK

STANDARDS FOR CWISs LOCATED IN A FRESHWATER RIVER OR STREAM

Where CWIS Is Located at Least 50 Meters Outside the Littoral Zone In a Freshwater River or Stream

Total design intake flow of no more than the more stringent of 5% of the source water mean annual flow or 25% of the source water 7Q10
and
Maximum design intake velocity no more than 0.5 ft/s
and
Other requirements as defined by the Director in accordance with § 125.84(f) and (g)

Where CWIS Is Located Less Than 50 Meters Outside the Littoral Zone In a Freshwater River or Stream

Total design intake flow of no more than the more stringent of 5% of the source water mean annual flow or 25% of the source water 7Q10
and
Maximum design intake velocity no more than 0.5 ft/s
and
Reduce intake flow to a level commensurate with that which could be attained by a closed-cycle recirculating cooling water system
and
Other requirements as defined by the Director in accordance with § 125.84(f) and (g)

Where CWIS Is Located Inside the Littoral Zone In a Freshwater River or Stream

Total design intake flow of no more than the more stringent of 5% of the source water mean annual flow or 25% of the source water 7Q10
and
Maximum design intake velocity no more than 0.5 ft/s
and
Reduce intake flow to a level commensurate with that which could be attained by a closed-cycle recirculating cooling water system
and
Implement additional technologies that minimize impingement and entrainment of fish eggs and larvae and maximize survival of impinged adult and juvenile fish
and
Other requirements as defined by the Director in accordance with § 125.84(f) and (g)

STANDARDS FOR CWISs LOCATED IN A LAKE OR RESERVOIR

Where CWIS Is Located at Least 50 Meters Outside the Littoral Zone In a Lake or Reservoir

Total design intake flow must not upset the natural stratification of the source water
and
Other requirements as defined by the Director in accordance with § 125.84(f) and (g)

Where CWIS Is Located Less Than 50 Meters Outside the Littoral Zone In a Lake or Reservoir

Total design intake flow must not upset the natural stratification of the source water
and
Maximum design intake velocity no more than 0.5 ft/s
and
Reduce intake flow to a level commensurate with that which could be attained by a closed-cycle recirculating cooling water system
and
Other requirements as defined by the Director in accordance with § 125.84(f) and (g)

Where CWIS Is Located Inside the Littoral Zone In a Lake or Reservoir

Total design intake flow must not alter the natural stratification of the source water
and
Maximum design intake velocity no more than 0.5 ft/s
and
Reduce intake flow to a level commensurate with that which could be attained by a closed-cycle recirculating cooling water system
and
Implement additional technologies that minimize impingement and entrainment of fish eggs and larvae and maximize survival of impinged adult and juvenile fish
and
Other requirements as defined by the Director in accordance with § 125.84(f) and (g)

STANDARDS FOR CWISs LOCATED IN AN ESTUARY OR TIDAL RIVER

Where CWIS Is Located Anywhere In an Estuary or Tidal River

Total design intake volume must be no more than 1% of the volume of the water column in the area centered about the opening of the intake with a diameter defined by the distance of one tidal excursion at the mean low water
and
Maximum design intake velocity no more than 0.5 ft/s
and
Reduce intake flow to a level commensurate with that which could be attained by a closed-cycle recirculating cooling water system
and
Implement additional technologies that minimize impingement and entrainment of fish eggs and larvae and maximize survival of impinged adult and juvenile fish
and
Other requirements as defined by the Director in accordance with § 125.84(f) and (g)

STANDARDS FOR CWISs LOCATED IN THE OCEAN

Where CWIS Is Located Outside the Littoral Zone In the Ocean

Maximum design intake velocity no more than 0.5 ft/s
and
Other requirements as defined by the Director in accordance with § 125.84(f) and (g)

Where CWIS Is Located Inside the Littoral Zone In the Ocean

Maximum design intake velocity no more than 0.5 ft/s
and
Reduce intake flow to a level commensurate with that which could be attained by a closed-cycle recirculating cooling water system
and
Implement additional technologies that minimize impingement and entrainment of fish eggs and larvae and maximize survival of impinged adult and juvenile fish
and
Other requirements as defined by the Director in accordance with § 125.84(f) and (g)

KEY TERMS

Cooling water intake structure means the total physical structure and any associated constructed waterways used to withdraw water from waters of the U.S., provided that at least 25 percent of the water withdrawn is used for cooling purposes. The cooling water intake structure extends from the point at which water is withdrawn from the surface water source to the first intake pump or series of pumps.

Littoral zone means any nearshore area in a freshwater river or stream, lake or reservoir, or estuary or tidal river extending from the level of highest seasonal water to the deepest point at which submerged aquatic vegetation can be sustained (i.e., the photic zone extending from shore to the substrate receiving one (1) percent of incident light); where there is a significant change in slope that results in changes to habitat and/or community structure; and where there is a significant change in the composition of the substrate (e.g., cobble to sand, sand to mud). In oceans, the littoral zone encompasses the photic zone of the neritic region. The photic zone is that part of the water that receives sufficient sunlight for plants to be able to photosynthesize. The neritic region is the shallow water or nearshore zone over the continental shelf.

BILLING CODE 6560–50–C

EPA is proposing to define the term ''reservoir'' to mean a natural or constructed basin where water is collected and stored (see § 125.83). Consistent with CWA section 104(n)(4), EPA is proposing to define the term ''estuary'' as all or part of the mouth of a river or stream or other body of water having unimpaired natural connection with open sea and within which seawater is measurably diluted with fresh water derived from land. As estuaries are strongly affected by tidal action, EPA's proposing to specify further that the salinity of an estuary exceeds 0.5 part per thousand (by mass), but is less than 30 parts per thousand (by mass) (see § 125.83). EPA is proposing to define the term ''tidal river'' to mean the most seaward reach of a river or stream where the salinity is less than or equal to 0.5 parts per thousand (by mass) at a time of annual low flow and whose a surface elevation responds to the effects of coastal lunar tides (see § 125.83). Finally, EPA proposes to define the term ''ocean'' to mean marine open coastal waters with salinity greater than or equal to 30 parts per thousand (by mass) (see § 125.83).[33] The Agency is not using the definition of ''ocean'' found at CWA 502(10) because that definition refers to the high seas beyond the contiguous zone and the marine environment within the contiguous zone. Impacts from cooling water intake structures are most likely to occur in ocean waters in the near coastal areas.

The design and capacity of the intake structure are important factors that affect the velocity or speed at which the water passes through the screen or other barrier at the entrance to the cooling water intake structure.

Under today's proposed rule, minimum flow and velocity requirements would be applied based on the actual placement of the cooling water intake structure within the particular water body types. Because different water body types have different potential for adverse environmental impact, the requirements proposed to minimize adverse environmental impact would vary by water body type. Some would include minimum requirements in addition to flow and velocity. For example, estuaries and tidal rivers have the highest potential for adverse impact because they contain essential habitat and nursery areas for many species. Therefore, these areas require the most stringent minimum controls including measures in addition to flow and velocity requirements. In contrast to estuaries and tidal rivers, some lakes have low productive areas such as the profundal zone, which would have low potential for adverse environmental impact, thus requiring lesser minimum controls to minimize adverse environmental impact.

Under some scenarios, depending on the type of water body or where the intake structure is located within the water body, EPA is proposing to require additional design and construction technologies that would increase the survival rate of impinged biota or to further reduce the amount of entrained biota.

In general, the capacity requirement would restrict the maximum flow a facility may withdraw to a percentage of the annual mean flow or volume of the water body. For rivers, an additional requirement would limit the capacity of the cooling water intake structure so that it withdraws no more than a certain percentage of the lowest average seven-consecutive-day low flow with an average frequency of once in 10 years (7Q10). In some circumstances, EPA would also restrict the capacity of the cooling water intake structure to a level commensurate with that which could be attained by a closed-cycle recirculating system using minimized make-up and blowdown flows. After location, the flow or capacity of a cooling water intake structure is the primary factor affecting the entrainment of organisms, which is often considered the most difficult impact to control. Organisms entrained include small species of fish and immature life stages (eggs and larvae) of many species that lack sufficient mobility to move away from the area of the intake structure. Limiting the volume of the water withdrawn (flow) from a source can limit the potential for these organisms to be entrained.

Section 316(b) authorizes EPA to impose limitations on the volume of the flow of water withdrawn through a cooling water intake structure as a means of addressing ''capacity.'' *In re Brunswick Steam Electric Plant,* Decision of the General Counsel No. 41 (June 1, 1976). Such limitations on the volume of flow are consistent with the dictionary definition of ''capacity''[34], the legislative history of the Clean Water Act[35], and the 1976 regulations.[36] *Id.* Indeed, as Decision of the General Counsel No. 41 points out, the major environmental impacts of cooling water intake structures are those affecting aquatic organisms living in the volumes of water withdrawn through the intake structure. Therefore, regulation of the volume of the flow of water withdrawn also advances the objectives of section 316(b).

Today's proposed rule would also establish requirements that address velocity. For most locations, a design intake velocity requirement would restrict the through-screen or through-technology velocity to 0.5 ft/s. Intake velocity is one of the key factors that affects the impingement of fish and other aquatic biota. Velocity is easily addressed during the design and construction phase of a cooling water intake structure. The appropriate design of the intake structure relative to intake flow can minimize velocity. Alternatively, the facility can install certain hard technologies (*e.g.*, wedge wire screens and velocity caps) to change the configuration of the structure so that the effects of velocity on aquatic organisms are minimized. However, EPA is aware that some stakeholders have expressed concern with generally imposing national requirements on velocity and have argued that this may even restrict a facility's flexibility in designing an intake structure that minimizes adverse environmental impact while meeting the needs of the facility. EPA requests comment on its proposed velocity limitation of 0.5 fps, including information on specific situations or technologies for which this limit would pose a problem.

When the intake structure is located within the littoral zone, EPA would broaden the suite of technologies a facility would be required to employ, as well as increase the stringency of the requirements. This would improve the survivability of impinged organisms and reduce the rate of entrained organisms, thus furthering the statutory objective of minimizing adverse environmental impact. In these situations the additional minimal controls are necessary to minimize adverse environmental impact because the littoral zone is generally the area where aquatic organisms are the most abundant and most susceptible to impingement and entrainment.

[33] Salinity values are based on the Venice System, a well-known estuarine zonation system. See EPA, *Draft Estuarine and Coastal Marine Waters Bioassessment and Biocriteria Technical Guidance,* U.S. Environmental Protection Agency, Office of Water, July, 2000.

[34] ''Cubic contents; volume; that which can be contained.'' Random House Dictionary of the English Language, cited in Decision of the General Counsel No. 41.

[35] Legislative History of the Water Pollution Control Act Amendments of 1972, 93d Cong., 1st Sess., at 196–7 (1973).

[36] 40 CFR 402.11(c) (definition of ''capacity''), 41 FR 17390 (April 26, 1976).

Today's proposed rule would provide sound direction to permit writers that specifies minimum technology requirements, targeted to particular types of water bodies, for use in section 316(b) determinations. This would help the Directors implement consistent, protective decisions. The requirements proposed in today's proposed rule are protective on a national level. However, as further discussed at VIII.A.7., EPA recognizes that an individual facility might have a unique or site-specific environmental characteristic such that the national requirements might not achieve the objective of minimizing adverse environmental impact. For example, a migratory species traveling past a particular cooling water intake structure at a facility that does not cause adverse environmental impact in the absence of such migrations.

It is the Agency's intent that permitting authorities familiar with the unique situation in their areas have the flexibility, on a case-by-case basis, to implement additional measures under this proposal to achieve the core requirement of section 316(b), which is to minimize adverse environmental impact. Measures that the Agency deems appropriate would include, but not be limited to, seasonal flow restrictions that result in short term plant shutdowns during spawning or migration periods. Additional control measures also might be needed to address multiple intakes on a water body or the presence of regionally important species (*e.g.*, commercially and recreationally valuable species or aquatic organisms ecologically significant to the structure and function of local aquatic communities). See proposed § 125.84(f). In addition, consistent with existing NPDES program requirements, EPA also proposes that the Director must include permit requirements relating to the location, design, construction or capacity of a cooling water intake structure at a new facility necessary to ensure attainment of water quality standards. See proposed § 125.84(g).

EPA invites comments on all aspects of the proposed regulatory framework to implement section 316(b) so as to ensure that individual permit decisions result in the minimization of adverse environmental impact and attainment of water quality standards.

EPA recognizes that the foregoing approach differs significantly from the site-specific approaches used in the past in implementing section 316(b). For example, EPA has not previously attempted to establish minimum flow or velocity requirements for broad classes of water bodies. However, based in large measure on the Agency's experience in attempting to implement section 316(b) on a wholly site-specific basis, the Agency is today proposing this new approach.

The existing case-by-case approach to section 316(b) decision-making has proven difficult to implement for several reasons. A variety of different types of steam electric generating facilities and many different categories of manufacturing facilities (including pulp and paper manufacturers, chemicals and allied products manufacturers, petroleum and coal products manufacturers, primary metals manufacturers, and 14 additional categories) use cooling water and may potentially have cooling water intake structures.

The historical case-by-case approach requires significant resources on the part of the regulatory authorities that must implement section 316(b) requirements. The historical decision-making process requires that each regulated facility must develop, submit, and refine studies that characterize or estimate potential adverse environmental impact. Such studies can take several years to complete and require the support of a multi-disciplinary team. In addition, given the iterative nature of the assessment process, industry as well as EPA regional and State regulatory authorities must expend significant resources assessing study plans and methods for characterizing the environmental impact occurring at each facility and evaluating those data to determine what constitutes BTA for each specific facility. For example, the assessment of data needs and sufficiency might involve site visits, inspections, follow-up information gathering, and study review and modification. The resource requirements of the historical approach have also served as a disincentive to revisiting section 316(b) permit conditions during each renewal (typically every 5 years). Given that most facilities that use cooling water intake structures became operational before 1980, EPA believes this reluctance to fully reconsider permit conditions in light of new technologies is a significant concern. On the other hand, EPA also recognizes that some stakeholders believe that there are advantages to a site-specific approach. These stakeholders believe that the potential for a cooling water intake structure to cause adverse environmental impact, and the specific technology that would best minimize such impacts at reasonable cost is highly dependent on site-specific factors. These include waterbody characteristics, the specific locations of the structure, which species are present, weather, and other relevant factors. These stakeholders believe a site-specific approach such as that which has been used historically may allow stakeholders and permitting authorities to identify technology options for minimizing adverse environmental impact at a particular site at significantly less cost than would be possible through implementation of consistent requirements, within broad environmental categories, stringent enough to minimize adverse environmental impact at all sites. Many industry stakeholders have indicated that in their view the costs of producing comprehensive site-specific studies in support of 316(b) regulatory compliance, while significant, has been money well spent.

The historical case-by-case approach to section 316(b) decision-making also might result in permitting decisions that are less consistent than they would be if national requirements were in place. The case-by-case approach results in less predictability regarding what is or may be required for a particular facility, which makes planning difficult for industry and leaves regulatory agencies uncertain about the appropriate requirements for particular water bodies or facilities. Without Federal regulations, Directors and States must look to Agency guidance and past permit actions to inform their decisions. Absent national requirements, State officials often lack authoritative guidance for their own regulatory efforts. Only a few NPDES-authorized States have specifically addressed cooling water intake structure technology in statutes or regulations. Some States and EPA regions have required significant section 316(b) studies to be performed by facilities, whereas in other cases determinations have been based on limited actual background and ecological data. Some stakeholders believe that the need for consistency and guidance for State officials need not be addressed only through binding regulations. These stakeholders believe that comprehensive guidance, that provides needed technical and methodological support to permit writers and facilities alike can, to a large extent, fulfill the same function while at the same time preserving flexibility to adopt cost effective approaches to minimize adverse environmental impact at a particular site.

EPA has already received suggestions from Stakeholders that the Agency adopt a more case-by-case approach to this proposed rule. Therefore, the

Agency also invites comment on a rule framework that would resemble the framework the Agency proposed in the 1970s. EPA would implement section 316(b) on a case-by-case, site specific basis, but the Agency would establish specific decision criteria that the Director would have to consider when determining the appropriate BTA for minimizing adverse environmental impact. First the Director would determine whether an adverse environmental impact is or is not occurring. If an impact is occurring, the Director would consider a number of factors in determining what would constitute BTA and whether the facility is minimizing adverse environmental impact from cooling water intake structures. Regulatory language like the following could be used to implement this approach:

The director must determine whether a cooling water intake structure is minimizing adverse environmental impact based on the consideration of:

(1) The composition and vulnerability of the biological communities within the cooling water intake structure's zone of influence;

(2) The importance of the source water body to the surrounding biological community, including the presence of spawning sites, nursery/forage areas, and areas necessary for critical stages in the life cycle of aquatic organisms;

(3) Potential impingement of aquatic organisms based on the design intake velocity;

(4) Potential entrainment of small aquatic organisms based on the intake water flow;

(5) Existing or potential recreational, commercial, and subsistence fishing, including finfishing and shellfishing;

(6) Other factors relating to the adverse environmental impact of the intake, as may be appropriate.

EPA invites comment on the case-by-case approach to determine BTA for minimizing adverse environmental impact.

One variation on this approach that might well balance the need to provide clarity and consistency with the need to allow for some site-specific flexibility would be to establish a rebuttable presumption that the requirements of the proposed rule (or some other set of uniform national requirements based on this proposal) reflect BTA, but then allow a new facility, at its option and with the full burden of proof resting on the facility, to provide a demonstration that due to site-specific conditions at the site some alternative technology or suite of technologies would minimize adverse environmental impact. Under this approach, the facility would be required to demonstrate during the permit proceeding that the facility will minimize adverse environmental impact without complying with some or all of the proposed requirements relating to flow, intake velocity, and additional design and construction technologies. Requests for alternate technology requirements would need to be accompanied by data and information that demonstrate clearly and conclusively that the facility will minimize adverse environmental impact without complying with the proposed requirements. If EPA were to adopt this approach, EPA would provide guidance to facilities and permit writers on available alternative technology requirements and the type of site-specific conditions under which they may be appropriate to minimize adverse environmental impact, and on factors to consider in determining whether a proposed set of alternative requirements would minimize adverse environmental impact. EPA would also address the type of documentation facilities would need to provide in order to support a request for alternative technology requirements based on site-specific conditions.

If EPA adopted such an approach, language such at the following would be added to the regulation:

It shall be presumed that the requirements of § 125.84(a) through (e) reflect the best technology available for minimizing adverse environmental impact for all facilities to which this regulation applies. However, any new facility subject to these regulations may request that alternative technology-based requirements be imposed in the permit based on site-specific conditions. Alternative requirements shall be approved only if:

(1) There is an applicable requirement under § 125.84(a) through (e);

(2) Data and information specific to the facility and the affected environment demonstrate clearly and convincingly that the facility will minimize adverse environmental impact by complying with the alternative requirements; and

(3) The alternative requirements will ensure compliance with sections 208(e) and 301(b)(1)(C) of the Clean Water Act.

The burden is on the facility requesting the alternative requirements to demonstrate clearly and convincingly that they will minimize adverse environmental impact and that the other requirements of (1) through (3) above are met.

This rebuttable presumption framework might also be integrated with components of the other options for site-specific flexibility as suggested by some stakeholders and discussed in this preamble, including the option of allowing some kind of balancing of costs with environmental benefits as part of the demonstration that an alternative technology would minimize adverse environmental impact and/or allow restoration or mitigation as part of a site-specific BTA determination. EPA requests comment on the rebuttable presumption approach and how it might best be implemented. Specifically, EPA requests comment on types of site-specific conditions under which alternative technology requirements may be appropriate to minimize adverse environmental impact, factors that should be considered in determining whether a proposed set of alternative requirements would minimize adverse environmental impact, and specific methodologies for assessing adverse environmental impact.

In addition to today's proposal, EPA is considering an alternative based in whole or in part on a zero-intake flow (or nearly zero, extremely low-flow) requirement commensurate with levels achievable through the use of dry cooling systems. Under this alternative, a zero or nearly zero-intake flow requirement based on the use of dry cooling systems would be the primary regulatory requirement in either (1) all waters of the U.S.; (2) within tidal rivers, estuaries, and the littoral zone of freshwater rivers, lakes reservoirs and oceans; or (3) within tidal rivers, estuaries, and within or near the littoral zone of freshwater rivers, lakes, reservoirs and oceans. The Agency is also considering subcategorizing the new facility regulation based on types or sizes of new facilities and location within regions of the country since climate may be one factor affecting the viability of dry cooling technologies. In this scenario, the Agency would require flow rates commensurate with use of dry cooling systems for certain types or sizes of new facilities, and/or new facilities in certain locations, based on the costs, efficiency, and consumption of energy that may be associated with reducing withdrawals from waters of the U.S. to a level commensurate with those achieved by dry cooling systems.

Dry cooling systems (towers) use either a natural or mechanical air draft to transfer heat from condenser tubes to air. In wet cooling systems that employ conventional wet cooling towers, cooling water that has been used to cool the condensers is pumped to the top of a cooling tower; as the heated water falls, it cools through an evaporative process and warm, most air rises out of the tower, often creating a vapor plume. Hybrid wet-dry cooling towers employ both a wet section and dry section and reduce or eliminate the visible plumes associated with wet cooling towers.

Dry cooling towers have several advantages over wet cooling towers. They do not consume water through evaporation, have no wastewater discharge to affect water quality, do not

cause drift of salt or other minerals, do not require the use and subsequent treatment of water conditioning chemicals or biocides, and do not create a vapor plume. Further, as plants employing dry cooling systems have no cooling water needs, they can be located near or in cities and other areas with great demand for electricity irrespective of the availability of large supplies of cooling water, thereby reducing costs and power losses associated with transmitting electricity over long distances. Dry cooling systems reduce the impingement and entrainment of aquatic organisms associated with cooling water use. For example, the State of New York estimates that compared to a wet/dry hybrid cooling system, use of a dry cooling system at a recently permitted 1,080 MW electricity generating facility would reduce projected annual fish mortality at the facility from 24,500 to 1,000 American Shad, from 1.9 million to 76,000 River Herring, from 1,200 to 50 Striped Bass, and from 23,000 to 950 White Perch.[37]

On the other hand, as dry cooling systems use air rather than water for cooling, dry cooling systems are generally less efficient than wet cooling systems. Dry cooling systems perform most efficiently in colder climates, where the temperature differential is greater between the process water and the air used for cooling, and are generally less efficient in warmer climates, though EPA is aware that such systems are currently operating under desert conditions where air temperatures frequently exceed 100°F for extended periods. Because dry cooling systems exhibit lower cooling efficiencies than wet systems, a dry cooling system would be larger than a wet system with a comparable cooling capacity. For example, a recent application filed with the State of New York for a 1000 MW power plant indicated that two air-cooled condensers would be needed to meet the cooling needs of the proposed project, each one approximately 160 feet by 430 feet and approximately 105 feet tall. For a wet-dry hybrid cooling system, two cooling towers would be needed, each one approximately 50 feet by 300 feet and 60 feet tall.[38]

Dry cooling systems can cost as much as three times more to install than a comparable wet cooling system. Dry cooling system operating costs have been reported to range from less than or comparable to wet systems to two or more times higher. For example, the Astoria Energy LLC Queens application filed with the State of New York indicated that a dry cooling system would cost $32 million more to install than a hybrid wet-dry cooling system and $29 million more than a once-through cooling system for a proposed 1000 MW plant. Operating costs would be $30 million less for the dry cooling system than the hybrid wet-dry system, and $19 million more than for a once-through cooling system.[39] The State of New York estimates that use of a dry cooling system at the recently permitted 1,080 MW Athens Generating Company facility would cost approximately $1.9 million more per year, over 20 years, than a hybrid wet-dry cooling system for a project with a total projected cost of approximately $500 million. In addition, dry systems generally are perceived to impose an energy penalty as compared to wet cooling systems. However, there is some uncertainty regarding the precise energy costs or penalty associated with the different types of cooling systems. For example, at the Athens Generating Company facility, New York State officials estimate a 1.4 to 1.9 percent reduction in overall plant electrical generating capacity as a consequence of using a dry cooling system versus a hybrid wet-dry system.[40] By contrast, the Astoria Energy Queens facility application estimates that a dry cooling system would save approximately 0.5 percent in energy costs as compared to a hybrid wet-dry cooling system. Other factors, including climatic conditions, may affect energy costs associated with a particular type of cooling system. It has been reported that plants using wet cooling systems in warm climates export more power than comparably sized plants using dry cooling systems. Likewise, a study of a pulverized coal plant in Denmark found net heat conversion efficiencies of 45.9 percent and 44.5 percent for the plant configured with a wet cooling tower and dry cooling tower respectively. This corresponds to an average energy penalty of about 3 percent for the dry cooling tower relative to the wet cooling towers.[41] Changes in energy consumption associated with dry cooling would result in changed fuel consumption and therefore may result in changed emissions of greenhouse gases.

The Agency is aware that at this time dry cooling systems are currently in use at over 60 electrical generation facilities world wide; over 50 of these facilities are in North America. Moreover, plants using dry cooling demonstrate a considerable variety in prime mover technology including combined cycle, co-generation, and steam turbine, as well as diversity in fuels used including coal, wood, methanol, natural gas and waste. The operational facilities range in size from 1 MW to a 645 MW facility. In addition, two facilities using dry cooling have been recently permitted but are not yet operational, one with a 580 MW capacity, the other (Athens Generating Company) with a 1,080 MW capacity. Further, EPA has information that applications for nine additional plants using dry cooling systems are pending. These plants range in capacity from 170 MW to 1,100 MW.

At this time the Agency does not have sufficient information to make a decision on whether to implement a zero or near zero intake-flow requirement that would effectively require the use of dry cooling technology. EPA is inviting comment on factors which may favor or disfavor the use of dry cooling systems including any cost information associated with any of these factors. The Agency also invites comment on whether and how dry cooling could be a basis for BTA requirements. In particular, the Agency invites comment on whether the Agency should consider subcategorizing facilities proposed for regulation today and requiring flows based on dry cooling for those facilities of a certain size or in certain locations where dry cooling is a viable technology at an economically practicable cost. For example, for the types and sizes of facilities in areas where dry cooling has been employed at facilities in operation, permitted, or slated for construction, the Agency might determine that dry cooling is the best technology available to minimize adverse environmental impact. EPA also invites comment on regulatory approaches of this type based on hybrid wet-dry cooling rather than dry cooling.

In developing the regulatory framework proposed today, EPA considered an alternative under which

[37] NYDEC, Interim Decision, Athens Generating Company, State of New York Department of Environmental Conservation, No: 4–1922–00055/00001, SPDES No: NY–0261009, June 2, 2000.

[38] Astoria Energy LLC Queens, New York Facility, Application for Certification of a Major Electric Generating Facility Under Article X of the New York State Public Service Law, Volume 1, June 2000.

[39] Astoria Energy LLC Queens Facility Application.

[40] NYDEC, Initial Post Hearing Brief, Athens Generating Company, L.P., State of New York, Department of Environmental Conservation, Case No. 97–F–1563, June 28, 1999.

[41] Gordon R. Couch, ''Coal-fired Power Generation—Trends in the 1990s,'' IEA Coal Research, London, UK, 1997.

facility operators might have the flexibility to ''trade'' among components of BTA to potentially achieve equivalent reductions in adverse environmental impact at lower cost. For example, a facility operator who reduced flow below the requirements specified in today's proposal might then have the opportunity not to reduce velocity as specified, or to install fewer additional design technologies. The Agency invites comment on all aspects of an approach that would allow trading among the components of BTA.

EPA also is considering a regulatory framework that would apply the BTA requirements proposed for estuaries and tidal rivers to all facilities, regardless of their location. This would ensure that the same stringent controls are the nationally applicable minimum for all water body types. In addition, all facilities would have to implement technologies that maximize the survival of impinged adult and juvenile fish and minimize the entrainment of eggs and larvae, and comply with additional requirements established by the Director. Some stakeholders assert that an approach that establishes a uniform, stringent set of national BTA requirements is the only one permissible under section 316(b) as all parts of all waters of the U.S. require stringent BTA requirements in order to minimize adverse environmental impact. These stakeholders believe that section 316(b) is wholly technology-based, that cooling towers are the best technology available for minimizing adverse environmental impact, and that therefore, cooling towers must be the basis for BTA requirements nationally.

EPA invites comment on all aspects of the regulatory framework and the other approaches discussed herein.

Some stakeholders have suggested an alternative regulatory framework in which section 316(b) implementation is accomplished through site-specific examination of the risk of adverse environmental impact and (assuming the cooling water intake structure poses some reasonable risk of adverse environmental impact) site-specific evaluation of potential BTA technologies.

Under one approach, the framework of the site-specific alternative would consist of three tiers. In Tiers 1 and 2, the facility, in consultation with the Director, would assess the potential for risk of adverse environmental impact associated with the proposed cooling water intake structure. Tier 1 would be both a screening and an assessment tier that relies on existing information that is site-specific or relevant to the adverse environmental impact determination. Tier 2 would focus on collection and analysis of additional information collection activities, as necessary, to make the adverse environmental impact determination. In Tier 3, which would assume that the Director has found that the cooling water intake structure is reasonably likely to pose risk of adverse environmental impact, the facility would assess BTA alternatives, including an evaluation of costs and benefits. In each tier, the facility would bear the burden of generating data and analyses.

In Tier 1, the facility would examine the risk of adverse environmental impact using certain types of existing information, such as fisheries management data, multimetric biocriteria results, operational and design specifications for the proposed cooling water intake structure, or other pertinent and reliable information. The initial steps in the Tier 1 analysis would be (1) review of cooling water intake structure design and proposed operations, (2) selection of ''designated important species,'' (3) definition of a study population of designated important species, and (4) identification of existing or readily available information sources.

Selection of designated important species would be site-specific, taking into consideration such factors as the species' likely involvement with the cooling water intake structure and the representativeness of the species in relation to the aquatic community. Selection of designated important species would consider commercially and recreationally important species, listed threatened and endangered species, species otherwise identified for protection or management, and food web species.

Based on existing information (where existing information is scientifically valid and adequate to evaluate the potential effects of the cooling water intake structure), including an assessment of the planned cooling water intake structure's characteristics, its geographic/hydrological setting, the nature of the biological community, or other factors, the facility would make an initial determination as to whether the information is adequate, representative, and indicative of a low risk of adverse environmental impact. If the Director agrees that there is a low risk, the proposed cooling water intake structure would be BTA. If the Director finds the existing information insufficient or finds that the risk of adverse environmental impact is not low, the facility would proceed to Tier 2.

In determining whether there is a risk of adverse environmental impact, the Director would consider the appropriate level of biological significance to the individual species, which would generally be the population level. The Director would consider whether the cooling water intake structure effects pose a risk to the viability of the designated important species populations and their ability to support existing ecosystem functions. This would include adequate protection of (1) the structure and function of the aquatic community, (2) commercially and recreationally important species, and (3) threatened or endangered species.

In Tier 2, the facility would conduct field studies for one of two purposes, following two separate tracks. In Track A, a facility might conduct special studies to provide adequate information to make a Tier 1 determination of its reasonable potential to cause adverse environmental impact. In Track B, the facility might conduct information collection activities (such as population modeling), as necessary, to make a Tier 2 determination as to whether the cooling water intake structure is reasonably likely to cause adverse environmental impact. The facility would have primary responsibility for study design and implementation, subject to securing approval of the Director prior to commencing any study. The facility would have the option of volunteering to perform restoration measures and having those measures taken into account in evaluating the risk of adverse environmental impact.

If a facility completes Tier 2 and the Director determines that the proposed cooling water intake structure is not reasonably likely to cause adverse environmental impact, the cooling water intake structure would reflect BTA. If, on the other hand, a facility completes Tier 2 and the Director determines that the proposed cooling water intake structure is reasonably likely to cause adverse environmental impact, in Tier 3 the facility would assess a reasonable range of BTA alternatives. Facilities would have the opportunity to evaluate potentially feasible cooling water intake structure technologies to address the specific adverse environmental impact, and also would have the opportunity to develop new cooling water intake structure technologies. At its option, a facility could perform a benefit/cost analysis of the BTA candidate technologies. Otherwise, it could decide to offer a cooling water intake structure technology or technologies as BTA based on an initial performance assessment of their characteristics. If a facility proceeds with the cost/benefit analysis, BTA would be determined

through application of a ''reasonably proportional'' standard. Also, the facility could propose restoration measures to address the adverse environmental impact that could be used in place of, or as a supplement to, BTA.

Another site-specific approach suggested by stakeholders would allow new facilities applying for NPDES permits to have the option of performing studies necessary to make a site-specific BTA determination. This approach is comparable to the ''rebuttable presumption'' approach described above. The extent and nature of such studies would be determined by the proposed location of the cooling water intake structure vis-a-vis the location factors EPA has proposed as indicative of sensitivity. Proponents of this approach suggest that general study design requirements appropriate for different types of water bodies (*i.e.*, freshwater rivers, lakes, reservoirs, estuaries and tidal rivers, oceans, and the Great Lakes) and EPA could develop proposed intake structure locations, using information provided by state-of-the-art studies as conducted by the regulated community, research and academic institutions, government agencies, and others.

Under this alternative suggested by stakeholders, studies would be designed to predict likely entrainment and impingement effects, along with other environmental effects associated with a proposed cooling water intake structure configuration. The study would assess whether those predicted effects are of a magnitude such that the Director can conclude, after considering guidance that EPA would prepare, that the effects are not reasonably likely to be ''adverse'' to the affected aquatic population or community. In situations where the Director is unable to conclude, with reasonable certainty, that there is no reasonable likelihood of adverse environmental impact from the proposed cooling water intake structure configuration, he or she would compare the performance of the proposed alternative to the predicted performance of other reasonably available technologies relative to the design, location, construction, and capacity of the cooling water intake structure. The Director would also assess the costs and benefits (including the costs and benefits associated with other environmental effects) of those alternatives whose performance is comparable to that of the proposed alternative and would select as ''BTA'' that technology or technologies whose costs and benefits are reasonably related, taking into account the level of uncertainty in the available data. Consistent with this approach, EPA could develop guidelines for performing cost/benefit analyses that would minimize the need to collect extensive new data to characterize the value of resources for which there is not an existing market. These guidelines would facilitate reasonably consistent, cost-effective decisions under this approach.

This approach is premised on the conclusion that national standards and locational attributes alone cannot properly account for biological factors, which are inherently site-specific and that the best technology available for minimizing adverse environmental impact location also is site-specific. The stakeholders advocating this approach point out that among the factors that differ from site to site are the risk of entrainment and impingement posed by a given cooling water intake structure to different aquatic species and different life stages; site-and species-specific factors that affect the sensitivity of aquatic populations and communities to entrainment and impingement; the need to balance the possible benefits, at the population or community level, of reducing entrainment or impingement of a given species or life stage versus possible adverse effects of the same technology on other species or life stages; the need to consider and balance potential benefits (and costs) of the proposed cooling water intake structure technologies to aquatic resources versus potentially adverse (or beneficial) effects of those technologies on other aspects of the environment; and the possibility that the specific performance requirements imposed by EPA would preclude use of the most environmentally and economically cost-effective technology in some cases. It has also been suggested that today's proposed framework contains unnecessarily redundant measures for minimizing impingement and entrainment, and that in the past, including in previous rules and in guidance, EPA recognized the necessity of considering these factors on a site-specific basis.

Finally, it has been suggested that such an alternative will neither delay permitting of new facilities nor impose an undue burden on State and Federal permit writers, especially if EPA develops national guidance on the key issues (*e.g.*, the nature of adverse environmental impact, the nature and extent of site-specific effects studies, and cost/benefit analytical issues) that will ensure timely decisions and an appropriate level of consistency.

EPA requests comment on all aspects of the foregoing alternatives, and will give full consideration to each as it develops the final rule.

2. Location

EPA has long recognized that the location of a cooling water intake structure is one of the key factors that affects the environmental impact caused by the intake structure. When cooling water is withdrawn from sensitive biological areas, there is a heightened potential for adverse environmental impact and therefore a heightened concern. EPA has attempted in this proposal to identify the areas that are most biologically productive or otherwise sensitive and to ensure that the appropriate suite of technologies is applied to minimize adverse environmental impact in those areas.

The optimal design requirement for location is to place the inlet of the cooling water intake structure in an area of the source water body where impingement and entrainment effects on organisms are minimized (taking into account the location of the shoreline, the depth of the water body, and the presence and quantity of aquatic organisms or sensitive habitat). Although the most effective way to minimize adverse environmental impact associated with cooling water intake structures is to locate intakes away from areas with the potential for high productivity, the Agency recognizes that this is not always possible. Cooling water intake structures at new facilities located inside these sensitive areas would generally require controls to minimize adverse environmental impact.

EPA is proposing to require expansive BTA requirements in tidal rivers, estuaries, and the ''littoral zone'' of freshwater rivers, lakes, and reservoirs. In oceans, EPA is using the term ''littoral zone'' broadly to include the ''euphotic'' areas of ''neritic'' waters. These areas are the most productive of ocean environments. Neritic waters are those over the continental shelf, and they include the areas of marine fish and mammal migration. The euphotic zone of neritic waters includes those areas that are sufficiently shallow and clear to allow for light penetration sufficient to support primary productivity. The Agency proposes to define the term ''littoral zone'' to mean any nearshore area in a freshwater river or stream, lake or reservoir, or estuary or tidal river extending from the level of highest seasonal water to the deepest point at which submerged aquatic vegetation can be sustained (*i.e.*, the photic zone extending from shore to the substrate receiving one (1) percent of incident light); where there is a

significant change in slope that results in changes to habitat and/or community structure; and where there is a significant change in the composition of the substrate (*e.g.*, cobble to sand, sand to mud). In oceans, the littoral zone encompasses the photic zone of the neritic region. The photic zone is that part of the water that receives sufficient sunlight for plants to be able to photosynthesize. The neritic region is the shallow water or nearshore zone over the continental shelf (see § 125.83). In general, the littoral zone defines the area where the physical, chemical, and biological attributes of aquatic systems promote the congregation, growth, and propagation of individual aquatic organisms, including egg, larvae, and juvenile life history stages. Appendix 1 illustrates a littoral zone defined by the deepest point at which submerged aquatic vegetation can be sustained.

Adverse environmental impact from entrainment can for many species be controlled or minimized in part by addressing factors associated with the location of the intake structure. Placement (horizontal and vertical) in the water body to avoid areas where these species or life stages occur would limit the number of organisms taken into the cooling water intake structure. Placing the intake structure where ambient flows or water body volume are sufficiently large in proportion to the proposed cooling water intake structure to minimize impact also addresses these factors.

For freshwater rivers, the littoral zone is the area along the shoreline that serves as the principal spawning and nursery area for many, but not all, species of freshwater fish. The shoreline habitat typically features both living and abiotic structures and a diverse community of invertebrates and fish. Most of the reproductive strategies of shoreline fish populations are similar to those found in the littoral zone of lakes and reservoirs. The fish of this zone typically follow a spawning strategy wherein the eggs are deposited in prepared nests, on the bottom, and attached to submerged substrate, where they incubate and hatch. As the larvae mature into fry and early juveniles, some species disperse to open water, while most others complete their life cycle in the littoral zone. Because these species do not employ a pelagic reproductive strategy, the eggs and larvae are not readily integrated into the drift component of the water column; this reduces the potential for entrainment. To minimize adverse environmental impact, the deepest open-water channel region of a river that is available for location of an intake structure should generally be used as a source of cooling water except where this area intersects with fish migratory routes.

For lakes and reservoirs, the littoral zone is the portion of the body of water extending from the shoreline lakeward to the deepest point at which submerged aquatic vegetation can be sustained (fringe of existing rooted plants). To minimize adverse environmental impact, the deepest open region of a lake that is available for location of an intake structure would often be the optimal location for cooling water intake, and the cooling water intake flow should not alter the natural thermal stratification of the lake. Natural thermal stratification means the naturally occurring division of a waterbody into horizontal layers of differing densities as a result of variations in temperature at different depths.[42] (Note, however, that such location is not the only mechanism for minimizing adverse environmental impact.)

For estuaries and tidal rivers, the most stringent minimum requirements would apply to the entire water body. The abundance and diversity of aquatic life within the estuarine and tidal river environment (composed of protected bays, sounds, and lagoons) are generally richer than those in any other water body type. These areas provide an abundance of habitat, food, and refuge for the development of the early life stages of the inshore and nearshore aquatic communities, including communities of meroplankton and holoplankton. The vast majority of commercially and recreationally important species of finfish and shellfish caught in the United States use and depend on estuaries and tidal rivers for completing their life cycles. Estuaries and tidal rivers are among the most complex of aquatic habitats, especially with respect to the environmental factors that affect the distribution patterns of fish eggs, larvae, and juvenile life stages. Many estuarine species have pelagic or planktonic larvae whose movement in and around the estuary, as well as vertically within the water column, is affected by the hydrodynamic characteristics of the estuary, environmental factors, and the evolved behavior of the organisms. Factors that affect the location and movement of aquatic organisms within estuaries and tidal rivers include tides and currents, salinity, dissolved oxygen, temperature, and suspended solids. Additionally, weather patterns, both short- and long-term, can influence the movement and location of aquatic organisms in estuaries and tidal rivers. As a consequence, the Agency is proposing, at a national level, to establish the most stringent requirements to minimize adverse environmental impact for all areas within estuaries and tidal rivers. The Agency developed cost estimates for this proposal, using the most comprehensive suite of technologies in all parts of tidal rivers and estuaries and, as discussed below, estimated that these costs would be economically practicable.

For oceans, the littoral zone (which is being defined as the photic zone of the neritic region) is the area outward from the shoreline beyond the low tide level including waters over the continental shelf. Where islands occur in the ocean, a littoral zone would extend out from the low tide level of the island shoreline. In the near and offshore areas, aquatic life is concentrated in convergence zones of major oceanic currents, within reefs, rocky bottoms, hard bottom ledges, and kelp beds.

EPA is proposing requirements based on the proximity of the intake structure to the littoral zone. For freshwater rivers (or streams) and lakes (or reservoirs), the Agency would specify three categories of requirements based on location criteria. The first category would establish requirements for a cooling water intake structure located at least 50 meters outside the littoral zone. Cooling water intake structures that meet this location criterion would have to meet the least stringent set of minimum requirements. The second category would establish minimum requirements for a cooling water intake structure located less than 50 meters outside the littoral zone. The third category would establish minimum requirements for a cooling water intake structure located in the littoral zone. EPA would establish only one set of minimum requirements for cooling water intake structures located in estuaries and tidal rivers. As discussed above, all parts of estuaries and tidal rivers have the potential for high biological productivity; therefore, the most stringent set of requirements and broadest suite of technologies would apply to cooling water intake structures located in these sensitive water body types. For oceans, the Agency is proposing two categories of requirements based on location criteria. One category addresses cooling water intake structures located outside the littoral zone; the other category addresses cooling water intake

[42] Extrapolated from *Academic Press Dictionary of Science and Technology*, ed, Christopher Morris, Academic Press, Inc., San Diego, CA, 1992.

structures located inside the littoral zone.

EPA decided to propose at least 50 meters outside the littoral zone as the location in which the least stringent set of requirements would apply. The Agency has concluded this is appropriate because the greatest numbers of aquatic organisms and their habitat are not typically present 50 meters outside the littoral zone and therefore will not be vulnerable to impingement and entrainment. EPA recognizes that some important species have critical life stage areas at various distances outside of a littoral zone, and solicits public comment on how best to deal with this species and site-specific variability. EPA also is considering distance criteria of 200 meters, 100 meters, and just outside the littoral zone. EPA solicits comment on these alternative distance criteria.

To address concerns about potential implementation issues associated with basing the regulatory requirements on site-specific determinations of the littoral zone, the Agency also is considering establishing a fixed distance from the shoreline instead of a fixed distance from the littoral zone to define the area in which the most stringent minimum requirements would be applicable. EPA solicits comment on the following criteria for distance from the shoreline: (1) 30 percent of the distance from shoreline to the opposing shore (*i.e.,* 30 percent of the water body width) for streams, rivers, lakes, and reservoirs and (2) 500 meters offshore for tidal rivers, estuaries, and oceans. Regulatory language such as the following could be used to implement this approach:

Littoral zone in a freshwater river or stream, lake, or reservoir means the nearshore area that extends 30 percent of the distance from one shoreline to the opposite shoreline (*i.e.,* 30 percent of the width of the waterbody at the point of measurement) and in a tidal river, estuary, or ocean means the nearshore area extending 500 meters from the shoreline.

3. Flow and Volume

As stated previously, flow is one component of capacity and capacity includes the maximum volume of water that can be withdrawn through a cooling water intake structure. Flow and volume are parameters that can be regulated to minimize adverse environmental impact. In particular, the magnitude of entrainment impacts is directly related to the capacity or intake flow (or volume) of cooling water intake structures. The adverse impact that results from entrainment of organisms occurs after the organism has entered the cooling water system, where it may be exposed to elevated temperatures, shearing forces, impact from mechanical equipment, swift changes in pressures, lack of dissolved oxygen, and chemicals. Once organisms are entrained, mortality and injury rates can be high.

One way to minimize the adverse environmental impact from entrainment is to minimize the flow or volume a facility withdraws. Therefore, today's proposed rule includes requirements that would limit cooling water intake design flow or volume at new facilities.

a. Flow Requirements for New Facilities With Cooling Water Intake Structures Located in Freshwater Rivers and Streams

Total design intake flow from all cooling water intake structures at a facility located in a freshwater river or stream must be no more than the lower of five (5) percent of the source water body mean annual flow or 25 percent of the source water 7Q10.

New facilities that have cooling water intake structures located in freshwater rivers or streams would have to meet a flow requirement that would limit the proportion of the design intake flow withdrawn by the facility compared to the flow of the water body in which the intake is located. Proposed § 125.84(b). Two proportional requirements are being proposed, and facilities would be required to meet the more stringent of the two.

The first of these requirements would limit the total design intake flow from all cooling water intake structures at the facility to five (5) percent of the annual mean flow of the water body. As previously noted, entrainment impacts of cooling water intake structures are closely linked to the amount of water passing through the intake structure because the eggs and larvae of many aquatic species are free-floating and may be drawn with the flow of cooling water into an intake structure. The five percent requirement would establish a maximum level for entrainment effects that, in all areas within 50 meters of the littoral zone, would be further reduced by additional requirements (such as requirements to reduce cooling water withdrawals, and additional design and construction technologies to further reduce impingement and entrainment). EPA estimates that the combination of these requirements (and the design intake velocity limitation for reducing impingement in almost all waterbody types) should result in protection of greater than 99 percent of the aquatic community from impingement and entrainment. This combination of requirements to establish a minimum level of protection for aquatic communities is analogous to the process employed by EPA's water quality-based regulatory programs for developing the necessary levels of protection to protect aquatic communities within the water body as a whole where impacts may occur. These requirements provide the minimum level of protection for designated uses that reflect the goals in section 101(a) of the CWA, *i.e.,* ''protection and propagation of fish and shellfish and wildlife and recreation in and on the water.'' As described elsewhere, the Director would have authority under this proposal to impose additional requirements on a site-specific basis in certain circumstances should the requirements proposed today not protect aquatic life from adverse environmental impact.

The Agency has considered other design intake flow levels in developing this proposal, including 1 percent, 10 percent, and 15 percent of the mean annual flow of the waterbody. With the exception of the 1 percent level, EPA concludes these levels would result in decreased protection. EPA solicits comment on these alternatives to five percent of the annual mean flow.

The second part of the flow requirement would limit the proportion of the total design intake flow to 25 percent of the source water body's 7Q10 flow. The 7Q10 is the lowest average seven-consecutive-day low flow with an average recurrence frequency of once in 10 years determined hydrologically. EPA estimates that limiting the proportion of a river or stream to 25 percent of the 7Q10, in conjunction with the other requirements proposed today, also should protect more than 99 percent of aquatic communities from adverse environmental impact. As explained above, this flow requirement, in combination with other requirements, would establish a minimum level of protection for aquatic communities analogous to that employed by EPA's water quality-based regulatory programs. The Agency invites comment on the use of other low-flow protection requirements, including a requirement that would limit cooling water intake structure capacity to 10 percent, 15 percent, 25 percent, or 35 percent of the 7Q10 low flow.

EPA has analyzed the potential siting implications of the proposed flow requirements and has determined that within the United States approximately 104,000 river miles have sufficient flow to support the water usage needs of large manufacturing facilities withdrawing up to 18 million gallons of water per day (MGD). Approximately 47,000 river miles could support a large nonutility power-producing facility

withdrawing 85 MGD, and approximately 18,000 river miles could support a large utility plant requiring 700 MGD. Under today's proposed rule, large new facilities needing additional cooling water in other areas would need to supplement withdrawals from waters of the U.S. with other sources of cooling water, or redesign their cooling systems to use less water.

As another gauge of the siting impacts of the proposed flow requirement for new facilities, the Agency determined that 89 percent of existing non-nuclear utility facilities (from a 1997 database of the Energy Information Agency and a 1994 Edison Electric Institute database) would be able to be sited at their current location under today's proposed requirements if they also operated in compliance with the flow reduction requirements proposed today. (Please note that the Agency does not intend to prejudge or signal in any way whether its proposed rule for existing facilities will or will not include capacity limitations commensurate with a level that could be attained by a recirculating cooling water system. The purpose of the analysis was to determine whether today's proposed flow requirements would unreasonably limit siting alternatives for new facilities only.)

Finally, to further examine the potential siting implications of today's proposal for new facilities, the Agency reviewed data on water use by existing facilities in arid regions of the country. The Agency found that 80 percent of the existing facilities in Arizona, California, Nevada, New Mexico, Oklahoma, and Texas do not use waters of the U.S. in their operations, suggesting that new facilities in these areas would similarly use waters other than waters of the U.S. in their operations. Therefore, they would not be affected by today's proposal if they were being constructed as new facilities subject to the rule.

Based on these analyses, the Agency is proposing flow requirements as an economically practicable component of requirements for BTA to minimize adverse environmental impact.

b. Flow Requirements for New Facilities With Cooling Water Intake Structures Located in Lakes and Reservoirs

Total design intake flow from all cooling water intake structures at a facility located in a lake or reservoir must not alter the natural thermal stratification of the water body.

EPA is proposing that cooling water intake structures located in lakes or reservoirs not alter the natural thermal stratification of the water body. Proposed § 125.84(c). Under natural conditions the water in lakes and reservoirs is seasonally stratified: The coldest water is on the bottom, and the warmest water is at the surface. EPA proposes to limit the facility's design intake flow to a threshold below which it will not cause the alteration of the thermal (and hence the dissolved oxygen) structure of the lake or reservoir.

EPA is not proposing a proportional flow requirement for these facilities because the volume of the lakes and reservoirs on which they are located typically must be sufficient to accept their heated discharge and still maintain the efficiency of their cooling system. Because lakes and reservoirs typically do not have a strong current or flow, the volume of the water body must be great enough to dissipate the heat so that it is not recirculated back to the facility in its cooling water intake. However, EPA is proposing a requirement to protect the water body from alteration of the natural stratification, which can be caused by withdrawing large amounts of lower-temperature cooling water generally with low dissolved oxygen during the summer months. This would limit the intake flow of facilities that are located on a lake or reservoir to a capacity appropriate for the size of the water body, thus limiting the number of aquatic organisms impinged or entrained from the same water body.

The flow requirements specified in today's proposal are adequate to protect most lakes and reservoirs. However, EPA recognizes that there are unique situations, such as the Great Lakes, in which there are site-specific factors that may warrant more stringent requirements (as determined by the Director) to minimize adverse environmental impact. One of the primary concerns with lakes and reservoirs is that the withdrawal of cooling water should not alter the natural thermal stratification of the water body. Since the volume of water in the Great Lakes is quite large compared to the amount of water withdrawn for cooling purposes, it is highly unlikely that the thermal structure of these lakes would be influenced by cooling water withdrawals. However, the Great Lakes, like estuaries, have areas of high productivity and sensitive critical habitats that could be adversely affected by cooling water intake structures. The Agency recognizes that new facilities with cooling water intake structures in such water bodies might need more stringent requirements than those generally proposed here for lakes and reservoirs. Section 125.84(f) would provide the Director the authority under this proposal to address important site-specific factors that lead to the need for additional control measures.

c. Flow Requirements for New Facilities With Cooling Water Intake Structures Located in Estuaries and Tidal Rivers

The total design intake flow from all cooling water intake structures at a facility must be no greater than one (1) percent of the volume of the water column in the area centered about the opening of the intake with a diameter defined by the distance of one tidal excursion at the mean low water level.

EPA is proposing a proportional flow requirement for cooling water intake structures located in estuaries and tidal rivers that limits the total design intake flow to no greater than one (1) percent of the volume of the water column in an area centered about the opening of the intake with a diameter defined by the distance of one tidal excursion at the mean low water level. Proposed § 125.84(d).

The basis for this proposal is similar to that underlying the proposed requirements for new facilities with cooling water intake structures located in freshwater rivers and streams. EPA selected a one (1) percent threshold for estuaries and tidal rivers because they are extremely productive and sensitive biological areas. A more conservative approach is necessary to protect these types of water bodies. However, because estuary volumes are very large, allowing a withdrawal of one (1) percent of an entire estuary would potentially allow for the impingement and entrainment of a very large number of aquatic organisms. Limiting the withdrawal to one (1) percent of a volume defined using the tidal excursion is a more appropriate and conservative approach to minimize adverse environmental impact and would protect 99 percent of the organisms in the area influenced by the cooling water intake structure. As noted above, this requirement in combination with the other requirements would establish a minimum level of protection analogous to water quality protection levels in other EPA programs.

In addition, in natural systems species and populations that are impinged and entrained might not inhabit the entire estuary, or different species might inhabit different parts of the estuary. Therefore, EPA is proposing to use a smaller volume that relates more specifically to the cooling water intake structure and the area it influences. The volume being proposed for comparison to the intake volume is determined using the tidal excursion in the area of the cooling water intake structure. Tidal excursion is a measurement of the distance that a particle travels during

one tidal cycle (see proposed definition at § 125.83). It would include the total of the distance upstream of the cooling water intake structure the particle would travel during the flood tide and the distance downstream it would travel during the ebb tide. By defining distances using the tidal excursion, the requirement would allow for a volume to be delineated by using the tidal excursion distance and drawing a radius (using the midpoint of the excursion distance) from one end of the excursion distance to the other. (See Appendix 2 to Preamble.) EPA invites comment on this approach.

d. Flow Requirements for New Facilities With Cooling Water Intake Structures Located in Estuaries and Tidal Rivers or the Littoral Zone in Other Water Body Types

You must reduce your intake flow to a level commensurate with that which could be attained by a closed-cycle recirculating cooling water system.

The reduction of the cooling water intake structure's capacity is one of the most effective means to reduce adverse environmental impact, especially in or near sensitive biological areas. EPA is proposing that facilities with intakes located in tidal rivers and estuaries; in the littoral zone of lakes, freshwater rivers, or oceans; or less than 50 meters outside the littoral zone of lakes, freshwater rivers, or oceans limit their flow to a level commensurate with that which could be attained by a closed-cycle recirculating cooling water system. Proposed §§ 125.84(b) through (e).

EPA concludes these facilities would require this additional level of control because of their proximity to potentially sensitive and highly productive biological areas. Closed-cycle recirculating cooling water systems are known to reduce the amount of cooling water needed and in turn to directly reduce the number of aquatic organisms taken into the cooling water intake structure. For the traditional steam electric utility industry, facilities located in fresh water areas that have closed-cycle recirculating cooling water systems can, depending on the quality of the makeup water, reduce water use by 96 to 98 percent from the amount they would use if they had once-through cooling water systems. Steam electric generating facilities that have closed-cycle recirculating cooling water systems using salt water can reduce water usage by about 70 to 96 percent when makeup and blowdown flows are minimized.[43]

Today's proposal would require that the intake flow withdrawn by a cooling water intake structure be reduced to a level commensurate with that which can be attained by a closed-cycle recirculating cooling water system by all cooling water intake structures at the facility. That level, in conjunction with the other requirements proposed today, would minimize adverse environmental impact and be economically practicable. Such flow reductions are a necessary component of the technology for minimizing adverse environmental impact in highly productive areas. In addition, EPA cost estimates show that this requirement is available to new facilities on a national level. EPA realizes that makeup water would be required because of losses within the system, including blowdown, evaporation, windage, and drift. The Agency invites comment on the use of a flow reduction requirement that requires the reduction of intake flow to level commensurate with that which can be attained by a closed-cycle recirculating cooling water system that has minimized makeup and blowdown flows.

To examine the extent to which new facilities are likely to reuse and recycle cooling water, the Agency reviewed the engineering databases that support the effluent limitations guidelines for several categories of industrial point sources. In general, this review identified extensive use of recycle or reuse of cooling water in documents summarizing industrial practices in the late 1970s and early 1980s, as well as increased recycling and reuse of cooling water in the 1990s. For example, the reuse of cooling water in the manufacturing processes was identified in the pulp and paper and chemicals industries, in some cases as part of the basis for an overall zero discharge requirement (inorganic chemicals). Other facilities reported reuse of a portion of the cooling water that was eventually discharged as process wastewater, with some noncontact cooling water discharged through a separate outfall or after mixing with treated process water.

This review has documented that recycle and reuse of noncontact cooling water is a common industrial practice to reduce both cooling water usage and overall water usage by manufacturing facilities. Facilities that reuse 100 percent of the water withdrawn from waters of the U.S. for cooling purposes would be considered to have achieved the flow reduction requirements (*i.e.,* reduce intake flow to a level commensurate with that which can be attained by a closed-cycle recirculation cooling water system that has minimized makeup and blowdown flows). In implementing today's proposed rule, EPA would consider reuse to be equivalent to a closed-cycle recirculating system. The Agency invites comment on the proposed approach for considering reuse of cooling water at manufacturing plants in lieu of recirculation as an alternative to meet the flow reduction requirement in today's proposal.

4. Velocity

The velocity of water entering a cooling water intake structure exerts a direct physical force against which fish and other organisms must act to avoid impingement or entrainment. EPA considers velocity to be one of the more important factors that can be controlled to minimize adverse environmental impact at cooling water intake structures.

To develop an appropriate, nationally protective minimum velocity requirement at cooling water intake structures, EPA reviewed available literature, State and Federal guidance, and regulatory requirements and found that a velocity of 0.5 ft/s has been used as guidance in at least three Federal documents.[44 45 46] The 0.5 ft/s threshold recommended in the Federal documents is based on a study of fish swimming speeds and endurance performed by Sonnichsen et al. (1973).[47] This study concluded that appropriate velocity thresholds should be based on the fishes' swimming speeds (which are

[43] The lower range would be appropriate where State water quality standards limit chloride to a maximum increase of 10 percent over background and therefore require a 1.1 cylce of concentration. The higher range may be attained where cycles of concentration up to 2.0 are used for the design.

[44] John Boreman, *Impacts of Power Plant Intake Velocities on Fish,* Power Plant Team, U.S. Fish and Wildlife Service, 1977.

[45] A.G. Christianson, F.H. Rainwater, M.A. Shirazi, and B.A. Tichenor, *Reviewing Environmental Impact Statements: Power Plant Cooling Systems, Engineering Aspects,* U.S. Environmental Protection Agency (EPA), Pacific Northwest Environmental Research Laboratory, Corvallis, Oregon, Technical Series Report EPA–660/2–73–016, October 1973.

[46] Willis King, ''Instructional Memorandum RB–44: Review of NPDES (National Pollutant Discharge Elimination System) Permit Applications processed by the EPA (Environmental Protection Agency) or by the State with EPA oversight,'' *Navigable Waters Handbook,* U.S. Fish and Wildlife Service, February 1973.

[47] John C. Sonnichsen, Jr., B.W. Bentley, G.F. Bailey, and R.E. Nakatani, *A Review of Thermal Power Plant Intake Structure Designs and Related Environmental Considerations,* Hanford Engineering Development Laboratory, Richland, Washington, HEDL–TME 73–24, UC–12, 1973.

related to the length of the fish) and endurance (which varies seasonally and is related to water quality). The data presented showed that the species and life stages evaluated could endure a velocity of 1.0 ft/s. To develop a threshold that could be applied nationally and would be protective of most species of fish and their different life stages, EPA applied a safety factor of two to the 1.0 ft/s threshold to derive a threshold of 0.5 ft/s. EPA recognizes that there are specific circumstances and species for which the 0.5 ft/s requirement might not be sufficiently protective and is aware that alternative requirements have been developed for these situations. For example, the National Marine Fisheries Service and the California Department of Fish and Game have developed fish screening criteria (velocity requirements) for anadromous salmonids that range from 0.33 ft/s to 0.40 ft/s.[48 49 50] There are also species for which a velocity of greater than 0.5 fps would still be protective.

Two velocities are of importance in the design of cooling water intake structures: the approach velocity and the through-screen or through-technology velocity. The approach velocity is the velocity measured just in front of the screen face or at the opening of the cooling water intake structure in the surface water source. This velocity has the most influence on an aquatic organism and its ability to escape from being impinged or entrained by the cooling water intake structure. The through-screen or through-technology velocity is the velocity measured through the screen face or just as the organisms are passing through the opening into another device (*e.g.,* entering the opening of a velocity cap). This velocity is always greater than the approach velocity because the net open area is smaller.

EPA is proposing to use the design intake velocity as a requirement relating to the design and capacity of a cooling water intake structure. The use of a design intake velocity requirement in this manner would ensure that intake structures have a velocity that contributes to minimizing adverse environmental impact. The Agency is proposing that head loss across the screens (or other appropriate measurements for technologies other than intake screens) be monitored and correlated with intake velocity to ensure that the facility is continually maintained and operated to minimize adverse environmental impact. Proposed § 125.87(b).

EPA is proposing to set the velocity requirement at 0.5 ft/s as a design through-screen or through-technology requirement. The Agency is proposing this requirement reflects BTA for the maximum design intake velocity of the cooling water intake structure. The Agency has reviewed the NewGen database and of those facilities potentially in the scope of today's proposed rule, the majority have design intake velocities of 0.5 ft/s or less. Moreover, EPA has determined that a considerable number of facilities that have commenced commercial operation in the past few years have design intake velocities of 0.5 ft/s or less. These currently operating facilities demonstrate that a design intake velocity of 0.5 ft/s is achievable and provides for sufficient cooling water withdrawal. EPA is not proposing the more stringent criteria of 0.33 ft/s and 0.40 ft/s, developed by NMFS and the State of California, respectively, because they would be overly protective for a national BTA requirement; however, they might be appropriate for more sensitive species or if required by the Director for a specific case. The Agency is also concerned that on a national basis a design intake velocity of less than 0.5 ft/s might not be achievable for large-volume withdrawals. In addition to a design intake velocity requirement, EPA would require new facilities to monitor the head loss across the screens or other technology on a quarterly basis. Proposed § 125.87(b). EPA is proposing that head loss across the screens (or other appropriate measurements for technologies other than intake screens) be monitored and correlated with intake velocity once the facility is operating.

The proposed regulation would require that the maximum design intake velocity at each cooling water intake structure at a facility be no more than 0.5 ft/s. Proposed §§ 125.84(b)–(e). The design intake velocity would be defined as the value assigned during the design phase of a cooling water intake structure to the average speed at which intake water passes through the open area of the intake screen or other device against which organisms might be impinged or through which they might be entrained. This is equivalent to the through-screen or through-technology velocity.

Some stakeholders suggest that mandatory, uniform velocity performance requirements are inappropriate as a means of minimizing adverse environmental impact because many site- and species-specific factors influence both the rate at which a given cooling water intake structure impinges aquatic life and the significance of any such impingement.

In particular, these stakeholders suggest that there are sound biological reasons why uniform velocity requirements are not appropriate. For example, these stakeholders point out that fish swim speed varies greatly by species and age of the individual and can also be affected by water temperature. Swimming speed is an important factor in determining the likelihood of impingement because it is a measure of the fishes' ability to escape from the area of the intake. They also point out that vertical and horizontal distribution of organisms in the water column (which might be linked to natural habitat preferences) might influence rates of impingement, as might levels of physiological stress that organisms experience before exposure to the cooling water intake structure.

In addition, stakeholders offer that there are hydrological and locational reasons why uniform velocity performance standards are not appropriate and why velocity standards should be established on a site-specific basis. For example, the risk of impingement at some locations, such as a riverine system, may exhibit a correlation to flow. Moreover, the risk of impingement may vary according to seasonal variations in flow, which may or may not coincide with the spawning/nursery seasons or other times of vulnerability for the potentially affected species. Thus, these stakeholders suggest that case-by-case velocity standards, that take into account the issues identified above, as opposed to mandatory, uniform velocity performance standards, may be a sounder approach for limiting impingement.

The Agency solicits comment on the proposed design intake velocity requirement, as well as on the relationship of swimming speed, other biological factors, and other elements (in addition to velocity) that relate to the risk of impingement. EPA is also considering and requests comment on a less stringent requirement such as 1.0 ft/s, and whether the requirement should be set based on an approach velocity or the through-screen or through-technology velocity. Finally, the Agency requests comment on allowing site-specific determinations of velocity without establishing a uniform national requirement, as discussed above.

[48] NMFS, *Juvenile Fish Screen Criteria,* National Marine Fisheries Service Northwest Region, 1995.

[49] NMFS, *Fish Screening Criteria for Anadromous Salmonids,* National Marine Fisheries Service, Southwest Region, April 14, 1997. Published on the Internet at http://swr.ucsd.edu/hcd/fishscrn.htm.

[50] California Department of Fish and Game, *Fish Screening Criteria,* April 14, 1997.

5. Additional Design and Construction Technologies

EPA is proposing that facilities whose cooling water intake structures are located in the littoral zone implement additional design and construction technologies that minimize impingement and entrainment of fish, eggs, and larvae and maximize survival of impinged adult and juvenile fish. Proposed §§ 125.84(b)–(e). The technologies that would need to be implemented are those that (1) minimize impingement and entrainment of fish, eggs, and larvae and (2) maximize survival of impinged adult and juvenile fish. However, EPA does not propose to mandate the use of any specific technology. Although EPA refers to those technologies as additional design and construction technologies, they are part of the suite of technologies proposed to minimize adverse environmental impact and are additional only in the sense that they would be required in some circumstances in addition to the technologies used to meet the velocity, flow, capacity, or other requirements.

Technologies that maximize survival of impinged organisms include but are not limited to fish-handling systems such as bypass systems, fish buckets, fish baskets, fish troughs, fish elevators, fish pumps, spray wash systems, and fish sills. These technologies either divert organisms away from impingement at the intake structure or collect impinged organisms and protect them from further damage so that they can be transferred back to the source water at a point removed from the facility intake and discharge.

Technologies that minimize impingement and entrainment of fish, eggs, and larvae might include, but are not limited to, technologies that reduce intake velocities so that ambient currents can carry the organisms past the opening of the cooling water intake structure; intake screens, such as fine mesh screens and Gunderbooms, that exclude smaller organisms from entering the cooling water intake structure; passive intake systems such as wedge wire screens, perforated pipes, porous dikes, and artificial filter beds; and diversion and/or avoidance systems that guide fish away from the intake before they are impinged or entrained.

EPA is proposing to require additional design and construction technologies to protect fish, eggs, and larvae when the cooling water intake structure is located inside the littoral zone because this is considered a sensitive area where spawning takes place and critical habitat is present. Such technologies are available to new facilities and further reduce environmental impact resulting from impingement and entrainment.

Because site-specific factors greatly influence the selection among various additional design and construction technologies, EPA proposes that permit applicants subject to this requirement because of the location of their intake structure perform a baseline assessment of the biological community at the proposed location of the cooling water intake structure and submit to the Director for approval a plan for installation and operation of appropriate additional design and construction technologies. Proposed § 125.86(b)(6).

EPA also solicits comment on whether certain minimum technologies might be appropriate in virtually all circumstances and should be required in final section 316(b) regulations. EPA realizes that this approach is a departure from other parts of today's proposal in which the Agency specifically refrains from mandating the use of a specific technology. However, EPA considers comment on this approach to be beneficial. For example, it might be possible to specify that all new facilities install additional design and construction technologies, such as fine-mesh screens, that in conjunction with the proposed velocity requirement would effectively reduce impingement at virtually all locations within or near the littoral zone. Alternatively, the Agency could establish performance standards based on the use of these technologies.

6. What Is the Role of Restoration Measures?

Restoration measures, as used in the context of section 316(b) determinations, include practices that seek to conserve fish or aquatic organisms, compensate for the fish or aquatic organisms killed, or enhance the aquatic habitat harmed or destroyed by the operation of cooling water intake structures. Such measures have been employed in some cases in the past as one of several means of fulfilling the requirements imposed by section 316(b). Examples of restoration measures that have been included as conditions of permits include creating, enhancing, or restoring wetlands; developing or operating fish hatcheries or fish stocking programs; removing impediments to fish migration; enhancing natural resources in an impacted watershed; and other projects designed to replace fish or restore habitat.

Restoration measures have been used, however, on an inconsistent and somewhat limited basis. Their role under section 316(b) has never been explicitly addressed in EPA regulations or guidance. Restoration projects have been undertaken as part of section 316(b) determinations predominantly at existing facilities and in permitting actions where the cost of the proposed technology was considered to be wholly disproportionate to the demonstrated environmental benefits to be achieved. Often such cases have involved situations where retrofitting with a technology such as cooling towers was under consideration.

Given the limits on the ability of direct control technologies (location, flow, velocity, and other requirements) to eliminate environmental harm in all circumstances, EPA is considering a variety of mandatory, discretionary, and voluntary regulatory approaches involving restoration measures. On the other hand, EPA also is considering specifying that restoration measures may not be part of a section 316(b) determination. EPA invites comment on the appropriate role of restoration, in any, under section 316(b).

a. Mandatory Restoration Approaches

Under the first approach that the Agency is considering, the use of restoration measures would be required as an element of a section 316(b) determination in all cases except where a new facility's cooling water intake structure is located at least 50 meters outside the littoral zone in a freshwater river or stream, or outside the littoral zone in a lake or reservoir. Locating cooling water intake structures in these less productive areas, in conjunction with other applicable requirements, generally would minimize adverse environmental impact. All other new facilities with cooling water intake structures would be required to implement some form of restoration measures in addition to implementing direct control technologies to minimize adverse environmental impact. Under this approach, new facilities would first implement the direct control technologies as specified in this proposed rule. They would then develop and implement, in coordination with the Director, a restoration plan that would further reduce and offset unavoidable impacts that remain after the implementation of direct control technologies. This is similar to the mitigation sequence used under CWA section 404, wherein environmental impacts are avoided and minimized prior to consideration of compensatory mitigation measures. The development of restoration measures applicable to a cooling water intake structure would focus on the unique situation faced by each facility and would allow for review

and comment by the permitting agency and the public.

Under this approach, the permit application would define and quantify the need for restoration measures by estimating the adverse environmental impact that would remain after application of the location, design, construction, and capacity requirements specified for the type of water body in which the particular cooling water intake structure would be located. The permit would contain conditions, including a compliance schedule, that would require the permittee to develop and implement the approved restoration plan. Applicants would then assess alternatives for addressing these impacts and develop a draft restoration and monitoring plan for approval by the Director.

If EPA implemented this approach, it would add language to proposed sections 125.84(b)(2), (b)(3), (c)(2), (c)(3), (d)(1), (e)(1), and (e)(2) specifying, ''You must implement restoration measures''. Language such as the following also would be added to proposed section 125.86:

Restoration Measures. If you are required to comply with the requirements in § 125.84(b)(2), (b)(3), (c)(2), (c)(3), (d)(1), (e)(1), or (e)(2) to implement a restoration measure, you must develop a plan based on the results of the Source Water Baseline Biological Characterization required by § 125.86(a) and submit the plan to the Director for review and approval. The plan should document how you propose to implement restoration measures to replace organisms or enhance the habitat for the species that will be most susceptible to impingement and entrainment by the cooling water intake structures. The plan must contain the following:

(i) A narrative description of proposed restoration measures, the impacts from impingement and entrainment expected to remain after the measures have been implemented, and the technical basis for choosing those restoration measures. Include a discussion of the nexus between the estimated impingement and entrainment impacts from the cooling water intake structure and the proposed measures.

(ii) Design and engineering calculations, drawings, maps, and costs supporting the proposed restoration measures.

Beyond this framework, EPA invites comment on the process for developing and implementing the restoration plan or the content of a plan. The following example illustrates one possible process and set of substantive contents. The draft plan could be required to include an evaluation component and study that would be submitted to the permitting agency and natural resource agencies, and be made available to the public, before permit issuance. This draft plan would then be distributed to other agencies with relevant expertise for review and comment. The public also would be informed of the availability of the plan for review and comment. After considering comments provided by relevant agencies and the public, the applicant would develop a final plan and a response to comment document, which would be submitted to the Director for approval. Upon approval, the applicant would implement the restoration plan, including providing regular reports to the permitting agency and periodically verifying progress toward achieving the specific restoration goals included in the plan. The duty to develop and implement a restoration plan would be the permit applicant's.

Alternatively, EPA could require facilities to study the extent of impingement and entrainment after the actual implementation of direct control technologies, and require the development of a draft plan that addressed the study results in a manner similar to the approach described above.

b. Discretionary Restoration Approaches

A second approach would provide the Director with the discretion to specify appropriate restoration measures under section 316(b), but would not require that he or she do so. Under one version of this approach, restoration measures would be allowed in permitting new facilities only where the facility could demonstrate that the costs incurred to implement direct controls exceed a specified cost test. (See section VIII.C for discussion of the cost tests that are under consideration.) This approach is consistent with several precedents in which the permitting authority allowed the use of restoration measures where the cost to retrofit an existing facility's cooling water intake structures with control technologies was determined to be wholly disproportionate to the benefits the control technology would provide (*e.g.*, John Sevier, Crystal River, Chalk Point, Salem).[51]

A second version of this approach would allow, but not require, the Director to specify restoration measures to reduce the net level of impingement and entrainment so that adverse environmental impact caused by cooling water intake structures would be minimized. Under this approach, the use of restoration measures would supplement the imposition of performance requirements and direct controls. The performance requirements and direct controls would need to be implemented before restoration measures would be imposed.

c. Voluntary Restoration Approaches

Stakeholders have suggested a third type of restoration approach, under which the Director could consider restoration measures proposed voluntarily by permit applicants in the context of determining the extent to which location, design, and capacity requirements could be modified to reflect site-specific conditions while still ensuring that adverse environmental impact is minimized. Under this alternative, restoration measures could substitute for location, design, and capacity requirements, partially or completely, in appropriate cases. The need for restoration measures would be determined based on the magnitude of the environmental impact associated with the cooling water intake structure and the optimal balance between the use of direct controls and restoration measures to minimize the impact. Appropriate conditions relating to the voluntary restoration measures would be included in the permit. Such an approach would be designed to provide flexibility to the Director, the regulated community, and other interested parties to address the issues posed by cooling water intake structures on a site-specific, priority basis. This approach might result in incentives for permittees to develop more far-reaching projects, potentially providing benefits to a larger portion of a watershed and a broader range of aquatic and other species, and for longer periods of time.

Finally, stakeholders also have suggested that voluntary restoration measures should be applied to mitigate the effects of cooling water intake structures so that there is no basis for a determination of adverse environmental impact. They suggest that likewise, the statute does not preclude the consideration of the anticipated benefits from proposed restoration measures in evaluating the extent to which additional technology may be necessary, nor does it preclude the consideration of benefits associated with restoration measures implemented pursuant to previous permits, together with other relevant data, in evaluating whether adverse environmental impact currently exists.

Under any approach, there would be a nexus between the restoration measures employed and the adverse

[51] In re Tennessee Valley Authority John Sevier Steam Plant, NPDES Permit No. TN0005436 (1986); In re Florida Power Corp. Crystal River Power Plant Units 1, 2 & 3, NPDES Permit FL0000159 (1988); Chalk Point, MDE, State of Maryland, Discharge Permit, Potomac Electric Power Co., State Discharge Permit No. 81–DP–0627B, NPDES Permit No. MD0002658B (1987, modified 1991); Draft NJDEP Permit Renewal Including Section 316(a) Variance Determination and Section 316(b) BTA Decision: NJDEP Permit No. NJ0005622 (1993).

environmental impact caused by a cooling water intake structure. For example, if after implementation of direct control technologies an important species in the vicinity of the cooling water intake structure continues to be adversely affected by a cooling water intake structure, appropriate restoration measures would address the adverse effects on that species, perhaps through enhancement of other factors that affect the target species' ability to thrive or as a last resort, replacement of the fish killed or harmed.

Restoration plans could potentially use a ''banking'' mechanism similar to that used in the CWA section 404 program, that would allow the permittee to meet restoration requirements by purchasing ''credits'' from an approved ''bank.'' For example, should wetlands restoration be an appropriate mechanism for offsetting the adverse impact from the cooling water intake structure, the permittee could purchase credits from an existing wetlands mitigation bank. As in the section 404 program, public or private entities could establish and operate the banks. EPA views the use of ''banking'' for the purposes of this proposed rule as one way to facilitate compliance and reduce the burden on the permit applicant, while at the same time potentially enhancing the ecological effectiveness of the required restoration activities.

EPA also is considering an approach under which the use of restoration measures would not be allowed in section 316(b) permitting for new facilities. Critics of mitigation or restoration measures argue, among other things, that they are not effective in compensating for the specific impingement and entrainment losses caused by cooling water intake structures.

EPA requests comment on all aspects of the restoration approaches described in this notice. The Agency does not intend the foregoing discussion of restoration measures to affect any existing statutory, regulatory, or other legal authorities with respect to the use of restoration measures. The Agency also does not intend the foregoing discussion to affect any ongoing permit proceedings or previously issued permits, which should continue to be governed by existing legal authorities. The Agency will address the issue of restoration further as it develops the final rule.

7. Additional and Alternative BTA Requirements

At § 125.84(f), EPA is proposing that the Director have limited, discretionary authority to examine certain enumerated site-specific or unique characteristics and impose additional section 316(b) requirements. Such site-specific conditions would include location of multiple cooling water intake structures in the same body of water, seasonal variations in the aquatic environment affected by the cooling water intake structure controlled by the permit (*e.g.*, seasonal spawning or migration of anadromous fishes such as west coast salmonids), or the presence of regionally important species (*e.g.*, commercially and recreationally valuable species, and fish ecologically important to the structure and function of local fish assemblage such as important forage species).

At § 125.84(g), EPA is proposing that the Director must include any more stringent requirements relating to the location, design, construction, and capacity of a cooling water intake structure at a new facility that are necessary to ensure attainment of water quality standards, including designated uses, criteria, and antidegradation requirements. This proposal is based on section 301(b)(1)(C) of the CWA.

Finally, in developing the nationally applicable minimum requirements that are being proposed today, EPA has taken into account all the information that it was able to collect, develop, and solicit regarding the location, design, construction, and capacity of cooling water intake structures at new facilities. EPA concludes that these requirements reflect the best technology available for minimizing adverse environmental impact on a national level. In some cases, however, data that could affect these requirements might not have been available or might not have been considered by EPA during the development of this proposal. Therefore, the lack of any provision for deviation from nationally applicable BTA requirements could lead to large numbers of petitions requesting EPA to amend the rule as it applies to individual facilities or classes of facilities. This would be an extremely time consuming process for EPA, the regulated community, and other interested parties. Accordingly, EPA is proposing procedures that would allow for adjustment, during permit proceedings, of the requirements of § 125.84 as they apply to certain cooling water intake structures at new facilities.

Proposed § 125.85 would allow the Director, in the permit development process, to set alternative BTA requirements that are less stringent than the nationally applicable requirements. Under § 125.85(a), any interested person may request that alternative requirements be imposed in the permit. The Director also may propose alternative requirements in the draft permit upon making the findings indicated. Proposed § 125.85(a)(2) provides that alternative requirements that are less stringent than the requirements of § 125.84 would be approved only if compliance with the requirement at issue would result in compliance costs wholly out of proportion to the costs considered during development of the requirement at issue, the request is made in accordance with 40 CFR part 124, the alternative requirement requested is no less stringent than necessary, and the alternative requirement will ensure compliance with sections 208(e) and 301(b)(1)(C) of the Clean Water Act.

Because new facilities have a great degree of flexibility in their siting, in how their cooling water intake structures are otherwise located, and in the design, construction and sizing of the structure, cost is the only factor that would justify the imposition of less stringent requirements as part of the proposed alternative requirements approach. This is because other factors affecting the location, design, construction, and capacity of cooling water intake structures at new facilities can be addressed by modifications that may have cost implications. The Agency notes that in the somewhat analogous case of the new source performance standards that EPA establishes for the discharge of effluent from new facilities in particular industrial categories, alternate discharge standards are not allowed. However, because this proposed rule would establish requirements for cooling water intake structures at any type of facility in any industrial category above the flow threshold proposed today, it might be possible, in some instances, that the costs of complying with today's proposed requirements would be wholly out of proportion to the costs EPA considered and determined to be economically practicable. (See Section VIII.C. below, the economic and technical support document, and the economic and financial portions of the record for this proposal.) As discussed at Section VIII.C., EPA has analyzed the cost of compliance with today's proposed requirements for all facilities projected to be built in the reasonably foreseeable future, as well as other types of facilities that might be built at later dates (such as large base-load steam electric generating facilities that do not use combined-cycle technology) and concludes that these compliance costs would be economically practicable for all types of facilities the Agency

considered. However, should an individual new facility demonstrate that costs of compliance for a new facility would be wholly out of proportion to the costs EPA considered and determined to be economically practicable, the Director would have authority to adjust BTA requirements accordingly.

Under proposed § 125.85(a), alternative requirements would not be granted on any grounds other than the cost of compliance, nor would they be granted based on a particular facility's ability to pay for technologies that would result in compliance with the requirements of § 125.84. Thus, so long as the costs of compliance are not wholly out of proportion to the costs EPA considered and determined to be economically practicable, the ability of an individual facility to pay to attain compliance would not support the imposition of alternative requirements. EPA invites comment on whether other factors should be added to proposed § 125.85(a). EPA also requests comment on an additional basis for establishing alternative, less stringent requirements, namely that the costs of compliance would be wholly disproportionate to projected environmental benefits. The 1977 Draft Guidance includes a similar provision. This wholly disproportionate cost test could be provided either instead of, or in addition to, the cost test being proposed today as part of § 125.85(a) (*i.e.*, costs wholly out of proportion to the costs EPA considered in the rule development).

Proposed § 125.85(a) would specify procedures to be used in the establishment of alternative requirements. The burden is on the person requesting the alternative requirement to demonstrate that alternative requirements should be imposed and that the appropriate requirements of § 125.85(a) have been met. The person requesting the alternative requirements should refer to all relevant information, including the support documents for this rulemaking, all associated data collected for use in developing each requirement, and other relevant information that is kept on public file by EPA.

EPA invites comment on all aspects of this proposal for establishing alternative BTA requirements.

Under an alternative approach, EPA would not provide for any deviation from the nationally applicable requirements. Some stakeholders have stated that the Clean Water Act requires that uniform BTA requirements be applicable nationally. Opponents of deviation from uniform national BTA requirements also believe that alternative requirements are especially inappropriate for new facilities, which they believe can be designed and sited to take the requirements of the new facility rule into account. EPA also invites comment on this alternative approach.

8. Other Approaches Being Considered by EPA

In addition to or in lieu of today's proposal for alternative BTA requirements (discussed above), EPA also is considering an approach that would require the Director to consider whether individual facilities might have site-specific characteristics that make one or more of these national BTA requirements insufficient to minimize adverse environmental impact. Such site-specific characteristics might include location of multiple cooling water intake structures in the same body of water, seasonal variations in the aquatic environment affected by the cooling water intake structure controlled by the permit (such as seasonal spawning or migration), the presence of regionally important aquatic organisms, or other relevant characteristics. If the Director determined that one or more of the national requirements does not minimize adverse environmental impact, the Director would be required to impose such additional measures as might be needed to ensure that the facility employs the best technology available for minimizing adverse environmental impact. Regulatory language such as the following could be used to implement this approach:

> The Director must consider whether individual facilities have site-specific characteristics that make one or more of the cooling water intake structure BTA requirements in § 125.84(a)–(e) insufficient to minimize adverse environmental impact. If the Director finds that the requirements of § 125.84(a)–(e) are insufficient to ensure that adverse environmental impact caused by a cooling water intake structure at a new facility will be minimized, he may impose additional requirements in the permit that are reasonably necessary to minimize adverse environmental impact.

EPA also is considering an approach under which the Director would have broad, discretionary authority to include permit conditions under section 316(b), in addition to the minimum requirements specified in today's proposal, that are reasonably necessary to minimize adverse environmental impact caused by a cooling water intake structure. The Director would not impose additional requirements if none are considered necessary; however, if a Director determines that the minimum requirements described above are not sufficient to minimize the specific adverse environmental impact associated with a particular cooling water intake structure, he or she would be authorized to include appropriate additional conditions in the permit or to deny the permit as warranted. This differs from the previous alternative in that under this alternative the Director would not be required to impose more stringent conditions. Also, in comparison to the proposed § 125.84(f), this approach would not provide a permit applicant with as much information to judge whether the Director is likely to impose additional requirements because the list of conditions the Director could consider would not be limited and enumerated. On the other hand, this approach would provide the Director with authority under this proposed rule to consider other unique and/or site-specific characteristics that might be important at a particular location to ensure that adverse environmental impact is minimized.

Finally, EPA is considering an approach under which the Director would have no section 316(b) authority to examine site-specific conditions and impose additional section 316(b) requirements. The Agency invites comment on each of these approaches to today's proposal and on the characteristics that a Director would consider in determining whether to impose additional section 316(b) requirements.

As discussed in item 7 above, today's proposal would allow the Director to specify alternative BTA requirements in limited circumstances. In addition, EPA is considering a variance alternative based on the use of innovative cooling water intake structure design and operation to minimize adverse environmental impact. The Agency is aware that existing and new facilities are using various designs for cooling water intake structures, which consist of passive and other innovative intake systems that use natural flow, gravity, some type of natural or artificial barrier, or some other feature to reduce impingement and entrainment. Examples include artificial filter beds, radial wells, porous dikes, and perforated pipes. (Because of inherent limitations, these designs might not work effectively at all facilities, such as high-flow facilities.) In some cases facilities that use these types of intakes can minimize their rates of impingement and entrainment to levels commensurate with those achieved under this proposed rule at a lower cost than conventional technologies would

allow, yet these facilities might not meet all of the minimum requirements EPA is proposing. This approach would encourage the use of innovative technologies provided that such technologies minimize adverse environmental impact. If EPA implemented this approach, language such as the following could be added to the regulation:

In the case of any new facility that proposes to design or operate a cooling water intake structure in an innovative manner (for example, by using natural flow, gravity, a natural or artificial barrier, or other innovative feature to reduce impingement and entrainment), the Director may impose requirements in the permit based on the use of the innovative design feature or method of operation in place of the requirements specified in § 125.84(a)–(e), if the Director determines (1) that the alternative requirements will minimize impingement and entrainment of aquatic organisms to a level commensurate with the level that would be attained if the facility were subject to the requirements specified in § 125.84(a)–(e), and (2) that the innovative design feature or method of operation has the potential for industry-wide operation.

This option could also include a requirement for consultation with, or approval by, the Administrator.

EPA requests comment on these approaches. In particular, EPA requests comment on (1) whether the new facility rule should provide for any type of variance from the national BTA requirements or the proposed, limited opportunity to specify alternative BTA requirements; (2) the factors that should be considered in any such variance; (3) how BTA requirements based on the use of innovative technologies could be structured to encourage technological innovation and ensure that qualifying facilities would minimize adverse environmental impact; and (4) whether there is a design intake volume above which a variance for use of innovative technologies should not be available.

B. What Technologies Can Be Used To Meet the Regulatory Requirements?

EPA has identified a number of intake technologies available for installation at cooling water intake structures to minimize adverse environmental impact. The intake technologies identified include some that are currently in use at facilities with cooling water intake structures in the United States and some that are still being evaluated or simply not in use at any facilities in the United States. The intake technologies can be classified into four categories:

- Intake Screen Systems: single-entry, single-exit vertical traveling screens; modified traveling screens (ristroph screens); single-entry, single-exit inclined traveling screens; single-entry, double-exit vertical traveling screens; double-entry, single-exit vertical traveling screens (dual-flow screens); horizontal traveling screens; fine mesh screens mounted on traveling screens; horizontal drum screens; vertical drum screens; rotating disk screens; and fixed screens.
- Passive Intake Systems: wedge-wire screens, perforated pipes, perforated plates, porous dikes, artificial filter beds, and leaky dams.
- Diversion or Avoidance Systems: louvers, velocity caps, barrier nets, air bubble barriers, electrical barriers, light barriers, sound barriers, cable and chain barriers, and water jet curtains.
- Fish Handling Systems: fish pumps, lift baskets, fish bypasses, fish baskets, fish returns, fish troughs, and screen washes.

Under the proposed rule, facilities would be required to submit a plan that contains information on the technologies they propose to implement based on the result of a *Source Water Baseline Characteristics* study (see Section IX.A.1). Each of the methods identified above is discussed in further detail below. Technologies other than bar racks and traveling screens are typically used only by traditional steam electric utility power plants. For a more detailed description of the following technologies, refer to *Preliminary Regulatory Development Section 316(b) of the Clean Water Act, Background Paper 3: Cooling Water Intake Technologies (April 1994) and Supplement to Background Paper 3: Cooling Water Intake Technologies (September 30, 1996)* in the docket for today's proposed rule.

1. Intake Screen Systems

The technologies classified as intake screen systems are mainly devices that screen debris mechanically. Passive intake systems discussed in the next section, require little or no mechanical activity.

EPA has classified the following intake technologies as intake screen systems: single-entry, single-exit vertical traveling screens; modified traveling screens (ristroph screens); single-entry, single-exit inclined traveling screens; single-entry, double-exit vertical traveling screens; double-entry, single-exit vertical traveling screens (dual-flow screens); horizontal traveling screens; fine mesh screens mounted on traveling screens; horizontal drum screens; vertical drum screens; rotating disk screens; and fixed screens.

Intake screen systems have been found to be limited in their ability to minimize adverse aquatic impact. This does not mean that they do not aid in reducing some impingement and entrainment of adult and juvenile fish. However, conventional traveling screens (the most widely used screening device in the United States) and most of the other types of traveling screens have been installed mainly for their ability to prevent debris from entering the cooling system. Fish impinged on those screens often suffocate or are injured when washed off the screen. They may or may not even be returned to the water body. In many cases, many of the fish are lost; in some cases, all of the fish are lost.

Conventional through-flow traveling screens have been modified so that fish impinged on the screens can be removed with reduced stress and mortality. These modified traveling screens have been shown to be more effective than conventional screens at lowering fish impingement and mortality at several locations. Some facilities have used fine mesh mounted on traveling screens to minimize entrainment. However, the amount of reduction attributable to any of these devices has been found to depend on the species involved, the water body type, and the age or size of the species present.

2. Passive Intake Systems (Physical Exclusion Devices)

Passive intake systems are devices that screen out debris and biota with little or no mechanical activity required. Most of these systems are based on achieving very low withdrawal velocities at the screening media so that all but free-floating organisms avoid the intake altogether.

EPA considers the following intake technologies to be passive intake systems (i.e., physical exclusion devices): wedge-wire screens, perforated pipes, perforated plates, porous dikes, artificial filter beds, Gunderbooms, and leaky dams.

Wedge-wire screens appear to offer a potentially effective means of reducing fish losses. Testing of wedge-wire screens has demonstrated that fish impingement is virtually eliminated and that entrainment of fish eggs and larvae is reduced. However, the application of wedge-wire screens is limited to cooling water intake structures that withdraw lower volumes because of size limitations of the screens themselves. In fact, physical size is the limiting factor of most passive systems, thus requiring the clustering of a number of screening units. Siltation, biofouling, and frazil ice also limit locations where passive intake systems can be used. In addition, most of the research for the reduction of

entrainment has concentrated on the intake of relatively small quantities of water, in the range of 28 to 56 million gallons per day, typical of the make-up water supply of large closed-cycle recirculating cooling water systems and of nuclear power plant service water systems.

3. Diversion or Avoidance Systems

Diversion or avoidance devices are also called behavioral barriers. These devices are designed to take advantage of the natural behavioral patterns of fish so that the fish will not enter an intake structure. Diversion devices either guide aquatic organisms such as fish, crabs, and shrimp away from an intake structure or guide them into a bypass system so that they are directed or physically removed from the intake area. An example of a diversion device is the louver. Avoidance devices, on the other hand, are used to make the intake unattractive to aquatic organisms so that they avoid the area of the intake altogether. Sound barriers are a typical avoidance device. They create sounds that the aquatic organisms do not like, forcing them to avoid the intake area. Unlike the screening and physical exclusion devices already discussed, behavioral barriers are used specifically to keep fish and other motile organisms from entering the intake system. Like the technologies discussed above, these devices are not always used to protect fish and organisms. They might be used to protect equipment at the facility that could become fouled and require more maintenance if aquatic organisms are allowed to enter the intake.

EPA considers the following intake technologies to be fish diversion and avoidance systems: louvers, velocity caps, barrier nets, air bubble barriers, electrical barriers, light barriers, sound barriers, cable and chain barriers, and water jet curtains.

Diversion or avoidance systems do not protect organisms or fish that are nonmotile (i.e., those that are free-floating or cannot move themselves about) or in early life stages because they rely on behavioral characteristics. Therefore, the effectiveness and performance of the devices are species-specific. In addition, many of the diversion or avoidance devices are appropriate only for seasonal entrainment problems. To evaluate the applicability of these technologies, site-specific testing would be required at most sites where these devices are to be used.

4. Fish-Handling Systems and Other Technologies

Fish-handling systems and other technologies are used alone or in conjunction with screening systems for the protection of aquatic life. EPA considers the following intake technologies to be fish-handling systems: fish pumps, lift baskets, fish bypasses, fish baskets, fish returns, fish troughs, and screen washes. These technologies can be used alone or in a series such as fish buckets, fish troughs, and a spray wash system. Fish-handling technologies are used to remove fish that congregate in front of a screen system or to divert them to holding areas. Fish that congregate near screens are removed from the area by fish pumps, lift baskets, fish troughs, and fish returns and are returned to open waters, reducing impacts on the aquatic community.

C. How Is Cost Being Considered in Establishing BTA for New Facilities?

For today's proposed rule, EPA has considered four cost tests that could be used to evaluate the costs that would be associated with this proposal are reasonable in relation to the environmental benefits to be derived. The Agency used one of these tests as a basis for determining on a national level that the proposed requirements would be economically practicable.

Although section 316(b) does not explicitly state that costs must be considered in determining appropriate cooling water intake structure controls, EPA has long recognized that there should be some reasonable relationship between the cost of cooling water intake structure control technology and the environmental benefits associated with its use. As the preamble to the 1976 final rule implementing section 316(b) stated, neither the statute nor the legislative history requires a formal or informal cost-benefit assessment. 41 FR 17387 (April 26, 1976). The 1976 preamble also noted that the legislative history of section 316(b) indicates that the term ''best technology available'' should be interpreted as ''best technology available commercially at an economically practicable cost.'' [52] This position reflects congressional concern that the application of best technology available should not impose an impracticable and unbearable economic burden.

EPA concludes that a formal cost test is appropriate in determining ''best technology available commercially at an economically practicable cost.'' In determining the most appropriate cost test, the Agency considered (1) the wholly disproportionate cost test, (2) the compliance cost/revenue test, (3) the compliance cost/construction cost test, and (4) the compliance cost/discounted cash flow test. EPA also considered two methods for implementing these cost tests: a case-by-case or a national determination.

Under the wholly disproportionate cost test, a cooling water intake structure technology would not be deemed to reflect BTA if the incremental costs of requiring the use of that technology are wholly disproportionate to the environmental benefits to be gained through its use. Several section 316(b) administrative decisions have stated that this test is the most appropriate for determining economic burden.[53] This is also the approach adopted discussed in the 1977 Draft Guidance.

Historically, the cases in which costs have been determined to be wholly disproportionate have involved existing facilities that have been required to retrofit their cooling water intake structures to implement BTA. Given the characteristics of the regulated industries, such retrofitting to meet BTA often meant requiring the installation of cooling towers along with necessary modifications to the plant and significant capital expenditures and down time required for installation. In contrast, new facilities would not incur retrofit costs. Rather, new facilities would incur only the cost of any incremental difference between their planned cooling water intake structure technology and that required under a rule based on today's proposal. Given that many new facilities are designing their cooling water intake structures in a manner consistent with today's proposed BTA requirements, EPA concludes that these incremental costs are unlikely to be large.

A limitation of using the wholly disproportionate test for new facilities, on either a national or case-by-case basis, is that the impingement and entrainment estimated before a facility is built can be very imprecise. There are numerous documented cases among existing facilities in which the rates of

[52] *See* 118 CONG. REC 33,762 (1972), *reprinted in* 1 Legislative History of the Water Pollution Control Act Amendments of 1972, at 264 (1973) (Statement of Representative Don H. Clausen).

[53] See, *In the Matter of Public Service Company of New Hampshire,* 10 MRC 1257 (6/10/77)(The Seabrook II Decision); Brunswick I, Region IV, EPA 3 (Nov. 7, 1977) (Initial Decision re: Permit No. NC007064); *In re* Tennessee Valley Authority, John Sevier Steam Plant: NPDES Permit No. TN0005436 (Jan. 23, 1986); *In re* Florida Power Corp., Crystal River Power Plant Units 1, 2, & 3:NPDES Permit No. FL0000159 (Sept. 1, 1988).

impingement and entrainment rates predicted by the facility were substantially lower than the impingement and entrainment that actually occurred during operation. Brayton Point is an example of the underestimation of impacts that can occur.[54] Because of the difficulty in prospectively estimating impingement and entrainment rates at new facilities, EPA has chosen not to use the wholly disproportionate cost test to estimate the impact of today's proposal.

EPA also considered three economic achievability tests. First, EPA considered a compliance cost/revenue test to assess economic achievability by comparing the magnitude of annualized compliance costs with the revenues the facility is expected to generate. This is an appealing test because it compares the cost of reducing adverse environmental impact from the operation of the facility with the economic value (i.e., revenue) the facility creates. Under this alternative, EPA would establish a threshold to identify when annual compliance costs constitute a disproportionate percentage of projected annual income. This test could be implemented on a national or case-by-case basis because a firm should have an estimate of expected revenues when it applies for a loan to build a new facility.

EPA also considered a compliance cost/construction cost test to assess economic impacts associated with complying with this proposed rule. This test compares compliance costs with the capital costs of building the facility. Compliance costs would include all those costs incurred by new facilities to meet the requirements of the proposed rule. The compliance cost/construction test is appealing because it shows the percentage increase in the total cost of getting the facility operational as a result of the section 316(b) regulations, providing a perspective on the relative magnitude of compliance requirements. Under this alternative EPA would establish standards that identify when initial section 316(b) compliance costs constitute a disproportionate percentage of total facility construction costs. This test has the advantage of being easy to perform on a case-by-case basis because it is based on engineering and construction costs and therefore is more precise than the other tests such as the discounted cash flow test. On the other hand, there are drawbacks to applying this test nationally. Information on average construction costs of new electric generating facilities is available from the Energy Information Administration (EIA), but this information is not available for other industries nor is it transferable across industries. Additional site-specific information on construction costs for planned cooling water intake structure generators is available from public sources. However, there are considerable inconsistencies in what components of capital costs are reported. As with Energy Information Administration-reported average construction costs, this information is generally available only for new steam electric generating facilities, not for other manufacturing facilities.

The final alternative EPA considered is a compliance cost/discounted cash flow test to determine economic achievability. Discounted cash flow is present discounted value of future cash flow. This test is useful because it examines the effects of compliance with today's proposed rule on the facility's cash flow. Although a discounted cash flow test can be performed for existing facilities, on both a national and case-by-case basis, this test is not appropriate for new facilities because of a lack of available data and the analytic requirements it would impose. Because new facilities do not have a cash flow prior to operations, this test would require more estimation and would be far less precise than the other tests.

EPA used the compliance cost/revenue test to determine whether today's proposed section 316(b) requirements are economically practicable. This test uses the ratio of annualized compliance costs to estimated annual revenues to assess impacts on new facilities. The Agency is proposing this as the most appropriate test to evaluate economic practicability for several reasons. First, EPA has extensive experience using this test. For example, under the Regulatory Flexibility Act, the Agency uses this test as a screening tool (along with the number of facilities expected to be affected) to determine whether a detailed analysis of impacts on small entities is necessary. EPA also frequently uses this test to evaluate economic impacts in the effluent guidelines program. Second, the data needed to perform the test are available or can be readily projected, whereas the data required to conduct the compliance cost/construction cost test and the compliance cost/discounted cash flow test are not available or are more difficult to obtain. Third, this test provides a reliable measure of whether costs are ''economically practicable.''

EPA calculated compliance costs for projected new steam electric generating and manufacturing facilities and applied screening tests to assess the impacts of those costs on the economic viability of the new facilities. The results of EPA's economic impact analysis indicate that the compliance costs of this proposal are generally small compared with the estimated revenues of the affected facilities, ranging from 0.1 percent to 4.2 percent of revenues for steam electric generating facilities and less than 0.1 percent to 8.8 percent of revenues for manufacturing facilities. Only two of the 35 projected new manufacturing facilities were estimated to incur annualized compliance costs greater than one percent of annual revenues. For steam electric generating facilities, EPA also found that compliance costs as a percent of construction costs are small. The total capital costs and cost of initial permitting for steam electric generating facilities ranged between less than 0.1 percent to 0.3 percent of the overall cost of plant construction. These results indicate that the proposed requirements are economically practicable, and are achievable by the affected new facilities.

The Agency also has determined that the proposed rule would not have an adverse economic impact on industry as a whole. EPA finds that the proposed rule is economically practicable and achievable nationally because a very small percentage of facilities are expected to be affected by the regulation and the impact on those that would be affected would be small.

The electricity generating industry would not be significantly affected by today's proposal. Today's proposed rule only affects electric generating facilities that generate electricity with a steam prime mover. Although these facilities constitute approximately 75 percent of the total electric generating industry, approximately 88 percent of the new facilities that do have a steam-electric prime mover and for which EPA was able to obtain cooling water information would not be subject to this regulation because they do not withdraw cooling water from waters of the U.S. or because they are not required to have an NPDES permit. In general, the Agency concludes that economic impacts on the electric generating industry from this proposed rule would be economically practicable because facilities required to comply with the proposed requirements would have the opportunity to be redesigned to avoid or minimize costs.

The costs to new manufacturing facilities also would not be significantly

[54] Mark Gibson, ''Comparison of Trends in the Finfish Assemblages of Mt. Hope Bay and Narragansett Bay in Relation to Operations of the New England Power Brayton Point Station,'' Rhode Island Division Fish and Wildlife, Marine Fisheries Office, June 1995 and revised August 1996.

affected by today's proposed regulation also would be economically practicable. An analysis of the data collected using the Agency's section 316(b) Industry Screener Questionnaire indicates that in the industry sectors with at least one new facility that is subject to this proposed rule, only 364 of the 2,037 existing facilities targeted, or 17.8 percent, have an NPDES permit and directly withdraw cooling water from waters of the U.S. Of these 364 facilities, only 232 facilities are estimated to withdraw more than two (2) MGD. In addition, new facilities can be expected to have less costly alternatives for complying with the proposed rule than would existing facilities for which location, design, construction, and capacity decisions have already been made . Existing facilities might require retrofitting if subject to the same requirements proposed today.

As discussed above, the Agency evaluated the costs and impacts of the section 316(b) requirements proposed today on a national level. The Agency has determined that the incremental costs of installing the BTA requirements proposed today are economically practicable at a national level, although EPA recognizes that costs could be significant for individual facilities. EPA believes that evaluating costs and impacts on a national level is most appropriate for a proposed rule that establishes minimum section 316(b) requirements for large numbers of new facilities nationally. This approach at a national level would significantly reduce the burden on permit writers because they would then not be required to implement a cost test when developing appropriate permit conditions to implement the proposed national requirements on a facility-specific basis. However, as noted above, EPA is also requesting comment on several regulatory options under which costs and benefits could be considered on a case-by-case basis in determining BTA.

EPA invites comment on all aspects of the proposed cost test and the Agency's proposal to assess the impact of today's proposed rule on a national level.

IX. Implementation

Under the proposed rule, section 316(b) requirements would be implemented in an NPDES permit. The regulations would establish application, monitoring, recordkeeping, and reporting requirements for new facilities. The proposed rule would also include requirements for Directors in developing NPDES permits for new facilities. The proposed rule states that the Director, at a minimum, must include in the permit the cooling water intake structure requirements at § 125.84, monitoring conditions at § 125.87, and recordkeeping and reporting requirements at § 125.88.

EPA will develop a model permit and permitting guidance to assist Directors in implementing these requirements. In addition, the Agency will develop implementation guidance for owners and operators that will address how to comply with the application requirements, the sampling and monitoring requirements, additional technology plans, and the recordkeeping and reporting requirements in these regulations.

A. What Information Must I Submit to the Director When I Apply for My New or Reissued NPDES Permit?

The NPDES application process under 40 CFR 122.21 requires that facilities submit information and data 180 days prior to the commencement of a discharge. If you are the owner or operator of a facility that meets the new facility definition, you would be required to submit the information required under § 125.86 of today's proposed rule with your initial permit application and with subsequent applications for permit reissuance. The Director would review the information you provide and, based on the approach discussed in Section IX.B, would determine whether your facility is a new facility and establish the appropriate requirements to be applied to the cooling water intake structure(s).

Today's proposal would require you to submit four categories of information when you apply or reapply for your NPDES permit: (1) Results of the Source Water Baseline Biological Characterization study; (2) source water physical data; (3) cooling water intake structure velocity and flow data; and (4) data to show compliance with the flow requirements, velocity requirement, flow reduction requirement, and additional technology requirements. In addition, if you are seeking an alternative requirement under § 125.85, you must submit a fifth item: Data that demonstrate that your compliance costs are wholly out of proportion to the costs considered by EPA in establishing by EPA in establishing the requirements of § 125.84(a) through (e). You must begin to collect data for the Source Water Baseline Biological Characterization study at least 1 year prior to submitting your application to the Director. If you are required to submit a sample plan (*i.e.,* your cooling water intake structure is located inside or less than 50 meters outside the littoral zone of the water body), you must submit your sample plan for review and approval or disapproval to the Director at least 90 days before any sampling activities are scheduled to begin. An example schedule of when the activities associated with a facility's permit application might be performed is provided in Exhibit 2.

EXHIBIT 2.—EXAMPLE OF SCHEDULE FOR PERMIT APPLICATION ACTIVITY

NPDES permit application activity	Days prior to commencement of operation
Submit sampling plan for Source Water Baseline Biological Characterization.	635
Begin sampling for Source Water Baseline Biological Characterization.	545
Submit permit application	180

1. Source Water Baseline Biological Characterization Data

Proposed § 125.86(a) would require baseline ambient biological data in the form of a Source Water Baseline Biological Characterization. This study would establish an initial baseline for evaluating potential impact from the cooling water intake structure before the start of operation. In addition, you would be required to reevaluate the study and perform additional ambient monitoring before submitting an application for the reissuance of the permit to establish or reestablish the baseline for the next permit term. The Director would use the study to identify the species most susceptible to impingement and entrainment, their life stages, their abundance in the source water, and their environmental requirements and habitat.

Proposed § 125.86(a) also would require you to submit the results of a Source Water Baseline Biological Characterization at the time of your NPDES permit application. As part of the Source Water Baseline Biological Characterization, if you must implement additional design and construction technologies, you would be required to collect data over a period of one year. Before you start any sampling for the study, you would be required to submit a sampling plan to the Director for review and approval. The proposed rule would require you to submit the sampling plan 90 days before you intend to start the study. You are encouraged to make the sampling plan available to the following entities for review and comment: Federal agencies such as the U.S. Fish and Wildlife Service, the National Marine Fisheries

Service, and the U.S. Army Corps of Engineers; appropriate State fish and wildlife agencies; local fish and wildlife organizations or advocacy groups; and the public. If such coordination and public involvement is conducted, you should identify and indicate the results of this effort in your application submission to the Director. Public involvement in developing the sampling plan would facilitate the Director's review and approval of the plan.

In addition, § 125.86(a)(3) would require that you identify all threatened and endangered species that might be susceptible to impingement and entrainment. The Director might coordinate a review of your list with the U.S. Fish and Wildlife Service and/or National Marine Fisheries Service staff to ensure that potential impacts to threatened and endangered species have been addressed.

The study would begin with a site-specific, preoperational baseline assessment to determine the presence of fish and shellfish (eggs, larvae, post larvae, juveniles, and adults) in the surface water serving the cooling water intake structure. Their presence during the course of a year would need to be documented in terms of the kinds, numbers, life stages, and duration of occurrence in the source water in close proximity to the proposed location of the cooling water intake structure. This information would identify the community of fish and shellfish that would potentially be subject to impingement and entrainment effects. Information supporting this documentation would likely be derived from new, site-specific studies and possibly from historical records applicable to the water body serving the proposed cooling water intake structure. In all cases, the data to be used would need to be appropriately certified through established quality assurance procedures.

The Source Water Baseline Biological Characterization would serve two purposes. First, the Director would use the study to identify species and their relative numbers potentially subject to intake effects following implementation of the location, flow, and velocity requirements. Then during each permit reissuance cycle, the Director would compare the preoperational ambient data with the post operational data to evaluate the efficacy of the location, flow, and velocity requirements. Second, when the cooling water intake structure is located in the more sensitive area of a water body, the Director would use the findings of the Source Water Baseline Biological Characterization study to define the need for additional design and construction technologies.

One source of information is past entrainment and impingement assessments prepared by other facilities using the same water source for cooling purposes. These studies can potentially provide a wealth of information regarding sampling strategies, species that might already be affected by intake effects, and trends in species mix and relative abundance. In the *Economic and Engineering Analysis of the proposed § 316 New Facility Rule,* EPA has estimated a cost of approximately $32,000 per facility for all activities, including monitoring and capital and O & M costs associated with the Source Water Baseline Biological Characterization. EPA is aware that facilities have typically spent considerably more than this on studies to support site-specific section 316(b) determinations in the past. However, EPA expects that the Baseline Characterization Study required in the proposed rule would generally be less comprehensive (and thus less expensive) that section 316(b) studies that have been conducted in the past because the scope and level of detail required in the Baseline Characterization Study is more limited that studies typically submitted. EPA requests comment on its projected costs for the Baseline Characterization.

2. Source Water Physical Data

Proposed section 125.86(b)(1) would require you to provide source water information to the Director. The Director would use the source water data to evaluate the potential impact on the water body in which the intake structure is located. Depending on its location in the source water and the source water type, the intake structure would affect different species or life stages. For example, intakes located in the littoral zone are more likely to affect spawning and nursery areas, whereas intakes located offshore are more likely to affect migratory routes. In addition, the proximity of the intake structures to sensitive aquatic ecological areas might result in potential adverse environmental impact. Source water information that you would be required to submit includes a description and a drawing of the physical configurations of the source water body where the cooling water intake structure is located, source water flow or volume data, and documentation delineating the littoral zone, such as submerged vegetation and substrate data, for the water body in relation to each cooling water intake structure.

Your documentation supporting the littoral zone determination should include light penetration and hydromorphological data, submerged aquatic vegetation data, and substrate data. You may measure littoral zones through transects perpendicular to shore to identify the point of transition between the littoral and deeper (e.g., profundal) portions of the waterbody. A minimum of three transects would be established, with one at the proposed intake location, one upstream within the area of influence, and one downstream of the proposed intake in the area of influence. The first, and most important, criterion of the littoral zone boundary is where light penetration is not sufficient to support submerged aquatic vegetation. A photometer to measure incident light or a Secchi disk to make visual observations can provide rapid measurements along the transects. Depth can be readily measured with a fathometer or weighted line calibrated in meters. These two measurements will provide information on whether light reaches the bottom to support vegetation growth and whether the slope of the bottom changes dramatically enough to indicate an abrupt end to the littoral zone. A change in substrate composition sometimes occurs as the littoral zone ends. Therefore, grab samples can be taken along the transects and evaluated for substrate composition (e.g., gravel, sand, silt, clay). After you delineate the littoral zone, the last step in this process is to determine where the cooling water intake structure is located in relation to the littoral zone.

3. Cooling Water Intake Structure Velocity and Flow Data

Proposed section 125.86(b)(2) would require you to submit information on the intake structure and to provide a water balance diagram for your facility. The Director would use this information to evaluate the potential for impingement and entrainment of aquatic organisms. The design of the intake structure and the location in the water column would allow the Director to evaluate which of the requirements in today's proposed rule apply to the facility (for example, design intake velocity, flow rate, and location relative to the littoral zone). The water balance diagram provides the Director with a complete accounting of the flow in and out of the facility. A water balance diagram is the most effective tool to evaluate the water use patterns at a facility and to determine water used for cooling purposes, makeup, and processes.

To demonstrate your design velocity, you would need to provide to the

Director the engineering calculations you used to calculate your velocity.

If your facility is located on a freshwater river or stream, you would need to provide calculations that demonstrate that you meet the flow requirements for both the mean annual flow and the 7Q10 flow. The 7Q10 flow is the lowest average seven-consecutive-day low flow with an average recurrence frequency of once in 10 years determined hydrologically. If your facility is located on an estuary or a tidal river, you would need to calculate the tidal excursion and provide the flow data for your facility and the supporting calculations.

The tidal excursion distance can be computed using three different methods ranging from simple to complex. The simple method involves using available tidal velocities that can be obtained from the Tidal Current Tables formerly published by the National Ocean Service of the National Oceanic and Atmospheric Administration (NOAA) and currently printed and distributed by private companies (available at book stores or marine supply stores). The mid-range method involves computing the tidal excursion distance using the Tidal Prism Method.[55] The complex method involves the use of a 2-dimensional or 3-dimensional hydrodynamic model. The simplest method to use is the following:

(1) Locate the facility on either a NOAA nautical chart or a base map created from the USGS 1:100,000 scale Digital Line Graph (DLG) data available from the USGS Internet web site. These DLG Data can be imported into a computer-aided design (CAD)-based program or geographic information system (GIS). If these tools are unavailable, 1:100,000 scale topographic maps (USGS) can be used.

(2) Obtain maximum flood and ebb velocities (in meters per second) for the water body in the area of the cooling water intake structure from NOAA Tidal Current Tables.

(3) Calculate average flood and ebb velocities (in meters per second) over the entire flood or ebb cycle using the maximum flow and ebb velocities from 2 above.

$$\text{Velocity}_{\text{Average Flood}} = \text{Velocity}_{\text{Maximum Flood}} * {}^{2}\!/_{\pi} \qquad \text{(Equation 1)}$$

$$\text{Velocity}_{\text{Average Ebb}} = \text{Velocity}_{\text{Maximum Ebb}} * {}^{2}\!/_{\pi} \qquad \text{(Equation 2)}$$

(4) Calculate the flood and ebb tidal excursion distance using the average flood and ebb velocities from 3 above.

$$\text{Distance}_{\text{Flood Tidal Excursion}} = \text{Velocity}_{\text{Average Flood}} * 6.2103 * 3600\ {}^{s}\!/_{hr} \qquad \text{(Equation 3)}$$

$$\text{Distance}_{\text{Ebb Tidal Excursion}} = \text{Velocity}_{\text{Average Ebb}} * 6.2103 * 3600\ {}^{s}\!/_{hr} \qquad \text{(Equation 4)}$$

(5) Using the total of the flood and ebb distances from above, define the diameter of a circle that is centered over the opening of the cooling water intake structure.

(6) Define the area of the water body that falls within the area of the circle (see Appendix 3 to Preamble). The area of the water body, if smaller than the total area of the circle might be determined either by using a planimeter or by digitizing the area of the water body using a CAD-based program or GIS.

For cooling water intake structures located offshore in large water bodies, the area of the water body might equal the entire area of the circle (see D in Appendix 3 to Preamble). For cooling water intake structures located flush with the shoreline, the area might be essentially a semicircle (see C in Appendix 3 to Preamble). For cooling water intake structures located in the upper reaches of a tidal river, the area might be some smaller portion of the area of the circle (see A in Appendix 3 to Preamble).

(7) Calculate the average depth of the water body area defined in 6 above. Depths can easily be obtained from bathymetric or nautical charts available from NOAA. In many areas, depths are available in digital form.

(8) Calculate a volume by multiplying the area of the water body defined in 5 by the average depth from 7. Alternatively, the actual volume can be calculated directly with a GIS system using digital bathymetric data for the defined area.

The Director would use the facility's water balance diagram to identify the proportion of intake water used for cooling, makeup, and process water. A simplified water balance diagram that gives a complete picture of the total flow in and out of the facility would allow the Director to evaluate compliance with the flow reduction requirements.

4. Data To Show Compliance With the Flow Requirements, Velocity Requirement, Flow Reduction Requirement, and Additional Design and Construction Technology Requirement

Today's proposal at § 125.86(b) (3) through (6) would require you to provide information on additional operating procedures, technologies, and plans to demonstrate compliance with the applicable requirements set forth in today's proposed rule. You would be required to provide to the Director a plan containing narrative descriptions and engineering design calculations of the technologies the facility proposes to implement to demonstrate compliance with the flow, velocity, flow reduction, and additional design and construction technology requirements. If your facility will meet the flow reduction requirement through reuse of 100 percent of the cooling water withdrawn from a source water, you must provide a demonstration that 100 percent of the cooling water is reused in one or more unit processes at the facility.

EPA requests comment on all aspects of the proposed data provision requirements.

5. Data To Support a Request for Alternative Requirements

If you request an alternative requirement, today's proposal at § 125.86(b)(7) would require that you submit all data showing that your

[55] E. Diana, A.Y. Kuo. B.J. Neilson, C.F. Cerco, and P.V. Hyer. *Tidal Prism Model Manual,* Virginia Institute of Marine Science, Gloucester Point, VA, January 1987.

compliance costs are wholly out of proportion to the costs EPA considered during development of the requirements at issue. Compliance costs that EPA considered were sub-divided into one-time costs and recurring costs. Examples of one-time costs include capital and permit application costs. Examples of recurring costs include operation and maintenance costs, permit renewal costs, and monitoring, recordkeeping and reporting costs.

B. How Would the Director Determine the Appropriate Cooling Water Intake Structure Requirements?

The Director's first step would be to determine whether the facility is covered by the requirements in these proposed regulations for new facilities. If the answer is ''yes'' to all the following questions, the facility would be required to meet the requirements of this proposed regulation:

(1) Is the facility a ''new facility'' as defined in § 125.83?

(2) Does the new facility have a ''cooling water intake structure'' as defined in § 125.83?

- Is at least 25 percent of the water withdrawn by the facility used for cooling purposes?
- Is the cooling water withdrawn from waters of the U.S.?

(3) Does the new facility have a design intake flow of greater than 2 million gallons per day? [56]

(4) Does the new facility discharge pollutants to waters of the U.S., including storm water-only discharges?

If these proposed regulations are applicable to the new facility, the second step would be to determine the locational factors associated with the new facility's cooling water intake structure. The Director would first review the information that the new facility provided to validate the source water body type in which the cooling water intake structure is located (freshwater stream or river, lake or reservoir, estuary or tidal river, or ocean). (As discussed above, the new facility would need to identify the source water body type in the permit application and provide the appropriate documentation to support the water body type classification.) After validating the water body type, the Director's next task would be to verify the facility's delineation of the littoral zone boundaries. The Director would review the supporting material the facility provided in the permit application. The Director would also review the engineering drawings and the locational maps the new facility provided, documenting the physical placement of the cooling water intake structure.

The Director's third step would be to review the design requirements for intake flow and velocity. The proposed velocity requirement is based on the design through-screen or through-technology velocity as defined in § 125.83. The maximum design velocity would always be 0.5 ft/s (except for cooling water intake structures located 50 meters outside the littoral zone in a lake or reservoir). However, pursuant to proposed section 125.84(f) and (g), the Director might determine, based on site-specific characteristics, that a more stringent design velocity (*e.g.,* 0.3 ft/s) is required to minimize adverse environmental impact. To determine whether the new facility meets the maximum design velocity requirement, the Director would review the narrative description of the design, structure, equipment, and operation used to meet the velocity requirement. The Director would also review the design calculations that demonstrate that the maximum design velocity would be met. In reissuing permits, the Director would review velocity monitoring data to confirm that the facility is maintaining the initial design velocity calculated at the start of commercial service.

The proposed flow requirement is based on the water body type and the physical placement of the cooling water intake structure in relation to the littoral zone. To determine whether the new facility meets the proposed flow requirement, the Director would first verify the new facility's determination of the water body flow for the respective water body type (*e.g.,* annual mean flow and low flow for freshwater river or stream). The Director would review the source water flow data the facility provided in the permit application. The Director might want to use available U.S. Geological Survey (USGS) data (for freshwater rivers and streams) to verify the flow data the facility provided in its permit application. Then the Director would review any supporting documentation and engineering calculations that demonstrate that the new facility would meet the proposed flow requirements. To verify the flow data the new facility provides for an estuary or a tidal river, the Director would review the facility's calculation of the tidal excursion. In particular, if the new facility is required to reduce its intake flow to a level commensurate with that which could be attained by a closed-cycle recirculating cooling water system, the Director would review the narrative description or the closed-cycle recirculating cooling water system design and any engineering calculations to ensure that the new facility is complying with the requirement and that the makeup and blowdown flows have been minimized.

The fourth step for the Director would be to review the applicant's Source Water Baseline Biological Characterization study and to determine whether additional design and construction technologies are required. In those instances where additional design and construction technologies (*e.g.,* fish handling devices) are required, the Director would review and approve, approve with comment, or disapprove the applicant's proposed plans to meet these requirements. In some instances, the applicant might assert that its Source Water Baseline Biological Characterization demonstrates that no impingement or entrainment is occurring (*e.g.,* in a shipping canal). The Director would need to carefully evaluate the data and determine whether these additional requirements are appropriate for a facility located in a heavily industrialized water body. During each permit renewal, the Director would then review supporting data to evaluate whether the site-specific conditions have changed such that the facility needs to implement these additional design and construction technologies.

In reviewing the application information, the Director would determine if the new facility meets the appropriate requirements in proposed § 125.84(a) through (e) based on its location on and in the water body, including the flow requirements, intake velocity requirements, and additional design and construction technology requirements. The proposed regulations at § 125.84(f) allow Directors to impose more stringent requirements if it is determined that they are reasonably necessary to minimize adverse environmental impacts. However, the Director may require more stringent requirements under proposed § 125.84(f) only where they are reasonably necessary as a result of the effects of multiple intakes on a waterbody, seasonal variations in the aquatic environment affected by the cooling water intake structure controlled by the permit (such as seasonal migration), or the presence of regionally important species. The proposed regulations at § 125.84(g) require Directors to impose more stringent requirements on cooling water intake structures where they are reasonably necessary to ensure the

[56] If the answer is ''no'' to the flow parameter and the answer is ''yes'' to all the other questions, the Director would use best professional judgment on a case-by-case basis to establish permit conditions that ensure compliance with section 316(b).

attainment of water quality standards, including designated uses, criteria, and antidegredation.

The Agency is aware that the determination of appropriate requirements would require expertise in aquatic biology. The Agency encourages consultation with, and input from, EPA, State, or Tribal staff who have the appropriate expertise. In addition, the Agency encourages coordination with the U.S. Fish and Wildlife Service and the National Marine Fisheries Service.

C. What Would I Be Required To Monitor?

The monitoring requirements in today's proposed rule at § 125.87 include biological monitoring of impingement and entrainment, monitoring of the screen head loss and velocity, and visual inspections.

Impingement and entrainment monitoring would be used to assess the presence, abundance, and life stages (eggs, larvae, post larvae, juveniles, and adults) of aquatic organisms (fish and shellfish) impinged or entrained during operation of the cooling water intake structure. The purpose of the site-specific monitoring is to determine whether the representative species list established in the Source Water Baseline Biological Characterization remains representative of the water body with the operation of the cooling water intake structure and to establish the level of impingement and entrainment. Monitoring would include sampling of organisms trapped on the outer part of intake structures or against screening devices and sampling of organisms entering or passing through the cooling water intake structure and into the cooling water system. Moreover, because ambient water and biological conditions might change over time, sustained monitoring is necessary to identify those species affected post operationally by the cooling water intake structure.

In proposed § 125.87(b), EPA would require monitoring of the head loss across the intake screens to obtain a correlation of those values with the design intake velocity at minimum ambient source water surface elevation and maximum head for each cooling water intake structure. The data collected by monitoring this parameter would provide the Director with additional information after the design and construction of the cooling water intake structure to demonstrate that the facility is operating and maintaining the cooling water intake structure in a manner that the velocity requirement continues to be met. The Agency considers this the most appropriate parameter to monitor because although the facility might be designed to meet the requirement, proper operation and maintenance is necessary to maintain the open area of the screen and intake structure, ensuring that the design intake velocity is maintained. Head loss can easily be monitored by measuring and comparing the height of the water in front of and behind the screen and/or other technology. Facilities that use devices other than screens would be required to measure the actual velocity at the point of entry through the device. Velocity can be measure using velocity meters placed at the entrance into the device.

The Agency considered requiring annual monitoring of either the screen- or through-technology velocity or actual approach velocity at each cooling water intake structure to demonstrate that they are being operated and maintained properly. EPA seeks comment on these and other parameters that could be monitored to ensure that the design intake velocity is not exceeded once the facility is built and operating.

Weekly visual inspections would be required to provide a mechanism for both the new facility and the Director to ensure that any technologies that have been implemented to minimize adverse environmental impact are being maintained and operated in a manner that ensures that they function as designed. EPA has proposed this requirement so that facilities could not develop plans and install technologies only to let them fall into disrepair or to operate them differently so that adverse environmental impact is not minimized to the extent expected. The Director would determine the actual scope and implementation of the visual inspections based on the types of technologies installed at your facility. For example, they could be as simple as observing bypass and other fish handling system to ensure that debris has not clogged the system rendering them inoperable.

The facility would be required to monitor at a frequency specified in proposed § 125.87. For biological monitoring required in proposed § 125.87(a), after two years, the Director may approve a request for less frequent monitoring if the facility desires it and provides data to support the request. The Director would consider a request for reduced frequency in the impingement or entrainment monitoring only if the supporting data show that less frequent monitoring would still allow for the detection of any seasonal and daily variations in the species and numbers of individuals that are impinged or entrained. With each permit renewal, the applicant would continue to monitor individual aquatic organisms that are impinged or entrained. Based on the monitoring results, species might need to be added or removed from the most representative species list. The monitoring results would provide current, site-specific knowledge of impingement/entrainment effects. EPA requests comment on all aspects of the proposed monitoring requirements.

D. How Would Compliance Be Determined?

In today's proposed rule, § 125.89 specifies what the Director must do to comply with the proposed rule. Consistent with these provisions, the Director would determine compliance with the requirements of the proposed rule based on the following:

- Data submitted with the NPDES permit application to show that the facility is in compliance with location, design, construction, and capacity requirements (§ 125.86).
- Compliance monitoring data and records, including impingement and entrainment monitoring, to show that impingement and entrainment impacts are being minimized (§ 125.87(a)).
- Through-screen or through-technology velocity monitoring data and records to show that the facility is being operated and maintained as designed to continue to meet the velocity requirement (§ 125.87(b)).
- Visual inspection to show that technologies installed are being operated properly and function as they were designed (§ 125.87(c)).

Facilities would be required to keep records and report the above information in a yearly status report as proposed in § 125.88. EPA requests comment on this requirement. In addition, Directors may perform their own compliance inspections as deemed appropriate in accordance with 40 CFR 122.41.

E. What Are the Respective Federal, State, and Tribal Roles?

Section 316(b) requirements are implemented through NPDES permits. As discussed in Section II.A., today's proposed regulations would amend 40 CFR 123.25(a)(36) to add a requirements that authorized State programs have sufficient legal authority to implement today's proposed requirements (40 CFR part 125, subpart I). Therefore, today's proposed rule potentially affects authorized State and Tribal NPDES permit programs. Under 40 CFR 123.62(e), any existing approved section 402 permitting program must be revised to be consistent with new program

requirements within one year from the date of promulgation, unless the NPDES-authorized State or Tribe must amend or enact a statute to make the required revisions. If a State or Tribe must amend or enact a statute to conform with today's proposed rule, the revision must be made within two years of promulgation. States and Tribes seeking new EPA authorization to implement the NPDES program must comply with the requirements when authorization is requested.

In addition to updating their programs to be consistent with today's rule, States and Tribes authorized to implement the NPDES program would be required to implement the cooling water intake structure requirements following promulgation of the final regulations. The requirements proposed must be implemented upon permit issuance and reissuance. Duties of an authorized State or Tribe under this regulation would include:

- Verification of a permit applicant's determination of source water body classification and the flow or volume of certain water bodies at the point of the intake;
- Verification that the intake structure maximum flow rate is less than the maximum allowable as a proportion of water body flow for certain water body types;
- Verification that a permit applicant's design intake velocity calculations meet applicable regulatory requirements;
- For certain locations in certain water body types, verification that a permit applicant's intake design and reduction in capacity are commensurate with a level that can be attained by a closed-cycle recirculating cooling water system that has minimized makeup and blowdown flows;
- Review and approval or disapproval of a permit applicant's plan for the required Source Water Baseline Biological Characterization study;
- For certain locations in certain water body types, review and approval or disapproval of a permit applicant's plan for installation of additional design and construction technologies to maximize the survival of impinged fish and minimize entrainment of eggs and larvae;
- Development of draft and final NPDES permit conditions for the applicant implementing applicable section 316(b) requirements pursuant to the proposed regulation; and
- Ensuring compliance with permit conditions based on section 316(b) requirements.

Once the proposed requirements are promulgated as final regulations, EPA will implement them where States or Tribes are not authorized to implement the NPDES program.

F. Are Permits for New Facilities Subject to Requirements Under Other Federal Statutes?

EPA's NPDES permitting regulations at 40 CFR 122.49 contain a list of Federal laws that might apply to federally issued NPDES permits. These include the Wild and Scenic Rivers Act, 16 U.S.C. 1273 *et seq.*; the National Historic Preservation Act of 1966, 16 U.S.C. 470 *et seq.*; the Endangered Species Act, 16 U.S.C. 1531 *et seq.*; the Coastal Zone Management Act, 16 U.S.C. 1451 *et seq.*; and the National Environmental Policy Act, 42 U.S.C. 4321 *et seq.* See 40 CFR 122.49 for a brief description of each of those laws. In addition, the provisions of the Magnuson-Stevens Fishery Conservation and Management Act, 16 U.S.C. 1801 *et seq.*, relating to essential fish habitat might be relevant. Nothing in this proposed rulemaking authorizes activities that are not in compliance with these or other applicable Federal laws.

X. Cost/Benefit Analysis

A. Cost

Total annualized compliance cost of this proposed rule is estimated to be $12.1 million.

Facilities not already meeting section 316(b) requirements would incur several types of costs under the proposed regulation. One-time costs of the rule would include capital technology costs and costs for the initial permit application. Recurring costs would include operating and maintenance costs, permit renewal costs, and costs for monitoring, record keeping, and reporting.

Facilities generally would have several alternatives for complying with the proposed rule's requirements. Alternative compliance responses might include (1) changing the cooling system design so the facility would no longer be subject to the proposed section 316(b) New Facility Rule; (2) changing the facility location, and making alterations to meet requirements based on the new water body type and the distance from the littoral zone; (3) changing the distance from the littoral zone and making alterations to meet requirements based on water body type and the new distance from the littoral zone; and (4) making alterations to facility plans to meet requirements based on the baseline water body type and distance from the littoral zone.

The specific compliance response of each facility would be highly site-specific. For example, it may not be possible for a facility to locate on a different water body type because a suitable site may not be available, or a facility may need to address other cost factors that might support a decision not to relocate despite the opportunity for lower compliance costs. EPA does not have data on which to estimate the potential costs of choosing alternative locations. EPA therefore considered a set of compliance strategies that are most common among existing facilities with cooling water intake structures. Costed compliance actions include widening the intake structure or installing a velocity cap or passive screens to reduce velocity; switching to a recirculating system to reduce intake flow; and implementing additional technologies to reduce impingement and entrainment.

EPA estimated the unit costs associated with these potential regulatory responses. The unit costs were assigned to the 98 new facilities based on their projected baseline characteristics and their requirements under the proposed rule. EPA estimated costs incurred by facilities beginning operations between 2001 and 2020. All capital costs estimates are amortized over 30 years. Since EPA was only able to project new facilities for the first 20 years, the annualized costs based on a 30-year amortization period are somewhat less than they would have been if EPA were able to project new facilities over a long time horizon (30 to 40 years). Moreover, since most of the capital costs for installing closed-cycle recirculating cooling systems are not projected to be incurred until after 2010, these costs are significantly discounted in this analysis.

1. Electric Generation Sector

For the period 2001 through 2010, EPA estimates that 13 new electric generation facilities would be subject to the proposed section 316(b) New Facility Rule.[57] Seven of these facilities are actual planned facilities identified from the NEWGen database. For these facilities, EPA was able to obtain some facility-specific cooling water intake structure information. The remaining six facilities are hypothetical facilities for which no information was available. For the period 2011 through 2020, information on specific, planned facilities is not available. The Agency

[57] See Section VI.B above or Chapter 5 of the *Economic and Engineering Analyses of the Proposed § 316(b) New Facility Rule* for assumptions and methodologies used for this estimate.

used Energy Information Administration forecasts for electric generation capacity for combined-cycle and coal steam electric facilities. Based on this information, EPA projected that an additional 27 facilities would be subject to this proposed rule, for a total of 40 new electric generation facilities over the 20-year period.

For the period 2001 through 2010, EPA estimated facility-level costs for the seven NEWGen facilities found to be within the scope of this regulation. EPA compared each facility's baseline characteristics with the requirements of the rule. If a planned facility already fulfilled any of the applicable requirements, no cost was included in the estimates for meeting that requirement. For example, EPA estimates that 33 of the 40 proposed new generating facilities already plan to build a cooling tower, so 7 facilities are assumed to incur costs for complying with the recirculation requirement of the rule. EPA used the average compliance costs of the seven NEWGen facilities for the six extrapolated facilities. For the period 2011 through 2020, EPA used assumptions described in the *Economic and Engineering Analyses of the Proposed § 316(b) New Facility Rule* to project which facilities would be subject to this proposed rule and whether they would be required to install a cooling tower. For example, based on Energy Information Administration information on the proportion of new generating facilities employing cooling towers in recent years, the Agency estimated that four coal steam electric generating facilities and three combined-cycle facilities would be required to install cooling towers.

Total annualized costs for the 40 new electric generators are estimated to be $6.4 million using a seven percent discount rate and a 30-year analysis period. The lowest annual compliance cost for any electric generator is estimated to be approximately $73,000 or $97 per megawatt of generating capacity; the highest cost is estimated to be $4.1 million or $5,088 per megawatt of generating capacity. Thirty-three facilities are expected to have relatively low compliance costs while 7 facilities will have relatively high costs.[58]

2. Manufacturing Sector

For the period 2001 through 2020, EPA projected that 58 new manufacturing facilities with costs under the proposed rule would begin operation during the next 20 years.[59] All of these facilities are hypothetical facilities estimated based on industry growth rates and responses to the Section 316(b) Industry Screener Questionnaire. Facility-specific operational characteristics of cooling water intake structures and economic and financial characteristics of the projected new facilities were not available. Therefore, EPA used information from screener respondents to project economic and technical characteristics of the new manufacturing facilities.

Based on the projected facility characteristics, EPA estimated facility-level compliance costs using the same unit costs and methodology as for new electric generators. Total annualized costs for the 58 new manufacturing facilities are estimated to be $5.7 million. The lowest annual compliance cost for any facility was approximately $73,000; the highest cost was $0.6 million.

Exhibit 3 provides a summary of the compliance costs for the rule. Details on methods, assumptions and unit costs used to develop engineering compliance costs for steam electric generating and manufacturing facilities are presented in Chapter 6 of the *Economic and Engineering Analyses of the Proposed § 316(b) New Facility Rule.*

EXHIBIT 3.—NATIONAL PRE-TAX COSTS OF COMPLIANCE WITH THE SECTION 316(B) NEW FACILITY REGULATION

Industry category (number of facilities affected)	One-time costs		Recurring costs			Total
	Capital	Permit application	O&M	Permit renewal	Monitoring, record keeping & reporting	
Total Compliance Costs (present value, in millions $1999)						
Electric Generators (40)	$22.5	$1.0	$39.9	$1.5	$15.3	$79.6
Manufacturing Facilities (58)	12.2	1.4	34.3	2.1	20.7	70.7
Total (98)	34.7	2.4	73.6	3.6	36.0	150.9
Annualized Compliance Costs (in $1999)						
Electric Generators (40)	1,809,266	84,401	3,169,779	123,526	1,239,345	6,426,317
Manufacturing Facilities (58)	984,524	111,383	2,761,176	172,307	1,671,369	5,700,759
Total (98)	2,793,790	195,784	5,930,955	295,833	2,910,714	12,127,076

3. Cost Impacts

Exhibit 4 shows that the estimated compliance costs would represent a small portion of the estimated revenues for most of the facilities. Costs as a percentage of baseline revenues would be less than one percent for all the facilities with the exception of eight facilities.[60]

In addition to low impacts at the facility level, impacts at the industry level are expected to be very limited because the projected number and total size of the new facilities that would be within the scope of the proposed rule are generally small compared to the industry as a whole. EPA therefore does not expect the proposed rule to cause significant changes in industry productivity, competition, prices, output, foreign trade, or employment.

In summation, the proposed rule is expected to be economically practicable

[58] The higher costs facilities are expected to come on line in the years 2011, 2014, 2015, 2018, 2019.

[59] See Section VI.B above or Chapter 5 of the *Economic and Engineering Analyses of the Proposed § 316(b) New Facility Rule* for information on assumptions and methodologies used for this estimate.

[60] One steel works facility and one industrial gases facility would have annualized costs equal to 8.8 and 2.4 percent of revenues, respectively. Three electric generators would have annualized costs equal to 4.2% of revenues and another 3 would have annualized costs equal to 1.0% of revenues.

at both the facility and national level for all sectors. Only a small percent of the total number of facilities in each of the manufacturing sectors would be affected by the proposed rule. EPA, therefore, concludes that this rule would not result in a significant impact on industries or the economy.

EXHIBIT 4.—PRE-TAX COMPLIANCE COSTS AND ECONOMIC IMPACTS BY SECTOR

Sector	Number of projected in-scope facilities	Total annualized compliance costs ($mill 1999)	Annualized compliance cost as a percent of facility revenues	
			Lowest	Highest
SIC 49 Steam electric generating	40	6.4	0.07	4.2
SIC 26 Pulp & paper	0	0	NA	NA
SIC 28 Chemicals	48	4.5	0.01	2.4
SIC 29 Petroleum	0	0	NA	NA
SIC 331 Iron & steel	8	1.1	0.01	8.8
SIC 333/335 Aluminum	2	0.07	0.02	0.02
Total	98	12.1		

4. Cost Impacts of Other Alternatives

In addition to today's proposed rule, EPA costed the impacts of two alternative regulatory options. The first alternative option that EPA considered is to apply the BTA requirements proposed for estuaries and tidal rivers to all facilities, regardless of location. Under this option, the definition and number of new facilities subject to the rule would not change, but some facilities would incur more stringent compliance requirements. EPA estimates the total annualized compliance costs for this alternative would be $16.4 million. The second alternative option considered by EPA would impose more stringent compliance requirements on the electric generating segment of the industry. It is based in whole or in part on a zero intake-flow (or nearly zero, extremely low-flow) requirement commensurate with levels achievable through the use of dry cooling systems. New manufacturing facilities would not be subject to these stricter requirements but would have to comply with the standards of the proposed rule. EPA estimated costs for this alternative assuming that the dry cooling standard would apply to electric generators on all waters of the U.S. The costs of this option is estimated to be $193 million per year.

Both alternative regulatory options considered by EPA would have higher total costs than this proposed rule. A regulatory framework based on dry cooling towers for some or all electric generators is the most expensive option. Compared to the proposed rule, this option would impose an additional cost of $181 million, or $20,720 per megawatt of generating capacity, on the electric generating sector. As with the proposed option, the majority of capital costs for these options are projected to occur after 2010, and so are significantly discounted in the analysis.

B. Discussion of Cooling Water Intake Structure Impacts and Potential Benefits

To provide an indication of the potential benefits of adopting BTA for cooling water intake structures, this section presents information from existing sources on impingement and entrainment losses associated with cooling water intake structures, and the economic benefits associated with reducing these losses. Examples are drawn from existing sources because the information needed to quantify and value potential reductions in losses at new facilities is not yet available. In most cases, there is only general information about facility locations, and details of intake characteristics and the ecology of the surrounding water body are unavailable. Such information is critical because studies at existing facilities demonstrate that benefits are highly variable across facilities and locations. Even similar facilities on the same water body can have very different impacts depending on the aquatic ecosystem in the vicinity of the facility, and intake-specific characteristics such as location, design, construction, and capacity.

In general, the probability of impingement and entrainment depends on intake and species characteristics that influence the intensity, time, and spatial extent of interactions of aquatic organisms with a facility's cooling water intake structure and the physical, chemical, and biological characteristics of the source water body. Closed-cycle cooling systems (which are one part of the basis for BTA for all but the least sensitive areas) withdraw water from a natural water body, circulate the water through the condensers, and then send it to a cooling tower or cooling pond before recirculating it back through the condensers. Because cooling water is recirculated, closed-cycle systems generally reduce the water flow from 72 percent to 98 percent, thereby using only 2 percent to 28 percent of the water used by once-through systems. It is generally assumed that this would result in a comparable reduction in impingement and entrainment.

Fish species with free-floating, early life stages are those most susceptible to CWIS impacts. Such planktonic organisms lack the swimming ability to avoid being drawn into intake flows. Species that spawn in nearshore areas, have planktonic eggs and larvae, and are small as adults experience even greater impacts because both new recruits and reproducing adults are affected (*e.g.*, bay anchovy in estuaries and oceans). In general, higher impingement and entrainment are observed in estuaries and near coastal waters due to the presence of spawning and nursery areas. Additionally, tidal currents in estuaries can carry organisms past intakes multiple times, increasing their probability of impingement and entrainment. These observations would tend to support EPA's decision to establish requirements for minimizing adverse environmental impact according to water body type and the placement of the intake structure in relation to biologically productive zones.

The proposed regulatory framework also recognizes that for any given species and cooling water intake structure location, the proportion of the source water flow supplied to the cooling water intake structure is a major factor affecting the potential for impingement and entrainment. In general, if the quantity of water withdrawn is large relative to the flow of the source water body, water

withdrawal would tend to concentrate organisms and increase numbers impinged and entrained. Thus, the proposed flow requirements seek to minimize impingement and entrainment by limiting the proportion of the water body flow that can be withdrawn.

The following five examples from studies at existing facilities offer some indication of the relative magnitude of monetary damages associated with cooling water intake structures at some existing facilities. These examples exhibit the magnitude of impingement and entrainment, on a per facility basis, that could be significantly reduced in the future for similar steam electric facilities under this proposed rule. In the following discussion, the potential benefits of lowering intake flows to a level commensurate with closed-cycle recirculating cooling water system (for the projected 25 percent of facilities not already planning to use such systems) is illustrated by comparisons of once-through and closed-cycle cooling systems (*e.g.*, the Brayton Point and Hudson River facilities). The potential benefits of additional requirements defined by regional permit directors is demonstrated by operational changes implemented to reduce impingement and entrainment (*e.g.*, the Pittsburg and Contra Costa facilities). The Ludington example demonstrates how impingement and entrainment losses of forage species can lead to reductions in economically valuable species. Finally, the potential benefits of implementing additional design and construction technologies to increase survival of organisms impinged or entrained is illustrated by the application of modified intake screens and fish return systems (*e.g.*, the Salem Nuclear Generating Station).

The first example of the potential benefits of minimizing intake flow and associated impingement and entrainment is provided by data for the Brayton Point facility, located on Mt. Hope Bay in Massachusetts.[61] [62] In the mid-1980s, the operation of Unit 4 was changed from closed-cycle to once-through cooling. Although conversion to once-through cooling increased intake flow by 45%, the facility requested the change because of electrical problems associated with salt contamination from Unit 4's salt water spray cooling system. The lower losses expected under closed-cycle operation can be estimated by comparing losses before and after this modification. On this basis, EPA estimates that the average annual reduction in entrainment losses of adult-equivalents of catchable fish resulting from closed cycle operation of a single unit at Brayton Point (reducing the flow of that unit from 1,045 MGD to 703 MGD) ranges from 207,254 Atlantic menhaden (*Brevoortia tyrannus*) and 155,139 winter flounder (*Pleuronectes americanus*) to 20,198 tautog (*Tautoga onitis*) and 7,250 weakfish (*Cynoscion regalis*) per year. Assuming a proportional change in harvest, the lower losses associated with a closed cycle system may be expected to result in an increase of 330,000 to 2 million pounds per year in commercial landings and 42,000 to 128,000 pounds per year in recreational landings.

The second example of the potential benefits of low intake flow is provided by an analysis of impingement and entrainment losses at five Hudson River power plants. Estimated fishery losses under once-through compared to closed-cycle cooling indicate that an average reduction in intake flow of about 95 percent at the three facilities responsible for the greatest impacts would result in a 30 percent to 80 percent reduction in fish losses depending on the species involved.[63] An economic analysis estimated monetary damages under once-through cooling based on the assumption that annual percent reductions in year classes of fish result in proportional reductions in fish stocks and harvest rates.[64] A low estimate of damages was based on losses at all five facilities, and a high estimate was based on losses at the three facilities that account for most of the impacts. Damage estimates under once-through cooling ranged from about $1.3 million to $6.1 million annually in 1999 dollars. Over the next 20 years, EPA projects that seven out of 40 new power plants would be built without recirculating systems in the absence of this rule. Most of the costs projected for the proposed rule are associated with installing recirculating systems as a result of this proposed rule.

The third example demonstrates how impingement and entrainment losses of forage species can lead to reductions in economically valued species. A random utility model (RUM) was used to estimate fishery impacts of impingement and entrainment by the Ludington Pumped-Storage plant on Lake Michigan.[65] [66] This method estimates changes in demand as a function of changes in catch rates. The Ludington facility is responsible for the loss of about 1 percent to 3 percent of the total Lake Michigan production of alewife, a forage species that supports valuable trout and salmon fisheries. It was estimated that losses of alewife result in a loss of nearly 6 percent of the angler catch of trout and salmon each year. On the basis of RUM analysis, the study estimated that if Ludington operations ceased, catch rates of trout and salmon species would increase by 3.3 to 13.7 percent annually, amounting to an estimated recreational angling benefit of $0.95 million per year (in 1999 dollars) for these species alone.

The fourth example indicates the potential benefits of operational BTA that might be required by regional permit Directors. Two plants in the San Francisco Bay/Delta, Pittsburg and Contra Costa in California have made changes to their intake operations to reduce impingement and entrainment of striped bass (*Morone saxatilis*). These operational changes have also reduced incidental take of several threatened and endangered fish species, including the delta smelt (*Hypomesus transpacificus*) and several runs of chinook salmon (*Oncorhynchus tshawytscha*) and steelhead trout (*Oncorhynchus mykiss*). According to technical reports by the facilities, operational BTA reduced striped bass losses by 78 percent to 94 percent, representing an increase in striped bass recreational landings of about 15,000 fish each year. A local study estimated that the consumer surplus of an additional striped bass caught by a recreational angler is $8.87 to $13.77.[67] This implies a benefit to the recreational fishery, from reduced impingement and entrainment of striped

[61] New England Power Company and Marine Research, Inc., *Final Environmental Impact Report and Section 316(a) and 316(b) Demonstrations Made in Connection with the Proposed Conversion of Generating Unit No. 4 from Closed-Cycle Cooling to Once-Through Cooling.* 1981.

[62] Gibson, M. *Comparison of Trends in the Finfish Assemblages of Mt. Hope Bay and Narragansett Bay in Relation to Operations of the New England Power Brayton Point Station.* Rhode Island Division Fish and Wildlife, Marine Fisheries Office, June 1995 and revised August 1996.

[63] Boreman, J. and C.P. Goodyear. ''Estimates of entrainment mortality for striped bass and other fish species inhabiting the Hudson River Estuary.'' *American Fisheries Society Monograph* 4:152–160. 1988.

[64] Rowe, R.D., C.M. Lang, L.G. Chestnut, D.A. Latimer, D.A. Rae, S.M. Bernow, and D.E. White. *The New York Electricity Externality Study, Volume 1.* Empire State Electric Energy Research Corporation. 1995.

[65] Jones, C.A., and Y.D. Sung. *Valuation of Environmental Quality at Michigan Recreational Fishing Sites: Methodological Issues and Policy Applications.* Prepared under EPA Contract No. CR–816247 for the U.S. EPA, Washington, DC. 1993.

[66] Pumped storage facilities do not use cooling water and are therefore would not subject to this proposed rule. However, the concept of economic valuation of losses in forage species is transferable to other types of stressors, including cooling water intake structures.

[67] Huppert D.H. ''Measuring the value of fish to anglers: application to central California anadromous species.'' *Marine Resource Economics* 6:89–107. 1989.

bass alone, in the range of $131,000 to $204,000 annually. The monetary benefit of reduced impingement and entrainment of threatened and endangered species might be substantially greater.

The final example indicates the benefits of technologies that can be applied to maximize survival. At the Salem Nuclear Generating Station in Delaware Bay, the facility's original intake screens were replaced with modified screens and improved fish return baskets that reduce impingement stress and increase survival of impinged fish.[68] The changes resulted in an estimated 51 percent reduction in losses of weakfish. Assuming similar reductions in losses of other recreational and commercial species, this represents an increase in recreational landings of 13,000 to 65,000 fish per year and an increase in angler consumer surplus of as much as $269,000 annually in 1999 dollars. The estimated increase in commercial landings of 700 to 28,000 pounds per year represents an increase in producer surplus of up to $25,000 annually. Assuming that nonuse benefits are at least 50 percent of recreational use benefits, nonuse benefits associated with the screens might be expected to amount to up to $134,000 per year.

A more detailed discussion of cooling water intake structure impacts and potential benefits can be found Chapter 11 of the *Economic and Engineering Analyses of the Proposed § 316(b) New Facility Rule.*

The Agency recognizes that limited data, if any, are available on impingement and entrainment rates at facilities with intake flows at or near the flow threshold proposed today or the alternative flow thresholds discussed in Section V.D. above. The Agency specifically invites commenters to provide any data they may have on impingement and/or entrainment rates at facilities with total intake flows at or below 30 MGD.

XI. Administrative Requirements

A. Paperwork Reduction Act

The information collection requirements in this proposed rule have been submitted for approval to the Office of Management and Budget (OMB) under the Paperwork Reduction Act, 44 U.S.C. 3501 *et seq.* EPA has prepared an Information Collection Request (ICR) document (ICR No. 1973.01) and you may obtain a copy from Sandy Farmer by mail at Collection Strategies Division; U.S. Environmental Protection Agency (2822); 1200 Pennsylvania Ave., NW., Washington, DC 20007, by e-mail at farmer.sandy@epamail.epa.gov, or by calling (202) 260–2740. You also can download a copy off the Internet at http://www.epa.gov/icr.

The total burden of the information collection requirements associated with today's rule is estimated at 46,849 hours. The corresponding cost for costs other than labor (labor costs are included in the total cost of the rule discussed in section X of this preamble) is estimated at $1.03 million for 22 facilities and 44 States and Territories for the first three years after promulgation of the rule. Non-labor costs, include activities such as laboratory services, photocopying, and the purchase of supplies. The burden and costs are for the information collection, reporting, and record keeping requirements for the three-year period beginning with the assumed effective date of today's rule. Additional information collection requirements will occur after this initial three-year period and will be counted in a subsequent information collection request. EPA does not consider the specific data that would be collected under this proposed rule to be confidential business information. However, if a respondent does consider this information to be confidential, the respondent may request that such information be treated as confidential. All confidential data will be handled in accordance with 40 CFR 122.7, 40 CFR part 2, and EPA's Security Manual Part III, Chapter 9, dated August 9, 1976.

Compliance with the applicable information collection requirements imposed under this proposed rule (see §§ 125.86,125.87, and 125.88) is mandatory. Before new facilities can begin operation, they would be required first to perform several data-gathering activities as part of the permit application process. Today's proposal would require several distinct types of information collection as part of the NPDES application. In general, the information would be used to identify which of the requirements in today's proposed rule apply to the new facility, how the new facility would meet those requirements, and whether the new facility's cooling water intake structure reflects the best technology available for minimizing adverse environmental impact. Specific data requirements proposed are the following:

- Source water data for evaluation of potential impacts to the water body in which the intake structure is placed.
- Intake structure data, consisting of intake structure design and facility water balance diagram, to evaluate the potential for impingement and entrainment of aquatic organisms.
- Baseline ambient biological data, in the form of a Source Water Baseline Biological Characterization study, for evaluating potential impacts from the cooling water intake structure prior to the start of operation.
- Information on additional design and construction technologies implemented to ensure compliance with the applicable requirements set forth in today's proposed rule.

In addition to the information requirements of the NPDES permit application, NPDES permits normally specify monitoring and reporting requirements to be met by the permitted entity. New facilities that fall within the scope of this rule would be required to perform biological monitoring of impingement and entrainment, monitoring of the screen or through-technology velocity, and visual inspections of the cooling water intake structure and any additional technologies. Additional ambient water quality monitoring may also be required of facilities depending on the specifications of their permit. The facility would be expected to analyze the results its monitoring efforts and then provide these results in an annual status report to the permitting authority. Finally, facilities would be required to maintain records of all submitted documents, supporting materials, and monitoring results for at least three years (the director may require that records be kept for a longer period to coincide with the life of the NPDES permit) .

All the impacted facilities would have to carry out the specific activities necessary to fulfill the general information requirements. The estimated burden to comply with these requirements is associated with describing and drawing the physical configurations of the source water body where the cooling water intake structures are located and documenting the delineation of the littoral zone, submerged vegetation, and substrate characteristics of the water body in relation to each cooling water intake structure. The activities costed out also include sampling, analyzing, and reporting the results in a Source Water Baseline Biological Characterization Study before the operation of the cooling water intake structures and developing a water balance diagram that

[68] Ronafalvy, J.P., R.R. Cheesman, and W.M. Matejek. ''Circulating water traveling screen modifications to improve impinged fish survival and debris handling at Salem Generating Station.'' Presentation at Power Generation Impacts on Aquatic Resources Conference, Atlanta Georgia, April 12–15, 1999.

can be used to identify the proportion of intake water used for cooling, make-up, and process water. Some of the facilities would need to perform additional activities in relation to velocity and flow reduction requirements. The estimates also incorporate the cost of preparing a narrative description of the design, structure, equipment, and operation to meet the velocity, flow, and flow reduction requirements.

In addition to the activities mentioned above, some facilities would need to prepare and submit a plan describing the design and characteristics of additional technologies to be installed to maximize the survival of aquatic organisms, and to minimize the impingement and entrainment of organisms. The estimates for some facilities also incorporate the cost of the sampling, analyzing, and reporting of the impinged and entrained organisms during a biological cycle, and velocity monitoring and biweekly inspections of the operation of the installed technologies.

Exhibit 5 presents a summary of the maximum burden estimates for a facility to prepare a permit application, along with the monitoring and reporting of cooling water intake structures operations.

EXHIBIT 5.—MAXIMUM BURDEN AND COSTS PER FACILITY FOR NPDES PERMIT APPLICATION AND MONITORING AND REPORTING ACTIVITIES

Activities	Burden (hr)	Labor cost	Other direct costs [a]
Start-up activities	43	$1,330	$50
General information activities	252	6,512	500
Source water baseline biological characterization activities [b]	404	11,655	1,250
Flow standard activities	104	2,495	100
Velocity standard activities	138	3,690	1,000
Flow reduction commensurate with closed-cycle recirculating	98	2,478	400
Additional design and construction technology implementation plan	85	2,372	50
Subtotal	1,124	30,532	3,350
Maximum Burden and Costs per Facility for Annual Monitoring and Reporting Activities			
Biological monitoring (impingement)	238	$6,736	$2,000
Biological monitoring (entrainment)	530	14,675	4,000
Velocity monitoring	163	4,169	100
Visual inspection	253	6,831	100
Yearly status report activities	340	10,634	750
Subtotal	1,524	43,045	6,950

[a] Cost of supplies, filing cabinets, photocopying, boat renting, etc.
[b] The Source Water Baseline Biological Characterization Study also has contracted service costs associated with it.

The proposed changes to the NPDES permit process would require States to devote time and resources to reviewing and responding to the NPDES permit applications, implementation plans, and annual status reports submitted to them. EPA assumed that all 43 States and one territory with NPDES permitting authority will undergo start-up activities in preparation for administering the provisions of the New Facility Rule. As part of these start-up activities States are expected to train junior technical staff on how to review materials submitted by facilities, and then use these materials to determine the specific conditions of each facility's NPDES permit with regard to the facility's cooling water intake structure.

Each State's actual burden associated with reviewing submitted materials, writing permits, and tracking compliance depends on the number of new in-scope facilities that will be built in the State during the ICR approval period. EPA expects that State senior technical, junior technical, and clerical staff will spend time gathering, preparing, and submitting the various documents. EPA's burden estimates reflect the general staffing and level of expertise that is typical in States that administer the NPDES permitting program. EPA considered the time and qualifications necessary to complete various tasks such as reviewing submitted documents and supporting materials, verifying data sources, planning responses, determining specific permit requirements, writing the actual permit, and conferring with facilities and the interested public. Exhibit 6 provides a summary of the burden estimates for States performing various activities associated with the proposed rule.

EXHIBIT 6.—ESTIMATING STATE BURDEN AND COSTS FOR ACTIVITIES

Activities	Burden (hrs)	Labor cost	ODC ($)
State start-up activities (per State)	100	$3,004	$50

EXHIBIT 6.—ESTIMATING STATE BURDEN AND COSTS FOR ACTIVITIES—Continued

Activities	Burden (hrs)	Labor cost	ODC ($)
State permit issuance activities (per facility)	116	3,182	300
Annual State activities (per facility)	50	1,419	50

Burden means the total time, effort, or financial resources expended by persons to generate, maintain, retain, or disclose or provide information to or for a Federal agency. This includes the time needed to review instructions; develop, acquire, install, and utilize technology and systems for the purposes of collecting, validating, and verifying information, processing and maintaining information, and disclosing and providing information; adjust the existing procedures to comply with any previously applicable instructions and requirements; train personnel to be able

to respond to a collection of information; search data sources; complete and review the collection of information; and transmit or otherwise disclose the information.

An Agency may not conduct or sponsor, and a person is not required to respond to a collection of information, unless it displays a currently valid OMB control number. The OMB control numbers for EPA's regulations are listed in 40 CFR part 9 and 48 CFR Chapter 15.

EPA requests comments on the Agency's need for this information, the accuracy of the provided burden estimates, and any suggested methods for minimizing respondent burden, including through the use of automated collection techniques. Send comments on the ICR to the Director, Collection Strategies Division; U.S. Environmental Protection Agency (2822); 1200 Pennsylvania Ave., NW.; Washington, DC 20460; and to the Office of Information and Regulatory Affairs; Office of Management and Budget; 725 17th Street; NW., Washington, DC 20503, marked ''Attention: Desk Officer for EPA.'' Include the ICR number in any correspondence. Because OMB is required to make a decision concerning the ICR between 30 and 60 days after August 10, 2000, a comment is most likely to have its full effect if OMB receives it by September 11, 2000. The final rule will respond to any OMB or public comments on the information collection requirements contained in this proposal.

B. Unfunded Mandates Reform Act

Title II of the Unfunded Mandates Reform Act of 1995 (UMRA), Pub. L. 104–4, establishes requirements for Federal agencies to assess the effects of their regulatory actions on State, local, and Tribal governments and the private sector. Under section 202 of UMRA, EPA generally must prepare a written statement, including a cost-benefit analysis, for proposed and final rules with ''Federal mandates'' that might result in expenditures to State, local, and Tribal governments, in the aggregate, or to the private sector, of $100 million or more in any one year. Before promulgating an EPA rule for which a written statement is needed, section 205 of UMRA generally requires EPA to identify and consider a reasonable number of regulatory alternatives and adopt the least costly, most cost-effective, or least burdensome alternative that achieves the objectives of the rule. The provisions of section 205 do not apply when they are inconsistent with applicable law. Moreover, section 205 allows EPA to adopt an alternative other than the least costly, most cost-effective, or least burdensome alternative if the Administrator publishes with the final rule an explanation why that alternative was not adopted. Before EPA establishes any regulatory requirements that might significantly or uniquely affect small governments, including Tribal governments, it must have developed under section 203 of the UMRA a small government agency plan. The plan must provide for notifying potentially affected small governments, enabling officials of affected small governments to have meaningful and timely input in the development of EPA regulatory proposals with significant intergovernmental mandates, and informing, educating, and advising small governments on compliance with regulatory requirements.

EPA has determined that this rule does not contain a Federal mandate that might result in expenditures of $100 million or more for State, local, and Tribal governments, in the aggregate, or the private sector in any one year. Total annualized compliance and implementation costs are estimated to be $12.2 million. Of the total, the private sector accounts for $11.9 million and the government sector (includes direct compliance costs for facilities owned by government entities) accounts for $0.26 million. EPA calculated annualized costs by estimating initial and annual expenditures by facilities and regulatory authorities over the 30-year period (2001–2031), calculating the present value of that stream of expenditures using a 7 percent discount rate. EPA estimates that the highest undiscounted costs incurred by the private sector and government sector in any one year are approximately $36.2 million and $0.29 million, respectively. Thus, today's rule is not subject to the requirements of sections 202 and 205 of UMRA.

This rule is not expected to impact small governments. A municipality that owns or operates a electric generation facility is the primary category of small government operations that might be affected by a rule, regulating cooling water intake structures. Existing data indicates that no new municipal electric generation facilities are going to be constructed in the next ten years. In addition, to minimize cost, this proposed rule excludes facilities that take in less than two (2) million gallons per day. Details and methodologies used for these estimations are included in the *Economic and Engineering Analysis of the Proposed Section 316(b) New Facility Rule,* which is in the docket for today's proposal.

EPA has determined that this proposed rule contains no regulatory requirements that might significantly or uniquely affect small governments. The proposal, if promulgated, would not establish requirements that would affect small governments. Thus, today's proposed rule is not subject to the requirements of section 203 of UMRA.

C. Regulatory Flexibility Act (RFA) as Amended by the Small Business Regulatory Enforcement Fairness Act of 1996 (SBREFA), 5 U.S.C. 601 et seq.

The RFA generally requires an agency to prepare a regulatory flexibility analysis of any rule subject to notice and comment rulemaking requirements under the Administrative Procedure Act or any other statute unless the agency certifies that the rule will not have a significant economic impact on a substantial number of small entities. Small entities include small businesses, small organizations, and small governmental jurisdictions.

Today's proposed rule is intended to minimize the adverse environmental impact from cooling water intake structures and regulates industries that use cooling water withdrawn directly from waters of the U.S. The primary impact would be on steam electric generating facilities (SIC 4911); however, a number of other industries might also be regulated, including but not limited to paper and allied products (primary SIC 26), chemical and allied products (primary SIC 28), petroleum and coal products (primary SIC 29), and primary metals (primary SIC 33).

For the purposes of assessing the impacts of today's rule on small entities, small entity is defined as: (1) A small business according to SBA size standards; (2) a small governmental jurisdiction that is a government of a city, county; town, school district or special district with a population of less than 50,000; and (3) a small organization that is not-for-profit enterprise which is independently owned and operated and is not dominant in its field. This proposed rule is expected to regulate only a small absolute number of facilities owned by small entities, that represent a very small percentage of all facilities owned by small entities in their respective industries. EPA has estimated that 20 facilities owned by small entities would be regulated by this proposed rule. Of the 20 facilities owned by small entities, 14 are projected to be steam electric generating facilities and 6 to be manufacturing facilities. EPA does not anticipate that today's proposed rule would regulate any small governments or nonprofit entities.

After considering the economic impacts of today's proposed rule on small entities, the Agency certifies that this action will not have a significant economic impact on a substantial number of small entities for reasons explained below.

1. Electric Generation Sector

EPA has described the process by which prospective new steam electricity generating facilities were identified and how EPA determined whether such facilities are subject to today's proposed rule elsewhere in this preamble and in Chapter 5 of the *Economic and Engineering Analysis of the Proposed § 316(b) New Facility Rule.* As described in Chapter 8 of the economic and engineering support document, EPA then identified those facilities subject to the rule whose parent firm or government owner would qualify as a small entity pursuant to the SBA size standard for electrical utilities. The Small Business Administration defines a small steam electric generator as a firm whose facilities generated 4 million megawatt-hours output or less in the proceeding year. From that analysis, EPA has determined that 14 facilities owned by small businesses within the steam electric generating industry are likely to be regulated by today's proposed rule. The only government-owned facility that met the SBA criteria was owned by a State and States are not considered small governments.

The estimated annualized compliance costs that facilities owned by small entities would likely incur represent between 0.07 to 0.15 percent of estimated facility annual sales revenue.[69] In addition, EPA was able to assess impacts based on the ratio of initial costs to plant construction costs. The results of both screening analyses indicated very low impacts at the facility level. Consequently, the costs to the parent small entity would be even lower.

The absolute number of small entities potentially subject to this rule is low. This is not unexpected since the total number of facilities subject to this rule is also low. This is the case, even though the electric power industry is currently experiencing a rapid expansion and transition due to deregulation and new Clean Air Act requirements for emissions controls, and a large number of generating plants are under construction or planned for the early years after promulgation of the proposed rule. First, there is a trend toward construction of combined-cycle technologies using natural gas, which use substantially less cooling water than other technologies. Second, there has been a decline in the use of surface water as the source of cooling water. The NEWGen sample data shows a trend away from the use of surface cooling water. It is indicated that 80 percent of the sampled facilities use alternative sources of cooling water (e.g., grey water, ground water, and municipal water). EPA believes this trend reflects the increased competition for water, an increasing awareness of the need for water conservation, and increased local opposition to the use of surface water for power generation. Taken together, the trend toward combined-cycle generating technologies, which have small cooling water requirements per unit of output, and the trend away from the use of surface cooling water result in a low projected number of regulated facilities, despite the expected expansion in new generating capacity.

2. Manufacturing Sector

Chapter 5 of the *Economic and Engineering Analysis of the Proposed § 316 (b) New Facility Rule* shows that 58 new manufacturing facilities are expected to incur compliance costs under the proposed section 316(b) New Facility Rule. Since EPA's estimate of new manufacturing facilities is based on industry growth forecasts and not on specific planned facilities, actual parent firm information was not available. EPA therefore developed profiles of representative facilities based on the characteristics of existing facilities identified in the screener survey EPA used to identify an appropriate sample of existing facilities for detailed analysis as part of § 316(b) rulemaking for existing facilities.[70]

On the basis of the comparison of each representative facility's parent firm employment with the SBA small entity size standard for the firm's SIC code (the small entity size standards are expressed in terms of employees (500 to 1000 employees)), only 6 of the 58 new manufacturing facilities are projected to be owned by a small entity. Four of the 6 facilities are in the chemicals sector and 2 are in the metals sector. EPA used annualized costs as a percentage of annual sales revenue to assess impacts for manufacturing firms. Again, the test was applied at the facility rather than the firm level, which provides a conservative estimate of the impacts because the ratio of costs to revenues generally would be lower at the firm level than at the individual facility level. Once again, the impact analysis showed a negligible impact on small entities, because the effect on facility sales revenue was so low (0.02 to 0.31 percent). Although EPA was able to assess impacts for only a limited number of plants owned by small entities, the Agency believes that the results for these plants would be representative of other plants owned by small entities.

EPA has conducted extensive outreach to industry associations and organizations representing small government jurisdictions to identify small-entity manufacturing facilities. Based on the outreach effort and a review of the relevant industry trade literature, EPA concludes that although the exact number of facilities owned by small entities that would be subject to the proposed rule is difficult to quantify, it is evident that for the foreseeable future few, if any, small entities would be affected. EPA estimates that only 1.9 percent of all future facilities owned by small entities will use cooling water at levels that would bring them within the scope of this regulation.

The small number of small entities subject to this rule in the manufacturing sector is not surprising because the facilities likely to be subject to the proposed rule are large industrial facilities that are not generally owned by small entities. There are multiple reasons for the limited projected number of in-scope new facilities owned by small entities. The major factors responsible, depending on which

[69] In addition to 7 known planned facilities, EPA estimated that additional hypothetical facilities potentially regulated by this proposed rule will begin operating during the next 20 years. Based on information on the known facilities and expected characteristics of the projected facilities, EPA estimates that impacts on other facilities owned by small firms would also be low.

[70] For each SIC code that included one projected new facility, EPA sorted screener respondents in that SIC code by the number of employees at a facility. EPA selected the facility with the median employment value as the representative facility and used that facility's reported firm characteristics (employment and sales revenues) for this small entity analysis. Data from the Dun & Bradstreet database were used where information on the firm was not available in the screener. In cases where more than one new facility is projected in an SIC code, EPA again sorted the screener respondents by number of employees at a facility. EPA then divided the screener respondents into as many subcategories as the projected number of new facilities in the SIC code. Finally, EPA used employment and sales revenue data from the median employment facility in each subcategory to represent the projected new facility for this small entity analysis. Data from the Dun & Bradstreet database were used where information on the firm was not available in the screener survey. The document, *Economic and Engineering Analysis of the Proposed § 316(b) New Facility Rule,* provides more detailed information on how facility and firm characteristics for the 58 new manufacturing facilities were determined.

industry sector is considered, include industry downsizing; expansion of capacity at existing facilities as a means of meeting increased demand; mergers and acquisitions that reduce the overall number of firms; and addition of a significant number of new facilities in at least one industry sector as part of a recently completed expansion cycle so that additional new facilities are not expected for the foreseeable future. The segments of the industries that are the primary users of cooling water are mostly large, capital intensive enterprises with few, if any, small businesses within their ranks. Moreover, these industries are particularly subject to the impacts of globalization, including competitive pressures from low-cost foreign producers, providing a strong incentive for domestic industry to consolidate to secure the market share and realize production efficiencies. In addition, startup or expansion of the type of industrial facilities subject to today's proposed rule requires significant capital, which small businesses cannot easily secure. The nature of manufacturing enterprises using cooling water at the levels addressed by today's proposed rule is generally inconsistent with small business activity.

Finally, a minimum flow cutoff of 2 MGD is likely to exempt a significant number of small facilities from the requirements of the proposed rule. Therefore, EPA believes it is reasonable to conclude that in the foreseeable future there will be a negligible increase in the number of in-scope small facilities in these manufacturing industries.

Exhibit 7 summarizes the results of Regulatory Flexibility Act/Small Business Regulatory Enforcement Fairness Act analysis. From the small absolute number of facilities owned by small entities that would be affected by the proposed rule, and the very low impacts at the facility level, EPA concludes that the proposed rule will not have a significant economic impact on a substantial number of small entities.

EXHIBIT 7.—SUMMARY OF RFA/SBREFA ANALYSIS

Type of facility	Number of facilities owned by small entities	Annual compliance costs/annual sales revenue	Initial compliance cost/ construction cost
Steam electric generating facilities	14	0.07% to 0.15%.	0.01% to 0.01%.
Manufacturing facilities	6	0.02% to 0.31%.	Data not available.
Total	20	0.02% to 0.31%.	0.01% to 0.01%.

One reason why this proposed rule would not have a significant economic impact on a substantial number of small entities is that EPA has established a flow level of greater than 2 MGD as the level below which facilities would be exempt from the requirements of the proposed rule. This minimum flow level exempts many facilities using small amounts of water, including facilities owned by small entities, while covering approximately 90% of the total cooling water withdrawn from the waters of the U.S. EPA also conducted extensive outreach to industry associations and organizations that represent small entities, to determine how this rule would affect their small entity constituents.

We continue to be interested in the potential impacts of the proposed rule on small entities and welcomes comments on issues related to such impacts.

D. Executive Order 12866: Regulatory Planning and Review

Under Executive Order 12866, (58 FR 51735, October 4, 1993) the Agency must determine whether the regulatory action is ''significant'' and therefore subject to OMB review and the requirements of the Executive Order. The order defines a ''significant regulatory action'' as one that is likely to result in a rule that may:

- Have an annual effect on the economy of $100 million or more or adversely affect in a material way the economy, a sector of the economy, productivity, competition, jobs, the environment, public health or safety, or State, local, or Tribal governments or communities;
- Create a serious inconsistency or otherwise interfere with an action taken or planned by another agency;
- Materially alter the budgetary impact of entitlements, grants, user fees, or loan programs or the rights and obligations of recipients thereof; or
- Raise novel legal or policy issues arising out of legal mandates, the President's priorities, or the principles set forth in the Executive Order.

Pursuant to the terms of Executive Order 12866, it has been determined that this proposed rule is a ''significant regulatory action.'' As such, this action was submitted to OMB for review. Changes made in response to OMB suggestions or recommendations will be documented in the public record.

E. Executive Order 13132: Federalism

Executive Order 13132 (64 FR 43255, August 10, 1999) requires EPA to develop an accountable process to ensure ''meaningful and timely input by State and local officials in the development of regulatory policies that have federalism implications.'' ''Policies that have federalism implications'' is defined in the Executive Order to include regulations that have ''substantial direct effects on the States, on the relationship between the national government and the States, or on the distribution of power and responsibilities among the various levels of government.''

Under section 6 of Executive Order 13132, EPA may not issue a regulation that has federalism implications, that imposes substantial direct compliance costs, and that is not required by statute unless the Federal government provides the funds necessary to pay the direct compliance costs incurred by State and local governments or EPA consults with State and local officials early in the process of developing the proposed regulation. EPA also may not issue a regulation that has federalism implications and that preempts State law, unless the Agency consults with State and local officials early in the

process of developing the proposed regulation.

This proposed rule does not have federalism implications. It will not have substantial direct effects on the States, on the relationship between the national government and the States, or on the distribution of power and responsibilities among the various levels of government, as specified in Executive Order 13132. Rather, this proposed rule would result in minimal administrative costs on States that have an authorized NPDES program. EPA expects an annual burden of 2,339 hours with an annual cost of $3,200 (non-labor costs) for States to collectively administer this proposed rule. Also, based on meetings and subsequent discussions with local government representatives from municipal utilities, EPA believes that the proposed new facility rule may affect, at most, only two large municipalities that own steam electric generating facilities. The annual impacts on these facilities is not expected to exceed 1,304 burden hours and $36,106 (non-labor costs) per facility.

The proposed national cooling water intake structure requirements would be implemented through permits issued under the NPDES program. Forty-three States and the Virgin Islands are currently authorized pursuant to section 402(b) of the CWA to implement the NPDES program. In States not authorized to implement the NPDES program, EPA issues NPDES permits. Under the CWA, States are not required to become authorized to administer the NPDES program. Rather, such authorization is available to States if they operate their programs in a manner consistent with section 402(b) and applicable regulations. Generally, these provisions require that State NPDES programs include requirements that are as stringent as Federal program requirements. States retain the ability to implement requirements that are broader in scope or more stringent than Federal requirements. (See section 510 of the CWA.)

Today's proposed rule would not have substantial direct effects on either authorized or nonauthorized States or on local governments because it would not change how EPA and the States and local governments interact or their respective authority or responsibilities for implementing the NPDES program. Today's proposed rule establishes national requirements for new facilities with cooling water intake structures. NPDES-authorized States that currently do not comply with the final regulations based on today's proposal might need to amend their regulations or statutes to ensure that their NPDES programs are consistent with Federal section 316(b) requirements. See 40 CFR 123.62(e). For purposes of this proposed rule, the relationship and distribution of power and responsibilities between the Federal government and the States and local governments are established under the CWA (*e.g.*, sections 402(b) and 510); nothing in this proposed rule would alter that. Thus, the requirements of section 6 of the Executive Order do not apply to this rule.

Although section 6 of Executive Order 13132 does not apply to this rule, EPA did consult with State governments and representatives of local governments in developing the proposed rule. During the development of the proposed Section 316(b) rule for new facilities, EPA conducted several outreach activities through which State and local officials were informed about this proposal and they provided information and comments to the Agency. The outreach activities were intended to provide EPA with feedback on issues such as adverse environmental impact, BTA, and the potential cost associated with various regulatory alternatives.

EPA held two public meetings in the summer of 1998 to discuss issues related to the section 316(b) rulemaking effort. Representatives from New York and Maryland attended the meetings and provided input to the Agency. The 316(b) workgroup also contacted Pennsylvania and Virginia to exchange information on this issue. In addition, EPA Regions 1, 3, 4, and 9 served as conduits for transmittal of section 316(b) information between the Agency and several States. More recently, EPA met with industry, environmental, and State and Federal government representatives, during May, June, and July of this year to discuss regulatory alternatives for the new facility proposal. Comments from these meetings helped EPA to evaluate and revise draft regulatory framework alternatives.

In the spirit of this Executive Order and consistent with EPA policy to promote communications between EPA and State and local governments, EPA specifically solicits comment on this proposed rule from State and local officials.

F. Executive Order 12898: Federal Actions To Address Environmental Justice in Minority Populations and Low-Income Populations

Executive Order 12898 requires that, to the greatest extent practicable and permitted by law, each Federal agency must make achieving environmental justice part of its mission. E.O. 12898 provides that each Federal agency must conduct its programs, policies, and activities that substantially affect human health or the environment in a manner that ensures that such programs, policies, and activities do not have the effect of excluding persons (including populations) from participation in, denying persons (including populations) the benefits of, or subjecting persons (including populations) to discrimination under such programs, policies, and activities because of their race, color, or national origin.

Today's proposed rule would require that the location, design, construction, and capacity of cooling water intake structures at new facilities reflect the best technology available for minimizing adverse environmental impact. For several reasons, EPA does not expect that this proposed rule would have an exclusionary effect, deny persons the benefits of the NPDES program, or subject persons to discrimination because of their race, color, or national origin. The proposed rule applies only to new facilities with cooling water intake structures that withdraw waters of the U.S. As discussed previously, EPA anticipates that this proposed rule would not affect a large number of new facilities; therefore, any impacts of the proposed rule would be limited. The proposed rule does include location criteria that would affect siting decisions made by new facilities, these criteria are intended to prevent deterioration of our nation's aquatic resources. EPA expects that this proposed rule would preserve the health of aquatic ecosystems located in reasonable proximity to new cooling water intake structures and that all populations, including minority and low-income populations, would benefit from such improved environmental conditions. In addition, because the proposed rule would help prevent decreases in populations of fish and other aquatic species, it is likely to help maintain the welfare of subsistence and other low-income fishermen or minority low-income populations.

G. Executive Order 13045: Protection of Children From Environmental Health Risks and Safety Risks

Executive Order 13045 (62 FR 19885, April 23, 1997) applies to any rule that (1) is determined to be ''economically significant'' as defined under Executive Order 12866, and (2) concerns an environmental health or safety risk that EPA has reason to believe might have a disproportionate effect on children. If the regulatory action meets both criteria, the Agency must evaluate the

environmental health and safety effects of the planned rule on children, and explain why the planned regulation is preferable to other potentially effective and reasonably feasible alternatives considered by the Agency. This proposed rule is not an economically significant rule as defined under Executive Order 12866 and does not involve an environmental health or safety risk that would have a disproportionate effect on children. Therefore, it is not subject to Executive Order 13045. Further, this rule does not concern an environmental health or safety risk that EPA has reason to believe may disproportionately affect children.

H. Executive Order 13084: Consultation and Coordination With Indian Tribal Governments

Under Executive Order 13084, EPA may not issue a regulation that is not required by statute, that significantly or uniquely affects the communities of Indian Tribal governments, and that imposes substantial direct compliance costs on those communities unless the Federal government provides the funds necessary to pay the direct compliance costs incurred by the Tribal governments or EPA consults with those governments. If EPA complies by consulting, Executive Order 13084 requires EPA to provide to the Office of Management and Budget, in a separately identified section of the preamble to the rule, a description of the extent of EPA's prior consultation with representatives of affected Tribal governments, a summary of the nature of their concerns, and a statement supporting the need to issue the regulation. In addition, Executive Order 13084 requires EPA to develop an effective process permitting elected and other representatives of Indian Tribal governments ''to provide meaningful and timely input in the development of regulatory policies on matters that significantly or uniquely affect their communities.''

Today's proposed rule does not significantly or uniquely affect the communities of Indian Tribal governments. Given the available data on new facilities and the applicability thresholds in the proposed rule, EPA estimates that no new facilities subject to the rule will be owned by Tribal governments. This rule does not affect Tribes in anyway in the foreseeable future. Accordingly, the requirements of section 3(b) of Executive Order 13084 do not apply to this rule.

I. National Technology Transfer and Advancement Act

Section 12(d) of the National Technology Transfer and Advancement Act (NTTAA) of 1995, Pub L. No. 104–113, Sec. 12(d) directs EPA to use voluntary consensus standards in its regulatory activities unless to do so would be inconsistent with applicable law or otherwise impractical. Voluntary consensus standards are technical standards (*e.g.*, materials specifications, test methods, sampling procedures, and business practices that are developed or adopted by voluntary consensus standard bodies. The NTTAA directs EPA to provide Congress, through the Office of Management and Budget (OMB), explanations when the Agency decides not to use available and applicable voluntary consensus standards.

This proposed rule does not involve such technical standards. Therefore, EPA is not considering the use of any voluntary consensus standards. EPA welcomes comments on this aspect of the proposed rule and , specifically, invites the public to identify potentially applicable voluntary consensus standards and to explain why such standards should be used in this proposed rule.

J. Plain Language Directive

Executive Order 12866 and the President's memorandum of June 1, 1998, require each agency to write all rules in plain language. We invite your comments on how to make this proposed rule easier to understand. For example: Have we organized the material to suit your needs? Are the requirements in the rule clearly stated? Does the rule contain technical language or jargon that isn't clear? Would a different format (grouping and order of sections, use of headings, paragraphing) make the rule easier to understand? Would more (but shorter) sections be better? Could we improve clarity by adding tables, lists, or diagrams? What else could we do to make the rule easier to understand?

K. Executive Order 13158: Marine Protected Areas

Executive Order 13158 (65 FR 34909, May 31, 2000) requires EPA to ''expeditiously propose new science-based regulations, as necessary, to ensure appropriate levels of protection for the marine environment.'' EPA may take action to enhance or expand protection of existing marine protected areas and to establish or recommend, as appropriate, new marine protected areas. The purpose of the executive order is to protect the significant natural and cultural resources within the marine environment, which means ''those areas of coastal and ocean waters, the Great Lakes and their connecting waters, and submerged lands thereunder, over which the United States exercises jurisdiction, consistent with international law.''

This proposed rule recognizes that there are sensitive biological areas within tidal rivers, estuaries, oceans, and the Great Lakes that are more susceptible to adverse environmental impact from cooling water intake structures. The location of cooling water intake structures is a key factor in minimizing adverse environmental impact. This proposal provides incentives for facilities to locate their cooling water intake structures outside these sensitive biological areas. In those cases where a facility does locate a cooling water intake structure inside these sensitive areas, EPA is proposing that the facility meet the most stringent requirements to minimize adverse environmental impact. This proposed rule would improve the survivability of impinged organisms and reduce the rate of entrained organisms. Therefore, EPA expects this proposal will advance the objective of the executive order to protect marine areas. However, because Executive Order 13158 is new as of May 26, 2000 and EPA has not yet developed implementing regulations, it may be necessary to change the requirements for marine protected areas under this proposal to comply with any future EPA regulations developed to further the objectives of this executive order (*e.g.*, it may be necessary to prohibit or severely limit cooling water withdrawals from marine protected areas).

XII. Solicitation of Comments and Data

A. Specific Solicitation of Comment and Data

As noted in the above sections, EPA solicits comments and data on many individual topics throughout this preamble. The Agency incorporates all such requests for comment here and reiterates its interest in receiving comments and data on the issues addressed by those requests. In addition, EPA particularly requests comments and data on the following issues:

1. EPA solicits comment on the proposed section 316(b) requirements and the methods used to determine the benefit and cost impact values supporting this proposed regulation.

2. EPA solicits comment on the potential impact of the proposed rule on

small entities and on issues related to such impacts.

3. EPA solicits comment on the scope and applicability of the proposed rule, including how EPA has proposed to define ''new facility,'' ''cooling water intake structure,'' the various thresholds that determine the scope of the rule, and the alternative BTA provisions considered by the Agency.

4. EPA solicits data and comment on the number and types of new facilities potentially subject to today's proposed rule.

5. EPA solicits data and comment on the environmental impacts caused by cooling water intake structures at new facilities.

6. EPA solicits comment on appropriate definitions of ''adverse environmental impact'' for purposes of the proposed rule, including whether EPA should include a definition of adverse environmental impact in the final rule or guidance.

7. EPA solicits comment on the frameworks proposed and considered for BTA, including but not limited to the proposed requirements for flow, velocity, location (distance from the littoral zone), and use of additional design and construction technologies.

8. EPA solicits comment on whether it should allow site-specific flexibility in the determination of BTA, and if so, under which of the regulatory approaches discussed in this preamble.

9. EPA solicits comment on the possible use of restoration measures.

10. EPA solicits comment on how the Agency has considered the cost for new facilities to comply with the proposed BTA requirements.

11. EPA solicits comment on how the proposed cooling water intake structure requirements would be implemented, including the need for and burden associated with monitoring, recordkeeping, reporting, and study requirements.

12. EPA solicits comment on how endangered and threatened species are considered under the proposed rule.

13. EPA solicits comment on the monitoring requirement and other approaches that could be used to ensure that the design intake velocity is not exceeded once the facility is built and operating.

14. EPA solicits comment on whether additional procedural provisions are necessary to establish or clarify the permitting process for new facilities employing cooling water intake structures.

B. General Solicitation of Comment

EPA encourages public participation in this rulemaking. EPA asks that comments address any perceived deficiencies in the record supporting this proposal and that suggested revisions or corrections be supported by data.

EPA invites all parties to coordinate their data collection activities with the Agency to facilitate mutually beneficial and cost-effective data submissions. Please refer to the **FOR FURTHER INFORMATION** section at the beginning of this preamble for technical contacts at EPA.

To ensure that EPA can properly respond to comments, the Agency prefers that commenters cite, where possible, the paragraph(s) or sections in the document or supporting documents to which each comment refers. Please submit an original and two copies of your comments and enclosures (including references).

List of Subjects

40 CFR Part 9

Environmental protection, Reporting and recordkeeping requirements.

40 CFR Part 122

Administrative practice and procedure, Confidential business information, Hazardous substances, Reporting and recordkeeping requirements, Water pollution control.

40 CFR Part 123

Administrative practice and procedure, Confidential business information, Hazardous substances, Indians-lands, Intergovernmental relations, Penalties, Reporting and recordkeeping requirements, Water pollution control, .

40 CFR Part 124

Administrative practice and procedure, Air pollution control, Hazardous waste, Indians-lands, Reporting and recordkeeping requirements, Water pollution control, Water supply.

40 CFR Part 125

Cooling water intake structures, Reporting and recordkeeping requirements, Waste treatment and disposal, Water pollution control.

Dated: July 20, 2000.

Carol M. Browner,

Adminstrator.

BILLING CODE 6560–50–P

Appendix 1 to Preamble—Littoral Zone Example

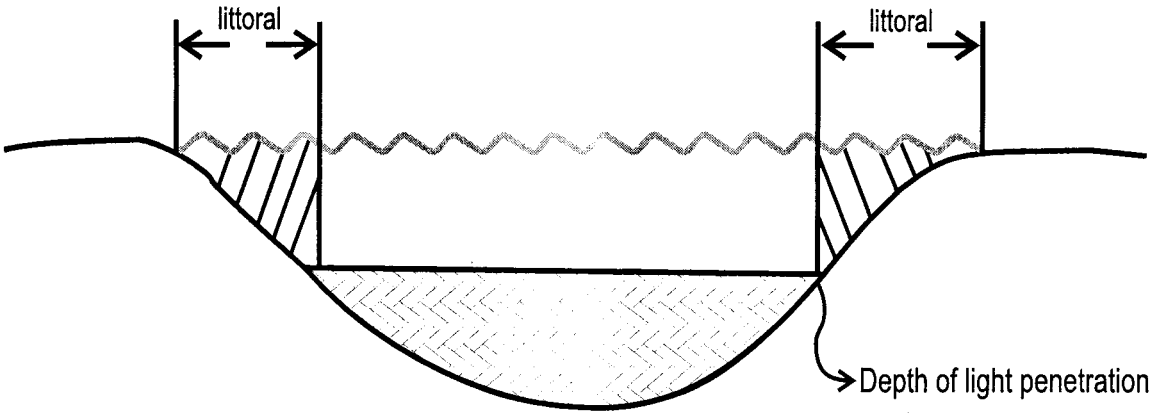

APPENDIX 2 TO PREAMBLE—ILLUSTRATION OF FLOW REQUIREMENT FOR ESTUARIES AND TIDAL RIVERS

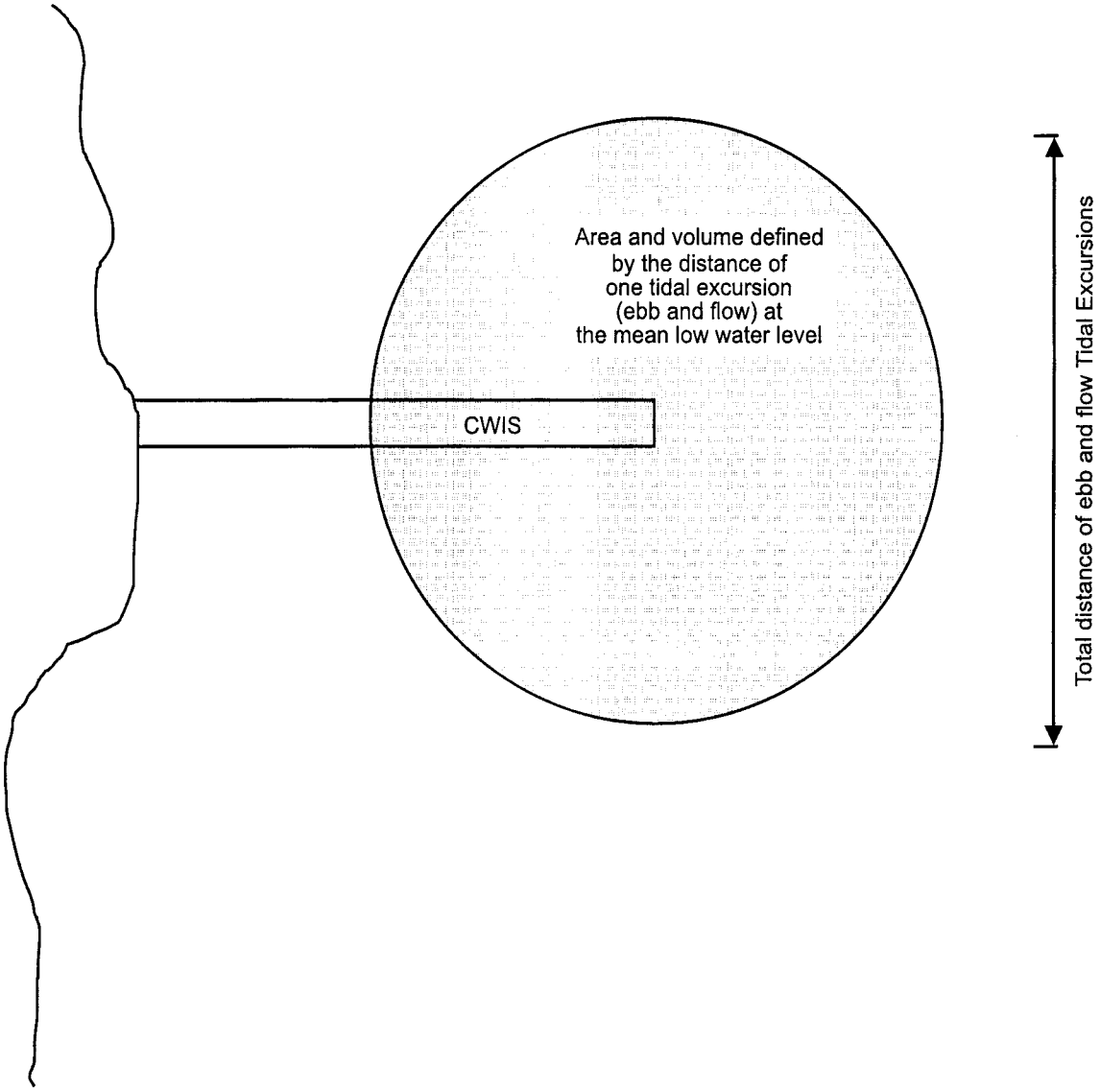

APPENDIX 3 TO PREAMBLE—EXAMPLES OF AREAS AND VOLUMES DEFINED IN ESTUARIES OR TIDAL RIVERS BY THE TIDAL EXCURSION DISTANCE

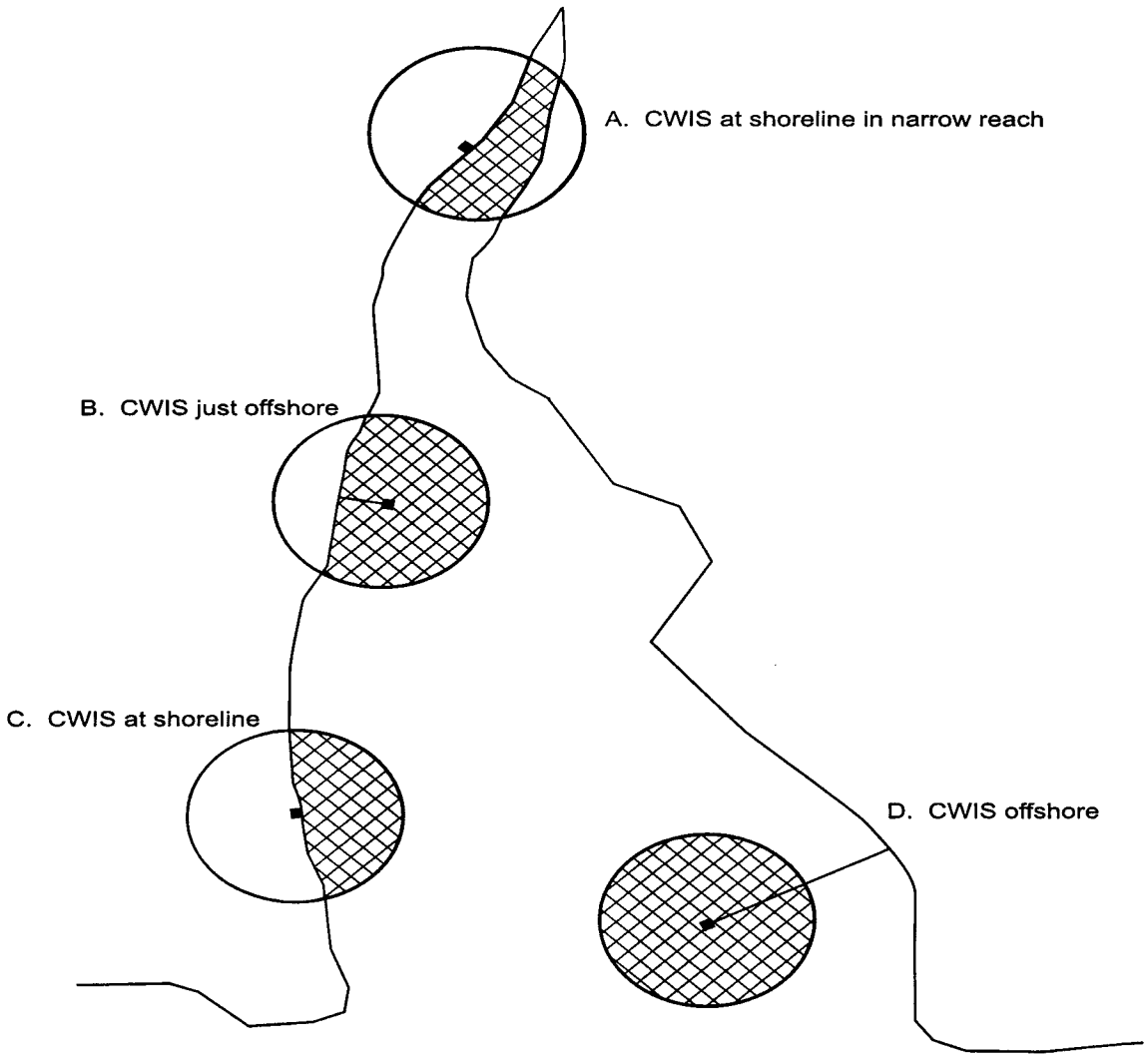

CWIS = Cooling Water Intake Structure

BILLING CODE 6560–50–C

For the reasons set forth in the preamble, chapter I of title 40 of the Code of Federal Regulations is proposed to be amended as follows:

PART 9—OMB APPROVALS UNDER THE PAPERWORK REDUCTION ACT

1. The authority citation for part 9 continues to read as follows:

Authority: 7 U.S.C. 135 *et seq.*, 136–1136y; 15 U.S.C. 2001, 2003, 2005, 2006, 2601–2671, 21 U.S.C. 331j, 346a, 348; 31 U.S.C. 9701; 33 U.S.C. 1251 *et seq.*, 1311, 1313d, 1314, 1318, 1321, 1326, 1330, 1342, 1344, 11345 (d) and (e), 1361; E.O. 11735, 38 FR 21243, 3 CFR, 1971–1975 Comp. p. 973; 42 U.S.C. 241, 242b, 243, 246, 300f, 300g, 300g–1, 300g–2, 300g–3, 300g–4, 300g–5, 300g–6, 300j–1, 300j–2, 300j–3, 300j–4, 300j–9, 1857 *et seq.*, 6901–6992k, 7401–7671q, 7542, 9601–9657, 11023, 11048.

2. In § 9.1 the table is amended by adding entries in numerical order under the indicated heading to read as follows:

§ 9.1 OMB approvals under the Paper Work Reduction Act.

* * * * *

40 CFR citation	OMB control no.
* * * * *	
Criteria and Standards for the National Pollutant Discharge Elimination System	
* * * * *	
125.85	2040–
125.87	2040–
* * * * *	

PART 122—EPA ADMINISTERED PERMIT PROGRAMS: THE NATIONAL POLLUTANT DISCHARGE ELIMINATION SYSTEM

1. The authority citation for part 122 continues to read as follows:

Authority: The Clean Water Act, 33 U.S.C. 1251 *et seq.*

2. Amend § 122.21 by adding a new paragraph (r)(1) to read as follows:

§ 122.21 Application for a permit (applicable to State programs, see § 123.25)

* * * * *

(r) *Applications for facilities with cooling water intake structures*—(1) *New facilities with new or modified cooling water intake structures.* New facilities with cooling water intake structures as defined in part 125, subpart I of this chapter must report the information required under § 125.86 of this chapter. Requests for alternative requirements under § 125.85 of this chapter must be submitted with your permit application.

(2) [Reserved].

3. Amend § 122.44 to add paragraph (b)(3) to read as follows:

§ 122.44 Establishing limitations, standards, and other permit conditions (applicable to State NPDES programs, see § 123.25).

* * * * *

(b) * * *

(3) Requirements applicable to cooling water intake structures at new facilities under section 316(b) of the CWA, in accordance with part 125, subpart I of this chapter.

* * * * *

PART 123—STATE PROGRAM REQUIREMENTS

1. The authority citation for part 123 continues to read as follows:

Authority: The Clean Water Act, 33 U.S.C. 1251 *et seq.*

2. Amend § 123.25 to revise paragraph (a)(36) to read as follows:

§ 123.25 Requirements for permitting.

(a) * * *

(36) Subparts A, B, D, H, and I of part 125 of this chapter.

* * * * *

PART 124—PROCEDURES FOR DECISIONMAKING

1. The authority citation for part 124 continues to read as follows:

Authority: Resource Conservation and Recovery Act, 42 U.S.C. 6901 *et seq.*; Clean Water Act, 33 U.S.C. 1251 *et seq.*; and Clean Air Act, 42 U.S.C. 1857 *et seq.*

2. Amend § 124.10 to redesignate paragraph (d)(1)(ix) as paragraph (d)(1)(x) and to add a new paragraph (d)(1)(ix) to read as follows:

§ 124.10 Public notice of permit actions and public comment period.

* * * * *

(d) * * *

(1) * * *

(ix) Requirements applicable to cooling water intake structures at new facilities under section 316(b) of the CWA, in accordance with part 125, subpart I of this chapter.

* * * * *

PART 125—CRITERIA AND STANDARDS FOR THE NATIONAL POLLUTANT DISCHARGE ELIMINATION SYSTEM

1. The authority citation for part 125 continues to read as follows:

Authority: Clean Water Act, as amended by the Clean Water Act of 1977, 33 U.S.C. 1251 *et seq.*, unless otherwise noted.

2. Add subpart I to part 125 to read as follows:

Subpart I—Requirements Applicable to Cooling Water Intake Structures for New Facilities under Section 316(b) of the Act

Sec.

125.80 What are the purpose and scope of this subpart?
125.81 Who is subject to this subpart?
125.82 When must I comply with this subpart?
125.83 What special definitions apply to this subpart?
125.84 As an owner or operator of a new facility, what must I do to comply with this subpart?
125.85 May alternative requirements be imposed?
125.86 As an owner or operator of a new facility, what must I collect and submit when I apply for my new or reissued NPDES permit to show that I am complying with this subpart?
125.87 As an owner or operator of a new facility, must I perform monitoring?
125.88 As an owner or operator of a new facility, must I keep records and report?
125.89 As the Director, what must I do to comply with the requirements of this subpart?

Subpart I—Requirements Applicable to Cooling Water Intake Structures for New Facilities under Section 316(b) of the Act

§ 125.80 What are the purpose and scope of this subpart?

(a) This subpart establishes requirements that apply to the location, design, construction, and capacity of cooling water intake structures at new facilities. The purpose of these requirements is to minimize adverse environmental impact associated with the use of cooling water intake structures. These requirements must be implemented through National Pollutant Discharge Elimination System (NPDES) permits issued under section 402 of the Clean Water Act (CWA).

(b) This subpart implements section 316(b) of the CWA for new facilities. Section 316(b) of the CWA provides that any standard established pursuant to sections 301 or 306 of the CWA and applicable to a point source shall require that the location, design, construction, and capacity of cooling water intake structures reflect the best technology available for minimizing adverse environmental impact.

(c) Nothing in this subpart shall be construed to preclude or deny the right of any State or political subdivision of a State or any interstate agency under section 510 of the CWA to adopt or enforce any requirement with respect to control or abatement of pollution that is

more stringent than those required by Federal law.

§ 125.81 Who is subject to this subpart?

This subpart applies to all new facilities that propose to use a cooling water intake structure; that are, or will be, subject to a National Pollutant Discharge Elimination System (NPDES) permit; and that have a design intake flow of greater than two (2) million gallons per day (MGD).

§ 125.82 When must I comply with this subpart?

New facilities subject to this subpart must comply with this subpart before they begin to withdraw cooling water.

§ 125.83 What special definitions apply to this subpart?

When used in this subpart:

7Q10 means the lowest average seven-consecutive-day low flow with an average recurrence frequency of once in 10 years determined hydrologically.

Annual mean flow means the average of daily flows over a calendar year. Historical data (up to 10 years) should be used where available.

Closed-cycle recirculating system means a system designed, using minimized makeup and blowdown flows, to withdraw water from a natural or other water source to support contact and noncontact cooling uses within a facility. The water is usually sent to a cooling canal or channel, lake, pond, or tower to allow waste heat to be dissipated and then is returned to the system. (Some facilities divert the waste heat to other process operations.) New source water (makeup water) is added to the system to replenish losses that have occurred due to blowdown, drift, and evaporation.

Cooling water means water used for contact or noncontact cooling, including water used for air conditioning, equipment cooling, evaporative cooling tower makeup, and dilution of effluent heat content. The intended use of the cooling water is to absorb waste heat rejected from the process or processes used, or from auxiliary operations on the facility's premises.

Cooling water intake structure means the total physical structure and any associated constructed waterways used to withdraw water from waters of the U.S., provided that at least 25 percent of the water withdrawn is used for cooling purposes. The cooling water intake structure extends from the point at which water is withdrawn from the surface water source to the first intake pump or series of pumps.

Design intake flow means the value assigned (during the facility's design) to the total volume of water withdrawn from a source water body over a specific time period.

Design intake velocity means the value assigned (during the design of a cooling water intake structure) to the average speed at which intake water passes through the open area of the intake screen (or other device) against which organisms might be impinged or through which they might be entrained.

Entrainment means the incorporation of fish, eggs, larvae, and other plankton with intake water flow entering and passing through a cooling water intake structure and into a cooling water system.

Estuary means all or part of the mouth of a river or stream or other body of water having an unimpaired natural connection with open seas and within which the seawater is measurably diluted with fresh water derived from land drainage. The salinity of an estuary exceeds 0.5 parts per thousand (by mass) but is less than 30 parts per thousand (by mass).

Existing facility means any facility that is not a new facility.

Freshwater river or stream means a lotic (free-flowing) system that does not receive significant inflows of water from oceans or bays due to tidal action.

Impingement means the entrapment of aquatic organisms on the outer part of an intake structure or against a screening device during periods of intake water withdrawal.

Lake means any inland body of open water with some minimum surface area free of rooted vegetation and with an average hydraulic retention time of more than 7 days. Lakes might be natural water bodies or impounded streams, usually fresh, surrounded by land or by land and a man-made retainer (*e.g.,* a dam). Lakes might be fed by rivers, streams, springs, and/or local precipitation.

Littoral zone means any nearshore area in a freshwater river or stream, lake or reservoir, or estuary or tidal river extending from the level of highest seasonal water to the deepest point at which submerged aquatic vegetation can be sustained (*i.e.,* the photic zone extending from shore to the substrate receiving one (1) percent of incident light); where there is a significant change in slope that results in changes to habitat and/or community structure; and where there is a significant change in the composition of the substrate (*e.g.*, cobble to sand, sand to mud). In oceans, the littoral zone encompasses the photic zone of the neritic region. The photic zone is that part of the water that receives sufficient sunlight for plants to be able to photosynthesize. The neritic region is the shallow water or nearshore zone over the continental shelf.

Maximize means to increase to the greatest possible amount, extent, or degree.

Minimize means to reduce to the smallest possible amount, extent, or degree.

Natural thermal stratification means the naturally occurring division of a waterbody into horizontal layers of differing densities as a result of variations in temperature at different depths.

New facility means any building, structure, facility, or installation that meets the definition of a ''new source'' or ''new discharger;'' in 40 CFR 122.2 and 122.29(b)(1), (2), and (4); commences construction after [the effective date of the final rule]; and has a new or modified cooling water intake structure.

Ocean means marine open coastal waters with a salinity greater than or equal to 30 parts per thousand (by mass).

Reservoir means any natural or constructed basin where water is collected and stored.

Source water means the water body (waters of the U.S.) from which the cooling water is withdrawn.

Tidal excursion means the horizontal distance along the estuary that a particle moves during one tidal cycle of ebb and flow.

Tidal river means the most seaward reach of a river or stream where the salinity is less than or equal to 0.5 parts per thousand (by mass) at a time of annual low flow and whose surface elevation responds to the effects of coastal lunar tides.

§ 125.84 As an owner or operator of a new facility, what must I do to comply with this subpart?

(a) If your new facility's cooling water intake structure is located in any of the types of water bodies in the first column of the following table, you must comply with the requirements in the second column.

If your cooling water intake structure is located in a[n] . . .	Then . . .
(1) Freshwater river or stream.	You must comply with paragraphs (b), (f), and (g) of this section and applicable requirements in § 125.86 (application requirements), § 125.87 (monitoring requirements), and § 125.88 (recordkeeping requirements).
(2) Lake or reservoir	You must comply with paragraphs (c), (f), and (g) of this section and applicable requirements in § 125.86 (application requirements), § 125.87 (monitoring requirements), and § 125.88 (recordkeeping requirements).
(3) Estuary or tidal river.	You must comply with paragraphs (d), (f), and (g) of this section and applicable requirements in § 125.86 (application requirements), § 125.87 (monitoring requirements), and § 125.88 (recordkeeping requirements).
(4) Ocean	You must comply with paragraphs (e), (f), and (g) of this section and applicable requirements in § 125.86 (application requirements), § 125.87 (monitoring requirements), and § 125.88 (recordkeeping requirements).

(b) If your new facility has one or more cooling water intake structures located in a freshwater river or stream, you must comply with the requirements of paragraphs (b)(1), (b)(2), or (b)(3) of this section. A table summarizing the applicable requirements follows.

TABLE-SUMMARY OF REQUIREMENTS FOR FRESHWATER RIVERS OR STREAMS BASED ON THE LOCATION OF THE COOLING WATER INTAKE STRUCTURE

Requirements	Location of Cooling Water Intake Structure Opening		
	≧ 50 Meters Outside Littoral Zone [§ 125.84(b)(1)]	< 50 Meters Outside Littoral Zone [§ 125.84(b)(2)]	Inside Littoral Zone [§ 125.84(b)(3)]
1. Design intake flow ≦5% source water annual mean flow or ≦25% of source water 7q10	✔	✔	✔
2. Design intake velocity ≦0.5 ft/s	✔	✔	✔
3. Reduce intake flow to a level commensurate with a closed cycle recirculating cooling water system		✔	✔
4. Implement additional design and construction technologies			✔

(1) If the opening to your cooling water intake structure is located at least 50 meters outside the littoral zone in a freshwater river or stream, you must meet all of the following requirements:

(i) The total design intake flow from all cooling water intake structures at your facility must be no more than the more stringent of 5 percent of the source water annual mean flow or 25 percent of the source water 7Q10;

(ii) The maximum design intake velocity at each cooling water intake structure at your facility must be no more than 0.5 ft/s.

(2) If the opening to your cooling water intake structure is located less than 50 meters outside the littoral zone in a freshwater river or stream, you must meet all of the following requirements:

(i) The total design intake flow from all cooling water intake structures at your facility must be no more than the more stringent of 5 percent of the source water annual mean flow or 25 percent of the source water 7Q10;

(ii) The maximum design intake velocity at each cooling water intake structure at your facility must be no more than 0.5 ft/s;

(iii) You must reduce your intake flow to a level commensurate with that which can be attained by a closed-cycle recirculating cooling water system;

(3) If the opening to your cooling water intake structure is located inside the littoral zone in a freshwater river or stream, you must meet all of the following requirements:

(i) The total design intake flow from all cooling water intake structures at your facility must be no more than the more stringent of 5 percent of the source water annual mean flow or 25 percent of the source water 7Q10;

(ii) The maximum design intake velocity at all cooling water intake structures at your facility must be no more than 0.5 ft/s;

(iii) You must reduce your intake flow to a level commensurate with that which can be attained by a closed-cycle recirculating cooling water system;

(iv) You must implement additional design and construction technologies that minimize impingement and

entrainment of fish, eggs, and larvae and maximize survival of impinged adult and juvenile fish;

(c) If your new facility has one or more cooling water intake structures located in a lake or reservoir, you must comply with the requirements of paragraphs (c)(1), (c)(2), or (c)(3) of this section. A table summarizing the applicable requirements follows.

TABLE-SUMMARY OF REQUIREMENTS FOR LAKES OR RESERVOIRS BASED ON THE LOCATION OF THE COOLING WATER INTAKE STRUCTURE

Requirements	Location of Cooling Water Intake Structure Opening		
	≧50 Meters Outside Littoral Zone [§ 125.84(c)(1)]	≦50 Meters Outside Littoral Zone [§ 125.84(c)(2)]	Inside Littoral Zone [§ 125.84(c)(3)]
1. Design intake flow must not alter the natural thermal stratification	✔	✔	✔
2. Design intake velocity ≦0.5 ft/s		✔	✔
3. Reduce intake flow to a level commensurate with a closed cycle recirculating cooling water system		✔	✔
4. Implement additional design and construction technologies			✔

(1) If the opening to your cooling water intake structure is located at least 50 meters outside the littoral zone in a lake or reservoir, you must meet all of the following requirements: The total design intake flow at your facility must not alter the natural thermal stratification of the source water.

(2) If the opening to your cooling water intake structure is located less than 50 meters outside the littoral zone in a lake or reservoir, you must meet all of the following requirements:

(i) The total design intake flow at your facility must not alter the natural thermal stratification of the source water;

(ii) The maximum design intake velocity at each cooling water intake structure at your facility must be no more than 0.5 ft/s;

(iii) You must reduce your intake flow to a level commensurate with that which can be attained by a closed-cycle recirculating cooling water system;

(3) If the opening to your cooling water intake structure is located inside the littoral zone in a lake or reservoir, you must meet all of the following requirements:

(i) The total design intake flow at your facility must not alter the natural thermal stratification of the source water;

(ii) The maximum design intake velocity at each cooling water intake structure at your facility must be no more than 0.5 ft/s;

(iii) You must reduce your intake flow to a level commensurate with that which can be attained by a closed-cycle recirculating cooling water system;

(iv) You must implement additional design and construction technologies that minimize impingement and entrainment of fish, eggs, and larvae and maximize survival of impinged adult and juvenile fish;

(d) If your new facility has one or more cooling water intake structures located in an estuary or a tidal river, you must comply with the requirements of paragraph (d)(1) of this section. A table summarizing the applicable requirements follows.

TABLE-SUMMARY OF REQUIREMENTS FOR ESTUARIES OR TIDAL RIVERS BASED ON THE LOCATION OF THE COOLING WATER INTAKE STRUCTURE

Requirements for estuaries or tidal rivers	Location of Cooling Water Intake Structure Opening
	Anywhere in Estuary or Tidal River [§ 125.84(d)(1)]
1. Design intake flow ≦1% of the volume of the water column (see 125.84(d)(1))	✔
2. Design intake velocity ≦0.5 ft/s	✔
3. Reduce intake flow to a level commensurate with a closed cycle recirculating cooling water system	✔
4. Implement additional design and construction technologies	✔

(1) If the opening to your cooling water intake structure is located anywhere in an estuary or a tidal river, you must meet all of the following requirements:

(i) The total design intake flow from all cooling water intake structures at your facility must be no greater than one (1) percent of the volume of the water column within the area centered about the opening of the intake with a diameter defined by the distance of one tidal excursion at the mean low water level;

(ii) The maximum design intake velocity at all cooling water intake structures at your facility must be no more than 0.5 ft/s;

(iii) You must reduce your intake flow to a level commensurate with that which can be attained by a closed-cycle recirculating cooling water system;

(iv) You must implement additional design and construction technologies that minimize impingement and entrainment of fish, eggs, and larvae and maximize survival of impinged adult and juvenile fish;

(e) If your new facility has one or more cooling water intake structures located in an ocean, you must comply with the requirements of paragraphs (e)(1) or (2) of this section. A table summarizing the applicable requirements follows.

TABLE-SUMMARY OF REQUIREMENTS FOR OCEANS BASED ON THE LOCATION OF THE COOLING WATER INTAKE STRUCTURE

Requirements	Location of cooling water intake structure opening	
	Outside littoral zone [§ 125.84(e)(1)]	Inside littoral zone [§ 125.84(e)(2)]
1. Design intake velocity ≤ 0.5 ft/s	✔	✔
2. Reduce intake flow to a level commensurate with a closed cycle recirculating cooling water system		✔
3. Implement additional design and construction technologies		✔

(1) If the opening to your cooling water intake structure is located outside the littoral zone in an ocean, you must meet all of the following requirements:

(i) The maximum design intake velocity at each cooling water intake structure at your facility must be no more than 0.5 ft/s.

(2) If the opening to your cooling water intake structure is located inside the littoral zone in an ocean, you must meet all of the following requirements:

(i) The maximum design intake velocity at each cooling water intake structure at your facility must be no more than 0.5 ft/s;

(ii) You must reduce your intake flow to a level commensurate with that which can be attained by a closed-cycle recirculating cooling water system;

(iii) You must implement additional design and construction technologies that minimize impingement and entrainment of fish, eggs, and larvae and maximize survival of impinged adult and juvenile fish;

(f) The Director may include more stringent requirements in the permit than those specified in paragraphs (a) through (e) of this section if he or she determines that they are reasonably necessary to minimize impingement and entrainment as a result of the effects of multiple cooling water intake structures in the same body of water; seasonal variations in the aquatic environment affected by the cooling water intake structures controlled by the permit; or the presence of regionally important species.

(g) The Director must include any more stringent requirements relating to the location, design, construction, and capacity of a cooling water intake structure at a new facility that are reasonably necessary to ensure attainment of water quality standards, including designated uses, criteria, and antidegradation requirements.

§ 125.85 May alternative requirements be imposed?

(a) Any interested person may request that alternative requirements less stringent than those specified in § 125.84(a) through (e) be imposed in the permit. The Director also may propose alternative requirements in the draft permit. A request for the establishment of alternative requirements less stringent than the requirements of § 125.84(a) through (e) may be approved only if:

(1) There is an applicable requirement under § 125.84(a) through (e);

(2) Data specific to the facility indicate that compliance with the requirement at issue would result in compliance costs wholly out of proportion to the costs EPA considered in establishing the requirement at issue;

(3) The alternative requirement requested is no less stringent than justified by the wholly out of proportion cost; and

(4) The alternative requirement will ensure compliance with sections 208(e) and 301(b)(1)(C) of the Clean Water Act.

(b) The burden is on the person requesting the alternative requirement to demonstrate that alternative requirements should be imposed. The requester should refer to all relevant information, including the support documents for this rulemaking, all associated data collected for use in developing each requirement, and other relevant information that is kept on public file by EPA to demonstrate that the appropriate requirements of paragraph (a) of this section have been met.

§ 125.86 As an owner or operator of a new facility, what must I collect and submit when I apply for my new or reissued NPDES permit to show that I am complying with this subpart?

(a) *Source water baseline biological characterization.* As an owner or operator of a new facility, you must begin to collect source water baseline biological characterization data at least 1 year before you must submit your permit application to the Director.

(1) This information is required to evaluate the condition of the biological community and to identify potential (and/or to minimize actual) entrainment and impingement impacts from each cooling water intake structure. The Director will use the information to determine compliance with requirements involving additional design and construction technology requirements and the need for more stringent requirements under § 125.84(f) and (g). As part of this evaluation, you must collect data on both nekton and meroplankton to determine the abundance of relevant species or taxa, and life stages in the water column in the vicinity of each proposed or actual cooling water intake structure. Based on the available life history information and collected data, you also must determine which species and life stages would be most susceptible to impingement or entrainment. With the Director's approval, you may use existing data instead of actual field studies. You must comply with the following requirements and document them in a report submitted to the Director.

(2)(i) If you are required to comply with the requirements in § 125.84(b)(3), (c)(3), (d)(1), or (e)(2), you must develop a sampling plan that documents all methods and quality assurance procedures for data collection, sampling, and analysis. You must submit this plan to the Director for review and approval before any sampling activities begin.

(ii) If you are required to comply with the requirements in § 125.84(b)(1), (b)(2), (c)(1), (c)(2), or (e)(1), you must develop a sampling plan that documents all methods and quality assurance procedures for data collection, sampling, and analysis and maintain the plan at your facility. You are *not* required to submit this plan to the Director.

(iii) The sampling and data analysis methods you propose must be appropriate for a quantitative survey and based on a consideration of methods used in other biological studies performed in the source water body. The study area should include, at a minimum, the area of influence of the cooling water intake structure. The sampling plan must include a

description of the study area (which must include the area of influence of the cooling water intake structure and at least 100 meters beyond); a list and description of other relevant studies; a proposal to use data in lieu of actual sampling (if applicable); identification of the biological assemblages to be sampled (both nekton and meroplankton); data collection, sampling, and analysis methods; and any public participation or consultation with Federal or State agencies undertaken in development of the plan.

(3) All owners or operators of new facilities must comply with the following requirements:

(i) Identify up to ten (10) species most important in terms of significance to commercial and recreational fisheries and the forage base.

(ii) Identify all threatened and endangered species that might be susceptible to impingement and entrainment.

(iii) Conduct a sampling program covering at least a 1-year cycle of biological activity in the vicinity of the cooling water intake structure. If you are required to submit a sampling plan to the director in paragraph (a) (2)(i) of this section, the sampling must be based on the Director's approved sampling plan.

(iv) Determine which species are most susceptible to impingement or entrainment based on the information collected and the primary period of reproduction, larval recruitment, and peak meroplankton abundance.

(b) As an owner or operator of a new facility, you must submit the following information to the Director when you apply for a new or reissued NPDES permit in accordance with 40 CFR 122.21:

(1) *Source water physical data.* As an owner or operator of a new facility, you must submit the following source water information that demonstrates and supports a determination of the appropriate requirements to apply to your cooling water intake structures.

(i) A narrative description and scaled drawings showing the physical configuration of all source water bodies, including areal dimensions, depths, salinity regimes, and other documentation that supports your determination of the water body type where each cooling water intake structure is located;

(ii) A narrative description of the configuration of each cooling water intake structure and where it is located in the water body and in the water column;

(iii) Documentation delineating the littoral zone of the water body in the vicinity of each cooling water intake structure, including light penetration and hydromorphological data, submerged aquatic vegetation, substrate data, and a demonstration of where the cooling water intake structure is located in relation to the littoral zone; and

(iv) Latitude and longitude in degrees, minutes, and seconds for each of your cooling water intake structures;

(v) Engineering drawings and locational maps to illustrate the information required by paragraphs (b)(1)(i), (ii), and (iii) of this section.

(vi) A report documenting the results of the Source Water Baseline Characterization required in paragraph (a) of this section.

(2) *Cooling water intake structure flow data.* As an owner or operator of a new facility, you must submit the following information that demonstrates and supports a determination of the appropriate requirements to apply to your cooling water intake structures.

(i) A narrative description of the operation of all cooling water intake structures, including design intake flows, daily hours of operation, and seasonal changes, if applicable; and

(ii) A flow distribution and water balance diagram that includes all sources of water to the facility, recirculating flows, and discharges.

(3) *Flow requirements.* If you must comply with the cooling water intake structure flow requirements in § 125.84(b)(2)(iii), (b)(3)(iii), (c)(2)(iii), (c)(3)(iii), (d)(1)(iii), (e)(1)(ii), or (e)(2)(iii), you must submit the following information to the Director:

(i) If your cooling water intake structure is located in a freshwater river or stream, you must provide the annual mean and 7Q10 flows and any supporting documentation and engineering calculations to show that your cooling water intake structure meets the flow requirements.

(ii) If your cooling water intake structure is located in an estuary or tidal river, you must provide the mean low water tidal excursion distance and any supporting documentation and engineering calculations to show that your cooling water intake structure facility meets the flow requirements.

(iii) If your cooling water intake structure is located in a lake or reservoir, you must provide a narrative description of the water body stratification, and any supporting documentation and engineering calculations to show that the stratification will not be upset by the design intake flow.

(4) *Velocity requirement.* If you must comply with the cooling water intake structure velocity requirement in § 125.84(b)(1)(ii), (b)(2)(ii), (b)(3)(ii), (c)(2)(ii), (c)(3)(ii), (d)(1)(ii), (e)(1)(i), or (e)(2)(i), you must submit the following information to the Director:

(i) A narrative description of the design, structure, equipment, and operation used to meet the velocity requirement; and

(ii) Design calculations showing that the velocity requirement will be met at minimum ambient source water surface elevation and maximum head loss across the screens or other device.

(5) *Flow reduction requirement.* If you must comply with the requirement to reduce your flow to a level commensurate with that which can be attained by a closed-cycle recirculating cooling water system in § 125.84(b)(2)(iii), (b)(3)(iii), (c)(2)(iii), (c)(3)(iii), (d)(1)(iii), (e)(1)(ii), or (e)(2)(ii), you must submit a narrative description of the closed-cycle recirculating cooling water system design and any engineering calculations, including documentation demonstrating that your make-up and blowdown have been minimized. If you meet the flow reduction requirement by reusing 100 percent of the cooling water withdrawn from a source water, you must provide a demonstration that 100 percent of the cooling water is reused in one or more unit processes at the facility.

(6) *Additional design and construction technology requirement.* If you must comply with the requirement in § 125.84(b)(3)(iv), (c)(3)(iv), (d)(2)(iv), or (e)(2)(iii) to implement additional design and construction technologies that maximize the survival of impinged adult and juvenile fish and minimize the entrainment of fish, eggs, and larvae, you must submit to the Director for review and approval a plan that contains information on the technologies you propose to implement based on the results of the Source Water Baseline Biological Characterization required by § 125.86(a). The plan must contain the following information:

(i) A narrative description of the design and operation of any additional design and construction technologies, including fish-handling and return systems, that you will use to maximize the survival of those species expected to be most susceptible to impingement. Provide species-specific information that demonstrates the efficacy of the technology.

(ii) A narrative description of the design and operation of any additional design and construction technologies that you will use to minimize entrainment of those species expected to be the most susceptible to entrainment. Provide species-specific information

that demonstrates the efficacy of the technology.

(iii) Design calculations, drawings, and estimates to support the descriptions provided in paragraphs (b)(6)(i) and (ii) of this section.

(7) *Data to support alternative requirements.* If you are seeking alternative requirements under § 125.85, you must submit data that demonstrate that your compliance costs are wholly out of proportion to the costs considered by EPA in establishing the requirements in § 125.84 (a) through (e).

(8) *Other data.* As an owner or operator you must submit other information required by the Director to determine appropriate requirements and other permit conditions to minimize adverse environmental impact.

§ 125.87 As an owner or operator of a new facility, must I perform monitoring?

As an owner or operator of a new facility, you will be required to perform monitoring to demonstrate your compliance with the velocity requirement specified in § 125.84, perform visual inspection of the technologies installed, and assess the need for additional design and construction technologies to minimize entrainment and maximize impingement survival. This section contains monitoring requirements, including how often you must monitor.

(a) *Biological monitoring.* You must monitor both impingement and entrainment of the commercial and recreational fisheries and the forage base species identified in the Source Water Baseline Biological Characterization required by § 125.86(a). The monitoring methods used must be consistent with those used for the Source Water Baseline Biological Characterization required under § 125.86(a). You must follow the monitoring frequencies identified below for at least two (2) years after the initial permit issuance. After that time, the Director may approve a request for less frequent sampling in the remaining years of the permit term and when the permit is reissued, if supporting data show that less frequent monitoring would still allow for the detection of any seasonal and daily variations in the species and numbers of individuals that are impinged or entrained.

(1) *Impingement.* You must collect samples to monitor impingement rates for each species over a 24-hour period and no less than once per month.

(2) *Entrainment.* You must collect samples to monitor entrainment rates for each species over a 24-hour period and no less than biweekly during the primary period of reproduction, larval recruitment, and peak meroplankton abundance identified during the Source Water Baseline Biological Characterization required by § 125.86(a).

(b) *Velocity monitoring.* If your facility uses intake screen systems, you must monitor head loss across the screens and correlate the measured value with the design intake velocity. The head loss across the intake screen must be measured at the minimum ambient source water surface elevation and maximum head loss for each cooling water intake structure. If your facility uses devices other than intake screens, you must monitor velocity at the point of entry through the device. You must monitor head loss or velocity during initial facility startup, and thereafter, at the frequency specified in your NPDES permit, but no less than once per quarter.

(c) *Visual inspections.* You must conduct visual inspections at least weekly to ensure that any additional design and construction technologies implemented under the plan required by § 125.86(b)(6), and other technologies to minimize entrainment and maximize impingement survival are maintained and operated so as to ensure that they will continue to function as designed.

§ 125.88 As an owner or operator of a new facility, must I keep records and report?

As an owner or operator of a new facility you are required to keep records and to report information and data to the Director as follows:

(a) You must keep records of all the data used to complete the permit application and show compliance with the requirements, any supplemental information developed under § 125.86, and any compliance monitoring data submitted under § 125.87, for a period of at least three (3) years from the date of permit issuance. The Director may require that these records be kept for a longer period.

(b) You must provide the following to the Director in a yearly status report:

(1) Biological monitoring records for each cooling water intake structure as required by § 125.87(a);

(2) Velocity and head loss monitoring records for each cooling water intake structure as required by § 125.87(b); and

(3) Records of visual inspections as required in § 125.87(c).

§ 125.89 As the Director, what must I do to comply with the requirements of this subpart?

(a) *Sampling plan for source water baseline biological characterization.* As the Director, you must review and approve, approve with comments, or disapprove, the sampling plan required by § 125.86(a)(2)(i) within 90 days.

(b) *Permit application.* As the Director, you must review materials submitted by the applicant under § 125.86(b) at the time of the initial permit application and before each permit renewal or reissuance to determine whether there have been any changes in facility operations or physical and biological attributes of the source water body. You must evaluate any changes to determine the need for additional or more stringent conditions in the permit.

(c) *Permitting requirements.* Section 316(b) requirements are imposed on facilities through NPDES permits. As the Director, you must determine, based on the information submitted by the new facility in its permit application, the appropriate requirements and conditions to include in the permit based on the location of the cooling water intake structure and the water body type. You must also review and approve, approve with comments, or disapprove any plan submitted under § 125.86(a) or (b)(6). The following requirements must be included in each permit:

(1) *Cooling water intake structure requirements.* At a minimum, the permit conditions must include conditions that implement the requirements of § 125.84. In addition, you must consider whether more stringent conditions are reasonably necessary in accordance with § 125.84(f) and (g).

(2) *Monitoring conditions.* At a minimum, the permit must require the permittee to perform the monitoring required by § 125.87. You may modify the monitoring program when the permit is reissued and during the term of the permit based on changes in physical or biological conditions in the vicinity of the cooling water intake structure.

(3) *Recordkeeping and reporting.* At a minimum, the permit must require the permittee to report and keep records as required by § 128.88.

3. Revise the subpart heading for subpart J to read as follows:

Subpart J—Criteria and Standards Applicable to Cooling Water Intake Structures for Existing Facilities Under Section 316(b) of the Act—[Reserved]

[FR Doc. 00–19373 Filed 8–9–00; 8:45 am]
BILLING CODE 6560–50–P

Federal Register

Thursday,
August 10, 2000

Part III

Department of Education

34 CFR Parts 682 and 685

Federal Family Education Loan Program and William D. Ford Federal Direct Loan Program; Proposed Rule

DEPARTMENT OF EDUCATION

34 CFR Parts 682 and 685

RIN 1845–AA11

Federal Family Education Loan Program and William D. Ford Federal Direct Loan Program

AGENCY: Office of Postsecondary Education, Department of Education.

ACTION: Notice of proposed rulemaking.

SUMMARY: The Secretary proposes to amend the Federal Family Education Loan (FFEL) Program and the William D. Ford Federal Direct Loan (Direct Loan) Program regulations. These proposed regulations are needed to implement changes made to the Higher Education Act of 1965, as amended, (HEA) by the Higher Education Amendments of 1998 (1998 Amendments). The proposed regulations are necessary to implement the teacher loan forgiveness programs in the FFEL and Direct Loan programs that were included in the 1998 Amendments. In addition, these proposed regulations contain conforming changes for both the FFEL Program and the Direct Loan Program, as well as technical amendments to the Direct Loan Program regulations.

DATES: We must receive your comments on or before September 25, 2000.

ADDRESSES: Address all comments concerning these proposed regulations to Ms. Beth Grebeldinger and Mr. Don Watson, U.S. Department of Education, PO Box 23272, Washington, DC 20026–3272. If you prefer to send your comments through the Internet, use the following address: TEACHERNPRM@ed.gov

If you want to comment on the information collection requirements, you must send your comments to the Office of Management and Budget at the address listed in the Paperwork Reduction Act section of this preamble. You may also send a copy of these comments to the Department representatives named in this section.

FOR FURTHER INFORMATION CONTACT: For the FFEL Program, Ms. Beth Grebeldinger, or for the Direct Loan Program, Mr. Don Watson, U.S. Department of Education, 400 Maryland Avenue, SW., Room 3045, Regional Office Building #3, Washington, DC 20202–5346. Telephone: (202) 708–8242. If you use a telecommunications device for the deaf (TDD), you may call the Federal Information Relay Service (FIRS) at 1–800–877–8339.

Individuals with disabilities may obtain this document in an alternate format (*e.g.,* Braille, large print, audiotape, or computer diskette) on request to one of the contact persons listed in the preceding paragraph.

SUPPLEMENTARY INFORMATION:

Invitation To Comment

We invite you to submit comments regarding these proposed regulations. To ensure that your comments have maximum effect in developing the final regulations, we urge you to identify clearly the specific section or sections of the proposed regulations that each of your comments addresses and to arrange your comments in the same order as the proposed regulations.

We invite you to assist us in complying with the specific requirements of Executive Order 12866 and its overall requirement of reducing regulatory burden that might result from these proposed regulations. Please let us know of any further opportunities we should take to reduce potential costs or increase potential benefits while preserving the effective and efficient administration of the program.

During and after the comment period, you may inspect all public comments about these proposed regulations in Room 3045, Regional Office Building #3, 7th and D Streets, SW., Washington, DC, between the hours of 8:30 a.m. and 4 p.m., Eastern time, Monday through Friday of each week except Federal holidays.

Assistance to Individuals With Disabilities in Reviewing the Rulemaking Record

On request, we will supply an appropriate aid, such as a reader or print magnifier, to an individual with a disability who needs assistance to review the comments or other documents in the public rulemaking record for these proposed regulations. If you want to schedule an appointment for this type of aid, you may call (202) 205–8113 or (202) 260–9895. If you use a TDD, you may call the Federal Information Relay Service at 1–800–877–8339.

Negotiated Rulemaking

Section 492 of the HEA requires that, before publishing any proposed regulations for programs under Title IV of the HEA, the Secretary obtain public involvement in the development of the proposed regulations. After obtaining advice and recommendations, the Secretary must conduct a negotiated rulemaking process to develop the proposed regulations. All published proposed regulations must conform to agreements resulting from the negotiated rulemaking process unless the Secretary reopens the negotiated rulemaking process or provides a written explanation to the participants in that process why the Secretary has decided to depart from the agreements.

To obtain public involvement in the development of the proposed regulations, we held listening sessions in Washington, DC, Atlanta, Chicago, and San Francisco. Four half-day sessions were held on September 13 and 14, 1999, in Washington, DC. In addition, we held three regional sessions in Atlanta on September 17, in Chicago on September 24, and in San Francisco on September 27, 1999. The Office of Student Financial Assistance's Customer Service Task Force also conducted listening sessions to obtain public involvement in the development of our regulations.

We then published a notice in the **Federal Register** (64 FR 73458, December 30, 1999) to announce our intention to establish two negotiated rulemaking committees to draft proposed regulations affecting Title IV of the HEA. The notice requested nominations for participants from anyone who believed that his or her organization or group should participate in this negotiated rulemaking process. The notice announced that we would select participants for the process from the nominees of those organizations or groups. The notice also announced a tentative list of issues that each committee would negotiate.

Once the two committees were established, they met to develop proposed regulations over the course of several months, beginning in February. The proposed regulations contained in this NPRM reflect the final consensus of Negotiating Committee I (committee), which was made up of the following members:

American Association of Collegiate Registrars and Admission Officers
American Association of Cosmetology Schools
American Association of State Colleges and Universities (in coalition with American Association of Community Colleges)
American Council on Education
Career College Association
Coalition of Higher Education Assistance Organizations
Consumer Bankers Association
Education Finance Council
Education Loan Management Resources
Legal Services
National Association of College and University Business Officers
National Association of Independent Colleges and Universities
National Association of State Universities and Land-Grant Colleges

National Association of Student Financial Aid Administrators
National Association of Student Loan Administrators
National Council of Higher Education Loan Programs
National Direct Student Loan Coalition
Sallie Mae, Inc.
Student Loan Servicing Alliance
The College Fund/United Negro College Fund
United States Department of Education
United States Student Association
United States Public Interest Research Group

As stated in the committee protocols, consensus means that there must be no dissent by any member in order for the committee to be considered to have reached agreement. Consensus was reached on all of the proposed regulations in this document.

Significant Proposed Regulations

We discuss substantive issues under the sections of the proposed regulations to which they pertain. Generally, we do not address proposed regulatory provisions that are technical or otherwise minor in effect.

Teacher Loan Forgiveness Program

Statute: The 1998 Amendments create teacher loan forgiveness programs for borrowers in the FFEL and Direct Loan programs. The loan forgiveness programs are intended to encourage individuals to enter and continue teaching in elementary and secondary schools in areas designated as low income.

Current Regulations: Regulations for these programs do not exist because these loan forgiveness programs were created by the 1998 Amendments.

Proposed Regulations: General

The proposed regulations would implement new sections 428J and 460 of the HEA that created teacher loan forgiveness programs under the FFEL and Direct Loan programs. Under these provisions, certain new borrowers in the FFEL and Direct Loan programs may have up to $5,000 of their loans forgiven after teaching for five consecutive, complete academic years in low-income schools that meet specified criteria. The proposed regulations define a new borrower, for purposes of the loan forgiveness programs, as someone who has no outstanding loan balance under the Federal Family Education Loan (FFEL) Program or the William D. Ford Federal Direct Loan (Direct Loan) Program on October 1, 1998 or who has no outstanding loan balance on the date he or she obtains a loan after October 1, 1998. October 1, 1998 was the effective date of the teacher loan forgiveness provision. The HEA authorizes the forgiveness of up to a total of $5,000 in Federal Stafford subsidized and unsubsidized loans, Direct Subsidized Loans, and Direct Unsubsidized Loans. In addition, Consolidation loans under the FFEL and Direct Loan programs may be forgiven under certain conditions. Loan forgiveness under these programs is not available for amounts borrowed under the Federal PLUS and Direct PLUS loan programs.

Under the proposed regulations, to qualify for loan forgiveness, the borrower must have been employed as a full-time teacher for five consecutive complete academic years, at least one of which was after the 1997–1998 academic year. Under certain conditions a borrower, who is in the process of completing his or her five consecutive years of teaching, may request and will receive a forbearance in anticipation of receiving loan forgiveness.

Reasons: These regulations are needed to implement the new teacher loan forgiveness programs and to inform the public, students, loan holders, and institutions of the teacher loan forgiveness programs and their requirements. The terms of the programs and requirements are fully discussed in the following sections of the proposed regulations.

Sections 682.211(h)(2) and (3), 682.215(e), and 685.205(a)(5) Forbearance

Proposed Regulations: The proposed regulations allow some borrowers to request a forbearance while awaiting loan forgiveness. Generally, during a forbearance, the borrower is not required to make payments and interest continues to accrue. Any unpaid interest that accrues on an FFEL loan during forbearance will be added to the principal (capitalized) in accordance with section 682.202(b). In the Direct Loan program any unpaid interest that accrues will be capitalized at the end of the forbearance.

These proposed regulations would allow borrowers to request a forbearance while performing qualifying teaching service. The proposed regulations require a loan holder to grant an annual forbearance to a borrower if the loan holder determines that the expected cancellation will satisfy the anticipated remaining outstanding balance on the loan at the end of the period of qualified teaching and if the borrower provides the loan holder with a statement certifying his or her intent to satisfy the five-year teaching requirement. Forbearance may be granted for a full 12 month period, even if the teaching service is less than 12 months.

These proposed regulations also allow borrowers who qualify for teacher loan forgiveness to receive forbearance on their qualifying FFEL loans or Direct Loans during the submission and processing of their applications for teacher loan forgiveness.

Reasons: During negotiations, some non-federal negotiators suggested that some borrowers who were required to continue making payments on their loans during the five-year teaching requirement might actually pay their way out of the cancellation benefit since the statute prohibits the refunding of payments made prior to the cancellation. We agree that this would not be an appropriate result and have proposed that the borrower would be permitted to request forbearance each year during the five-year teaching period. Under this proposal, the borrower must request the annual forbearance and the loan holder must grant it if the loan holder believes that the cancellation will eliminate the borrower's remaining loan balance. This forbearance applies only to borrowers whose anticipated loan balance, with the forbearance, at the end of the five-year period of qualifying teaching will be $5,000 or less. We would also encourage loan holders to offer a borrower who has a higher loan balance any deferments or forbearances for which the borrower may qualify.

The committee also decided that borrowers who qualify for teacher loan forgiveness should be able to receive a forbearance during the period needed for submission and processing of their applications for the loan forgiveness. This would be consistent with the processing of similar applications for relief such as closed school and false certification.

Sections 682.215(b) and 685.217(b) Definitions

Proposed Regulations: The proposed regulations provide specific definitions for the terms ''academic year'', ''elementary schools'', ''full-time'', ''secondary schools'', and ''teacher''. Of particular interest during negotiated rulemaking were the proposed definitions of ''academic year'' and ''teacher''. These proposed definitions define an ''academic year'' specifically for purposes of the teacher loan forgiveness programs and address issues related to borrowers who teach at more than one school during a year, or for two consecutive halves of two school years. The negotiators agreed to specifically include Special Education teachers in the proposed definition for ''teacher''.

Reasons: Most of the definitions used in the proposed teacher loan forgiveness program regulations are the same or similar to definitions used in the Federal Perkins Loan Program's teacher forgiveness program. Use of these definitions was requested by some of the non-federal negotiators so that there would be consistency of terms for loan forgiveness throughout the various Title IV federal student loan programs.

Several non-federal negotiators objected to our proposed definition of an ''academic year''. These negotiators saw it as an attempt by the Secretary to regulate in an area that should be left to local school authorities. While we do not intend to regulate a school's academic calendar, we believe that clarity in this area is needed to ensure equal treatment of all borrowers in the teacher loan forgiveness programs. The committee ultimately reached consensus on these proposed regulations that include in the definition of an academic year a requirement that nine months would be considered an academic year for a borrower who teaches in a year-round program of instruction.

Sections 682.215(c) and 685.217(c) Borrower Eligibility

Statute: Sections 428J(b)&(g) and 460(b)&(g) of the HEA specify the requirements for borrowers to qualify for teacher loan forgiveness.

Proposed Regulations: The proposed regulations provide that the new borrower must have been employed full-time for five consecutive complete years in a low-income elementary or secondary school that has been listed in a designated Department directory. Consistent with the statute, those low-income elementary or secondary schools are ones that are in a school district that qualifies for funds under title I of the Elementary and Secondary Education Act and have more than 30 percent of their total enrollment made up of children who qualify for services provided under title I.

The proposed regulations also reflect the statute and provide that if the school at which the borrower is employed meets the requirements of a low-income school at the outset of the borrower's qualifying teaching service at that school, then subsequent years of qualified teaching at that school count, even if the school loses its low-income status.

The proposed regulations also provide that the borrower must have been employed as a full-time teacher for five consecutive complete academic years, at least one of which was after the 1997–1998 academic year.

The proposed regulations also reflect the statutory requirements that elementary school teachers must demonstrate teaching skills in certain areas and that secondary school teachers teach in areas that are relevant to their academic major.

The proposed regulations describe certain conditions that would not constitute a break in the required five consecutive complete years of qualified teaching. These circumstances include a return to postsecondary education that is directly related to the qualifying teaching service, a condition covered under the Family and Medical Leave Act of 1993, or a call or order to active duty status for a member of a reserve component of the Armed Forces.

In addition, the proposed regulations permit a borrower to meet the required five-year qualified teaching service requirement if the borrower teaches at more than one qualifying school during an academic year.

The proposed regulations also reflect the statutory limitations that provide that a defaulted loan may not be forgiven under these programs. A defaulted loan on which satisfactory repayment arrangements have been made is eligible for forgiveness. However the proposed regulations do not prohibit borrowers with defaulted loans from receiving the benefits of the teacher loan forgiveness on any of their non-defaulted loans.

They also reflect the statutory provision that a borrower may not use the same qualifying teaching service to obtain benefits under the FFEL and Direct Loan forgiveness programs and a benefit for service the AmeriCorp program operated by the Corporation for National Service.

Reasons: During the negotiations, we originally proposed that the first year of qualifying teaching service begin with or after the 1998–1999 academic year. We believed that this approach was most consistent with the purpose of the law which is to encourage individuals to ''enter and continue'' in the teaching profession. Since the loan forgiveness provision was enacted into law during the 1998–1999 academic year, we concluded that loan forgiveness would not have been an incentive to enter the teaching profession for borrowers who were teaching prior to that date. Additionally, we were concerned that the legislative history, including the cost estimate for the program, could indicate that Congress intended for 1998–1999 to be the first academic year of any qualified teaching.

Some non-federal negotiators, however, argued that the qualifying teaching service should include periods before the 1998–1999 academic year. These negotiators argued that the purpose of the law is not only to encourage borrowers to enter the teaching profession, but also to encourage other borrowers, who were already teaching in low-income schools, to continue doing so. They also noted that although the law provides that the teacher must be a new borrower on or after October 1, 1998 and that there must be five consecutive complete years of teaching, the law does not specifically state when the five years of teaching must begin.

Based on the arguments put forward by the non-federal negotiators, we agreed to propose loan forgiveness for qualified borrowers who have been employed as full-time teachers for five consecutive complete academic years as long as one of the years is after the 1997–1998 academic year.

The provisions included in the proposed regulations related to the specific teaching preparation and abilities of the elementary or secondary teacher reflect the language in sections 428J(b)(1)(B)&(C) and 460(b)(1)(A)(ii)&(iii) of the HEA.

The draft regulations include three exemptions that prevent certain specified periods during which the borrower does not teach from breaking the five consecutive years needed to qualify for the loan forgiveness. The negotiators determined that these specific breaks in teaching should not disrupt the borrower's otherwise consecutive complete pattern of service. Two of these exceptions were adopted by the committee in recognition of the fact that these circumstances are outside of the borrower's control and do not reflect a choice by the borrower to leave qualified teaching. These particular circumstances are a condition covered under the Family and Medical Leave Act of 1993, or a call or order to active duty status for a member of a reserve component of the Armed Forces. The third exemption is the borrower's return to postsecondary education that is directly related to the qualifying teaching service. This exception was included to directly support one of the fundamental purposes of the teacher loan forgiveness provision—to encourage teachers to continue teaching.

These proposed regulations would also allow a borrower to teach at more than one qualified school and meet the requirement for full-time teaching. This provision was requested by many of the non-federal negotiators and mirrors a provision in the Federal Perkins Loan Program.

Sections 682.215(d) and 685.217(d) Forgiveness Amount

Statute: Sections 428J(c) and 460(c)(1) include specific provisions governing the amount of loans that may be forgiven and specify which loans are eligible for forgiveness.

Proposed Regulations: These proposed regulations reflect the statute and provide that $5,000 is the maximum amount that may be forgiven for an individual teacher under these programs. The $5,000 includes principal, including any interest that has been capitalized, and any accrued interest outstanding at the time of forgiveness. These proposed regulations also reflect the statutory provisions which allow certain portions of consolidation loans to be forgiven and that prohibit any refund of payments that the borrower may have made toward a qualifying loan. Finally, they make clear that the $5,000 maximum loan forgiveness amount applies to all of a borrower's qualifying loans including loans under both the FFEL and Direct Loan programs.

Reasons: These proposed regulations reflect the requirements of the statute.

Sections 682.215(f) and 685.217(e) Application and Processing

Proposed Regulations: These provisions explain the application process for both the borrower and the lender or holder. They include the steps the holder must take to inform the borrower of the status of a forgiveness application and, in the case of the FFEL Program, the steps that the holder and guaranty agency must take for coordination of payment of the forgiveness amount.

On the application, borrowers will be required to certify whether or not they have another pending application for teacher loan forgiveness under either the FFEL Program or the Direct Loan Program. If they have applied for loan forgiveness in both programs, the proposed regulations clarify that the total combined loan forgiveness amount cannot exceed $5,000.

Reasons: The proposed regulations for teacher loan forgiveness are generally consistent in both the FFEL and the Direct Loan programs. The negotiators agreed that having consistent rules in both programs would help to ensure consistent administration and fair treatment for all borrowers. Accordingly, all borrowers will be required to submit a completed application for teacher loan forgiveness.

A borrower must provide the certification concerning multiple applications to ensure that the borrower is not receiving benefits for which he or she is not eligible to receive under the HEA.

Executive Order 12866:

1. Potential Costs and Benefits

Under Executive Order 12866, we have assessed the potential costs and benefits of this regulatory action.

The potential costs associated with the proposed regulations are those resulting from statutory requirements and those we have determined as necessary for administering these programs effectively and efficiently.

These proposed regulations implement a program under which borrowers who serve for five consecutive, complete, school years as teachers in certain high-poverty schools qualify for up to $5,000 in loan forgiveness benefits. In assessing the potential costs and benefits—both quantitative and qualitative—of this regulatory action, we have determined that the benefits would justify the costs.

2. Clarity of the Regulations

Executive Order 12866 and the President's Memorandum of June 1, 1998 on ''Plain Language in Government Writing'' require each agency to write regulations that are easy to understand.

The Secretary invites comments on how to make these proposed regulations easier to understand, including answers to questions such as the following:

- Are the requirements in the proposed regulations clearly stated?
- Do the proposed regulations contain technical terms or other wording that interferes with their clarity?
- Does the format of the proposed regulations (grouping and order of sections, use of headings, paragraphing, etc.) aid or reduce their clarity?
- Would the proposed regulations be easier to understand if we divided them into more (but shorter) sections? (A ''section'' is preceded by the symbol ''§ '' and a numbered heading; for example, *§ 685.217(d) Forgiveness Amount.*)
- Could the description of the proposed regulations in the **SUPPLEMENTARY INFORMATION** section of this preamble be more helpful in making the proposed regulations easier to understand? If so, how?
- What else could we do to make the proposed regulations easier to understand?

Send any comments that concern how the Department could make these proposed regulations easier to understand to the person listed in the **ADDRESSES** section of the preamble.

Regulatory Flexibility Act Certification

The Secretary certifies that these proposed regulations would not have a significant economic impact on a substantial number of small entities. These proposed regulations would affect individual FFEL and Direct Loan borrowers, who are not considered ''small entities'' under the Regulatory Flexibility Act.

The Secretary invites comments on this determination, and welcomes proposals on any significant alternatives that would satisfy the same legal and policy objectives of these proposals while minimizing the economic impact on small entities.

Paperwork Reduction Act of 1995

Sections 682.211 and 682.215(c) in FFEL Program and §§ 685.205 and 685.217 in Direct Loans contain an information collection requirement. Under the Paperwork Reduction Act of 1995 (44 U.S.C. 3507(d)), the Department of Education has submitted a copy of these sections to the Office of Management and Budget (OMB) for its review.

Collection of Information: Federal Family Education Loan Program and William D. Ford Federal Direct Loan Program.

Section 682.211 Forbearance

This proposed provision would allow a borrower who is a teacher to receive a forbearance during the period in which the borrower is completing the teaching requirements for teacher loan forgiveness. This provision has information collection requirements that would affect borrowers. Borrowers will be required to complete a form certifying their eligibility for the forbearance and agreeing to the terms of the forbearance. We will develop a form following publication of the final regulations and, when cleared, the form will account for the burden to the borrowers.

Section 682.215 Teacher Loan Forgiveness

This proposed provision would allow a borrower who is a teacher and who meets certain requirements to have up to $5,000 of his or her loan debt forgiven. This provision has information collection requirements that would affect borrowers and lenders. The burden for lenders is currently included in our current inventory based on the prior teaching loan forgiveness program. Borrowers will be required to complete a form to apply for teacher loan forgiveness. This form will be developed following publication of the

final regulations and, when cleared, will account for the burden to the borrowers.

Section 685.205 Forbearance

This proposed provision would allow a borrower who is a teacher to receive a forbearance during the period in which the borrower is completing the teaching requirements for teacher loan forgiveness. This provision has information collection requirements that would affect borrowers. Borrowers will be required to complete a form certifying their eligibility for the forbearance and agreeing to the terms of the forbearance. We will modify our current *General Forbearance Request* form (OMB No. 1845–0031) following publication of the final regulations and, when cleared, the form will account for the burden to the borrowers.

Section 685.217 Teacher Loan Forgiveness

This proposed provision would allow a borrower who is a teacher and who meets certain requirements to have up to $5,000 of his or her loan debt forgiven. This provision has information collection requirements that would affect borrowers. Borrowers will be required to complete a form to apply for teacher loan forgiveness. This form will be developed following publication of the final regulations and, when cleared, will account for the burden to the borrowers.

If you want to comment on the information collection requirements, please send your comments to the Office of Information and Regulatory Affairs, OMB room 10235, New Executive Office Building, Washington, DC 20503; Attention: Desk Officer for U.S. Department of Education. You may also send a copy of these comments to the Department representative named in the **ADDRESSES** section of this preamble.

We consider your comments on these proposed collections of information in—

- Deciding whether the proposed collections are necessary for the proper performance of our functions, including whether the information will have practical use;
- Evaluating the accuracy of our estimate of the burden of the proposed collections, including the validity of our methodology and assumptions;
- Enhancing the quality, usefulness, and clarity of the information we collect; and
- Minimizing the burden on those who must respond. This includes exploring the use of appropriate automated, electronic, mechanical, or other technological collection techniques or other forms of information technology; *e.g.,* permitting electronic submission of responses.

OMB is required to make a decision concerning the collections of information contained in these proposed regulations between 30 and 60 days after publication of this document in the **Federal Register**. Therefore, to ensure that OMB gives your comments full consideration, it is important that OMB receives the comments within 30 days of publication. This does not affect the deadline for your comments to us on the proposed regulations.

Intergovernmental Review

These programs are not subject to Executive Order 12372 and the regulations in 34 CFR 79.

Assessment of Educational Impact

The Secretary particularly requests comments on whether these proposed regulations would require transmission of information that any other agency or authority of the United States gathers or makes available.

Electronic Access to This Document

You may view this document in text or Adobe Portable Document Format (PDF) on the Internet at the following sites:

http://ocfo.ed.gov/fedreg.htm

http://ifap.ed.gov/csb_html/fedlreg.htm

To use the PDF you must have the Adobe Acrobat Reader Program with Search, which is available free at the first of the previous sites. If you have questions about using the PDF, call the U.S. Government Printing Office (GPO), toll free, at 1–888–293–6498; or in the Washington, D.C., area at (202) 512–1530.

Note: The official version of this document is the document published in the **Federal Register**. Free Internet access to the official edition of the **Federal Register** and the Code of Federal Regulations is available on GPO Access at: http://www.access.gpo.gov/nara/index.html.

(Catalog of Federal Domestic Assistance Numbers 84.032 Federal Family Education Loan Program, and 84.268 William D. Ford Federal Direct Loan Program)

List of Subjects in 34 CFR Parts 682 and 685

Administrative practice and procedure, Colleges and universities, Education, Loan programs-education, Reporting and recordkeeping requirements, Student aid, Vocational education.

Dated: July 27, 2000.

Richard W. Riley,

Secretary of Education.

For the reasons stated in the preamble, the Secretary proposes to amend title 34 of the Code of Federal Regulations by revising parts 682 and 685 as follows:

PART 682—FEDERAL FAMILY EDUCATION LOAN PROGRAM

(1) The authority citation for part 682 continues to read as follows:

Authority: 20 U.S.C. 1071 to 1087–2, unless otherwise noted.

2. Section 682.211 is amended as follows:

A. In paragraph (h)(2)(ii)(B), by removing the period at the end and adding in its place, ''; or''.

B. By adding a new paragraph (h)(2)(ii)(C).

C. By adding a new paragraph (h)(3)(iii).

The additions and revisions read as follows:

§ 682.211 Forbearance.

* * * * *

(h) * * *

(2) * * *

(ii) * * *

(C) Is performing the type of service that would qualify the borrower for loan forgiveness and associated forbearance under the requirements of the Teacher loan forgiveness program in § 682.215.

* * * * *

(3) * * *

(iii) Before granting a forbearance to a borrower under paragraph (h)(2)(ii)(C) of this section, the lender must require the borrower to—

(A) Submit documentation for the period of the annual forbearance request showing the beginning and anticipated ending dates that the borrower is expected to perform, for that year, the type of service described in § 682.215(c); and

(B) Certify the borrower's intent to satisfy the requirements of § 682.215(c).

* * * * *

3. A new § 682.215 is added to read as follows:

§ 682.215 Teacher loan forgiveness program.

(a) *General.* The Teacher loan forgiveness program is intended to encourage individuals to enter and continue in the teaching profession. For new borrowers, the Secretary repays up to $5,000 of subsidized and unsubsidized Federal Stafford Loans, Direct Subsidized Loans, Direct Unsubsidized Loans, and in certain cases, Federal Consolidation Loans or

Direct Consolidation Loans. The forgiveness program is only available to a borrower who has no outstanding loan balance under the Federal Family Education Loan (FFEL) Program or the William D. Ford Federal Direct Loan (Direct Loan) Program on October 1, 1998 or who has no outstanding loan balance on the date he or she obtains a loan after October 1, 1998. In addition, the borrower must have been employed as a full-time teacher for five consecutive complete academic years, at least one of which was after the 1997-1998 academic year, in certain eligible elementary or secondary schools that serve low-income families. The loan for which forgiveness is sought must have been made prior to the end of the borrower's fifth year of qualifying teaching service.

(b) *Definitions.* The following definitions apply to this section:

Academic year means one complete school year at the same school, or two complete and consecutive half years at different schools, or two complete and consecutive half years from different school years at either the same school or different schools. Half years exclude summer sessions and generally fall within a twelve-month period. For schools that have a year-round program of instruction, nine months is considered an academic year.

Elementary school means a public or nonprofit private school that provides elementary education as determined by State law or the Secretary if that school is not in a State.

Full-time means the standard used by a State in defining full-time employment as a teacher. For a borrower teaching in more than one school, the determination of full-time is based on the combination of all qualifying employment.

Secondary school means a public or nonprofit private school that provides secondary education as determined by State law or the Secretary if the school is not in a State.

Teacher means a person who provides direct classroom teaching or classroom-type teaching in a non-classroom setting, including Special Education teachers.

(c) *Borrower eligibility.* (1) A borrower may obtain loan forgiveness under this program if he or she has been employed as a full-time teacher for five consecutive complete academic years, at least one of which was after the 1997–1998 academic year, in an elementary or secondary school that—

(i) Is in a school district that qualifies for funds under title I of the Elementary and Secondary Education Act of 1965, as amended;

(ii) Has been selected by the Secretary based on a determination that more than 30 percent of the school's total enrollment is made up of children who qualify for services provided under title I; and

(iii) Is listed in the *Annual Directory of Designated Low-Income Schools for Teacher Cancellation Benefits.* If this directory is not available before May 1 of any year, the previous year's directory may be used.

(2) If the school at which the borrower is employed meets the requirements specified in paragraph (c)(1) of this section for at least one year of the borrower's five consecutive complete academic years of teaching and the school fails to meet those requirements in subsequent years, those subsequent years of teaching qualify for purposes of this section for that borrower.

(3) A borrower who is employed as an elementary school teacher must demonstrate knowledge and teaching skills in reading, writing, mathematics, and other areas of the elementary school curriculum, as certified by the chief administrative officer of the school in which the borrower was employed.

(4) A borrower who is employed as a secondary school teacher must teach in a subject area that is relevant to the borrower's academic major as certified by the chief administrative officer of the school in which the borrower was employed.

(5) The academic year may be counted as one of the borrower's five consecutive complete academic years if the borrower completes at least one-half of the academic year and the borrower's employer considers the borrower to have fulfilled his or her contract requirements for the academic year for the purposes of salary increases, tenure, and retirement if the borrower is unable to complete an academic year due to—

(i) A return to postsecondary education, on at least a half-time basis, that is directly related to the performance of the service described in this section;

(ii) A condition that is covered under the Family and Medical Leave Act of 1993 (FMLA) (19 U.S.C. 2654); or

(iii) A call or order to active duty status for more than 30 days as a member of a reserve component of the Armed Forces named in section 10101 of title 10, United States Code.

(6) A borrower's period of postsecondary education, qualifying FMLA condition, or military active duty as described in paragraph (c)(5)(i), (ii), and (iii) of this section does not constitute a break in the required five consecutive years of qualifying teaching service.

(7) A borrower who taught in more than one qualified school during an academic year and demonstrates that the combined teaching was the equivalent of full-time, as supported by the certification of one or more of the chief administrative officers of the schools involved, is considered to have completed one academic year of qualified teaching.

(8) A borrower is not eligible for teacher loan forgiveness on a defaulted loan unless the borrower has made satisfactory repayment arrangements to re-establish title IV eligibility, as defined in § 682.200.

(9) A borrower may not receive loan forgiveness for qualifying teaching service under this section if the borrower receives a benefit for the same teaching service under subtitle D of title I of the National and Community Service Act of 1990.

(d) *Forgiveness amount.* (1) A qualified borrower is eligible for forgiveness of up to $5,000 of the aggregate amount of a borrower's subsidized or unsubsidized Federal Stafford or Federal Consolidation Loan obligation that is outstanding after the borrower completes his or her fifth consecutive complete academic year of teaching as described in paragraph (c) of this section. Only the portion of the consolidation loan that was used to repay the outstanding portions of a subsidized or unsubsidized Federal Stafford loan, a Direct Subsidized Loan, or a Direct Unsubsidized Loan qualifies for loan forgiveness under this section.

(2) A borrower may not receive more than a total of $5,000 in loan forgiveness under both this section and under section 34 CFR 685.217.

(3) The holder does not refund payments that were received from a borrower who qualifies for loan forgiveness under this section.

(e) *Authorized forbearance during qualifying teaching service and discharge processing.* (1) At the borrower's request, a lender grants a forbearance—

(i) Under § 682.211(h)(2)(ii)(C) and (h)(3)(iii), in annual increments during each of the five years of qualifying teaching service, if the lender believes that the cancellation amount will satisfy the anticipated remaining outstanding balance on the loan at the time of the expected cancellation;

(ii) For a period not to exceed 60 days while the lender is awaiting a completed teacher loan forgiveness application from the borrower; or

(iii) For the period beginning on the date the lender receives a completed loan forgiveness application to the date the lender receives either a denial of the

request or the loan discharge amount from the guaranty agency, in accordance with paragraph (f) of this section.

(2) At the conclusion of a forbearance authorized under paragraph (e)(1) of this section, the lender must resume collection activities and may capitalize any interest accrued and not paid during the forbearance period in accordance with § 682.202(b).

(3) Nothing in paragraph (e) of this section restricts holders from offering other forbearance options to borrowers who do not meet the requirements of paragraph (e)(1)(i) of this section.

(f) *Application and processing.* (1) A borrower, after completing the qualifying teaching service, requests loan forgiveness from the holder of the loan on a form approved by the Secretary.

(2)(i) The holder must file a request for payment with the guaranty agency on a teacher forgiveness discharge no later than 60 days after the receipt, from the borrower, of a completed teacher loan forgiveness application form including the certification form or forms submitted by the borrower and certified by the appropriate official or officials, as described in paragraph (c)(3) or (c)(4) of this section.

(ii) When filing a request for payment on a teacher forgiveness discharge, the holder must provide the guaranty agency with the completed loan forgiveness application submitted by the borrower and any required supporting documentation.

(3)(i) Within 45 days of receiving the holder's request for payment, the guaranty agency must determine if the borrower meets the eligibility requirements for loan forgiveness under this section and must notify the holder of its determination of the borrower's eligibility for loan forgiveness under this section.

(ii) If the guaranty agency approves the discharge, it must, within the same 45-day period, pay the holder the amount of the discharge, up to $5,000, subject to paragraphs (c)(9) and (d)(2) of this section.

(4) After being notified by the guaranty agency of its determination of the eligibility of the borrower for the discharge, the holder must, within 30 days, inform the borrower of the determination. If the discharge is approved, the lender must also provide the borrower with information regarding any new repayment terms of remaining loan balances.

(5) Unless otherwise instructed by the borrower, the holder must apply the proceeds of the teacher forgiveness discharge first to any outstanding unsubsidized Federal Stafford loan balances, next to any outstanding subsidized Federal Stafford loan balances, and lastly to any outstanding Federal Consolidation loan balances. (Authority: 20 U.S.C. 1078–10)

PART 685—WILLIAM D. FORD FEDERAL DIRECT LOAN PROGRAM

4. The authority citation for Part 685 continues to read as follows:

Authority: 20 U.S.C. 1087 *et seq.*, unless otherwise noted.

§ 658.102 [Amended]

5. Section 685.102(b) is amended in paragraph (2) of the definition of ''Satisfactory repayment arrangement'' by removing the reference to ''34 CFR 685.215(d)(1)(ii)(E)'' and adding, in its place, ''34 CFR 685.220(d)(1)(ii)(E)''.

§ 658.200 [Amended]

6. Section 685.200 is amended by:

A. Removing from paragraph (a)(1)(v) ''34 CFR 668.7(b)'' and adding, in its place, ''34 CFR 668.32(e)(2) or (3)''.

B. Removing from paragraph (b)(1)(iv) ''34 CFR 668.7'' and adding, in its place ''34 CFR 668.32(g)''.

C. Removing, from paragraph (c), ''§ 685.215(d)(1)(ii)(F)'' and adding, in its place, ''685.220(d)(1)(ii)(F)''.

§ 685.201 [Amended]

7. Section 685.201(c)(2) is amended by removing the reference to ''§ 685.216'' and by adding, in its place ''§ 685.220''.

8. Section 685.205 is amended by:

A. Redesignating paragraph (a)(5) as (a)(6).

B. Adding a new paragraph (a)(5).

C. Removing from paragraph (b)(6)(i) the reference to ''§ 685.213'' and adding, in its place, ''§ 685.214''.

D. Removing from paragraph (b)(6)(ii) the reference to ''§ 685.214'' and adding, in its place, ''§ 685.215''.

E. Removing from paragraph (b)(6)(iii) the reference to ''§ 685.215; or'' and adding, in its place, ''§ 685.216;''.

F. By redesignating paragraph (b)(6)(iv), as paragraph (b)(6)(v).

G. By adding a new paragraph (b)(6)(iv).

The additions read as follows:

§ 685.205 Forbearance.

(a) * * *

(5) The borrower—

(i) Is performing the type of service that would qualify the borrower for loan forgiveness under the requirements of the Teacher loan forgiveness program in § 685.217; and

(ii) Is required, by the Secretary, before a forbearance is granted under § 685.205(a)(5)(i) to—

(A) Submit documentation for the period of the annual forbearance request showing the beginning and ending dates that the borrower is expected to perform, for that year, the type of service described in § 685.217(c); and

(B) Certify the borrower's intent to satisfy the requirements of § 685.217(c).

* * * * *

(b) * * *

(6) * * *

(iv) Under § 685.217; or

* * * * *

§ 685.210 [Amended]

9. Section 685.210(b)(2)(ii) is amended by removing the reference to ''§ 685.209(d)(2)'' and by adding, in its place ''§ 685.209(c)(4)''.

§ 685.211 [Amended]

10. Section 685.211(e)(4) is amended by removing the reference to ''§ 685.215'' and by adding, in its place, ''§ 685.220''.

§ 685.212 [Amended]

11. Section 685.212 is amended by:

A. Removing from paragraph (d) the reference to ''§ 685.213'' and adding, in its place, ''§ 685.214''.

B. Removing from paragraph (e) the reference to ''§ 685.214'' and adding, in its place, ''§ 685.215''.

C. Removing from paragraph (f) the reference to ''§ 685.215'' and adding, in its place, ''§ 685.216''.

D. By adding a new paragraph (h).

The addition reads as follows:

§ 685.212 Discharge of a loan obligation.

* * * * *

(h) *Teacher loan forgiveness program.* If a new borrower meets the requirements in § 685.217, the Secretary repays up to $5,000 of the borrower's Direct Subsidized Loans, Direct Unsubsidized Loans, and, in certain cases, Direct Consolidation Loans.

* * * * *

§ 685.215 [Amended]

12. In § 685.215, paragraph (c)(5)(ii) is amended by removing the references to ''§ 685.213(d)'' and ''§ 685.213(e)'' and adding, in their place, ''§ 685.214(d)'' and ''§ 685.214(e)'', respectively.

§ 685.216 [Amended]

13. In § 685.216, paragraph (c)(1)(iii)(B) is amended by removing the references to ''§ 685.213(d)'' and ''§ 685.213(e)'' and adding, in their place, ''§ 685.214(d)'' and ''§ 685.214(e)'', respectively.

14. A new § 685.217 is added to read as follows:

§ 685.217 Teacher loan forgiveness program.

(a) *General.* The Teacher loan forgiveness program is intended to

encourage individuals to enter and continue in the teaching profession. For new borrowers, the Secretary will repay up to $5,000 of subsidized and unsubsidized Federal Stafford Loans, Direct Subsidized Loans, Direct Unsubsidized Loans, and, in certain cases, Federal Consolidation Loans or Direct Consolidation Loans. The forgiveness program is only available to a borrower who has no outstanding loan balance under the Federal Family Education Loan (FFEL) Program or the William D. Ford Federal Direct Loan (Direct Loan) Program on October 1, 1998 or who has no outstanding loan balance on the date he or she obtains a loan after October 1, 1998. In addition, the borrower must have been employed as a full-time teacher for five consecutive complete academic years, at least one of which was after the 1997–1998 academic year in certain eligible elementary or secondary schools that serve low-income families. The loan for which the borrower is seeking forgiveness must have been made prior to the end of the fifth year of qualifying teaching service.

(b) *Definitions.* The following definitions apply to this section:

Academic year means one complete school year at the same school, or two complete and consecutive half years at different schools, or two complete and consecutive half years from different school years at either the same school or different schools. Half years exclude summer sessions and generally fall within a twelve-month period. For schools that have a year-round program of instruction, a minimum of nine months is considered an academic year.

Elementary school means a public or nonprofit private school that provides elementary education as determined by State law or the Secretary if that school is not in a State.

Full-time means the standard used by a State in defining full-time employment as a teacher. For a borrower teaching in more than one school, the determination of full-time is based on the combination of all qualifying employment.

Secondary school means a public or nonprofit private school that provides secondary education as determined by State law or the Secretary if the school is not in a State.

Teacher means a person who provides direct classroom teaching or classroom-type teaching in a non-classroom setting, including Special Education teachers.

(c) *Borrower eligibility.* (1) A borrower may obtain loan forgiveness under this program if he or she has been employed as a full-time teacher for five consecutive complete academic years, at least one of which was after the 1997–1998 academic year, in an elementary or secondary school that—

(i) Is in a school district that qualifies for funds under title I of the Elementary and Secondary Education Act of 1965, as amended;

(ii) Has been selected by the Secretary based on a determination that more than 30 percent of the school's total enrollment is made up of children who qualify for services provided under title I; or

(iii) Is listed in the *Annual Directory of Designated Low-Income Schools for Teacher Cancellation Benefits.* If this directory is not available before May 1 of any year, the previous year's directory may be used.

(2) If the school at which the borrower is employed meets the requirements specified in paragraph (c)(1) of this section for at least one year of the borrower's five consecutive complete academic years of teaching and the school failed to meet those requirements in subsequent years, those subsequent years of teaching qualify for purposes of this section for that borrower.

(3) A borrower who is employed as an elementary school teacher must demonstrate knowledge and teaching skills in reading, writing, mathematics, and other areas of the elementary school curriculum, as certified by the chief administrative officer of the school in which the borrower was employed.

(4) A borrower who is employed as a secondary school teacher must teach in a subject area that is relevant to the borrower's academic major as certified by the chief administrative officer of the school in which the borrower was employed.

(5) The academic year may be counted as one of the borrower's five consecutive complete academic years if the borrower completes at least one-half of the academic year and the borrower's employer considers the borrower to have fulfilled his or her contract requirements for the academic year for the purposes of salary increases, tenure, and retirement if the borrower is unable to complete an academic year due to—

(i) A return to postsecondary education, on at least a half-time basis, that is directly related to the performance of the service described in this section;

(ii) A condition that is covered under the Family and Medical Leave Act of 1993 (FMLA) (19 U.S.C. 2654); or

(iii) A call or order to active duty status for more than 30 days as a member of a reserve component of the Armed Forces named in section 10101 of title 10, United States Code.

(6) If a borrower meets the requirements of paragraph (c)(5) of this section, the borrower's period of postsecondary education, active duty, or qualifying FMLA condition does not constitute a break in the required five consecutive years of qualifying teaching service.

(7) A borrower who teaches in more than one qualified school during an academic year and demonstrates that the combined teaching was the equivalent of full-time, as supported by the certification of one or more of the chief administrative officers of the schools involved, is considered to have completed one academic year of qualified teaching.

(8) A borrower is not eligible for teacher loan forgiveness on a defaulted loan unless the borrower has made satisfactory repayment arrangements to re-establish title IV eligibility, as defined in § 685.200(b).

(9) A borrower may not receive loan forgiveness for qualifying teaching service under this section if the borrower receives a benefit for the same teaching service under subtitle D of title I of the National and Community Service Act of 1990.

(d) *Forgiveness amount.* (1) A qualified borrower is eligible for forgiveness of up to $5,000 of the aggregate amount of a borrower's Direct Subsidized Loan, Direct Unsubsidized Loan, or Direct Consolidation Loan obligation that is outstanding after the borrower completes his or her fifth consecutive complete academic year of teaching as described in paragraph (c) of this section. Only the portion of a Direct Consolidation Loan that was used to repay the outstanding portion of a subsidized or unsubsidized Federal Stafford loan, a Direct Subsidized Loan, or a Direct Unsubsidized Loan qualifies for loan forgiveness under this section.

(2) A borrower may not receive more than a total of $5,000 in loan forgiveness under both this section and 34 CFR 682.215.

(3) The Secretary does not refund payments that were received from a borrower who qualifies for loan forgiveness under this section.

(e) *Application.* (1) A borrower, after completing the qualifying teacher service, must request loan forgiveness from the Secretary on a form provided by the Secretary.

(2) If the Secretary determines that the borrower meets the eligibility requirements for loan forgiveness under this section, the Secretary—

(i) Notifies the borrower of this determination; and

(ii) Unless otherwise instructed by the borrower, applies the proceeds of the

loan forgiveness first to any outstanding Direct Unsubsidized Loan balances, next to any outstanding Direct Subsidized Loan balances, any qualifying Direct Unsubsidized Consolidation Loan balances, and last to any qualifying outstanding Direct Subsidized Consolidation Loan balances.

(3) If the Secretary determines that the borrower does not meet the eligibility requirements for loan forgiveness under this section, the Secretary notifies the borrower of this determination.

Authority: 20 U.S.C. 1087a *et seq.*

§ 685.218 [Added and Removed]

§ 685.219 [Added and Removed]

15. New §§ 685.218 and 685.219 are added and reserved.

[FR Doc. 00–20035 Filed 8–9–00; 8:45 am]

BILLING CODE 4000–01–P

Federal Register

Thursday,
August 10, 2000

Part IV

Department of Education

34 CFR Part 600, et al.

Institutional Eligibility; Student Assistance General Provisions; Federal Work-Study Programs; Federal Family Education Loan Program; William D. Ford Federal Direct Loan Program; and the Federal Pell Grant Program; Proposed Rule

DEPARTMENT OF EDUCATION

34 CFR Parts 600, 668, 675, 682, 685, and 690

RIN 1845–AA19

Institutional Eligibility; Student Assistance General Provisions; Federal Work-Study Programs; Federal Family Education Loan Program; William D. Ford Federal Direct Loan Program; and the Federal Pell Grant Program

AGENCY: Office of Postsecondary Education, Department of Education.

ACTION: Notice of proposed rulemaking.

SUMMARY: The Secretary proposes to amend the Institutional Eligibility, the Student Assistance General Provisions, the Federal Work-Study, the William D. Ford Federal Direct Loan, the Federal Family Education Loan, and the Federal Pell Grant regulations. These proposed regulations implement changes negotiated with the financial aid, higher education, and other related community members in the negotiated rulemaking process mandated by Congress under section 492 of the Higher Education Act of 1965, as amended, (HEA). These changes would streamline the application, reapplication and certification processes for institutions that wish to participate in the title IV, HEA programs; reduce burden, under specific circumstances, for the reporting of additional locations; clarify the reporting responsibilities for institutions that experience a change in ownership that results in a change of control; expand the possibilities for institutions to create written agreements with certain other entities to have part or all of their eligible programs provided by those entities; revise the process for determining a transfer student's financial aid history; recognize electronic certification and record retention options for FWS program administration; add flexibility to the training requirements for institutional certification; change loan proceeds disbursement rules for programs using non-standard terms; clarify notification requirements when title IV loan proceeds are credited to a student's institutional account; and add flexibility to lender disbursement requirements and eligibility determinations for students receiving loan proceeds.

DATES: We must receive your comments on or before September 25, 2000.

ADDRESSES: Address all comments about these proposed regulations to: Mark Washington, U.S. Department of Education, P.O. Box 23272, Washington, DC 20026–3272. If you prefer to send your comments through the Internet please use the following address: GPNPRM@ed.gov

You must use the term, ''Team 2—General Provisions'' in the subject line of your electronic mail message.

If you want to comment on the information collection requirements, you must send your comments to the Office of Management and Budget at the address listed in the Paperwork Reduction Act section of this preamble. You may also send a copy of these comments to the Department representative named in this section.

FOR FURTHER INFORMATION CONTACT: Mark Washington, U.S. Department of Education, 400 Maryland Avenue, SW, Room 3045, ROB–3, Washington, DC 20202–5447. Telephone: (202)–260–9321.

If you use a telecommunications device for the deaf (TDD), you may call the Federal Information Relay Service (FIRS) at 1–800–877–8339. Individuals with disabilities may obtain this document in an alternate format (e.g., Braille, large print, audiotape, or computer diskette) on request to the contact person listed above.

SUPPLEMENTARY INFORMATION:

Invitation To Comment

We invite you to submit comments regarding these proposed regulations. To ensure that your comments have maximum effect in developing the final regulations, we urge you to identify clearly the specific section or sections of the proposed regulations that each of your comments addresses, and to arrange your comments in the same order as the proposed regulations.

We invite you to assist us in complying with the specific requirements of Executive Order 12866 and its overall requirement of reducing regulatory burden that might result from these proposed regulations. Please let us know of any further opportunities we should take to reduce potential costs or increase potential benefits while preserving the effective and efficient administration of the programs.

During and after the comment period, you may inspect all public comments about these proposed regulations in Room 3045, Regional Office Building 3, 7th & D Streets, SW, Washington, DC, between the hours of 8:30 a.m. and 4:00 p.m., Eastern time, Monday through Friday of each week except Federal holidays.

Assistance to Individuals With Disabilities in Reviewing the Rulemaking Record

On request, we will supply an appropriate aid, such as a reader or print magnifier, to an individual with a disability who needs assistance to review the comments or other documents in the public rulemaking record for these proposed regulations. If you want to schedule an appointment for this type of aid, you may call (202)–205–8113 or (202)–260–9895. If you use a TDD, you may call the Federal Information Relay Service at 1–800–877–8339.

Negotiated Rulemaking

Section 492 of the HEA requires that, before publishing any proposed regulations to implement programs under title IV of the HEA, the Secretary obtain public involvement in the development of the proposed regulations. After obtaining advice and recommendations, the Secretary must conduct a negotiated rulemaking process to develop the proposed regulations. To the extent that agreements are reached during that process, all published proposed regulations must conform to those agreements unless the Secretary reopens the negotiated rulemaking process or provides a written explanation to the participants in that process outlining the reasons why the Secretary has decided to depart from the agreements.

To obtain public involvement in the development of the proposed regulations, we held listening sessions in Washington, DC, Atlanta, Chicago and San Francisco. Four half-day sessions were held on September 13 and 14, 1999, in Washington, DC. In addition, we held three regional sessions in Atlanta on September 17, in Chicago on September 24, and in San Francisco on September 27, 1999. The Office of Student Financial Assistance's Customer Service Task Force also conducted listening sessions to obtain public involvement in the development of our regulations.

We then published a notice in the **Federal Register** (64 FR 73458, December 30, 1999) to announce our intention to establish two negotiated rulemaking committees to draft proposed regulations affecting title IV of the HEA. The notice requested nominations for participants from anyone who believed that his or her organization or group should participate in this negotiated rulemaking process. The notice announced that we would select participants for the process from the nominees of those organizations or

groups. The notice also announced a tentative list of issues each committee was likely to address.

Once the two committees were established they met to develop proposed regulations over the course of several months, beginning in February.

Committee I—This notice of proposed rulemaking (NPRM) includes two proposed provisions that were discussed as part of negotiated rulemaking by Committee I (Loan Issues). They would make changes to the Federal Family Education Loan (FFEL) Program regulations by providing flexibility to schools and lenders in the disbursement of loan funds. Since the proposed changes would affect both schools and lenders, they have been included in this NPRM. Including these proposed changes in this NPRM will allow all affected parties a better opportunity to review and provide comment on these issues. For a listing of the members of Committee I please see the NPRM published in the **Federal Register** (65 FR 46316) on July 27, 2000 that relates to guaranty agency and other FFEL issues.

As stated in the committee protocols, consensus means that there must be no dissent by any member in order for the committee to be considered to have reached agreement. Consensus was not achieved on the proposed changes that would provide flexibility to schools and lenders in the disbursement of loan funds during the negotiated rulemaking process for Committee I.

A full discussion of these proposed provisions are included in the section of this document titled ''SIGNIFICANT PROPOSED REGULATIONS'' under the discussion of changes to §§ 682.207 and 682.604.

Committee II—Except as noted, the proposed regulations contained in this notice of proposed rulemaking (NPRM) reflect the final consensus of Committee II, which was made up of the following members:

American Association of Collegiate Registrars and Admissions Officers
American Association of Cosmetology Schools
American Association of State Colleges and Universities (in coalition with American Association of Community Colleges)
American Council on Education
Association of Jesuit Colleges and Universities
Career College Association
Coalition of Higher Education Assistance Organizations
Coalition of Publicly Traded Educational Institutions
Consumer Bankers Association
Legal Services
NAFSA: Association of International Educators
National Accrediting Commission of Cosmetology Arts and Sciences, Inc.
National Association of College and University Business Officers
National Association of Independent Colleges and Universities
National Association of Student Financial Aid Administrators
National Association for State Student Grant and Aid Programs
National Association of State Universities and Land-Grant Colleges
National Council of Higher Education Loan Programs
National Direct Student Loan Coalition
Sallie Mae, Inc.
Student Loan Servicing Alliance
The College Fund/United Negro College Fund
United States Department of Education
United States Student Association
United States Public Interest Research Group
University Continuing Education Association.

Consensus was reached on all of the proposed regulations in this document that were discussed by Committee II, except for three issues, two of which allow certain exemptions for public institutions. The other addressed incentive compensation related to securing student enrollments.

The first item in Committee II where consensus was not reached is proposed § 600.20(d)(1) which exempts public institutions from the requirement to apply for approval of their additional locations, if those locations are licensed and accredited, and are in the same State as the main campus. The second item where consensus was not reached is in proposed § 600.31(c)(7), which states that we do not consider a change in governance at a public institution to be a change in ownership resulting in a change of control, if the institution remains a public institution after that change in governance. These two issues will be examined more fully in the following section. Since the committee did not reach consensus on these two provisions, any references to them which may be contained within topics where the committee reached agreement do not represent agreement by the non-federal negotiators with the two regulatory provisions where consensus was not reached. Finally, no consensus was reached regarding whether, or to what extent, we should modify the regulations in § 668.14(b)(22) governing incentive compensation payments made by institutions, related to securing student enrollments. Subsequent to the negotiations, we have decided not to propose regulatory changes in this area.

Significant Proposed Regulations

We discuss substantive issues under the sections of the proposed regulations to which they pertain. Generally, we do not address regulatory provisions that are technical or otherwise minor in effect. The following paragraphs are organized by topic, and in some cases divided further into subtopics, with appropriate headings. Statutory provisions that apply to a particular topic may not be restated after the subtopical categories.

Section 600.10(b)—Additional Locations

Statute: Section 498 of the HEA authorizes the Secretary to determine whether an institution meets the qualifications to be designated as an eligible institution for purposes of the programs authorized by the HEA. This section also outlines the procedures the Secretary uses to certify an institution to participate in the title IV, HEA programs.

Current Regulations: As provided in § 600.10(b)(3)(i) and (ii), when a participating institution wishes to add a location that was not previously eligible where it offers fifty percent or more of an eligible program, it must notify us about the new additional location, and may be required to submit an application for eligibility of the new location. We consider such a location to be eligible to participate only as of the date we certify it to participate.

Proposed Regulations: The proposed regulations revise the provisions that currently exist in § 600.10(b)(3)(i) and (ii).

The revisions clarify that an institution's eligibility does not extend to an additional location it establishes after the institution is designated as eligible if that location provides at least 50 percent of an educational program, unless we approve the location under proposed § 600.20(f)(5) or if the institution is not required to report it to us under proposed § 600.20(d).

Reasons: This section clarifies that an institution must apply for approval to have its eligibility extended to additional locations that are not included in its most recent certification if the institution will offer 50% or more of an education program at those locations. Such additional locations are not considered eligible until the Secretary has approved them as eligible or they meet the exemptions provided in proposed § 600.20(d).

Section 600.20—Application Procedures for Establishing, Reestablishing, Maintaining, or Expanding Institutional Eligibility and Certification

Initial Eligibility Application

Statute: Section 498(b) of the HEA states that the Secretary shall prepare a single application for institutions to

request eligibility, and specifies the information that must be collected from applicant institutions.

Current Regulations: Section 600.20 establishes the procedures for an institution to apply for participation in any title IV, HEA program. Initially, the institution must apply to us to be designated as an eligible institution. Additional requirements for certification to participate in the title IV, HEA programs are described in part 668, subpart B. However, the requirements in the regulations related to eligibility and those related to certification, found in § 600.20(a) and § 668.13, respectively do not make clear that (1) determination of eligibility and certification are separate processes, and (2) an institution may apply for both determinations at the same time by using the Department's application for approval to participate.

Proposed Regulations: These proposed regulations set forth the administrative procedures necessary for submitting the eligibility application, as well as obtaining certification for participation in the title IV, HEA programs.

Section 600.20(a), as proposed, also clearly indicates that eligibility and certification are separate distinguishable processes, requiring specific actions for successful completion.

This revision also clarifies that we determine whether an applicant institution meets the participation standards (in part 668, subpart B) and the financial responsibility standards (in part 668, subpart L), of the current regulations, before we certify the institution. As required under current regulations, our internal administrative processes already include these standards, but the proposed regulation clarifies that the review is based upon the regulatory requirements.

Reasons: We are consolidating related provisions for eligibility and certification mandated by the HEA and current regulations. We believe a more uniform construction will make these regulations easier to understand and to implement.

Reapplication Process

Statute: Section 498(g) of the HEA addresses issues regarding the renewal of institutional eligibility. Section 498(i) outlines the requirements that must be met when an institution experiences a change in ownership that results in a change of control.

Eligible But Not Participating Institutions

Current Regulations: Section 600.20(b) provides that all eligible institutions, whether they participate in the title IV HEA programs or not, must reapply if they want to continue their eligibility, and certification to participate if applicable, under conditions specified in the regulation (e.g., adding a new location or change of ownership).

Proposed Regulations: We propose in § 600.20(b)(1) that a currently designated eligible institution that is not participating in the title IV, HEA programs, is only required to apply to us for a determination that it continues to be eligible, if we request the institution to reapply.

Reasons: In discussions regarding the reapplication process, we proposed to continue the current requirement in § 600.20(b) that all institutions would be required to reapply if we so requested. However, we suggested that eligible but non-participating institutions would not need to automatically reapply for any of the current reasons provided in § 600.20. These institutions may qualify to participate in certain non-title IV, HEA programs, and their students may qualify for loan deferments. Since they are not administering federal student aid, they are only required to reapply for their eligibility determination upon our request, otherwise their eligibility status continues indefinitely.

Participating Institutions

Current Regulations: As noted above, § 600.20 provides that all participating institutions must apply if they want to continue their eligibility and certification to participate. Included among the reasons why a participating institution must reapply is where we request it to do so (§ 600.20(b)(1)). Additionally, § 600.20(c) includes a number of other conditions under which an institution must reapply.

Proposed Regulations: Proposed § 600.20(b)(2) would require a currently eligible institution that participates in title IV, HEA programs to apply for a determination that it continues to meet the requirements of 34 CFR parts 600 and 668 as provided in paragraphs (b)(2)(i) through (iii) of § 600.20.

Section 600.20(b)(2)(i) of the proposed regulations would apply when a participating institution wishes to continue its participation beyond the expiration of the current eligibility and certification. Section 600.20(b)(2)(ii) would require a participating institution to reapply to reestablish its eligibility and certification as a private nonprofit or private for-profit institution, after a change in ownership that results in a change of control, as described in § 600.31. Section 600.20(b)(2)(iii) would require a reapplication if the participating institution experienced any changes in its status as a proprietary, nonprofit, or public institution (e.g., changed its status from for-profit to nonprofit).

Reasons: In order to clarify and to make easier for institutions to comply with the rules, we propose to consolidate the regulatory requirements for the reapplication process into one section, § 600.20(b).

We initially proposed to continue the current requirements that prescribe when a participating institution must reapply for a determination that it continues to meet the standards necessary to participate in the title IV, HEA programs. One of these requirements was when the Secretary, at his discretion, required reapplication. Although this proposed regulation was substantially equivalent to the existing regulation found at § 600.20(b)(1), several members of the committee objected to what they believed was an overly broad extension of the Secretary's authority to regulate, beyond the scope of authority expressly granted or intended by the HEA.

While affirming that we would not use this authority to require reapplication in a capricious or arbitrary manner, we explained that the Secretary must reserve the right to require a review of any institution that gives cause for concern. We indicated that the reapplication process affords us an opportunity for such a review. Various committee members believed we already have that authority under other existing regulations.

The committee ultimately agreed that a narrower regulatory approach that differentiated application requirements between eligible, non-participating institutions and eligible participating institutions, would accommodate concerns regarding fair and consistent application of our authority to review. The proposed regulation makes clear that the Secretary may request reapplication from eligible non-participating institutions at any time, because they are not subject to the ordinary reapplication cycle.

In proposed § 600.20(b)(2)(ii), we would not require a public institution to reapply for approval if its governance changed and that change included an acknowledgment by the new governing entity, on behalf of the institution, of the institution's continuing responsibilities under its program participation agreement. Other changes in governance that do not acknowledge the public institution's ongoing responsibilities under its program participation agreement would be changes of ownership that require reapplication. Additional information on the effect of

the change of governance for public institutions can be found under the discussion of § 600.31(c)(7).

Finally, several of the non-federal negotiators expressed concern about the corporate and legal interpretations of ''ownership'', and whether such terms or phrases as ''a change of ownership'' even apply to certain types of educational institutions.

Several non-federal negotiators contested the notion that a ''change in ownership'' applies to a nonprofit entity. They felt strongly that those in the nonprofit sector do not identify with the concept of ''ownership.'' Moreover, one committee member suggested that many nonprofit institutions might fail to comply with the change in ownership regulations, because those institutions may not believe that the regulations apply to them, by virtue of their nonprofit status. We note that the HEA does not exempt non-profit institutions from the change of ownership provisions. However, we understand that clarity in this matter is needed.

To resolve any confusion on this issue the committee evaluated various terms to convey the unique nature and organization of nonprofit entities. One proposal sought to uniformly replace the existing phrase, ''change of ownership'' with ''change in structure, governance, or ownership.'' Although we appreciate that nonprofit entities may not consider the existing regulatory language as properly describing their legal structure and operations, we cautioned that adopting a new phrase for one sector might actually be confused with other commonly accepted terms used in other sectors. Using the phrase ''change of governance'', for example, could possibly indicate something totally different for public institutions.

Ultimately, the committee agreed to use the phrase ''changes its status'' in § 600.20(b)(2)(iii), signaling an organizational change so substantial that it would be a change of ownership resulting in a change in control under the HEA.

Application to Expand Eligibility

Statute: Sections 498(b) and (j) of the HEA outline the application requirements when an institution wishes to expand its eligibility, particularly to branch campuses.

Current Regulations: Section 600.30(a) requires an institution to notify the Secretary of any significant changes it has experienced since its most recent eligibility application. Section 600.20 lists various instances where an institution must make an application to expand its designated eligibility and certification to include additional locations and programs.

Proposed Regulations: Proposed § 600.20(b)(2) lists the events that require an institution to submit a new application. Proposed § 600.20(c) describes the events that require an application to expand eligibility. Except for two new provisions under proposed § 600.20(c), the proposed regulations are very similar to current regulations.

First, at § 600.20(c)(2), we would require an institution to report any increase in the level of program offerings it adds. Second, § 600.20(c)(5) clarifies that an institution must apply for approval if it wishes to convert an existing location to a branch campus.

Reasons: We believe the proposed regulations offer greater clarity on this topic by consolidating all of the related regulations into one section. The current regulations that address expansion of an institution's designated eligibility status are within §§ 600.20 and 600.30, and are not as detailed.

The expansion of an institution's eligibility through the increase of the level of program offerings in § 600.20 (c)(2) was added as one of the requirements for reapplication because this type of change often requires an institution to modify its financial aid and other administrative processes. For example, a change in level of program offerings could affect the institution's determination of program length because of the requirements for ''credit hour conversions''. Similarly, such a change could impact the institution's ability to use the multi-year features of the new master promissory notes in the FFEL and Direct Loan programs.

Finally, the non-federal negotiators suggested that the conversion of an otherwise eligible location to a branch campus be added as § 600.20(c)(5) to address this type of expansion of institutional eligibility.

Exemptions From Applying for Additional Locations

Exemption for public institutions:

Current Regulations: Under § 600.20(c)(3) an institution must apply to add a location not currently a part of its eligibility designation. Those rules do not distinguish among the types of institutions that must apply.

Proposed Regulations: We have proposed in § 600.20(d)(1) that public institutions do not have to apply to the Secretary for approval of an additional location under § 600.20(c)(1), if the additional location is properly licensed and accredited, and is located within the same State as the main campus of the currently designated eligible institution.

Reasons: As noted earlier, the committee did not reach consensus on this issue. During the negotiated rulemaking sessions, we noted that we are not aware of any problems that placed federal funds at risk when a public institution has added additional locations. The public entities that govern these institutions generally apply responsible oversight and systems of control over these institutions, especially with regard to the establishment of additional locations. The additional level of planning, approval, and review generally required by public entities helps to limit rapid growth that could adversely impact educational quality or cause fiscal instability in the administration of title IV funds. Moreover, we believe that the extent of fiscal resources generally made available to public institutions by the public entities that govern them are likely to be substantial enough to safeguard the taxpayers from any potential losses in title IV, HEA program funds.

This exemption only applies to additional locations that are in the same State as the main campus of the public institution, because those locations share the same oversight entities. These additional locations must, of course, be licensed and accredited.

We believe these proposed regulations will enhance efficiency and provide administrative relief for a sizable segment of the population of eligible institutions, by not requiring them to report locations they add until the next scheduled recertification.

Some members of the committee saw this proposed exemption as a benefit unfairly and unduly afforded to a select segment of eligible institutions. One committee member considered the sector-based distinction to be discriminatory, and questioned the legality of the proposed regulations on this basis.

A few committee members suggested that any institution, regardless of its structure or control, that meets the licensing and accreditation standards, and whose additional location was in the same State as the main campus, should receive the same exemption as that being proposed for public institutions.

Several non-federal negotiators added that many private nonprofit and private for-profit institutions have maintained stellar performance records in their administration of the title IV, HEA programs. They also believed that many of these institutions were subject to reasonable oversight from States, accrediting agencies, and industry associations. They argued that any

school that demonstrated consistent compliance with our regulations, and had sufficient systems to meet administrative and financial capability standards should be entitled to the same exemption being offered to the public institutions.

We maintained that it was neither novel nor extraordinary for a federal agency to rely upon the oversight and financial backing provided to public institutions. We believe that this governmental oversight over public institutions limits risks to federal funds.

While it is true that some non-public institutions administer their programs in a way that does not pose any fiscal risk to the federal taxpayers, that is not the case for all such institutions. On the other hand, all public institutions have considerable financial support available to help them meet their title IV, HEA program obligations.

Non-public institutions operate in environments that pose significantly higher financial risks than do public institutions. Our experience includes situations where some non-public institutions grew so rapidly that the integrity of their educational and student aid programs was compromised. The level of growth and expansion strained those institutions' financial resources and administrative capability and, ultimately, they failed, causing great harm to students and losses to taxpayers of title IV student assistance funds.

During the discussion on this exemption for public institutions, the amount of burden associated with reporting additional locations was considered. While the actual reporting of proposed additional locations does not involve much burden (the school simply uses our web-based application screens), the school representatives on the committee pointed out that the need to wait for our approval of the new location before title IV aid could be disbursed could create an unnecessary delay. Even though we generally provide our response within about 35 days, the representatives of public institutions noted that, since we have virtually always approved such sites, there is no need for a public institution to report its addition of new locations. Conversely, it was noted by some other members of the committee that, since the burden to report is not significant, all institutions should be required to report so that the Secretary has knowledge of all locations where students are receiving title IV funds.

Again, this specific provision—an exemption for public institutions from the requirement to report additional locations—was one where consensus was not reached by the negotiated rulemaking committee. Consistent with the committee's protocols addressing the issuance of proposed rules when consensus is not reached, we are including in these proposed rules the full exemption for public institutions. However, in addition to soliciting general comments on the issue of the proposed exemption for public institutions, we especially wish to receive comment on whether the proposal should be modified to require public institutions to notify the Secretary of a new additional location, but exempt them from the requirement to wait for our approval before making disbursements of title IV aid to students enrolled at the new location.

Exemptions for temporary additional locations:

Proposed Regulations: The proposed § 600.20(d)(2) would exempt non-public institutions from applying for approval of licensed and accredited temporary locations if the following specific conditions are met: (1) The institution intends to use the location for not more than 12 months; (2) the institution has not added more than six locations offering at least fifty percent of an educational program since it was last certified; (3) the institution does not have any outstanding title IV, HEA program liabilities; (4) the institution did not acquire the assets of another institution that formerly provided educational programs at that location (and that participated in title IV, HEA programs at that location) within the preceding year; (5) the institution would, if it adds that location, not be subject to a loss of eligibility under proposed § 668.188 (Proposed § 668.188 would apply a loss of eligibility, due to high loan cohort default rates, that was previously imposed against one institution to another institution following a change in status.); and (6) we do not currently prohibit the institution from adding locations without advance notice.

Paragraph (d)(3) of § 600.20 explains what happens when an institution that did not apply for approval of a new location because it did not intend to conduct business longer than twelve months realizes that it will continue for more than one year at that location. The institution must apply as soon as it determines it will be at a location for more than 12 months, but not later than 35 days before the end of the initial twelve-month period. In any case, the institution may not disburse title IV, HEA program funds for attendance at that location beyond the twelve-month period without our approval of that location.

We especially request comment on whether an institution that has provided notification to us that it intends to remain at an additional location for more than one year should immediately stop making title IV disbursements until it receives our approval of that location, as would be the case with any other notification of a permanent additional location.

Reasons: An institution may provide training on a temporary basis at off-campus sites, in order to be responsive to the needs of its community. The negotiators agreed that allowing institutions to open a limited number of temporary training locations without reapplication assists the community in meeting its goal of partnering with institutions to accommodate the workforce training requirements of business and industry. We believe that the specific conditions in the proposed rule provide assurance that temporary additional locations will not adversely affect the institution.

When discussing this issue of providing a limited exemption to the reporting of temporary additional locations for non-public institutions, the committee considered several options. We ultimately agreed upon language that provides that a non-public institution does not have to apply to the Secretary for approval of a licensed and accredited temporary additional location under certain conditions. Among those conditions is that the institution has not added more than six locations at which it offered more than 50 percent of an educational program since it was last certified to participate in the title IV, HEA programs.

We are interested in receiving specific comment on whether the six locations proposed is the proper number. Also, since the period between certifications could be up to six years, we also wish to receive comment on whether there should be a limit on the number of such locations added during any one year.

While we are proposing this limited exception to the requirement that institutions report and get our approval of new additional locations before they disburse title IV aid, we do have some concerns about the impact this exception might have on our oversight responsibility. One issue is whether we, as the agency responsible for administering title IV funds, should know about all locations at which these funds are being disbursed. Another concern is whether all non-public institutions should be able to add temporary locations without prior approval, including institutions that may not meet the standards of administrative capability or financial

responsibility. An additional concern is that the proposed temporary location exception could be used by schools that would otherwise be unable to obtain our approval to establish new permanent locations or that had been denied such approval in the past.

While the proposed exception requires that the new location be accredited and licensed, some institutions are licensed or accredited by agencies that do not require affirmative prior approval to add new locations. In such cases, therefore, a school would be able to disburse title IV funds to students enrolled at a location that had not received approval from any of the three entities that normally provide oversight—the Department of Education, the State licensing agency, and the accreditation agency. In such cases there would be no external record that the temporary location existed.

In light of the concerns, we are interested in receiving comment on whether requiring notice to the Department, but not prior approval, would create an undue burden, and whether there are certain categories of institutions that should not be able to take advantage of the proposed exception due to problems with their past performance. In addition, we are considering obtaining information on temporary locations through the annual compliance audit and invite comment on such an approach.

Secretary's Responses to Applications

Current Regulations: Under § 600.21(a), (b) and (c), we notify the institution in writing as to its eligibility status.

Proposed Regulations: Proposed § 600.20(f) discusses our various responses to an institution's application (or reapplication) for eligibility or certification. It describes the range of notifications that we will send in response to an institution's application, based upon the type or reason of the application.

Reasons: While the existing § 600.21(a), (b), and (c) address the notifications we provide, the level of specificity is more precise in the proposed regulations. We believe that a clearer connection between the specific reason for the institution's application and the related notification from the Secretary responding to that application will be very useful and practical for applicant institutions.

Disbursement Rules

Current Regulations: Under § 600.40 an institution becomes ineligible to continue to participate in any title IV, HEA program as of the day the institution's period of participation under § 668.13 expires, or if the institution's provisional certification is revoked under § 668.26. However, the current regulations provide certain exemptions and timeframes that allow an ineligible institution to continue to make disbursements of title IV aid funds.

Proposed Regulations: These proposed regulations restate and clarify the existing regulations in § 600.40 and § 668.13 that address the impact of a loss of eligibility and certification on an institution's ability to disburse student financial assistance.

Generally, if an institution's eligibility lapses the institution may not continue to disburse title IV, HEA program funds until it receives our notification that it is eligible to participate in the programs again. However, an institution may make lawful disbursements if it has submitted a materially complete renewal application to us at least ninety days prior to the expiration of its current program participation agreement, and is awaiting our determination of eligibility on its reapplication.

Likewise, a private nonprofit or private for-profit institution may not continue to make lawful disbursements if it experiences a change in ownership or change in status that causes a change in control. But, such an institution may continue to make disbursements lawfully, if it has submitted a materially complete renewal application, received a temporary program participation agreement, and is awaiting our final determination.

Also, when an institution is required to make application to add a program or location, or increase the level of program offering, it may not make any disbursements for that program or location until it receives our notification that the program or location is eligible to participate.

An institution would be permitted to continue making title IV, HEA program disbursements when the institution is simply applying to convert an eligible location to a branch, as permitted under the proposed § 600.20(c)(5).

Finally, if an institution is required to submit an application or reapplication or certification and participation and does not, or has a program that is not determined to be an eligible program, or has added a location that is not approved, the institution is liable for all title IV, HEA program funds disbursed to students enrolled at that institution, in that program, or at that location or branch.

Reasons: We do not want students or institutions to experience any adverse impact from an abrupt disruption of programs, services, or financial assistance, caused by an institution's temporary loss of eligibility to participate in our programs. We also want to limit such impact from the expiration of an institution's program participation agreement if a new application is being reviewed. Acceptance of a timely submitted, materially complete application assures a consistent flow of funds and program services for the students who depend upon them.

Section 600.21—Updating Application Information

Current Regulations: Section 600.30 requires an institution to notify us no later than 10 days after changes occur in the information it provided to us in its last eligibility application.

Proposed Regulations: The proposed regulations would remove § 600.30, but keep most of its core elements, and expand them in a newly revised § 600.21. The expanded section would require additional information about changes relating to an institution's other locations, as well as, the main campus itself. Included in the proposed language is a requirement that a decrease in the level of program offered requires the institution to notify the Secretary.

Reasons: While much of proposed § 600.21 remains unchanged from the current regulations in § 600.30, the proposed regulations slightly alter a number of things. For instance, the proposed regulation would amend the list of positions or persons that are now deemed to substantially affect the actions of the institution, eliminating members of an institution's board of directors or trustees. However, those regulations would now clearly identify the chief executive officer, chief financial officer, and the individual designated as the lead program administrator for title IV, HEA programs at the institution. We believe that this approach more effectively identifies those individuals that have the ability to substantially affect an institution's administration of the title IV, HEA programs.

Discussion occurred regarding when an institution owned by a publicly-traded corporation could be expected to know about and report changes that occur, particularly related to change of ownership issues. Currently, a publicly-traded institution is required to notify us when it notifies its accrediting agency, but no later than 10 days after the corporation learns of the change. Some committee members questioned how these institutions could be held

responsible to notify us within ten days after a change occurs, since the institution's administration might not always have current information to identify changes in the position of the major shareholders. Others contended that it was likely that the institutions would be aware of material changes to the corporations that owned them.

Ultimately, we decided to require in § 600.21(b) that the institution must notify us of the material changes described in § 600.21 (a)(5) when it notifies its accrediting agency, but no later than 10 days after the change is known to the institution.

Section 600.21(d) clarifies the consequences of an institution's failure to notify the Secretary as required.

Section 600.31—Change in Ownership Resulting in a Change in Control for Private Nonprofit and Private for-Profit Institutions

Statute: Section 498(i) of the HEA provides that an institution that undergoes a change in ownership resulting in a change in control ceases to qualify as an eligible institution after the change in control until it establishes that it meets eligibility and certification requirements.

Publicly-Traded Corporations

Current Regulations: Section 600.31(c)(2) treats a change in ownership and control of a publicly-traded corporation as occurring when a transaction takes place that causes the filing of a Form 8–K with the Securities and Exchange Commission (SEC).

Proposed Regulations: The proposed rule at § 600.31(c)(2) would clarify the circumstances in which a reduction in an ownership interest in a publicly-traded corporation results in a change of control within the meaning of section 498(i) of the HEA.

Currently, those changes are predicated upon an event that requires a publicly-traded corporation to file a Form 8–K with the SEC. The proposed regulations would augment that condition with another, which would consider such a change to have occurred if one who was a controlling shareholder of the corporation ceases to be a controlling shareholder.

For these purposes, we would consider a controlling shareholder to be a person who holds or controls twenty-five percent or more of the total outstanding voting stock of the corporation. This proposed regulation would use that percentage as a ''bright line'' in determining whether a person is in fact a controlling shareholder. This definition would not apply to ''institutional investors'' or to shareholders whose sole stock ownership is held in mutual funds, profit-sharing plans, or Employee Stock Option Plans (ESOPs).

Reasons: Although changes in ownership and control that occur when a person acquires a controlling interest in the corporate owner of an institution seem to be readily identified, other transactions may cause a change impacting which person holds a controlling interest, without that person having acquired new stock that would have triggered a Form 8–K filing with the SEC.

For example, stock sales by other shareholders or stock repurchases by the parent corporation may alter the currently largest shareholder's majority position so that that person is no longer the largest shareholder. Other corporate actions, such as the spin-off of a subsidiary corporation, may cause a significant change in the identity of the persons who can control the corporation, even if the transaction results in no single person holding enough of an interest to be easily identified as a controlling shareholder.

We continue to believe that the eligibility of institutions must be reassessed when these changes occur, just as current regulations require for those institutions owned by closely held and other corporations. However, for institutions owned by publicly-traded corporations, identifying the circumstances in which a reduction in an ownership interest actually causes a change in ownership and control to occur poses significant practical difficulties. The change proposed here would adopt a ''bright line'' test to identify those ownership interests that are large enough to be considered controlling interests in a publicly-traded corporate owner of an institution. This proposed change will only apply to situations where a change in controlling interests does not arise through the traditional stock acquisition that would trigger a Form 8–K filing with the SEC. The changes in control arising from the acquisition of an ownership interest that trigger the Form 8–K filing will continue to be identified by the facts specific to that corporation. Current rules regarding acquisition of an ownership interest, except as specifically noted here, are not affected by these changes.

The proposed ''bright line'' test only applies to controlling shareholders that own or control at least 25 percent of the corporation. We considered that some generally accepted accounting principles (GAAP) treat a 20 percent ownership interest as sufficient to create a presumption of control of a publicly-traded corporation. *See,* Accounting Practices Board Opinion 18, ¶17.

Using that standard, a reduction in ownership interest to less than 20 percent would also create a presumption of loss of control. However, this accounting benchmark would be used to create a rebuttable presumption that a change of control had occurred; more analysis would sometimes be needed to tell whether control had actually been lost at the point when ownership interest fell below that threshold.

As a result of the negotiated rulemaking meetings, we listened to representatives from the institutions who argued that the 20 percent threshold might be too low for a ''bright line'' test, and agreed to simplify the measure by raising the threshold to 25 and changing it to be a ''bright line'' test.

Therefore, since our current regulations already associate controlling interests with ownership of at least 25 percent of a publicly-traded corporation, the proposed rule will treat a 25 percent interest as giving rise to a conclusive presumption of control, for purposes of analyzing reductions in control, if that holding is also the largest ownership interest in the corporation.

Under the proposed rule, any transaction that causes the holder of at least a 25 percent ownership interest that is also the largest interest in the corporation to reduce that interest to less than 25 percent, or less than the interest of any other shareholder, constitutes a change in ownership and control within the meaning of section 498(i) of the HEA.

In addition, we recognize that when an institution undergoes a complete or partial change in ownership and control, it must apply to reestablish its eligibility and certification to participate in the title IV, HEA programs, and if approved, may remain provisionally certified for not more than three years. In that application, the institution must identify those shareholders with substantial interests in the institution. The provisional certification gives us an opportunity to conduct some assessment of the potential influence of those shareholders on institutional affairs.

Therefore, if a reduction in ownership interest of the controlling shareholder causes a change in ownership to occur within the term of this provisional certification, the institution must reapply for certification, but the term of the following provisional certification will not extend beyond the term of the initial provisional certification, if the person who thereby becomes the

controlling shareholder was identified on the prior application.

Recognizing that publicly traded corporations currently file financial reports with the SEC, a publicly-traded institution that undergoes a change in ownership due to a reduction in ownership interest may submit its most recent quarterly financial statement filed with the SEC, together with copies of all other SEC filings made since the close of the fiscal year for which the institution last submitted a compliance audit, when the prospects of obtaining a ''same day'' balance sheet are impractical.

Public Institutions

Current Regulations: Section 600.31(c)(7) provides that an institution that is owned by a public entity changes ownership and control when that entity is transferred to another governmental entity or other person.

Proposed Regulations: The proposed regulation provides that a change in governance at a public institution is not a change in ownership, if the institution's new governing body is in the same State included in the public institution's program participation agreement and the new governing body has acknowledged the institution's continuing responsibilities under its program participation agreement.

Reasons: Our original position on this issue was met with significant opposition from some of the non-federal negotiators, as we related earlier in our discussions on proposed § 600.20(d)(1), and the committee did not reach consensus on this point. We are including in these proposed rules, substantially the same proposal we submitted to the negotiating committee. The only difference is the inclusion of a provision that makes it clear that we would not consider a change in governance at a public institution to be a change of ownership only if the new governing authority is in the same State included in the public institution's program participation agreement and the new governing body has acknowledged the institution's continuing responsibilities under its program participation agreement.

As we stated there, we believe the fiscal resources available to public institutions and their history of compliance allows us to provide this limited regulatory relief.

A change of governance at a public institution is not a change in ownership if the institution's new governing body is in the same State included in the program participation agreement and the new governance has acknowledged that the institution continues to be bound by its program participation agreement. Under such circumstances, we believe the possibilities for fiscal or administrative instability to occur are remote, and there is virtually no threat to taxpayers' funds.

A change in ownership resulting in a change of control would occur, however, if a public institution's governance changes, and that new governing body is not located in the same State identified in the institution's program participation agreement or the new governing body has not acknowledged the institution's continuing obligations under the terms of the institution's program participation agreement. In such cases, the institution would be required to comply with the change of ownership provisions of § 600.20(b)(2)(iii).

Several non-federal negotiators felt that our position was biased in favor of public institutions. One committee member suggested that as more State and municipal governments create partnerships with corporate or non-profit entities, the traditional attributes of public governance are often lost, and therefore, the stabilizing factors that we rely upon for our position will be undermined.

Another non-federal negotiator suggested that the trend of privatization and divestiture of public units and institutions should give us reason for caution, in terms of the reliance we have placed on the history of compliance of such entities. He suggested that some schools might actually decrease the level or extent of compliance, based upon its governance by a different entity that might have lower thresholds or standards for compliance.

We considered these arguments, but noted that the situations described by the negotiators would not result from the proposed exception. The provision does not apply to a change in governance in a public entity that involves the transfer of the institution to any hybrid entity, such as a special corporation with limited liability, a public-private partnership, or that results in joint ownership with any out-of-state entities. Also, the exemption is not available if the new governing body does not, in the process of gaining control of the public institution, acknowledge the institution's continuing responsibilities under its program participation agreement with us.

We understand that a change in governance at a public institution could arise in many different ways. Such a change could come from a directive by an executive agency, a change in law by a State legislature, through a voter referendum, or through a contractual agreement between two governmental entities. The proposed regulation does not require the governing bodies or the institution to notify us of a change in governance, so long as the conditions set out in the regulation are satisfied.

The regulation requires the new governing body to have acknowledged the institution's continuing responsibilities under its program participation agreement, but does not specify any particular format for the acknowledgment. The acknowledgment that the institution continues to be responsible for meeting its obligations in its program participation agreement must be written, and must be a part of the documents that transfer control to the new governing body.

Where the formal transfer of governing authority did not acknowledge this requirement, the institution under its new governance could submit a written notice to us advising that it was acknowledging its continuing responsibilities under its program participation agreement. This separate notice to us would also satisfy the requirement. We invite comment on whether a particular form of acknowledgment should be required under any of these situations.

Section 668.2—General Definitions (Academic Year); and Section 668.8—Eligible Program

Statute: Section 481 of the HEA requires an academic year to have at least 30 weeks of instructional time. For certain program eligibility purposes, the HEA requires a minimum of ten or fifteen weeks of instructional time.

Current Regulations: Sections 668.2(b) and 668.8 reflect the statutory requirement that, in order for an educational program to meet the definition of both an academic year and an eligible program, it has to include a minimum number of weeks of instructional time. The existing regulations provide criteria that address what activity, and what amount of that activity, is needed to determine a week of instructional time.

An educational program that uses a semester, trimester, or quarter system, (or one that measures academic progress in clock hours) must have at least one day of instructional time in a week for that week to count as a week of instructional time. This requirement is often referred to as the ''one-day rule''. Full-time students at schools with programs offered in semesters, trimesters and quarters are generally presumed to be in class for 12 hours each week. For purposes of consistency, an educational program that measures

academic progress in credit hours but does not use a semester, trimester, or quarter system, must have at least 12 hours of instructional time in a week for that week to count as a week of instructional time. This requirement is generally referred to as the ''twelve-hour rule''.

Proposed Regulations: The proposed regulations would amend § 668.2(b)(2)(ii) in the definition of an academic year, and § 668.8(b) (3) and (4) to clarify that homework does not count as instructional time, and that, in terms of ''preparation for examinations'', only study for final examinations that occurs after the last scheduled day of classes for a payment period would count as instructional time.

Reasons: Several negotiators pointed out that the current regulatory approach does not adequately address newer, non-traditional approaches to the delivery of postsecondary education to students, such as distance education. They urged us to eliminate or substantially modify our current regulations in this area, especially the so-called ''twelve-hour rule.'' While we understood and appreciated the comments of the non-federal negotiators, we remained concerned about possible abuse if institutions that did not use semester, trimester or quarter systems were, without any other controlling factor, able to construct academic programs that included only a minimal amount of instructional time each week. Thus, after considerable discussion during the negotiations we decided that we did not have enough information on alternative measures to responsively propose substantive changes in these regulations at this time. No changes were proposed to the current regulatory requirement. We invited the negotiators and other interested parties to participate in future discussions to address the issues surrounding the one-day and twelve-hour rules, and other related issues. The efforts of this workgroup may result in recommended changes to the HEA or our regulations, subject to a future negotiated rulemaking process.

Consequently, the only modifications to the definition of an academic year and an eligible program that are proposed here are clarifications of: (1) Homework in the determination of weeks of instructional time; and, (2) study for final examinations that occurs after the last scheduled day of classes for a payment period.

It was never intended that homework should count as instructional time in determining whether a program meets the definition of an academic year, since the 12-hour rule was designed to quantify the in-class component of an academic program. For that reason, the only time spent in ''preparation for exams'' that could count as instructional time was the preparation time that some institutions schedule as study days in lieu of scheduled classes between the end of formal class work and the beginning of final exams.

Section 668.5—Written Arrangements To Provide Educational Programs

Statute: Section 484(a) of the HEA provides that a recipient of title IV program funds must be enrolled in an eligible academic program leading to a degree or certificate at an eligible institution.

Current Regulations: Read literally, the statutory language could suggest that a student may only receive title IV funding for academic work offered by the eligible institution that has accepted the student into a degree or certificate program. However, in order to provide flexibility to both students and institutions and to allow for the benefits that can accrue when a student takes classes at different institutions, the regulations include provisions whereby students may receive title IV aid while taking a part of their academic program outside of the institution that admitted them.

Section 600.9 of the Institutional Eligibility regulations and § 690.9 of the Federal Pell Grant Program regulations govern written agreements between an eligible institution and another institution or organization when all or part of a student's educational program is provided by the other school or organization. These agreements are commonly referred to as consortium and contractual agreements.

Proposed Regulations: We propose to delete §§ 600.9 and 690.9 and consolidate most of the provisions currently contained in those sections into a new § 668.5 of the Student Assistance General Provisions regulations.

In addition, we propose a new provision in § 668.5(b) to provide that an eligible institution may have a written arrangement with a study abroad organization that represents one or more foreign institutions instead of separate agreements directly with each foreign institution its students are attending.

Finally, we would create a new provision in § 668.5(d) that, in cases of a written arrangement between eligible institutions, would allow any of the institutions participating in the written arrangement to make title IV, HEA program calculations and disbursements without that institution being considered to be a third-party servicer for the institution at which the student is enrolled as a regular student.

Reasons: One reason for proposing the consolidation of the provisions covering these arrangements is to simplify the title IV, HEA program regulations. This consolidation, in addition to making the regulations easier to use, will also make it clear that the provisions apply to all of the title IV student assistance programs and not just to the Federal Pell Grant Program which is regulated in part 690.

The main reason for proposing that institutions may enter into written agreements with study abroad organizations instead of directly with a foreign institution is to provide more flexibility to institutions in structuring their study abroad programs.

Currently, if an eligible institution wants to enter into a written arrangement with one or more foreign institutions under which those foreign institutions provide part of the educational program for students enrolled in the eligible institution, the eligible institution must have a written agreement directly with each foreign institution its students will be attending. However, in many cases study abroad organizations represent foreign institutions by facilitating enrollment arrangements, including managing required student payments to the foreign institution.

Under proposed § 668.5(b), if an eligible institution has a written agreement with a study abroad organization that represents one or more foreign institutions that provide part of the educational program of students enrolled in the eligible institution, the eligible institution would no longer be required to have an agreement directly with the foreign institutions. The written agreement between the eligible institution and the study abroad organization would be sufficient for purposes of the administration of the title IV, HEA programs, provided that the written agreement between the eligible institution and the study abroad organization, adequately describes the duties and responsibilities of each entity and meets the requirements of the regulations.

Consistent with current regulations, proposed § 668.5(d)(2) would allow an eligible institution that enters into an arrangement with one or more other eligible institutions to choose which of them calculates and disburses title IV, HEA aid. However, under existing regulations the student must be taking courses at the institution that calculates and disburses the aid. The proposed regulations would allow any of the

eligible institutions in the arrangement to calculate and disburse the aid, even if the student is not taking courses at the institution that is calculating and disbursing the aid. This is to allow and support the diverse ways in which institutions are partnering to enable students to have greater access to postsecondary education. We support these arrangements and wish to facilitate these partnerships by allowing them to choose who best to administer their aid programs.

Section 668.13—Certification Procedures [Training Requirements]

Current Regulations: Section 668.13(a)(4) requires that, under certain circumstances (e.g., a new institution or change of ownership, participation in a new title IV, HEA program), specified institutional staff must attend and complete title IV, HEA program training. Under those circumstances, all institutions must send their financial aid administrator to the training. Additionally, institutions that are nonprofit must send either their chief administrator, or someone he or she designates to this training. In addition to the financial aid administrator, for-profit institutions are required to send the chief administrator of the school for training. The regulations allow for an on-site certification review as an alternative to meeting the training requirement, if one or more of the required individuals has previously completed such training.

Proposed Regulations: In addition to a restructuring of paragraph (a) of § 668.13, the proposed regulations modify and simplify the certification training requirements for chief executive officers and financial aid administrators.

First, the proposed regulations limit the conditions under which this training is required to only when an institution wishes to participate in the title IV, HEA programs for the first time and when there is a change of ownership. We propose to remove the current requirement that training is also required when a currently participating institution wishes to participate in a new title IV, HEA program.

Second, these proposed regulations provide that, for all institutions the chief executive may elect to send for title IV certification training another executive level officer of the institution in his or her stead. Both the chief financial aid administrator and the chief executive of the institution, or designee, must attend the certification training within twelve months after the institution executes its program participation agreement. In addition, the institution may request a waiver of the training requirement for either the financial aid administrator or the chief administrator.

The proposed rules provide that we may grant or deny the waiver for the required individual, require another official to take the training, or require alternative training.

Reasons: We believe that it is unnecessary to require senior administrators from institutions that already participate in some of our programs to attend specialized training, simply because the institution wishes to add a title IV, HEA program in which they do not currently participate.

We recognized and agreed with the non-federal negotiators that the current regulations could, in some cases, impose an impractical burden on the chief administrators of for-profit institutions by requiring their attendance at the title IV certification training. Thus, we now propose to give those chief administrators the same ability to designate another senior institutional official to attend the training, as is now allowed for nonprofit institutions.

Also, if the chief administrator or his designee, or the person designated as the title IV administrator has recently completed the required title IV HEA program certification training, there currently is no training alternative for the participating institution to otherwise meet the training requirement. As proposed, § 668.13(a) allows the institution to request a waiver of the training requirement and provides that we may either grant the waiver or require alternative training that would be more beneficial.

Section 668.19—Financial Aid History

Statute: Section 484 of the HEA contains a number of student eligibility provisions that a student must satisfy, or not violate, to receive aid under any of the title IV, HEA programs. Included are provisions that deny additional title IV, HEA program assistance to a student who is in default on a title IV loan or owes an overpayment of title IV aid. In addition, most of the title IV, HEA student aid programs have annual or aggregate maximum amounts, or both, that a student may not exceed.

Current Regulations: Section 668.19 requires institutions to obtain student eligibility information for transfer students by either requesting a financial aid transcript (FAT) from each institution the student previously attended or, under certain conditions, obtaining information from the National Student Loan Data System (NSLDS). Use of NSLDS, while allowed is not required. Thus, institutions that receive FAT requests from other institutions or from students must complete and return them.

Additionally, current requirements distinguish between two types of transfer students: a student who attended another institution in a prior award year (prior-year transfer) and a student who transfers from one institution to another institution during the same award year (current-year transfer). For a prior-year transfer, an institution may use the Institutional Student Information Record (ISIR) information it receives for that student or obtain that information by requesting a paper FAT from the other institutions attended by the prior-year transfer student. Generally, for a current-year transfer student an institution must request a paper FAT from the institution the student previously attended during the award year.

In all cases where an institution or student requests a paper FAT, the regulations require the other institution to complete and promptly return the FAT.

Proposed Regulations: The proposed regulations eliminate the paper FAT requirement for all students and mandate the use of NSLDS data for purposes of obtaining financial aid history information. However, the proposed regulations make a distinction between the two types of transfer students. Thus, for a prior-year transfer, an institution could continue to rely on the ISIR financial aid history information it receives for that student. But, for a current-year transfer student, instead of requesting a paper FAT from the other institution, an institution would request updated student eligibility information from NSLDS.

In addition, the proposed regulations would replace the various certification, origination, and disbursement provisions in the current rules with only one requirement: an institution may not make a disbursement of title IV, HEA program funds to a current-year transfer student for seven days after it requests updated information from NSLDS. The proposed rules would, however, allow an institution to make a disbursement to a student who is otherwise eligible if, within the seven-day period, NSLDS provides the updated information to the institution, or the institution obtains the information itself directly from NSLDS.

Finally, the proposed regulations eliminate the requirement that an institution that receives a request for the completion of a paper FAT, must respond to that request.

Reasons: We believe that it is no longer necessary for an institution to

request student eligibility information from another institution when that information is available from NSLDS, particularly in view of the burden imposed on an institution in complying with the paper FAT requirements.

During the negotiations we submitted a draft proposal to the committee under which an institution would obtain student eligibility information for a current-year transfer directly from NSLDS. However, because institutions and guaranty agencies report student aid disbursement data to NSLDS only periodically, we wanted to limit the number of instances where NSLDS could not provide accurate data at the time an institution would seek that data for a current-year transfer. Therefore, we proposed than an institution had to query NSLDS no earlier than 30 days before it could disburse aid to a current-year transfer in order to ensure, to the greatest extent possible, that NSLDS would have the aid disbursement data from prior institutions at that time.

Although the non-federal negotiators appreciated our effort to eliminate the paper FAT requirements, most believed that the draft fell short of its intended benefits. Several negotiators suggested that requiring an institution to query NSLDS within the 30-day period was too restrictive, particularly in view of the current rules where an institution may request an FAT at any time. Moreover, some negotiators felt the draft plan would create rather than reduce burden, because for many institutions the query and subsequent review of the NSLDS data would occur at a time between terms when a financial aid staff is at its busiest. Another negotiator believed that eliminating the burden now imposed on institutions in responding to FAT requests outweighed the burden of query and review of NSLDS data. The negotiators suggested that the we find a way to provide student eligibility data directly to an institution that needs it, rather than requiring institutions to request and review information for all current-year transfer students within a very specific timeframe.

We adopted the non-federal negotiators' suggestions. Under proposed § 668.19, an institution would, at any time, request NSLDS to provide it with eligibility data for a current-year transfer. We expect, but do not require, that this request would be made as soon as the institution determines that a student is interested in transferring during the current year. In making its request, the institution would provide information identifying the student, such as name, social security number, and date of birth. After receiving the institution's request, NSLDS would compare the disbursement data it has at that time to the most recent ISIR generated for the student that contained disbursement data. If NSLDS has more recent disbursement data, or later acquires disbursement data for that student, it would provide that updated information directly to the requesting institution. Thus, NSLDS would provide updated disbursement data that was not previously provided to the institution whenever it acquires that data from other institutions or guaranty agencies. We believe that this will greatly reduce burden on institutions, because once they submit the identifiers for their current-year transfers, they will only receive NSLDS information for those students that had current year disbursements not already reported to the institution.

The proposed rules provide that, after making its request, an institution has to wait seven days before it could make a disbursement of title IV, HEA programs funds to a student. This timeframe was established to ensure that NSLDS could process the requests, query its database, and report back to an institution before aid is disbursed. However, if the student is otherwise eligible, an institution is allowed to make a disbursement within the seven-day period if it receives the updated information from NSLDS, or queries NSLDS on-line to obtain that information.

The negotiators supported this proposal and agreed that we should hold further discussions with institutions, outside of the negotiated rulemaking process, over the next several months regarding the following administrative matters:

- The way or ways an institution would request NSLDS to provide it with updated data;
- The types of data changes within NSLDS that would generate a record to the school;
- The way or ways NSLDS would provide the data to institutions and the contents and format of that data; and
- The period for which NSLDS would continue to provide updated data for a student.

Section 668.165—Notices and Authorizations

Current Regulations: Section 668.165(a)(3)(ii) requires an institution to provide a notice to a student or parent borrower when title IV, HEA program loan proceeds are used to credit the student's account at the institution. The regulation allows this notice to be sent electronically, but with the requirement that the institution must require the student or parent to confirm receipt of the notice and the institution must maintain a copy of that confirmation.

Proposed Regulations: Under the proposed regulation, the institution must confirm receipt by the student or parent of the electronic notification and must maintain documentation of that confirmation. This is a change from the requirement that the institution require the student or parent to confirm receipt.

Reasons: During negotiated rulemaking some of the non-federal negotiators suggested that the current regulations in this area did not support their constituents' efforts to take advantage of advances in electronics.

They specifically objected that, with regard to the notice required when loan funds are credited to a student's account, if the school notified the borrower electronically, the school was required to obtain and maintain a copy of the confirmation of receipt from the student or parent. They pointed out that this level of confirmation and documentation was not required when the same notice was sent via the U.S. Postal Service. They asked why they could not simply send the required notification electronically, and monitor any ''returned mail'', just as they do with mail sent through the U.S. Postal Service.

We noted the long-standing precedent that mail deposited with the U.S. Postal Service is presumed to have been delivered unless it is returned to the sender. We shared our concern about the lack of a standard for the handling of undeliverable electronic messages in the different email systems that schools use. Just because a school sends a message electronically does not assure that it was received. For example, some email systems report as ''undeliverable'' any message that does not make it all the way to the intended recipient's email account. However, other systems may only send an ''undeliverable'' message if the transmission does not make it to the recipient's email provider, regardless of whether the provider is able to deliver the mail to the recipient's account. In other instances, an ''undeliverable'' message might not be sent to the institution even if the message never reaches the email provider. Thus, relying only upon the lack of an ''undeliverable'' message, would not be sufficient to ensure that these important consumer protection messages were actually received by the borrower. Therefore, we declined to make the changes suggested by the non-federal negotiators.

At the last round of the negotiations we were asked to at least change the retention requirement so that all an institution needed to do was to

demonstrate that it had used a system that monitored receipt. The presenter of that proposal suggested that, while she would prefer a more drastic relaxation of the requirement, at least this suggestion would not require schools to create and maintain a system that tracks and retains these electronic transmissions for several years.

We believe that ensuring that these important messages were actually delivered to the recipients' email account requires confirming that the individual messages are sent and received, rather than simply monitoring the presence of a reliable notification system. Thus, we do not feel that changing the current requirement to simply require documentation of a school process can be made at this time.

However, in reviewing this issue we decided that some clarifications could be made to reflect policy guidance that has been provided in this area. Specifically, the current rule states that the institution must require the recipient of the message to confirm that the message has been received. We have consistently interpreted that provision to only require confirmation that the notice was received by the student or parent, that is, that the electronic mail was delivered to the correct address.

Therefore, we are proposing that the regulation simply require the school to confirm receipt by the student or parent of the electronic notification and maintain documentation of that confirmation.

Federal Work-Study Program

Section 675.19—Fiscal Procedures and Records

Current Regulations: Section 675.19(b)(2)(i) requires an institution to establish and maintain program and fiscal records that include, among other things, a certification that each FWS student has worked and earned the amount being paid. This certification must be signed by the FWS student's supervisor, who is either an official of the institution or off-campus agency. For students paid on an hourly basis, this certification must be part of, or supported by, a time record showing the hours each student worked in clock time sequence or the total hours worked per day.

Proposed Regulations: These proposed regulations would amend § 675.19(b)(2)(i) by removing the requirement that the certification must have the handwritten signature of the FWS student's supervisor. This change provides flexibility to institutions by allowing the use of an electronic certification or a certification through other appropriate means. The proposed regulation still allows institutions the option of continuing to have the FWS student's supervisor sign his or her name on a paper certification.

We expect an institution that chooses to use a system that incorporates an electronic certification to adopt reasonable safeguards against possible fraud and abuse. The institution should provide a secure electronic certification through an electronic payroll system that includes:

- Password protection;
- Password changes at set intervals;
- Access revocation for unsuccessful log-ins;
- User identification and entry point tracking;
- Random audit surveys with supervisors; and
- Security tests of the code access.

Reasons: The current requirement for a handwritten signature from the FWS student's supervisor predates the development of electronic alternatives to indicate that the supervisor certified the time record. A number of institutions have expressed the desire to implement an electronic system that can process time records for all its employees, including FWS students.

However, the current requirement of collecting a handwritten signature from an FWS student's supervisor on a paper certification often prevents, or at least diminishes, the effectiveness of an automated electronic payroll system.

The proposed regulatory change does not remove the certification requirement. The certification requirement helps ensure that the supervisor is reviewing the time record prior to paying an FWS student. This is an important safeguard to help maintain the integrity of the FWS Program by paying only students who worked and by paying only the correct amount of funds earned by the students.

Federal Family Education Loan Programs and Federal Direct Loan Program

Section 682.201 and 685.200—Eligible Borrowers

Statute: Section 428B(a)(1)(A) of the HEA states, among other things, that parents of dependent students are eligible to borrow PLUS loans in the FFEL and Direct Loan programs, if they do not have an adverse credit history.

Current Regulations: Sections 682.201(b)(1) and 685.200(b)(1) list the criteria that a parent borrower must meet to be eligible to borrow a PLUS Program loan. One criterion for a Federal PLUS loan made on or after July 1, 1993, is that the parent borrower must not have an adverse credit history.

The regulation further indicates that, unless the lender determines that extenuating circumstances exist, the lender must consider that an applicant has an adverse credit history based on several enumerated reasons that may appear in the applicant's credit report.

If the lender does determine that extenuating circumstances exist, the regulation requires the lender to retain documentation demonstrating its basis for making that determination.

Proposed Regulations: The proposed regulation would amend § 682.201(b)(1)(vii)(F) to require that the lender retain a record (instead of documentation) demonstrating its basis for determining that extenuating circumstances exist in such a situation. Similarly, where the regulation indicates what that documentation may include, the proposed regulation would indicate what such a record may include.

Reasons: This change in the two places noted to the word ''record'' in place of the word ''documentation,'' is a clarification of the existing regulation.

A lender has never had to maintain original documents that showed what its basis was for determining that extenuating circumstances existed, although it could do so.

The proposed regulation provides some examples of what the record of such a determination may include (an updated credit report, a statement from the creditor that the borrower has made satisfactory arrangements to repay the debt, or a satisfactory statement from the borrower explaining any delinquencies with outstanding balances of less than $500). This record that demonstrates the lender's determination that extenuating circumstances existed could be the original applicable document. However, it could also be an electronic (or other type of) copy of such a document.

Section 682.207—Due Diligence in Disbursing a loan

Statute: Section 428G of the HEA establishes the requirements for the disbursement of student loans under the FFEL Program.

Current Regulations: Under § 682.207(b)(1) and (c)(3), a lender is required to disburse loan proceeds to a school in accordance with the disbursement schedule provided by the school.

Proposed Regulations: Proposed changes to § 682.207(b)(1) and (C)(3) would explicitly allow a lender to disburse loan proceeds either in accordance with the disbursement schedule or in accordance with another request made by a school that modifies that schedule.

Reasons: Under proposed § 682.207(b)(1) and (c)(3), a lender could continue to provide loan proceeds to a school based solely on the disbursement schedule provided by the school on a loan certification. Or, the school and the lender could agree that loan proceeds would be provided at the school's request under an alternate process like the current ''hold and release'' process used by some FFEL lenders and guaranty agencies. Under the hold and release process, a school instructs the lender not to provide the loan funds for a borrower according to the disbursement schedule provided in the loan certification. Rather, the lender holds the funds until the school requests the lender to release those funds for that borrower.

Although the current regulations do not prohibit schools and lenders from using the hold and release process, we wish to make explicit in the regulations that schools have the flexibility to request a modification to the original disbursement schedule, and lenders have the authority to provide FFEL loan proceeds, in a manner that best meets their administrative needs. Thus, the proposal would allow FFEL lenders to release loan funds upon the specific request of the school to modify the original schedule, rather than according to the disbursement schedule originally presented in the loan certification.

Current Regulations: Section 682.207(f) allows a lender to disburse loan proceeds after the student has ceased to be enrolled on at least a half-time basis if, among other things, the school certifies the borrower's loan eligibility before the date the borrower became ineligible and the loan funds will be used to pay educational costs that the school determines the student incurred for the period in which the student was enrolled and eligible. The regulation requires the lender to give notice to the school that the loan proceeds are being disbursed based on the above noted situation.

Proposed Regulations: The proposed regulation would amend § 682.207(f) by dropping the requirement for the lender to give notice to the school of the reason that the loan proceeds are being disbursed in this situation.

Reasons: In order for the lender to disburse the loan proceeds in this situation, the school must determine that there are educational costs (that are intended to be covered by the loan) that the student incurred for the period in which the student was enrolled and eligible. Therefore, since it makes the determination about the student's incurred educational costs, the school will know the reason that the loan proceeds are being disbursed by the lender in this situation. Thus, requiring the lender to give notice of that fact is not necessary.

Section 682.604(b)—Releasing Loan Proceeds

Current Regulations: Before a school may release FFEL Program loan proceeds to a student, it must determine that the student has continuously maintained eligibility, as provided in § 682.201. The current regulations specifically require the school to make this determination after it receives the loan proceeds from the lender.

Proposed Regulations: Proposed § 682.604(b)(2)(i) would not require a school to determine a student's eligibility after it receives loan proceeds from a lender.

Reasons: As part of the negotiations of Committee I, the FFEL industry recommended that the regulations be revised in several ways to better accommodate the processes under which lenders and the Secretary provide title IV program funds to schools. In response, we submitted a proposal to Committee I describing a new payment method that incorporated many of the FFEL industry's recommendations.

We and the non-federal negotiators reached tentative agreements on many of the provisions of the proposed payment method. However, consensus was not reached on our entire proposal, nor on alternatives to that proposal that were put forth by some non-federal negotiators. Under the protocols adopted by the committee, when consensus is not reached we may publish proposed regulations that may or may not reflect any tentative agreements, or that address all or some of the issues discussed during the negotiated rulemaking sessions. Consistent with these protocols, we propose to make a revision to § 682.604(b)(2) of the FFEL Program regulations.

Under the General Provisions regulations, and in each of the program regulations, a school may disburse Title IV, HEA program funds only to, or on behalf of, an eligible student. The specific provision in the FFEL Program regulation at § 682.604(b)(2) is the only one in the regulations that requires a school to make an eligibility determination after it receives program funds. Under all of the other regulations, a school has the flexibility to implement policies and procedures that ensure that a student meets all of the eligibility requirements before it disburses funds. This proposed change would extend this flexibility to FFEL Program funds as well.

In addition, the proposed change would eliminate a conflict between the current provisions in § 682.604(b)(2) and the General Provisions regulations in § 668.164(a). Under § 668.164(a), a school makes a disbursement of Title IV, HEA program funds whenever it credits a student's account, regardless of whether the school has received program funds from the Secretary or a lender. As discussed above, a school must ensure that it only disburses Title IV, HEA program funds to eligible students. However, under current § 682.604(b)(2) a school that makes a disbursement of FFEL Program funds to, or on behalf of, an eligible student by crediting the student's account before it receives the funds from a lender, must make another eligibility determination after it receives those funds from the lender. We are proposing to modify the current regulation to make clear that since the General Provisions regulations in § 668.164(a) apply to disbursements of all program funds, the school in the example above does not need to make another eligibility determination.

Section 682.604(c)(6)—Processing the Borrower's Loan Proceeds and Counseling Borrowers; and Section 685.301—Origination of a Loan by a Direct Loan Program School

Statute: Section 428G(a)(2) of the HEA provides that FFELP loans generally must be disbursed in at least two installments. The second installment cannot be made any earlier than half-way through the loan period except for semester, quarter, or similar term situations. Then the second installment is allowed to be made at the beginning of the second semester, quarter, or similar term. Federal Direct Loan Program loans are made under the same conditions pursuant to section 455 of the HEA.

Current Regulations: In the FFEL Program, except for the situation in which the date of one or more scheduled disbursements has passed before a lender makes a disbursement, § 682.604(c)(6) requires, among other things, that the school deliver loan proceeds at least once in each payment period when a loan period is more than one payment period. Section 682.604(c)(7) states that in cases where a school uses credit hours and terms other than semesters, trimesters, or quarters, it may not deliver a second loan disbursement until the later of the calendar midpoint of the loan period or the date when the student has completed half of the academic coursework in the loan period. Section 685.301(b) has similar provisions for the Direct Loan Program.

Proposed Regulations: In the FFEL Program, the proposed change to § 682.604(c)(6) adds § 682.604(c)(7) as one exception to the rule that a school deliver loan proceeds at least once in each payment period. In the Direct Loan Program, § 685.301(b)(2) already includes a reference to a provision corresponding to § 682.604(c)(7).

In addition, in the FFEL Program and in the Direct Loan Program, the proposed regulations would amend §§ 682.604(c)(7) and 685.301(b)(5) so that they do not preclude a school from delivering loan proceeds in each term in those situations in which the school measures progress in credit hours and uses terms other than semesters, trimesters, or quarters as long as those non-standard terms are substantially equal in length throughout the loan period.

Credit hour schools that do not use terms, or use terms that are not substantially equal in length, would continue to be required to wait until the later of the calendar midpoint of the loan period or the date that the student has completed half of the academic coursework in the loan period before delivering the second disbursement of the loan.

Terms within a loan period would be considered to be substantially equal in length if no term in the period was more than two weeks shorter than any other term in the period.

Reasons: Since all terms in which a school uses credit hours are considered to be payment periods according to § 668.4 of the Student Assistance General Provisions regulations, there is an inconsistency in the FFEL Program regulations between §§ 682.604(c)(6) and (c)(7) in some situations. This inconsistency does not exist in the Direct Loan Program regulations as noted above.

In the FFEL Program for example, if a school uses credit hours and has five terms in its academic year, § 682.604(c)(6) indicates that the school should deliver loan proceeds at least once each term. But, § 682.604(c)(7) indicates that the school may not deliver a second disbursement until the later of the calendar midpoint of the loan period or the date by which the student has completed half of the academic coursework in the loan period. We have removed that inconsistency.

With regard to the change in the treatment of terms other than semesters, trimesters, or quarters, that are of substantially equal length, we have proposed the same treatment for those terms as is currently provided for semesters, trimesters, or quarters. We have done this because it appears reasonable to treat all terms in the same manner, without regard to the number of terms that a school has, as long as all of the terms in the loan period are substantially equal in length.

However, for terms that are not substantially equal in length, we have retained the current requirement that there be two disbursements, with the second disbursement being made at the later of the calendar midpoint of the loan period or the date that the student has completed half of the academic coursework of the loan period. We have done this to prevent a second or subsequent disbursement from being made too early in a student's loan period when the earlier disbursement would be for an amount that substantially exceeds the amount that would be proportional to the period for which it is made.

For example, if a school had two terms in a 30-week academic year, one of which was 10 weeks and the other was 20 weeks long, we would not want the second disbursement (equal to half of the loan amount) to be made in the eleventh week, the beginning of the second term.

Executive Order 12866

1. Potential Costs and Benefits

Under Executive Order 12866, we have assessed the potential costs and benefits of this regulatory action.

The potential costs associated with the proposed regulations are those resulting from statutory requirements and those we have determined as necessary for administering these programs effectively and efficiently.

As more fully described elsewhere in this preamble, these proposed regulations, developed through a negotiated rulemaking process with the higher education community, would implement a variety of streamlining and clarifying provisions to provide institutions additional flexibility in the administration of the title IV, HEA programs. In assessing the potential costs and benefits of this regulatory action—both quantitative and qualitative—we have determined that the benefits would justify the costs.

We have also determined that this regulatory action would not unduly interfere with State, local, and tribal governments in the exercise of their governmental functions.

2. Clarity of the Regulations

Executive Order 12866 and the President's Memorandum of June 1, 1998 on ''Plain Language in Government Writing'' require each agency to write regulations that are easy to understand.

We invite comments on how to make these proposed regulations easier to understand, including answers to questions such as the following:

- Are the requirements in the proposed regulations clearly stated?
- Do the proposed regulations contain technical terms or other wording that interferes with their clarity?
- Does the format of the proposed regulations (grouping and order of sections, use of headings, paragraphing, etc.) aid or reduce their clarity?
- Would the proposed regulations be easier to understand if we divided them into more (but shorter) sections? (A ''section'' is preceded by the symbol ''§ '' and a numbered heading; for example, § 675.19 *Fiscal procedures and records.*)
- Could the description of the proposed regulations in the **SUPPLEMENTARY INFORMATION** section of this preamble be more helpful in making the proposed regulations easier to understand? If so, how?
- What else could we do to make the proposed regulations easier to understand?

Send any comments that concern how the Department could make these proposed regulations easier to understand to the person listed in the **ADDRESSES** section of the preamble.

Regulatory Flexibility Act Certification

The Secretary certifies that these proposed regulations would not have a significant economic impact on a substantial number of small entities. Entities affected by these regulations are institutions of higher education that participate in the title IV, HEA programs. The institutions are defined as small entities, according to the U.S. Small Business Administration, if they are: for-profit or nonprofit entities with total revenue of $5,000,000 or less; or entities controlled by governmental entities with populations of 50,000 or less. These proposed regulations would not impose a significant economic impact on a substantial number of small entities. The regulations would benefit both small and large institutions by providing additional flexibility in the administration of: the Institutional Eligibility requirements; the certification procedures for institutions; the financial aid history verification requirements; the cash management requirements; the written arrangements requirements; the FFEL Programs; Direct Loan Program and Federal Work-Study Programs, without requiring significant changes to current institutional system operations.

These proposed regulations would ease administrative burden and augment

student benefits by: consolidating and streamlining procedures for establishing, reestablishing, maintaining or expanding institutional eligibility and certification; expanding options for institutions that enter contractual agreements with other entities for the delivery of eligible programs and title IV, HEA program funds disbursement; improving the process to verify the financial aid history of title IV, HEA program fund recipients; streamlining the disbursement rules for non-traditional programs that participate in either the FFEL or Direct Loan programs; expanding electronic options for notifications in cash management; providing flexibility to schools and lenders in the disbursement of loan funds; and streamlining the collection of hours worked by FWS Program hourly employees through allowing institutions to implement an automated timekeeper system using electronic signatures to verify hours worked.

We invite comments from small institutions as to whether the proposed changes would have a significant economic impact on them.

Paperwork Reduction Act of 1995

Proposed §§ 600.20, 600.21, 600.31, 668.13, 668.19 and 675.19 contain information collection requirements. Under the Paperwork Reduction Act of 1995 (44 U.S.C. 3507(d)), the Department of Education has submitted a copy of these sections to the Office of Management and Budget (OMB) for its review. These sections contain the recordkeeping and reporting provisions for various title IV, HEA programs, detailed in the following paragraph.

Collection of information: Student Assistance General Provisions—§ 600.20—Application procedures for establishing, reestablishing, maintaining, or expanding institutional eligibility and certification. The proposed regulations would streamline the application and reapplication procedures that institutions must follow to obtain eligibility and certification to participate in the title IV, HEA programs. New flexibility is proposed regarding the format of the application, the process of adding additional and temporary locations, and an institution's ability to make disbursements after its eligibility or certification has expired.

Section 600.21—Updating application information. The proposed regulations in this section clarify the instances requiring notification of updated information, and the procedures for making such notification. The reporting timeframes for institutions owned by publicly traded corporations are significantly altered in these proposed regulations.

Section 600.31—Change in ownership resulting in a change in control for private nonprofit and private for-profit institutions. These regulations specifically address procedures and requirements institutions must follow when they have experienced a change in ownership, resulting in a change of the people or entities that govern those institutions. Generally, schools must reapply when such a change occurs. These proposed regulations modify the criteria an institution must consider to determine if, or to what extent, such a change occurred.

Section 668.13—Certification procedures [training requirements]. The proposed regulations offer alternatives to the training requirements for institutional certification, and the option to request a waiver from the training.

Section 668.19—Financial Aid History. The proposed regulations amend the process for confirming a transfer student's financial aid history, eliminating the need to use paper forms to meet the requirements.

Federal Work-Study Program—§ 675.19—Fiscal procedures and records. The proposed regulations allow a FWS student's supervisor to certify electronically or through other means, that each student has worked and earned the amount being paid. This proposed change eliminates the restriction that the FWS certification must have a handwritten signature and reduces the administrative burden for certifying FWS time records.

Federal Family Education Loan Program and William D. Ford Direct Loan Program—§ 682.201—Eligible borrowers. The proposed regulations revise this section to allow greater flexibility to FFEL Program lenders in record retention regarding the documentation required to establish an adverse credit history for a parent borrower.

Section 682.207—Due diligence in disbursing a loan. We propose to change this section to allow a lender in the FFEL Program to disburse funds to a school based upon the school's modification to the disbursement schedule originally provided in the loan certification. Another proposed change to this section eliminates the requirement that a lender in the FFEL Program provide notice to the school when it disburses funds to the school after the student is no longer enrolled on at least a half-time basis.

Section 682.604—Processing the borrower's loan proceeds and counseling borrowers and § 685.301—Origination of a loan by a Direct Loan Program school. These proposed changes clarify and eliminate a regulatory contradiction in the loan disbursement rules for nontraditional programs under the FFEL and Direct Loan programs.

Our current estimate is that the existing total annual recordkeeping and reporting burden hours for all of the affected sections listed above will not change. We do not anticipate any significant changes in these hours as a result of the proposed regulations that would result in an increase in the current estimates. We believe the additional flexibilities these regulations propose may reduce the annual recordkeeping and burden hours for many institutions.

We will monitor the impact of the proposed flexibilities to determine the nature and extent of any impact upon institutions.

If you want to comment on the information collection requirements, please send your comments to the Office of Information and Regulatory Affairs, OMB, room 10235, New Executive Office Building, Washington, DC 20503; Attention: Desk Officer for U.S. Department of Education. You may also send a copy of these comments to the Department representative named in the **ADDRESSES** section of this preamble.

We consider your comments on these proposed collections of information in—

- Deciding whether the proposed collections are necessary for the proper performance of our functions, including whether the information will have practical use;
- Evaluating the accuracy of our estimate of the burden of the proposed collections, including the validity of our methodology and assumptions;
- Enhancing the quality, usefulness, and clarity of the information we collect; and
- Minimizing the burden on those who must respond. This includes exploring the use of appropriate automated, electronic, mechanical, or other technological collection techniques or other forms of information technology; e.g., permitting electronic submission of responses.

OMB is required to make a decision concerning the collections of information contained in these proposed regulations between 30 and 60 days after publication of this document in the **Federal Register**. Therefore, to ensure that OMB gives your comments full consideration, it is important that OMB receives the comments within 30 days of publication. This does not affect the deadline for your comments to us on the proposed regulations.

Intergovernmental Review

These title IV, HEA program funds are not subject to the requirements of Executive Order 12372 and the regulations in 34 CFR part 79.

Assessment of Educational Impact

The Secretary particularly requests comments on whether the proposed regulations would require transmission of information that any other agency or authority of the United States gathers or makes available.

Electronic Access to This Document

You may view this document, as published in the **Federal Register**, in text or Adobe Portable Document Format (PDF) on the Internet at the following sites:

http://ocfo.ed.gov/fedreg.htm
http://ifap.ed.gov/csb_html/fedlreg.htm

To use the PDF you must have the Adobe Acrobat Reader Program with Search, which is available free at the first of the previous sites. If you have questions about using the PDF, call the U.S. Government Printing Office (GPO), toll free, at 1–888–293–6498; or in the Washington, DC, area at (202)–512–1530.

Note: The official version of this document is the document published in the **Federal Register**. Free Internet access to the official edition of the **Federal Register** and the Code of Federal Regulations is available on GPO Access at: http://www.access.gpo.gov/nara/index.html

(Catalog of Federal Domestic Assistance Number: 84.007 Federal Supplemental Educational Opportunity Grant Program; 84.032 Federal Family Education Loan Program; 84.032 Consolidation Program; 84.032 Federal PLUS Program; 84.032 Federal Supplemental Loans for Students Program; 84.033 Federal Work-Study Program; 84.037 Federal Perkins Loan Cancellation Program; 84.038 Federal Perkins Loan Program; 84.063 Federal Pell Grant Program; 84.069 Leveraging Educational Assistance Partnership Program; 84.268 Federal William D. Ford Federal Direct Loan Program)

List of Subjects

34 CFR Part 600

Administrative practice and procedure, Colleges and universities, Consumer protection, Grant programs—education, Loan programs—education, Reporting and recordkeeping requirements, Student aid.

34 CFR Part 668

Administrative practice and procedure, Colleges and universities, Consumer protection, Grant programs—education, Loan programs—education, Reporting and recordkeeping requirements, Student aid.

34 CFR Part 675

Colleges and universities, Employment, Grant programs—education, Reporting and recordkeeping requirements, Student aid.

34 CFR Part 682

Administrative practice and procedure, College and universities, Loan programs—education, Student aid, Vocational education, Reporting and recordkeeping requirements.

34 CFR Part 685

Administrative practice and procedure, College and universities, Loan programs—education, Student aid, Vocational education, Reporting and recordkeeping requirements.

34 CFR Part 690

Grant programs—education, Reporting and recordkeeping requirements, Student aid.

Dated: August 4, 2000.

Richard W. Riley,

Secretary of Education.

For the reasons stated in the preamble, the Secretary proposes to amend title 34 of the Code of Federal Regulations by amending parts 600, 668, 675, 682, 685 and 690 as follows:

PART 600—INSTITUTIONAL ELIGIBILITY UNDER THE HIGHER EDUCATION ACT OF 1965, AS AMENDED

1. The authority citation for part 600 continues to read as follows:

Authority: 20 U.S.C. 1001, 1002, 1003, 1088, 1091, 1094, 1099b, and 1099c, unless otherwise noted.

§§ 609.9 and 600.30 [Removed]

2. Sections 600.9 and 600.30 are removed.

3. Section 600.10 is amended by removing and reserving paragraph (a)(2) and by revising paragraphs (b)(3)(i) and (b)(3)(ii) to read as follows:

§ 600.10 Date, extent, duration, and consequence of eligibility.

* * * * *

(b) * * *

(3) * * *

(i) The Secretary approves that location under § 600.20(f)(5); or

(ii) The location is licensed and accredited and the institution does not have to notify the Secretary about that location under § 600.20(d).

* * * * *

4. Section 600.20 is revised to read as follows:

§ 600.20 Application procedures for establishing, reestablishing, maintaining, or expanding institutional eligibility and certification.

(a) *Initial eligibility application.* An institution that wishes to establish its eligibility to participate in any HEA program must submit an application to the Secretary for a determination that it qualifies as an eligible institution under this part. If the institution also wishes to be certified to participate in the title IV, HEA programs, it must indicate that intent on the application, and submit all the documents indicated on the application to enable the Secretary to determine that it satisfies the relevant certification requirements contained in 34 CFR part 668, subparts B and L.

(b)(1) *Reapplication.* A currently designated eligible institution that is not participating in the title IV, HEA programs must apply to the Secretary for a determination that the institution continues to meet the requirements in this part if the Secretary requests the institution to reapply.

(2) A currently designated eligible institution that participates in the title IV, HEA programs must apply to the Secretary for a determination that the institution continues to meet the requirements in this part and 34 CFR part 668 if the institution wishes to—

(i) Continue to participate in the title IV, HEA programs beyond the scheduled expiration of the institution's current eligibility/certification designation;

(ii) Reestablish eligibility/certification as a private nonprofit or private for-profit institution following a change in ownership that results in a change in control as described in § 600.31; or

(iii) Reestablish eligibility/certification after the institution changes its status as a proprietary, nonprofit, or public institution.

(c) *Application to expand eligibility.* A currently designated eligible institution that wishes to expand the scope of its eligibility/certification and disburse title IV, HEA Program funds to students enrolled in that expanded scope must apply to the Secretary for approval to—

(1) Add a location at which the institution offers 50 percent or more of an educational program, unless the institution is exempt from this requirement under paragraph (d) of this section;

(2) Increase its level of program offerings (e.g., adding graduate degree programs when it previously offered only baccalaureate degree programs);

(3) Add an educational program if the institution is required to apply to the Secretary for approval under § 600.10(c);

(4) Add a branch campus at a location that is not currently included in the institution's eligibility/certification designation; or

(5) Convert an eligible location to a branch campus.

(d) *Exemptions from applying for additional locations*—(1) *Exemption for public institutions.* A public institution does not have to apply to the Secretary for approval of a licensed and accredited additional location under paragraph (c)(1) of this section if the additional location is in the same State as the main campus. The institution must report those locations in its next recertification application.

(2) *Exemption for temporary additional locations for non-public institutions.* A non-public institution does not have to apply to the Secretary for approval of a licensed and accredited temporary additional location under paragraph (c)(1) of this section if—

(i) The institution intends to use that location for not more than 12 months and has not yet used that location for more than 12 months;

(ii) The institution has not added more than six locations at which it offered more than 50 percent of an educational program since it was last certified to participate in the title IV, HEA programs;

(iii) The institution does not have any outstanding title IV, HEA program liability;

(iv) The institution did not acquire the assets of an institution that provided educational programs at that location during the preceding year and participated in the title IV, HEA programs during that year;

(v) The institution would not be subject to a loss of eligibility under 34 CFR 668.188 if it adds that location; and

(vi) The Secretary does not currently preclude the institution from opening additional locations without notice to the Secretary.

(3) *More than one year at a temporary location.* If an institution does not apply to the Secretary for approval of a temporary additional location under the provisions of paragraph (c)(1) of this section because it did not intend to operate at that location for more than 12 months, and the institution will stay at that location for more than 12 months, the institution—

(i) Must apply to the Secretary for approval of that additional location as soon as it determines that it will stay at that location for more than 12 months, but not later than 35 days before the end of that 12-month period; and

(ii) May not disburse title IV, HEA program funds after the 12-month period has expired to students enrolled at that location until the Secretary approves that location.

(e) *Application format.* To satisfy the requirements of paragraphs (a), (b), and (c) of this section, an institution must apply in a format prescribed by the Secretary for that purpose and provide all the information and documentation requested by the Secretary to make a determination of its eligibility and certification.

(f) *Secretary's response to applications.* (1) If the Secretary receives an application under paragraph (a) or (b)(1) of this section, the Secretary notifies an institution—

(i) Whether the applicant institution qualifies in whole or in part as an eligible institution under the appropriate provisions in §§ 600.4 through 600.7; and

(ii) The locations and educational programs that qualify as the eligible institution if only a portion of the applicant qualifies as an eligible institution;

(2) If the Secretary receives an application under paragraph (a) of this section and that institution applies also to participate in the title IV, HEA programs, the Secretary notifies the institution—

(i) Whether the institution is certified to participate in those programs;

(ii) The title IV, HEA programs in which it is eligible to participate;

(iii) The title IV, HEA programs in which it is eligible to apply for funds;

(iv) The effective date of its eligibility to participate in those programs; and

(v) The conditions under which it may participate in those programs;

(3) If the Secretary receives an application under paragraph (b)(2) of this section, the Secretary notifies the institution whether it continues to be certified, or whether it reestablished its eligibility/certification, to participate in the title IV, HEA programs.

(4) If the Secretary receives an application to have a branch campus certified to participate in the title IV, HEA programs as a branch campus, the Secretary notifies the institution whether that branch campus is certified to participate and the date that the branch campus is eligible to begin participation;

(5) If the Secretary receives an application under paragraph (c)(1) of this section for an additional location, the Secretary notifies the institution whether the location is eligible or ineligible to participate in the title IV, HEA programs, and the date of eligibility if the location is determined eligible; and

(6) If the Secretary receives an application under paragraph (c)(2) of this section for an increase in the level of program offerings, or for an additional educational program under § 600.10(c) and paragraph (c)(3) of this section, the Secretary notifies the institution whether the program qualifies as an eligible program, and if the program qualifies, the date of eligibility.

(g) *Disbursement rules related to applications.* (1)(i) Except as provided under paragraph (g)(1)(ii) of this section and 34 CFR 668.26, if an institution submits an application under paragraph (b)(2)(i) of this section because its participation period is scheduled to expire, after that expiration date the institution may not disburse title IV, HEA program funds to students attending that institution until the institution receives the Secretary's notification that the institution is again eligible to participate in those programs.

(ii) An institution described in paragraph (g)(1)(i) of this section may disburse title IV, HEA program funds to its students if the institution submits to the Secretary a materially complete renewal application in accordance with the provisions of 34 CFR 668.13(b)(2), and has not received a final decision from the Secretary on that application.

(2)(i) Except as provided under paragraph (g)(2)(ii) of this section and 34 CFR 668.26, if a private nonprofit or private for-profit institution submits an application under paragraph (b)(2)(ii) or (b)(2)(iii) of this section because it has undergone or will undergo a change in ownership that results in a change of control or a change in status, the institution may not disburse title IV, HEA program funds to students attending that institution after the change of ownership or status until the institution receives the Secretary's notification that the institution is eligible to participate in those programs.

(ii) An institution described in paragraph (g)(2)(i) of this section may disburse title IV, HEA program funds to its students if the Secretary approves the institution's materially complete application under paragraph (i) of this section, and has not received a final decision from the Secretary on that application.

(3) If an institution must apply to the Secretary under paragraphs (c)(1) through (c)(4) of this section, the institution may not disburse title IV, HEA program funds to students attending the subject location, program, or branch before the institution receives the Secretary's notification that the location, program, or branch is eligible

to participate in the title IV, HEA programs.

(4) If an institution applies to the Secretary under paragraph (c)(5) of this section to convert an eligible location to a branch campus, the institution may continue to disburse title IV, HEA program funds to students attending that eligible location.

(5) If an institution does not apply to the Secretary to obtain the Secretary's approval of a new location, program, increased level of program, or branch, and the location, program, or branch does not qualify as an eligible location, program, or branch of that institution under this part and 34 CFR part 668, the institution is liable for all title IV, HEA program funds it disburses to students enrolled at that location or branch or in that program.

(Authority: 20 U.S.C. 1001, 1002, 1088, and 1099c)

5. Section 600.21 is revised to read as follows:

§ 600.21 Updating application information.

(a) *Notice requirements.* Except as provided in paragraph (b) of this section for the information described in paragraph (a)(5) of this section, an eligible institution must notify the Secretary in a manner prescribed by the Secretary, no later than 10 days after the change occurs, of any change in the following:

(1) Its name, the name of a branch, or the name of a previously reported location.

(2) Its address, the address of a branch, or the address of a previously reported location.

(3) The way it measures program length (e.g., from clock hours to credit hours, or from semester hours to quarter hours).

(4) A decrease in the level of program offerings (e.g. the institution drops its graduate programs).

(5) A person's ability to affect substantially the actions of the institution if that person did not previously have this ability. The Secretary considers a person to have this ability if the person—

(i) Holds alone or together with another member or members of his or her family, at least a 25 percent ''ownership interest'' in the institution as defined in § 600.31(b);

(ii) Represents or holds, either alone or together with other persons, under a voting trust, power of attorney, proxy, or similar agreement at least a 25 percent ''ownership interest'' in the institution, as defined in § 600.31(b); or

(iii) Is a general partner, the chief executive officer, or chief financial officer of the institution.

(6) The individual the institution designates under 34 CFR 668.16(b)(1) as its title IV, HEA Program administrator.

(b) *Institution's notice to the Secretary.* An institution that is owned by a publicly traded corporation must notify the Secretary of any change in the information described in paragraph (a)(5) of this section when it notifies its accrediting agency, but no later than 10 days after the institution learns of the change.

(c) *Secretary's response to notice.* The Secretary notifies an institution if any reported change affects the institution's eligibility, and the effective date of that change.

(d) *Consequence of failure to notify.* An institution's failure to inform the Secretary of a change described in paragraph (a) of this section within the time period stated in that paragraph may result in adverse action against the institution.

(e) *Definition.* For purposes of this section, the Secretary considers a member of a person's family to be his or her—

(1) Parent, sibling, spouse or child;

(2) Spouse's parent or sibling;

(3) Child's spouse; and

(4) Sibling's spouse.

(Authority: 20 U.S.C. 1001, 1002, 1088, and 1099c)

6. Section 600.31 is amended by:

A. Revising the section heading.

B. Revising the first sentence of paragraph (a)(1).

C. Redesignating paragraph (a)(2) as paragraph (a)(3) and adding a new paragraph (a)(2).

D. Removing the definition of ''ownership'' in paragraph (b) and adding, in its place, the definition of ''ownership or ownership interest''.

E. Revising paragraphs (c)(2), (c)(6), and (c)(7).

F. Removing the word ''or'' at the end of paragraph (d)(6).

G. Revising paragraph (d)(7) and adding paragraph (d)(8).

The additions and revisions read as follows:

§ 600.31 Change in ownership resulting in a change in control for private nonprofit and private for-profit institutions.

(a) * * *

(1) Except as provided in paragraph (a)(2) of this section, a private nonprofit or private for-profit institution that undergoes a change in ownership that results in a change in control ceases to qualify as an eligible institution upon the change in ownership and control.

* * *

(2) If a private nonprofit or private for-profit institution has undergone a change in ownership that results in a change in control, the Secretary may, under the provisions of § 600.20(h) and (i), continue the institution's participation in the title IV, HEA programs on a provisional basis, provided that the institution submits under the provisions of § 600.20(h) a materially complete application—

(i) No later than 10 business days after the change occurs; or

(ii) For an institution owned by a publicly traded corporation, no later than 10 business days after the institution knew, or should have known of the change based upon SEC filings, that the change occurred.

* * * * *

(b) * * *

Ownership or ownership interest. (1) Ownership or ownership interest means a legal or beneficial interest in an institution or its corporate parent, or a right to share in the profits derived from the operation of an institution or its corporate parent.

(2) Ownership or ownership interest does not include an ownership interest held by—

(i) A mutual fund that is regularly and publicly traded;

(ii) An institutional investor, such as a pension fund or insurance company;

(iii) A profit-sharing plan of the institution or its corporate parent, provided that all full-time permanent employees of the institution or corporate parent are included in the plan; or

(iv) An Employee Stock Ownership Plan (ESOP).

* * * * *

(c) * * *

(2) *Publicly traded corporations required to be registered with the Securities and Exchange Commission (SEC).* A change in ownership and control occurs when—

(i) A person acquires such ownership and control of the corporation so that the corporation is required to file a Form 8K with the SEC notifying that agency of the change in control; or

(ii)(A) A person who is a controlling shareholder of the corporation ceases to be a controlling shareholder. A controlling shareholder is a shareholder who holds or controls through agreement both 25 percent or more of the total outstanding voting stock of the corporation and more shares than any other shareholder. A controlling shareholder for this purpose does not include a shareholder whose sole stock ownership is held as an institutional investor, held in mutual funds, held through a profit-sharing plan, or held in an Employee Stock Ownership Plan (ESOP).

(B) When a change of ownership occurs as a result of paragraph (c)(2)(ii)(A) of this section, the institution may submit its most recent quarterly financial statement as filed with the SEC, along with copies of all other SEC filings made after the close of the fiscal year for which a compliance audit has been submitted to the Department of Education, instead of the ''same day'' balance sheet.

(C) If a publicly traded institution is provisionally certified due to a change in ownership under paragraph (c)(2)(ii) of this section, and that institution experiences another change of ownership under paragraph (c)(2)(ii) of this section, an approval of the subsequent change in ownership does not extend the original expiration date for the provisional certification provided that any current controlling shareholder was listed on the change of ownership application for which the original provisional approval was granted.

* * * * *

(6) *Nonprofit institution.* A nonprofit institution changes ownership and control when a change takes place that is described in paragraph (d) of this section.

(7) *Public institution.* The Secretary does not consider that a public institution undergoes a change in ownership that results in a change of control if there is a change in governance and the institution after the change remains a public institution, provided:

(i) The new governing authority is in the same State as approved in the institution's program participation agreement; and

(ii) The new governing authority has acknowledged the public institution's continued responsibilities under its program participation agreement.

(d) * * *

(7) A change in status from a for-profit to a nonprofit institution; or

(8) A change in status from a nonprofit to a for-profit institution.

* * * * *

PART 668—STUDENT ASSISTANCE GENERAL PROVISIONS

7. The authority citation for part 668 is revised to read as follows:

Authority: 20 U.S.C. 1001, 1002, 1003, 1085, 1091, 1091b, 1092, 1094, 1099c, and 1099c–1, unless otherwise noted.

8. Section 668.2(b) is amended by revising paragraphs (2)(ii) and (iii) and adding paragraph (2)(iv) to the definition of the term ''academic year'' to read as follows:

§ 668.2 General definitions.

* * * * *

(b) * * *

Academic year: * * *

(2) * * *

(ii) If an institution provides an educational program using a semester, trimester, or quarter system, or in clock hours, the Secretary considers that the institution provides one week of instructional time in that program during any week the institution provides for that program—

(A) At least one day of regularly scheduled instruction or examinations; or

(B) After the last scheduled day of classes for a term, at least one day of study for final examinations.

(iii) If an institution provides an educational program using credit hours but not a semester, trimester, or quarter system, the Secretary considers that the institution provides one week of instructional time in that program during any week the institution provides for that program—

(A) At least 12 hours of regularly scheduled instruction or examinations; or

(B) After the last scheduled day of classes for a payment period, at least 12 hours of study for final examinations.

(iv) Instructional time does not include any vacation periods, homework, or periods of orientation or counseling.

* * * * *

9. A new § 668.5 is added to read as follows:

§ 668.5 Written arrangements to provide educational programs.

(a) *Written arrangements between eligible institutions.* If an eligible institution enters into a written arrangement with another eligible institution, or with a consortium of eligible institutions, under which the other eligible institution or consortium provides all or part of the educational program of students enrolled in the former institution, the Secretary considers that educational program to be an eligible program if it otherwise satisfies the requirements of § 668.8.

(b) *Written arrangements for study abroad.* Under a study abroad program, if an eligible institution enters into a written arrangement with a foreign institution, or an organization acting on behalf of a foreign institution, under which the foreign institution provides part of the educational program of students enrolled in the eligible institution, the Secretary considers that educational program to be an eligible program if it otherwise satisfies the requirements of paragraphs (c)(1) through (c)(3) of this section.

(c) *Written arrangements between an eligible institution and an ineligible institution or organization.* If an eligible institution enters into a written arrangement with an institution or organization that is not an eligible institution under which the ineligible institution or organization provides part of the educational program of students enrolled in the eligible institution, the Secretary considers that educational program to be an eligible program if—

(1) The ineligible institution or organization has not had its eligibility to participate in the title IV, HEA programs terminated by the Secretary, or has not voluntarily withdrawn from participation in those programs under a termination, show-cause, suspension, or similar type proceeding initiated by the institution's State licensing agency, accrediting agency, guarantor, or by the Secretary;

(2) The educational program otherwise satisfies the requirements of § 668.8; and

(3)(i) The ineligible institution or organization provides not more than 25 percent of the educational program; or

(ii)(A) The ineligible institution or organization provides more than 25 percent but not more than 50 percent of the educational program;

(B) The eligible institution and the ineligible institution or organization are not owned or controlled by the same individual, partnership, or corporation; and

(C) The eligible institution's accrediting agency, or if the institution is a public postsecondary vocational educational institution, the State agency listed in the **Federal Register** in accordance with 34 CFR part 603, has specifically determined that the institution's arrangement meets the agency's standards for the contracting out of educational services.

(d) *Administration of title IV, HEA programs.* (1) If an institution enters into a written arrangement as described in paragraph (a), (b), or (c) of this section, except as provided in paragraph (d)(2) of this section, the institution at which the student is enrolled as a regular student must determine the student's eligibility for title IV, HEA program funds, and must calculate and disburse those funds to that student.

(2) In the case of a written arrangement between eligible institutions, the institutions may agree in writing to have any eligible institution in the written arrangement make those calculations and disbursements, and the Secretary does not consider that institution to be a

third party servicer for that arrangement.

(3) The institution that calculates and disburses a student's title IV, HEA program assistance under paragraph (d)(1) or (d)(2) of this section must—

(i) Take into account all the courses in which the student enrolls at each institution that apply to the student's degree or certificate when determining the student's enrollment status and cost of attendance; and

(ii) Maintain all records regarding the student's eligibility for and receipt of title IV, HEA program funds.

(Authority: 20 U.S.C. 1094)

10. Section 668.8 is amended by revising paragraphs (b)(3) and (b)(4) to read as follows:

§ 668.8 Eligible program.

* * * * *

(b) * * *

(3)(i) If an institution provides an educational program using a semester, trimester, or quarter system, or in clock hours, the Secretary considers that the institution provides one week of instructional time in that program during any week the institution provides—

(A) At least one day of regularly scheduled instruction or examinations; or

(B) After the last scheduled day of classes for a term, at least one day of study for final examinations.

(ii) If an institution provides an educational program using credit hours but not a semester, trimester, or quarter system, the Secretary considers that the institution provides one week of instructional time in that program during any week the institution provides—

(A) At least 12 hours of regularly scheduled instruction or examinations; or

(B) After the last scheduled day of classes for a payment period, at least 12 hours of study for final examinations.

(4) Instructional time does not include any vacation periods, homework, or periods of orientation or counseling.

* * * * *

§ 668.12 [Amended]

11. Section 668.12 is amended by:

A. Redesignating paragraphs (f) and (g) as paragraphs (h) and (i) of § 600.20.

B. In newly redesignated paragraph (h)(1) of § 600.20, removing ''an institution'' and adding, in its place, ''a private nonprofit institution or private for-profit institution'' the first time ''institution'' appears.

C. In newly redesignated paragraph (h)(2) of § 600.20, removing ''an institution'' and adding, in its place, ''a private nonprofit institution or private for-profit institution''.

D. In newly redesignated paragraph (i)(2)(iii) of § 600.20, removing ''(f)(3)'' and adding, in its place, ''(h)(3)''.

E. Removing the remainder of § 668.12.

12. Section 668.13 is amended by revising paragraph (a) to read as follows:

§ 668.13 Certification procedures.

(a) *Requirements for certification.* (1) The Secretary certifies an institution to participate in the title IV, HEA programs if the institution qualifies as an eligible institution under 34 CFR part 600, meets the standards of this subpart and subpart L of 34 CFR part 668, and satisfies the requirements of paragraph (a)(2) of this section.

(2) Except as provided in paragraph (a)(3) of this section, if an institution wishes to participate for the first time in the title IV, HEA programs or has undergone a change in ownership that results in a change in control as described in 34 CFR 600.31, the institution must require the following individuals to complete title IV, HEA program training provided or approved by the Secretary no later than 12 months after the institution executes its program participation agreement under § 668.14:

(i) The individual the institution designates under § 668.16(b)(1) as its title IV, HEA program administrator.

(ii) The institution's chief administrator or a high level institutional official the chief administrator designates. (3)(i) An institution may request the Secretary to waive the training requirement for any individual described in paragraph (a)(2) of this section.

(ii) When the Secretary receives a waiver request under paragraph (a)(3)(i) of this section, the Secretary may grant or deny the waiver, require another institutional official to take the training, or require alternative training.

* * * * *

13. Section 668.19 is revised to read as follows:

§ 668.19 Financial aid history.

(a) Before an institution may disburse title IV, HEA program funds to a student who previously attended another eligible institution, the institution must use information it obtains from the Secretary, through the National Student Loan Data System (NSLDS) or its successor system, to determine—

(1) Whether the student is in default on any title IV, HEA program loan;

(2) Whether the student owes an overpayment on any title IV, HEA program grant or Federal Perkins Loan;

(3) For the award year for which a Federal Pell Grant is requested, the student's scheduled Federal Pell Grant and the amount of Federal Pell Grant funds disbursed to the student;

(4) The outstanding principal balance of loans made to the student under each of the title IV, HEA loan programs; and

(5) For the academic year for which title IV, HEA aid is requested, the amount of, and period of enrollment for, loans made to the student under each of the title IV, HEA loan programs.

(b)(1) If a student transfers from one institution to another institution during the same award year, the institution to which the student transfers must request from the Secretary, through NSLDS, updated information about that student so it can make the determinations required under paragraph (a) of this section; and

(2) The institution may not make a disbursement to that student for seven days following its request unless it receives the information from NSLDS in response to its request or obtains that information directly by accessing NSLDS, and the information it receives allows it to make that disbursement.

(Authority: 20 U.S.C. 1091 and 1094)

14. Section 668.165(a)(3)(ii) is revised to read as follows:

§ 668.165 Notices and authorizations.

(a) * * *

(3) * * *

(ii) Either in writing or electronically. If the institution sends the notice electronically, it must confirm receipt by the student or parent of the electronic notification and must maintain documentation of that confirmation.

* * * * *

PART 675—FEDERAL WORK-STUDY PROGRAMS

15. The authority citation for part 675 continues to read as follows:

Authority: 42 U.S.C. 2751–2756b, unless otherwise noted.

16. Section 675.19 is amended by revising paragraphs (b)(1) and (b)(2) to read as follows:

§ 675.19 Fiscal procedures and records.

* * * * *

(b) * * *

(1) An institution must follow the record retention and examination provisions in this part and in 34 CFR 668.24.

(2) The institution must also establish and maintain program and fiscal records that—

(i) Include a certification by the student's supervisor, an official of the institution or off-campus agency, that each student has worked and earned the

amount being paid. The certification must include or be supported by, for students paid on an hourly basis, a time record showing the hours each student worked in clock time sequence, or the total hours worked per day;

(ii) Include a payroll voucher containing sufficient information to support all payroll disbursements;

(iii) Include a noncash contribution record to document any payment of the institution's share of the student's earnings in the form of services and equipment (see § 675.27(a)); and

(iv) Are reconciled at least monthly.

* * * * *

PART 682—FEDERAL FAMILY EDUCATION LOAN PROGRAM

17. The authority citation for part 682 continues to read as follows:

Authority: 20 U.S.C. 1071 to 1087–2, unless otherwise noted.

18. Section 682.201 is amended by revising paragraph (b)(1)(vii)(F) to read as follows:

§ 682.201 Eligible borrowers.

* * * * *

(b) * * *

(1) * * *

(vii) * * *

(F) The lender must retain a record of its basis for determining that extenuating circumstances existed. This record may include, but is not limited to, an updated credit report, a statement from the creditor that the borrower has made satisfactory arrangements to repay the debt, or a satisfactory statement from the borrower explaining any delinquencies with outstanding balances of less than $500.

* * * * *

19. Section 682.207 is amended by:

A. Revising paragraph (b)(1)(i)(B).

B. Revising paragraph (c)(3).

C. Removing ''(1)'' after the paragraph designation ''(f)''; removing paragraph (f)(2); and redesignating paragraphs (f)(1)(i), (f)(1)(ii), and (f)(1)(iii) as paragraphs (f)(1), (f)(2), and (f)(3), respectively.

The revisions read as follows:

§ 682.207 Due diligence in disbursing a loan.

* * * * *

(b)(1) * * *

(i) * * *

(B) Must disburse a Stafford or PLUS loan in accordance with the disbursement schedule provided by the school or any request made by the school modifying that schedule.

* * * * *

(c) * * *

(3) Disbursement must be made on a payment period basis in accordance with the disbursement schedule provided by the school or any request made by the school modifying that schedule.

* * * * *

20. Section 682.604 is amended by:

A. Revising paragraph (b)(2)(i).

B. Revising paragraph (c)(6).

C. Revising paragraph (c)(7).

The revisions read as follows:

§ 682.604 Processing the borrower's loan proceeds and counseling borrowers.

* * * * *

(b) * * *

(2)(i) Except in the case of a late disbursement under paragraph (e) of this section or as provided in paragraph (b)(2)(iii) or (iv) of this section, a school may release the proceeds of any disbursement of a loan only to a student whom the school determines continuously has maintained eligibility in accordance with the provisions of § 682.201 for the loan period certified by the school on the student's loan application.

* * * * *

(c) * * *

(6) Unless the provision of § 682.207(d) or the provisions of paragraph (c)(7) of this section apply—

(i) If a loan period is more than one payment period, the school must deliver loan proceeds at least once in each payment period; and

(ii) If a loan period is one payment period, the school must make at least two deliveries of loan proceeds during that payment period. The school may not make the second delivery until the calendar midpoint between the first and last scheduled days of class of the loan period.

(7)(i) If a school measures academic progress in an educational program in credit hours and either does not use terms or does not use terms that are substantially equal in length for a loan period, the school may not deliver a second disbursement until the later of—

(A) The calendar midpoint between the first and last scheduled days of class of the loan period; or

(B) The date, as determined by the school, that the student has completed half of the academic coursework in the loan period.

(ii) For purposes of paragraph(c)(7) of this section, terms in a loan period are substantially equal in length if no term in the loan period is more than two weeks shorter than any other term in that loan period.

* * * * *

PART 685—FEDERAL WILLIAM D. FORD FEDERAL DIRECT LOAN PROGRAM

22. The authority citation for part 685 is revised to read as follows:

Authority: 20 U.S.C. 1087a through 1087j, unless otherwise noted.

23. Section 685.301 is amended by revising paragraph (b)(5) to read as follows:

§ 685.301 Origination of a loan by a Direct Loan Program school.

* * * * *

(b) * * *

(5)(i) If a school measures academic progress in an educational program in credit hours and either does not use terms or does not use terms that are substantially equal in length for a loan period, the school may not make a second disbursement until the later of—

(A) The calendar midpoint between the first and last scheduled days of class of the loan period; or

(B) The date, as determined by the school, that the student has completed half of the academic coursework in the loan period.

(ii) For purposes of this paragraph, terms in a loan period are substantially equal in length if no term in the loan period is more than two weeks longer than any other term in that loan period.

* * * * *

PART 690—FEDERAL PELL GRANT PROGRAM

24. The authority citation for part 690 continues to read as follows:

Authority: 20 U.S.C. 1070a, unless otherwise noted.

§ 690.9 [Removed]

25. Section 690.9 is removed.

§ 690.75 [Amended]

26. Section 690.75 is amended by removing the words ''financial aid transcript'' in paragraph (a); and by removing the reference to ''34 CFR 668.7'' in paragraph (a)(1) and adding, in its place, ''34 CFR part 668, subpart C''.

[FR Doc. 00–20207 Filed 8–9–00; 8:45 am]

BILLING CODE 4000–01–U

Federal Register

Thursday,
August 10, 2000

Part V

Department of Health and Human Services

Administration for Children and Families

Request for Applications for the Office of Community Services' Fiscal Year 2001 Job Opportunities for Low-Income Individuals Program; Notice

DEPARTMENT OF HEALTH AND HUMAN SERVICES

Administration for Children and Families

[Program Announcement No. OCS–2001–02]

Request for Applications for the Office of Community Services' Fiscal Year 2001 Job Opportunities for Low-Income Individuals Program

AGENCY: Office of Community Services, Administration for Children and Families, Department of Health and Human Services.

ACTION: Announcement of availability of funds and request for applications under the Office of Community Services' FY 2001 Job Opportunities for Low-Income Individuals (JOLI) Program.

SUMMARY: The Administration for Children and Families (ACF), Office of Community Services (OCS), announces that, based on availability of funds, competing applications will be accepted for new grants pursuant to the Secretary's discretionary authority under section 505 of the Family Support Act of 1988, as amended.

Closing Date

To be considered for funding, applications must be *postmarked* on or before November 14, 2000. Detailed application submission instructions including the addresses to which applications must be submitted are found in Part V–B, Application Submission.

FOR FURTHER INFORMATION CONTACT: Administration for Children and Families, Office of Community Services, 370 L'Enfant Promenade SW., Washington, DC 20447. Contact: Nolan Lewis, (202) 401–5282; Carolalene Giles, (202) 401–5261; Aleatha Slade, (202) 401–5317.

In addition, this announcement is accessible on the OCS Website for reading or downloading at: www.acf.dhhs.gov/programs/ocs/kits1.htm.

If this Program Announcement is not available at these sources, it may be obtained by telephoning or writing the office listed under **FOR FURTHER INFORMATION CONTACT** above.

The Catalog of Federal Domestic Assistance number for this program is ''93.593''. The title is ''Job Opportunities for Low-Income Individuals Program''.

Table of Contents

Part I—Preamble

A. Legislative Authority
B. Definitions of Terms
C. Purpose

Part II—Background Information and Program Requirements

A. Eligible Applicants
B. Project and Budget Periods
C. Availability of Funds and Grant Amounts
D. Mobilization of Resources
E. Program Participants/Beneficiaries
F. Prohibition and Restrictions on the Use of Funds
G. Multiple Submittals
H. Re-Funding
I. Sub-Contracting or Delegating Projects
J. Maintenance of Effort

Part III—Application Requirements and Priority Areas

A. Program Focus
B. Creation of Jobs and Employment Opportunities
C. Cooperative Partnership Agreement with the Designated Agency Responsible for the Temporary Assistance for Needy Families (TANF) Program
D. Third Party Project Evaluation
E. Economic Development Strategy
F. Training and Support for Micro-Business Development
G. Support for Noncustodial Parents
H. Technical Assistance to Employers
I. Applicant Experience and Cost-per-Job
J. Loan Funds
K. Business Plan
L. Dissemination of Project Results
M. General Projects 1.0 and Community Development Corporations Set-Aside 2.0
N. Third Party Agreements

Part IV—Application Elements and Review Criteria

Part V—Application Procedures

A. Availability of Forms
B. Application Submission
C. Paperwork Reduction Act of 1995
D. Intergovernmental Review
E. Application Consideration
F. Criteria for Screening Applications

Part VI—Instructions for Completion of the SF–424

A. SF–424—Application for Federal Assistance
B. SF–424A—Budget Information—Non-Construction Programs
C. SF–424B—Assurances for Non-Construction

Part VII—Contents of Application and Receipt Process

A. Contents of Application
B. Application Format
C. Acknowledgment of Receipt

Part VIII—Post Award Information and Reporting Requirements

A. Notification of Grant Award
B. Attendance at Evaluation Workshops
C. Reporting Requirements
D. Audit Requirements
E. Prohibitions and Requirements with Regard to Lobbying
F. Applicable Federal Regulations

Part I—Preamble

A. Legislative Authority

Section 505 of the Family Support Act of 1988, Public Law 100–485, as amended, authorizes the Secretary of HHS to enter into agreements with nonprofit organizations (including community development corporations) for the purpose of conducting projects designed to create employment opportunities for certain low-income individuals.

B. Definitions of Terms

For purposes of this Program Announcement, the following definitions apply:

- *Budget period:* The interval of time into which a multi-year period of assistance (project period) is divided for budgetary and funding purposes.
- *Community-level data:* Key information to be collected by each grantee that will allow for a national-level analysis of common features of JOLI projects. This consists of data on the population of the target area, including the percentage of Temporary Assistance for Needy Families (TANF) recipients and others on public assistance, and the percentage whose incomes fall below the poverty line; the unemployment rate; the number of new business starts and business closings; and a description of the major employers and average wage rates and employment opportunities with those employers.
- *Community development corporation:* A private, nonprofit entity, governed by a board of directors consisting of residents of the community and business and civic leaders, that has as a principal purpose planning, developing, or managing low-income housing or community development projects.
- *Hypothesis:* An assumption made in order to test its validity. It should assert a cause-and-effect relationship between a program intervention and its expected result. Both the intervention and result must be measured in order to confirm the hypothesis. For example, the following is a hypothesis: ''Eighty hours of classroom training in small business planning will be sufficient for participants to prepare a successful loan application.'' In this example, data would be obtained on the number of hours of training actually received by participants (the intervention), and the quality of loan applications (the result), to determine the validity of the hypothesis (that eighty hours of training is sufficient to produce the result).
- *Intervention:* Any planned activity within a project that is intended to

produce changes in the target population and/or the environment and that can be formally evaluated. For example, assistance in the preparation of a business plan and loan package are planned interventions.

• *Job creation:* To bring about, by activities and services funded under this program, new jobs, that is, jobs that were not in existence before the start of the project. These activities can include self-employment/micro-enterprise training, the development of new business ventures or the expansion of existing businesses.

• *Nonprofit organization:* Any organization (including a community development corporation) exempt from taxation under section 501(a) of the Internal Revenue Code of 1986 by reason of paragraph (3) or (4) of section 501(c) of such Code.

• *Non-traditional employment for women or minorities:* Employment in an industry or field where women or minorities currently make up less than twenty-five percent of the work force.

• *Outcome evaluation:* An assessment of project results as measured by collected data which define the net effects of the interventions applied in the project. An outcome evaluation will produce and interpret findings related to whether the interventions produced desirable changes and their potential for replicability. It should answer the question: Did this program work?

• *Private employers:* Third party nonprofit organizations or third party for-profit businesses operating or proposing to operate in the same community as the applicant and which are proposed or potential employers of project participants.

• *Process evaluation:* The ongoing examination of the implementation of a program. It focuses on the effectiveness and efficiency of the program's activities and interventions (for example, methods of recruiting participants, quality of training activities, or usefulness of follow-up procedures). It should answer questions such as: Who is receiving what services and are the services being delivered as planned? It is also known as formative evaluation because it gathers information that can be used as a management tool to improve the way a program operates while the program is in progress. It should also identify problems that occurred and how they were dealt with and recommend improved means of future implementation. It should answer the question: ''How was the program carried out?'' In concert with the outcome evaluation, it should also help explain, ''Why did this program work/not work?'' and ''What worked and what did not?''

• *Program participant/beneficiary:* An individual eligible to receive Temporary Assistance for Needy Families (TANF) under Title I of the Personal Responsibility and Work Opportunity Reconciliation Act of 1996 (Part A of Title IV of the Social Security Act) and any other individual whose income level does not exceed 100 percent of the official poverty line as found in the most recent revision of the Poverty Income Guidelines published by the Department of Health and Human Services. (See Attachment A.)

• *Project period:* The total time a project is approved for support, including any extensions.

• *Self-sufficiency:* A condition where an individual or family, by reason of employment, does not need and is not eligible for public assistance.

• *Third party:* Any individual, organization, or business entity that is not the direct recipient of grant funds.

• *Third party agreement:* A written agreement entered into by the grantee and an organization, individual or business entity (including a wholly-owned subsidiary), by which the grantee makes an equity investment or a loan in support of grant purposes.

• *Third party in-kind contributions:* The value of non-cash contributions provided by non-federal third parties which may be in the form of real property, equipment, supplies and other expendable property, and the value of goods and services directly benefitting and specifically identifiable to the project or program.

C. Purpose

The purpose of this program is to conduct projects to create new employment and business opportunities for certain low-income individuals through the provision of technical and financial assistance to private employers in the community, self-employment/micro-enterprise programs, and/or new business development programs.

Part II—Background Information and Program Requirements

A. Eligible Applicants

Organizations eligible to apply for funding under this program are nonprofit organizations (including community development corporations) that are exempt from taxation under Section 501(a) of the Internal Revenue Code of 1986 by reason of paragraph (3) or (4) of Section 501(c) of such Code. Applicants must provide documentation of their tax exempt status. The applicant can accomplish this by providing a copy of the applicant's listing in the Internal Revenue Service's (IRS) most recent list of tax-exempt organizations described in Section 501(c)(3) of the IRS Code *or* by providing a copy of the currently valid IRS tax exemption certificate. Failure to provide evidence of Section 501(c)(3) or (4) tax exempt status will result in rejection of the application.

B. Project and Budget Periods

The Personal Responsibility and Work Opportunity Reconciliation Act of 1996, Public Law 104–193, reauthorized and modified section 505 of the Family Support Act of 1988, the JOLI authorizing legislation. Among the modifications effected was the deletion of sub-section (e) that had legislatively-mandated project duration. Applicants are therefore free to apply for projects of from one to three years duration, depending on the proposed work program and the applicant's assessment of the time required to achieve the proposed project goals.

OCS has made the programmatic determination that the nature of job creation and career development projects which meet the funding criteria set forth in this announcement is such that it is not feasible to divide funding into 12-month increments, and that completion of the entire project is in each case necessary to achieve the purposes of the JOLI program. Consequently, budget periods for grants under this announcement may be up to three years.

C. Availability of Funds and Grant Amounts

All grant awards are subject to the availability of appropriated funds. It is anticipated that approximately $5,500,000 will be available in FY 2001 for JOLI. OCS estimates that approximately $5,000,000 will be available for new grants and the remaining $500,000 will be set aside for the national evaluation contract for this program.

The 1996 amendments to the JOLI authorizing legislation also deleted the limitation on the number of grants to be made in any one fiscal year. Thus, the Office of Community Services expects to award up to 10 new grants in FY 2001, based on the amounts requested and contingent on the availability of funds. Given the limited funds available for the JOLI program, applicants should make a realistic assessment of the time and funds needed to achieve the goals set forth in their proposal, and design a work program and budget accordingly. The grant request should be for an amount needed, up to a maximum of $500,000, to implement that part of the

project plan supported by OCS funds, taking into consideration other cash and in-kind resources mobilized by the applicant in support of the proposed project. (See Paragraph D, below, Mobilization of Resources, and Part IV, Element VI: Budget Appropriateness and Reasonableness.)

In summary, grants of up to $500,000 in OCS funds for project periods and budget periods of up to three years will be awarded to selected organizations under this program in FY 2001.

D. Mobilization of Resources

OCS will give favorable consideration in the review process to applicants who mobilize cash and/or third party in-kind contributions for direct use in the project. The firm commitment of these resources must be documented and submitted with the application in order to be given credit in the review process under the Public-Private Partnerships project element (Part IV, Element V). Except in unusual situations, this documentation must be in the form of letters of commitment from the organization(s)/individual(s) from which resources will be received. Even though there is no matching requirement for the JOLI Program, grantees will be held accountable for any match, cash or in-kind contribution proposed or pledged as part of an approved application. (See Part IV, Element V, and Part VI, Instructions for Completing the SF–424, Section C, Non-Federal Resources.)

E. Program Participants/Beneficiaries

A low-income individual eligible to participate in a project conducted under this program is any individual eligible to receive Temporary Assistance for Needy Families (TANF) under a State program funded under Part A of Title IV of the Social Security Act or any other individual whose income level does not exceed 100 percent of the official poverty line. Within these categories, emphasis should be on individuals who are receiving TANF or its equivalent under State auspices; those who are unemployed; those residing in public housing or receiving housing assistance; non-custodial parents, and those who are homeless.

Attachment A to this announcement is an excerpt from the guidelines currently in effect. Annual revisions of these guidelines are normally published in the **Federal Register** in February or early March of each year. Grantees will be required to apply the most recent guidelines throughout the project period. These revised guidelines also may be obtained at public libraries, Congressional offices, or by writing the Superintendent of Documents, U.S. Government Printing Office, Washington, DC 20402.

No other government agency or privately-defined poverty guidelines are applicable for the determination of low-income eligibility for this program.

F. Prohibition and Restrictions on the Use of Funds

The use of funds for new construction or the purchase of real property is prohibited. Costs incurred for the rearrangement and alteration of facilities required specifically for the grant program are allowable when specifically approved in advance by ACF in writing.

If the applicant is proposing a project which will affect a property listed in, or is eligible for inclusion in, the National Register of Historic Places, it must identify this property in the narrative and explain how it has complied with the provisions of Section 106 of the National Historic Preservation Act of 1966 as amended. If there is any question as to whether the property is listed in, or is eligible for inclusion in, the National Register of Historic Places, the applicant should consult with the State Historic Preservation Officer. (See Attachment D: SF–424B, Item 13 for additional guidelines.) The applicant should contact OCS early in the development of its application for instructions regarding compliance with the Act and data required to be submitted to the Department of Health and Human Services. Failure to comply with the cited Act will result in the application being ineligible for funding consideration.

G. Multiple Submittals

Due to the limited amount of funds available under this program, only a single proposal from any one eligible applicant will be funded by OCS from FY 2001 JOLI funds pursuant to this announcement.

H. Re-Funding

OCS will not provide funding to a previously funded grantee to carry out the same work plan in the same target area.

I. Sub-Contracting or Delegating Projects

An applicant will not be funded where the proposal indicates that the applicant if funded will serve as a straw-party, that is, act as a mere conduit of funds to a third party without performing a substantive role itself. This prohibition does not bar sub-contracting or sub-awarding for specific services or activities needed to conduct the project.

J. Maintenance of Effort

The application must include an assurance that activities funded under this Program Announcement are in addition to, and not in substitution for, activities previously carried out without Federal assistance. (See Part VII, section A.8 and Attachment M.)

Part III—Application Requirements and Priority Areas

A. Program Focus

The Congressional Conference Report on the 1992 appropriations for the Department of Labor, Health and Human Services, and Education and related agencies directed the ACF to require economic development strategies as part of the application process to ensure that highly qualified organizations participate in the program. [H.R. Conf. Rep. No. 282, 102nd Cong., 1st Sess. 39 (1991)]

Priority will be given to applicants proposing to serve those areas containing the highest percentage of individuals receiving Temporary Assistance to Needy Families (TANF) under a State program funded under Title IV of the Social Security Act.

While projected employment in future years may be included in the application, it is essential that the focus of the project concentrate on the creation of new full-time, permanent jobs and/or new business development opportunities for TANF recipients and other low-income individuals during the duration of the grant project period. OCS is particularly interested in receiving innovative proposals that grow out of the experience and creativity of applicants and the needs of their clientele and communities.

Applicants should include strategies which seek to integrate projects financed and jobs created under this program into a larger effort of broad community revitalization which will promote job and business opportunities for eligible program participants and impact the overall economic environment.

OCS will only fund projects that create new employment and/or business opportunities for eligible program participants. That is, new, full-time permanent jobs through the expansion of a pre-identified business or new business development, or by providing opportunities for self-employment. In addition, projects should enhance the participants' capacities, abilities and skills and thus contribute to their progress toward self-sufficiency.

With national welfare reform a reality, and many States implementing ''welfare-to-work'' programs, the need

for well-paying jobs with career potential for TANF recipients becomes ever more pressing. In this context, the role of JOLI as a vehicle for exploring new and promising areas of employment opportunity for the poor is more important than ever.

Within the JOLI Program framework of job creation through new or expanding businesses or self-employment, OCS would welcome proposals offering business or career opportunities to eligible participants in a variety of fields. For instance, these might include day care and transportation, which are not only opportunities for employment, but when not available can be serious barriers to employment for TANF recipients; environmental justice initiatives involving activities such as toxic waste clean-up, water quality management, or Brownfields remediation; health-related jobs such as home health aides or medical support services; and non-traditional jobs for women and minorities.

B. Creation of Jobs and Employment Opportunities

The requirement for creation of new, full-time permanent employment opportunities (jobs) applies to all applications. OCS has determined that the creation of non-traditional job opportunities for women or minorities in industries or activities where they currently make up less than twenty-five percent of the work force meets the requirements of the JOLI legislation for the creation of new employment opportunities. OCS continues to solicit other JOLI applications that propose the creation of jobs through the expansion of existing businesses, the development of new businesses, or the creation of employment opportunities through self-employment/micro-enterprise development.

Proposed projects must show that the jobs and/or business/self employment opportunities to be created under this program will contribute to achieving self-sufficiency among the target population. The employment opportunities should provide hourly wages that exceed the minimum wage and also provide benefits such as health insurance, child care, and career development opportunities.

C. Cooperative Partnership Agreement With the Designated Agency Responsible for the Temporary Assistance for Needy Families (TANF) Program

A formal, cooperative relationship between the applicant and the designated State agency responsible for administering the Temporary Assistance for Needy Families (TANF) program (as provided for under Part A of Title IV of the Social Security Act) in the area served by the project is a requirement for funding. The application must include a signed, written agreement between the applicant and the designated State agency responsible for administering the TANF program, or a letter of commitment to such an agreement within 6 months of a grant award (contingent only on receipt of OCS funds). The agreement must describe the cooperative relationship, including specific activities and/or actions each of these entities propose to carry out over the course of the grant period in support of the project.

The agreement, at a minimum, must cover the specific services and activities that will be provided to the target population. (See Attachment I for a list of the State Human Services Administrators administering TANF.)

D. Third Party Project Evaluation

Proposals must include provision for an independent, methodologically sound evaluation of the effectiveness of the activities carried out with the grant and their efficacy in creating new jobs and business opportunities. There must be a well-defined process evaluation, and an outcome evaluation whose design will permit tracking of project participants throughout the proposed project period. The evaluation must be conducted by an independent evaluator, *i.e.,* a person with recognized evaluation skills who is organizationally distinct from, and not under the control of, the applicant. It is important that each successful applicant have a third party evaluator selected and performing at the very latest by the time the work program of the project is begun, and if possible before that time, so that he or she can participate in the final design of the program in order to assure that data necessary for the evaluation will be collected and available.

E. Economic Development Strategy

As noted in A. above, the Congress, in the Conference Report on the FY 1992 appropriation, directed ACF to require economic development strategies as part of the application process for JOLI to ensure that highly qualified organizations participate in the program. Accordingly, applicants must include in their proposal an explanation of how the proposed project is integrated with and supports a larger economic development strategy within the target community. Where appropriate, applicants should document how they were involved in the preparation and planned implementation of a comprehensive community-based strategic plan, such as that required for applying for Empowerment Zone/Enterprise Community (EZ/EC) status, to achieve both economic and human development in an integrated manner, and how the proposed project supports the goals of that plan. [See Part IV, Sub-Element III(b).]

F. Training and Support for Micro-Business Development

In the case of proposals for creating self-employment micro-business opportunities for eligible participants, the applicant must detail how it will provide training and support services to potential entrepreneurs. The assistance to be provided to potential entrepreneurs must include, at a minimum: (1) Technical assistance in basic business planning and management concepts; (2) assistance in preparing a business plan and loan application; and (3) access to business loans.

G. Support for Noncustodial Parents

The Office of Community Services and the Office of Child Support Enforcement, both part of the Administration for Children and Families, signed a Memorandum of Understanding (MOU) to foster and enhance partnerships between OCS grantees and local Child Support Enforcement (CSE) agencies. (See Attachment N for the list of CSE State Offices that can identify local CSE agencies.) In the words of the MOU:

> The purpose of these partnerships will be to develop and implement innovative strategies in States and local communities to increase the capability of low-income parents and families to fulfill their parental responsibilities. Too many low-income parents are without jobs or resources needed to support their children. A particular focus of these partnerships will be to assist low-income, non-custodial parents of children receiving Temporary Assistance for Needy Families to achieve a degree of self-sufficiency that will enable them to provide support that will free their families of the need for such assistance.

Accordingly, a rating factor and a review criterion have been included in this Program Announcement that will award two points to applicants who have entered into partnership agreements with their local CSE agency to provide for referrals to their project in accordance with provisions of the OCS-OCSE MOU. [See Part IV, Sub-Element III(c).]

H. Technical Assistance to Employers

Technical assistance should be specifically addressed to the needs of the private employer in creating new jobs to be filled by eligible individuals and/or to the individuals themselves in areas such as job-readiness, literacy and other basic skills training, job preparation, self-esteem building, etc. Financial assistance may be provided to the private employer as well as to the individual.

If the technical and/or financial assistance is to be provided to pre-identified businesses that will be expanded or franchised, written commitments from the businesses to create the planned jobs must be included with the application.

I. Applicant Experience and Cost-per-Job

In the review process, favorable consideration will be given to applicants with a demonstrated record of achievement in promoting job and enterprise opportunities for low-income people.

Favorable consideration also will be given to those applicants who show the lowest cost-per-job created for low-income individuals. For this program, OCS views $15,000 in OCS funds as the maximum amount for the creation of a job and, unless there are extenuating circumstances, will not fund projects where the cost-per-job in OCS funds exceeds this amount. Only those jobs created and filled by low-income people will be counted in the cost-per-job formula. [See Part IV, Sub-Element III (d).]

J. Loan Funds

The creation of a revolving loan fund with funds received under this program is an allowable activity. However, OCS encourages the use of funds from other sources for this purpose. Loans made to eligible beneficiaries for business development activities must be at or below market rate. (Note: Interest accrued on revolving loan funds may be used to continue or expand the activities of the approved project.)

K. Business Plan

Where applicant is proposing the development and startup of a new business or the expansion of an existing business, a business plan that follows the outline in Attachment L to this announcement must be submitted as an appendix to the proposal.

L. Dissemination of Project Results

Applications should include a plan for disseminating the results of the project after expiration of the grant period. Applicants may budget up to $2,000 for dissemination purposes. Final project reports should include a description of dissemination activities with copies of any materials produced.

M. General Projects 1.0 and Community Development Corporations Set-Aside 2.0

All grant awards are subject to the availability of appropriated funds. The Office of Community Services expects to award approximately $5 million in FY 2001 for new grants in two priority areas under this announcement: approximately $4 million for General Projects 1.0, and up to $1 million for projects to be conducted by community development corporations (CDC Set-Aside 2.0). (For definition of community development corporation, see Part I, Section B.)

The same purposes, requirements and prohibitions are applicable to proposals submitted under both General Projects 1.0 and Community Development Corporations Set-Aside 2.0. Applications for the set-aside funds that are not funded due to the limited amount of funds available will also be considered competitively within the larger pool of eligible applicants.

N. Third Party Agreements

Any applicant submitting a proposal for funding who proposes to use some or all of the requested OCS funds to enter into a third party agreement in order to make an equity investment (such as the purchase of stock) or a loan to an organization, or business entity (including a wholly-owned subsidiary), must include in the application, along with the business plan, a copy of the signed third party agreement for approval by OCS.

• A third party agreement covering an equity investment must contain, at a minimum, the following:

1. The type of equity transaction (*e.g.* stock purchase);
2. Purpose(s) for which the equity investment is being made;
3. Cost per share;
4. Number of shares being purchased;
5. Percentage of ownership of the business; and
6. Number of seats on the board, if applicable.

• A third party agreement covering a loan transaction must contain, at a minimum, the following information:

1. Purpose(s) for which the loan is being made;
2. Rates of interest and other fees;
3. Terms of loan;
4. Repayment schedules;
5. Collateral security; and
6. Default and collection procedures.

• All third party agreements must include written commitments as follows:

From the third party (as appropriate):

1. A minimum of 75% of the jobs to be created as a result of the injection of grant funds will be filled by low-income individuals;
2. The grantee will have the right to screen applicants for jobs to be filled by low-income individuals and to verify their eligibility;
3. If the grantee's equity investment equals 25% or more of the business's assets, the grantee will have representation on the board of directors;
4. Reports will be made to the grantee regarding the use of grant funds no less than on a quarterly basis;
5. A procedure will be developed to assure that there are no duplicate counts of jobs created; and
6. Detailed information will be provided on how the grant funds will be used by the third party by submitting a Source and Use of Funds Statement. In addition, the agreement must provide details on how the grantee will provide support and technical assistance to the third party in areas of recruitment and retention of low-income individuals.

From the grantee:

Detailed information on how the grantee will provide support and technical assistance to the third party in areas of recruitment and retention of low-income individuals.

• All third party agreements should be accompanied by:

1. A signed statement from a Certified or Licensed Public Accountant as to the sufficiency of the third party's financial management system in accordance with 45 CFR 74, to protect adequately any federal funds awarded under the application;
2. Financial statements for the third party organization for the prior three years. (If not available because the organization is a newly-formed entity, include a statement to this effect.); and
3. The third party agreement will specify how the grantee will provide oversight of the third party for the life of the agreement. Also, the agreement will specify that the third party will maintain documentation related to the expenditure of grant funds loaned to or invested in the third party and grant objectives as specified in the agreement and will provide the grantee and HHS access to that documentation.

If a signed third party agreement is not available when the application is submitted, the applicant must submit as part of the narrative as much of the above-mentioned information as possible in order to enable reviewers to evaluate the proposal. It should be

noted that that portion of a grant which will be used to fund a third party agreement will not be released until the agreement has been approved by OCS.

Part IV—Application Elements and Review Criteria

Applications that pass the pre-rating review will be assessed and scored by reviewers. Each reviewer will give a numerical score for each application reviewed. These numerical scores will be supported by explanatory statements on a formal rating form describing major strengths and weaknesses under each applicable criterion published in the announcement.

The in-depth assessment and review process will use the following criteria coupled with the specific requirements described in Part III. Scoring will be based on a total of 100 points.

The ultimate goals of the project to be funded under the JOLI Program are: (1) To achieve, through project activities and interventions, the creation of employment opportunities for TANF recipients and other low-income individuals which can lead to economic self-sufficiency of members of the communities served; (2) to evaluate the effectiveness of these interventions and of the project design through which they were implemented; and (3) thus to make possible the replication of successful programs.

In order to simplify the application preparation and review process, OCS seeks proposals that are cogent and brief. Applications with project narratives (excluding appendices) of more than 30 letter-sized pages of 12 characters per inch (cpi) type or equivalent on a single side will not be reviewed for funding.

Applicants should prepare and assemble their project description using the following outline of required project elements. They should, furthermore, build their project concept, plans, and application description upon the guidelines set forth for each of the project elements.

For each of the project elements or sub-elements below, there is at the end of the discussion a suggested number of pages to be devoted to the particular element or sub-element. These are suggestions only; but the applicant must remember that the overall Project Narrative cannot be longer than 30 pages.

The competitive review of proposals will be based on the degree to which applicants incorporate each of the elements and sub-elements below into their proposals, so as to:

(1) Describe convincingly a project that will develop new employment or business opportunities for TANF recipients and other low income individuals that can lead to a transition from dependency to economic self-sufficiency;

(2) Propose a realistic budget and timeframe for the project that will support the successful implementation of the work plan to achieve the project's goals in a timely and cost effective manner; and

(3) Provide for the testing and evaluation of the project design, implementation, and outcomes so as to make possible replication of a successful program.

Element I—Organizational Experience in Program Area and Staff Skills, Resources and Responsibilities

Sub-Element I(a)—Agency's Experience and Commitment in Program Area (Weight of 0–10 Points in Proposal Review)

Applicants should cite their organization's capability and relevant experience in developing and operating programs which deal with poverty problems similar to those to be addressed by the proposed project. They should also cite the organization's experience in collaborative programming and operations which involve evaluations and data collection. Applicants should identify agency executive leadership in this section and briefly describe their involvement in the proposed project and provide assurance of their commitment to its successful implementation.

The application should include documentation that briefly summarizes two similar projects undertaken by the applicant agency and the extent to which the stated and achieved performance targets, including permanent benefits to low-income populations, have been achieved. The application should note and justify the priority that this project will have within the agency, including the facilities and resources that it has available to carry it out.

It is suggested that applicants use no more than 2 pages for this sub-element.

Note: The maximum number of points will be given only to those organizations with a demonstrated record of achievement in promoting job creation and enterprise opportunities for low-income people.

Sub-Element I(b)—Staff Skills, Resources and Responsibilities (Weight of 0–10 Points in Proposal Review)

The application must identify the two or three individuals who will have the key responsibility for managing the project, coordinating services and activities for participants and partners, and for achieving performance targets. The focus should be on the qualifications, experience, capacity and commitment to the program of the executive officials of the organization and the key staff persons who will administer and implement the project. The person identified as project director should have supervisory experience, experience in finance and business, and experience with the target population. Because this is a new project within an already-established agency, OCS expects that the key staff person(s) would be identified, if not hired.

The application must also include a resume of the third party evaluator, if identified or hired; or the minimum qualifications and position description for the third party evaluator, who must be a person with recognized evaluation skills who is organizationally distinct from, and not under the control of, the applicant. (See Element IV: Project Evaluation, below, for fuller discussion of evaluator qualifications.)

Actual resumes of key staff and position descriptions should be included in an appendix to the proposal.

It is suggested that applicants use no more than 3 pages for this sub-element.

Element II: Project Theory, Design, and Plan

OCS seeks to learn from the application why and how the project as proposed is expected to lead to the creation of new employment opportunities for low-income individuals, which can lead to significant improvements in individual and family self-sufficiency.

Applicants are urged to design and present their project in terms of a conceptual cause-effect framework. In the following paragraphs, a framework is described that suggests a way to present a project so as to show the logic of the cause-effect relations between project activities and project results. Applicants are not required to use the exact language described; but it is important to present the project in a way that makes clear the cause-effect relationship between what the project plans to do and the results it expects to achieve.

Sub-Element II(a)—Description of Target Population, Analysis of Need, and Project Assumptions (Weight of 0–10 Points in Application Review)

The project design or plan should begin with identifying the underlying assumptions about the program. These are the beliefs on which the proposed program is built. These assumptions

include: the needs of the population to be served; the current services available to that population, and where and how they fail to meet their needs; why the proposed services or interventions are appropriate and will meet those needs; and the impact the proposed interventions will have on the project participants.

In other words, the underlying assumptions of the program are the applicant's analysis of the needs and problems to be addressed by the project, and the applicant's theory of how its proposed interventions will address those needs and problems to achieve the desired result. Thus a strong application is based upon a clear description of the needs and problems to be addressed and a persuasive understanding of the causes of those problems.

In this sub-element of the proposal, the applicant must precisely identify the target population to be served. The geographic area to be impacted should then be described briefly, citing the percentage of residents who are low-income individuals and TANF recipients, as well as the unemployment rate and other data that are relevant to the project design.

The application should include an analysis of the identified personal barriers to employment, job retention and greater self-sufficiency faced by the population to be targeted by the project. (These might include such problems as illiteracy, substance abuse, family violence, lack of skills training, health or medical problems, need for childcare, lack of suitable clothing or equipment, or poor self-image.)

The application should also include an analysis of the identified community systemic barriers which the project will seek to overcome. These might include lack of jobs (high unemployment rate); lack of public transportation; lack of markets; unavailability of financing, insurance or bonding; inadequate social services (employment service, childcare, job training); high incidence of crime; inadequate health care; or environmental hazards (such as toxic dumpsites or leaking underground tanks).

Applicants should be sure not to overlook the personal and family services and support that might be needed by project participants *after* they are on the job which will enhance job retention and advancement.

If the jobs to be created by the proposed project are themselves designed to fill one or more of the needs, or remove one or more of the barriers so identified, this fact should be highlighted in the discussion, *e.g.*, jobs in child care, health care, or transportation.

It is suggested that applicants use no more than 4 pages for this sub-element.

Sub-Element II(b)—Project Strategy and Design: Interventions, Outcomes, and Goals (Weight of 0–10 Points in Proposal Review)

The work plan must describe the proposed project activities, or interventions, and explain how they are expected to result in outcomes which will meet the needs of the program participants and assist them to overcome the identified personal and systemic barriers to employment, job retention, and self-sufficiency. In other words, what will the project staff do with the resources provided to the project and how will what they do (interventions) assist in creating and sustaining employment and business opportunities for program participants in the face of the needs and problems that have been identified.

The underlying assumptions concerning client needs and the theory of how they can be effectively addressed, which are discussed above, lead in the project design to the conduct of a variety of project activities or interventions, each of which is assumed to result in immediate changes, or outcomes.

The immediate changes lead to intermediate outcomes; and the intermediate outcomes lead to the attainment of the final project goals.

The applicant should describe the major activities, or interventions, which are to be carried out to address the needs and problems identified in Sub-Element II(a); and should discuss the immediate changes, or outcomes, which are expected to result. These are the results expected from each service or intervention immediately after it is provided. For example, a job readiness training program might be expected to result in clients having increased knowledge of how to apply for a job, improved grooming for job interviews, and improved job interview skills; or business training and training in bookkeeping and accounting might be expected to result in project participants making an informed decision about whether they are suited for entrepreneurship.

At the next level are the intermediate outcomes, which result from these immediate changes. Often an intermediate project outcome is the result of several immediate changes resulting from a number of related interventions such as training and counseling. Intermediate outcomes should be expressed in measurable changes in knowledge, attitudes, behavior, or status/condition. In the above examples, the immediate changes achieved by the job readiness program, coupled with technical assistance to an employer in the expansion of a business, could be expected to lead to intermediate outcomes of creation of new job openings and in the participant applying for a job with the company. The acquisition of business skills, coupled with the establishment of a loan fund, could be expected to result in the actual decision by the participant to go into a particular business venture or seek the alternative track of pursuing job readiness and training.

Finally, the application should describe how the achievement of these intermediate outcomes will be expected to lead to the attainment of the project goals: employment in newly created jobs, new careers in non-traditional jobs, successful business ventures, or employment in an expanded business, depending on the project design. Applicants must remember that if the major focus of the project is to be the development and startup of a new business or the expansion of an existing business, then a business plan which follows the outline in Attachment L to this announcement must be submitted as an appendix to the proposal. (See Part III, K.)

Applicants do not have to use the exact terminology described above, but it is important to describe the project in a way that makes clear the expected cause-and-effect relationship between what the project plans to do: the activities or interventions, the changes that are expected to result, and how those changes will lead to attainment of the project goals of new employment opportunities and greater self-sufficiency. The competitive review of this sub-element will be based on the extent to which the application makes a convincing case that the activities to be undertaken will lead to the projected results.

It is suggested that applicants use no more than 4 pages for this sub-element.

Sub-Element II(c)—Work Plan (Weight of 0–10 Points in Proposal Review)

Once the project strategy and design framework is established, the applicant should present the highlights of a work plan for the project. The plan should explicitly tie into the project design framework and should be feasible, *i.e.*, capable of being accomplished with the resources, staff, and partners available. The plan should briefly describe the key project tasks and show the timelines and major milestones for their implementation. Critical issues or

potential problems that might affect the achievement of project objectives should be explicitly addressed, with an explanation of how they would be overcome, and how the objectives will be achieved notwithstanding any such problems. The plan should be presented in such a way that it can be correlated with the budget narrative included earlier in the application.

Applicants may be able to use a simple Gantt or time line chart to convey the work plan in minimal space.

The application contains a full and accurate description of the proposed use of the requested financial assistance.

If the applicant proposes to make an equity investment or a loan to an individual, organization, or business entity (including a wholly-owned subsidiary), the application must include: A signed third party agreement; a signed statement by a Certified or Licensed Public Accountant as to the sufficiency of the third party's financial management system; and financial statements for the third party's prior three years of operation. (If newly formed and unable to provide the information regarding the prior three years of operation, a statement to that effect should be included.) If the applicant states that an agreement is not currently in place, the application must contain in the narrative as much information required for third party agreements as is available.

Also, if the project proposes the development of a new or expanded business, service, physical or commercial activity, the application must address applicable elements of a business plan. Guidelines for a business plan are included in Attachment L.

Special attention should be given to assure that the financial plan element, which indicates the project's potential and timetable for financial self-sufficiency, is included. It must include for the applicant and the third party, if appropriate, the following exhibits for the first three years (on a quarterly basis) of the business' operations: Profit and Loss Forecasts, Cash Flow Projections, and Proforma Balance Sheets. Based on these documents, the application must also contain an analysis of the financial feasibility of the project. Also, a Source and Use of Funds statement for all project funding must be included.

It is suggested that applicants use no more than 3 pages for this sub-element.

Element III: Significant and Beneficial Impact

Sub-Element III (a)—Quality of Jobs/Business Opportunities (Weight of 0–10 Points in Proposal Review)

The proposed project is expected to produce permanent and measurable results that will reduce the incidence of poverty in the community and lead welfare recipients from welfare dependency toward economic self-sufficiency. Results are expected to be quantifiable in terms of the creation of permanent, full-time jobs; the development of business opportunities; the expansion of existing businesses; or the creation of non-traditional employment opportunities. In developing business opportunities and self employment for TANF recipients and low-income individuals, the applicant proposes, at a minimum, to provide basic business planning and management concepts, and assistance in preparing a business plan and loan package.

The application should document that:

The business opportunities to be developed for eligible participants will contribute significantly to their progress toward self-sufficiency; and/or jobs to be created for eligible participants will contribute significantly to their progress toward self-sufficiency. For example, they should provide salaries that exceed the minimum wage, plus benefits such as health insurance, child care and career development opportunities.

It is suggested that applicants use no more than 2 pages for this sub-element.

Sub-Element III(b)—Community Empowerment Consideration (Weight of 0–3 Points in Proposal Review)

Special consideration will be given to applicants that are located in areas that are characterized by conditions of extreme poverty and other indicators of socio-economic distress such as a poverty rate of at least 20%, designation as an Empowerment Zone or Enterprise Community, high levels of violence, gang activity or drug use; who document that in response to these conditions they have been involved in the preparation and planned implementation of a comprehensive community-based strategic plan to achieve both economic and human development in an integrated manner; and how the proposed project will support the goals of that plan.

It is suggested that applicants use no more than 2 pages for this sub-element.

Sub-Element III(c)—Support for Noncustodial Parents (Weight of 0–2 Points in Proposal Review)

Applicants that have entered into partnership agreements with local Child Support Enforcement Agencies to develop and implement innovative strategies to increase the capability of low-income parents and families to fulfill their parental responsibilities, and specifically, to this end, to provide for referrals to the funded projects of identified income eligible families and noncustodial parents economically unable to provide child support, will also receive special consideration.

To receive the full credit of two points, applicants should include as an appendix to the application, a signed letter of agreement with the local CSE Agency for referral of eligible non-custodial parents to the proposed project.

It is suggested that applicants use no more than 1 page for this sub-element.

Sub-Element III(d)—Cost-per-Job (Weight of 0–5 Points in Proposal Review)

The applicant should document that during the project period the proposed project will create new, permanent jobs through business opportunities or non-traditional employment opportunities for low-income residents at a cost-per-job below $15,000 in OCS funds. The cost per job should be calculated by dividing the total amount of grant funds requested (*e.g.*, $420,000) by the number of jobs to be created (*e.g.*, 60) which would equal the cost-per-job ($7,000). If any other calculations are used, include the methodology and rationale in this section. In making calculations of cost-per-job, only jobs filled by low-income project participants may be counted. (See Part III, Section I.)

Note: Except in those instances where independent reviewers identify extenuating circumstances related to business development activities, or high wage levels and living costs such as in Hawaii or Alaska, the maximum number of points will be given only to those applicants proposing cost-per-job created estimates of $5,000 or less of OCS requested funds. Higher cost-per-job estimates will receive correspondingly fewer points.

It is suggested that applicants use no more than 1 page for this sub-element.

Element IV: Project Evaluation (Weight of 0–15 Points in the Proposal Review)

Sound evaluations are essential to the JOLI Program. OCS requires applicants to include in their applications a well thought through outline of an evaluation plan for their project. The outline should explain how the applicant

proposes to answer the key questions about how effectively the project is being/was implemented; whether the project activities, or interventions, achieved the expected immediate outcomes, and why or why not (the process evaluation); and whether and to what extent the project achieved its stated goals, and why or why not (the outcome evaluation). Together, the process and outcome evaluations should answer the question: ''What did this program accomplish and why did it work/not work?''

Applicants are *not* being asked to submit a complete and final evaluation plan as part of their proposal, but they must include:

1. A well thought through outline of an evaluation plan that identifies the principal cause-and-effect relationships to be tested, and that demonstrates the applicant's understanding of the role and purpose of both process and outcome evaluations. (See previous paragraph.)
2. The identity and qualifications of the proposed third party evaluator, or if not selected, the qualifications which will be sought in choosing an evaluator, which must include successful experience in evaluating social service delivery programs, and the planning and/or evaluation of programs designed to foster self-sufficiency in low income populations; and
3. A commitment to the selection of a third party evaluator approved by OCS and completion of a final evaluation design and plan, in collaboration with the approved evaluator and the OCS evaluation technical assistance contractor during the six-month startup period of the project, if funded.

Applicants should ensure, above all, that the evaluation outline presented is consistent with their project design. A clear project framework of the type recommended earlier identifies the key project assumptions about the target populations and their needs, as well as the hypotheses, or expected cause-effect relationships to be tested in the project; and the proposed project activities, or interventions, that will address those needs in ways that will lead to the achievement of the project goals of self-sufficiency. It also identifies in advance the most important process and outcome measures that will be used to identify performance success and expected changes in individual participants, the grantee organization, and the community.

Finally, as noted above, the outline should provide for prompt reporting, concurrently with the semi-annual program progress reports, of lessons learned during the course of the project, so that they may be shared without waiting for the final evaluation report.

For all these reasons, it is important that each successful applicant have a third party evaluator selected and performing at the very latest by the time the work program of the project is begun, and if possible before that time so that he or she can participate in the final design of the program and assure that data necessary for the evaluation will be collected and available. Plans for selecting an evaluator should be included in the application narrative. A third party evaluator must have knowledge of and experience in conducting process and outcome evaluations in the job creation field, and have a thorough understanding of the range and complexity of the problems faced by the target population.

The competitive procurement regulations (45 CFR Part 74, sections 74.40–74.48, esp. 74.43) apply to service contracts such as those for evaluators.

It is suggested that applicants use no more than 3 pages for this element, plus the resume or position description for the evaluator, which should be in an appendix.

Element V: Public/Private Partnerships (Weight of 0–10 Points in the Proposal Review)

The proposal should briefly describe any public/private partnerships, which will contribute to the implementation of the project. Where partners' contributions to the project are a vital part of the project design and work program, the narrative should describe undertakings of the partners. A partnership agreement specifying the roles of the partners and making a clear commitment to the fulfilling of the partnership role must be included in an appendix to the proposal. The firm commitment of mobilized resources must be documented and submitted with the application in order to be given credit under this element. The application should meet the following criteria:

- Where other resources are mobilized, the application must provide documentation that public and/or private sources of cash and/or third party-in-kind contributions will be available in the form of letters of commitment from the organization(s)/individual(s) from which resources will be received. Applications that can document dollar for dollar contributions equal to the OCS funds and demonstrate that the partnership agreement clearly relates to the objectives of the proposed project will receive the maximum number of points for this criterion. Lesser contributions will be given consideration based upon the value documented.

Note: Even though there is no matching requirement for the JOLI Program, grantees will be held accountable for any match, cash or in-kind contribution proposed or pledged as part of an approved application. (See Part II, D—Mobilization of Resources.)

- Partners involved in the proposed project should be responsible for substantive project activities and services. Applicants should note that partnership relationships are not created via service delivery contracts.

It is suggested that applicants use no more than 4 pages for this element.

Element VI: Budget Appropriateness and Reasonableness (Weight of 0–5 Points in Proposal Review)

Applicants are required to submit Federal budget forms with their proposals to provide basic applicant and project information (SF 424) and information about how Federal and other project funds will be used (424A). (See Part VI.) Immediately following the completed Federal budget forms, (Attachments B and C), applicants must submit a budget narrative, or explanatory budget information which includes a detailed budget breakdown for each of the budget categories in the SF–424A. This budget narrative is not considered a part of the project narrative, and does not count as part of the thirty page limitation but rather should be included in the application following the budget forms.

The duration of the proposed project and the funds requested in the budget must be commensurate with the level of effort necessary to accomplish the goals and objectives of the project. The budget narrative should briefly explain how grant funds will be expended and show the appropriateness of the Federal funds and any mobilized resources to accomplish project purposes within the proposed timeframe. The estimated cost to the government of the project should be reasonable in relation to the project's duration and to the anticipated results, and include reasonable administrative costs if an indirect cost rate has not been negotiated with a cognizant Federal agency.

Applicants are encouraged to use job titles and not specific names in developing the budget. However, the specific salary rates or amounts for staff positions identified must be included in the application budget.

Resources in addition to OCS grant funds are encouraged both to augment project resources and strengthen the basis for continuing partnerships to benefit the target community. The amounts of such resources, their appropriateness to the project design, and the likelihood that they will continue beyond the project timeframe will be taken into account in judging the

application. As noted in Element V, above, even though there is no matching requirement for the JOLI Program, grantees will be held accountable for any match, cash or in-kind contribution proposed or pledged as part of an approved application.

Applicants should include funds in the project budget for travel by project directors and chief evaluators to attend two national evaluation workshops in Washington, D.C. (See Part VIII, B, Attendance at Evaluation Workshops.)

The score for this element will be based on the budget form (SF–424A) and the associated detailed budget narrative.

Part V—Application Procedures

A. Availability of Forms

Attachments B–F, H, J, and M contain all of the standard forms necessary for the application for awards under this OCS program. These attachments and Parts V and VI of this announcement contain all the instructions required for submittal of applications.

Additional copies may be obtained by writing or telephoning the office listed under the section entitled **FOR FURTHER INFORMATION CONTACT:** at the beginning of this announcement. In addition, this announcement is accessible on the Internet through the OCS web site for reading or downloading at the following address: www.acf.dhhs.gov/programs/ocs/kits1.htm.

The applicant must be aware that in signing and submitting the application for this award, it is certifying that it will comply with the Federal requirements covering the drug-free workplace, debarment regulations and the Certification Regarding Environmental Tobacco Smoke, set forth in Attachments E, F and J.

Part IV contains instructions for the substance and development of the project narrative. Part VII, Section A, describes the contents and format of the application as a whole.

B. Application Submission

Mailing Address: JOLI Applications should be mailed to the U.S. Department of Health and Human Services, Administration for Children and Families, Office of Grants Management/OCSE, 4th Floor West, Aerospace Center, 370 L'Enfant Promenade, SW., Washington, DC 20447; Attention: Application for JOLI Program.

Number of Copies Required: One signed original application and four copies should be submitted at the time of initial submission. (OMB–0970–0062, expiration date 10/31/2001)

Submission Instructions: Mailed applications shall be considered as meeting an announced deadline if they are either received on or before the deadline date or sent on or before the deadline date and received by ACF in time for the independent review.

Applications that are mailed must bear a legibly dated U.S. Postal Service postmark or a legibly dated, machine produced postmark of a commercial mail service affixed to the envelope/package containing the application(s). To be acceptable as proof of timely mailing, a postmark from a commercial mail service must include the logo/emblem of the commercial mail service company and must reflect the date the package was received by the commercial mail service company from the applicant. Private metered postmarks shall not be acceptable as proof of timely mailing. (Applicants are cautioned that express/overnight mail services do not always deliver as agreed.)

Applications that are hand carried by applicants, applicant couriers, or by other representatives of the applicant shall be considered as meeting an announced deadline if they are received on or before the closing date, between the hours of 8 a.m. and 4:30 p.m., EST, and at the U.S. Department of Health and Human Services, Administration for Children and Families, Office of Grants Management/OCSE, ACF Mailroom, 2nd Floor Loading Dock, Aerospace Center, 901 D Street, S.W., Washington, D.C. 20024, between Monday and Friday (excluding Federal holidays). The address must appear on the envelope/package containing the application with the note: Attention: Application for JOLI Program. (Applicants are again cautioned that express/overnight mail services do not always deliver as agreed.)

ACF cannot accommodate transmission of applications by fax or through other electronic media. Therefore, applications transmitted to ACF electronically will not be accepted regardless of date or time of submission and time of receipt.

Late Applications: Applications that do not meet the criteria above are considered late applications. ACF shall notify each late applicant that its application will not be considered in the current competition.

Extension of Deadlines: ACF may extend application deadlines when circumstances such as acts of God (flood, hurricanes, *etc.*) occur, or when there are widespread disruptions of the mail service. Determinations to extend or waive deadline requirements rest with ACF's Chief Grants Management Officer.

C. Paperwork Reduction Act of 1995

Under the Paperwork Reduction Act of 1995, Public Law 104–13, the Department is required to submit to OMB for review and approval any reporting and record keeping requirements in regulations, including Program Announcements. An agency may not conduct or sponsor, and a person is not required to respond to, a collection of information unless it displays a currently valid OMB control number. This Program Announcement does not contain information collection requirements beyond those approved for ACF grant announcements/applications under OMB Control Number OMB–0970–0062, expiration date 10/31/2001.

D. Intergovernmental Review

This program is covered under Executive Order 12372, ''Intergovernmental Review of Federal Programs,'' and 45 CFR Part 100, ''Intergovernmental Review of Department of Health and Human Services Program and Activities.'' Under the Order, States may design their own processes for reviewing and commenting on proposed Federal assistance under covered programs.

Note: State/Territory Participation in the Intergovernmental Review Process Does Not Signify Applicant Eligibility for Financial Assistance Under a Program. A Potential Applicant Must Meet the Eligibility Requirements of the Program for Which It Is Applying Prior to Submitting an Application to Its Single Point of Contact (SPOC), if Applicable, or to ACF.

As of October 5, 1999, the following jurisdictions have elected *not* to participate in the Executive Order process:

Alabama, Alaska, Colorado, Connecticut, Hawaii, Idaho, Kansas, Louisiana, Massachusetts, Minnesota, Montana, Nebraska, New Jersey, Ohio, Oklahoma, Oregon, Pennsylvania, South Dakota, Tennessee, Vermont, Virginia, Washington, American Samoa, and Palau.

Applicants from these 24 jurisdictions need take no action regarding E.O. 12372. Applicants for projects to be administered by Federally recognized Indian tribes are also exempt from the requirements of E.O. 12372. Otherwise, applicants should contact their SPOC as soon as possible to alert them of the prospective applications and receive any necessary instructions. Applicants must submit any required material to the SPOC as soon as possible so that the program office can obtain and review SPOC comments as part of the award

process. It is imperative that the applicant submit all required materials, if any, to the SPOC and indicate the date of this submittal (or the date of contact if no submittal is required) on the Standard Form 424, item 16a. Under 45 CFR 100.8(a)(2), a SPOC has sixty (60) days from the application deadline to comment on proposed new or competing continuation awards.

SPOCs are encouraged to eliminate the submission of routine endorsements as official recommendations. Additionally, SPOCs are requested to differentiate clearly between mere advisory comments and those official State process recommendations which may trigger the ''accommodate or explain'' rule.

When comments are submitted directly to ACF, they should be addressed to: Department of Health and Human Services, Administration for Children and Families, Office of Grants Management/OCSE, 4th Floor West, Aerospace Center, 370 L'Enfant Promenade, SW., Washington, DC 20447.

A list of the Single Point of Contact for each State and Territory is included as Attachment G to this announcement.

E. Application Consideration

Applications that meet the screening requirements below will be reviewed competitively. Such applications will be referred to reviewers for numerical scoring and explanatory comments based solely on responsiveness to the guidelines and evaluation criteria published in this announcement.

Applications will be reviewed by persons outside of the OCS unit. The results of these reviews will assist the Director and OCS program staff in considering competing applications. Reviewers' scores will weigh heavily in funding decisions, but will not be the only factors considered.

Applications generally will be considered in order of the average scores assigned by reviewers. However, highly ranked applications are not guaranteed funding since other factors are taken into consideration, including, but not limited to, the timely and proper completion of projects funded with OCS funds granted in the last five (5) years; comments of reviewers and government officials; staff evaluation and input; the amount and duration of the grant requested and the proposed project's consistency and harmony with OCS goals and policy; geographic distribution of applications; previous program performance of applicants; the limitations on project continuation or refunding (see Part II, Section H); the number of previous JOLI grants made to applicants; compliance with grant terms under previous HHS grants, including the actual dedication to program of mobilized resources as set forth in project applications; audit reports; investigative reports; and applicant's progress in resolving any final audit disallowances on previous OCS or other Federal agency grants.

OCS reserves the right to discuss applications with other Federal or non-Federal funding sources to verify the applicant's performance record and the documents submitted.

F. Criteria for Screening Applications

All applications that meet the published deadline requirements as provided in this Program Announcement will be screened for completeness and conformity with the requirements. Only complete applications that meet the requirements listed below will be reviewed and evaluated competitively. Other applications will be returned to the applicant with a notation that they were unacceptable and will not be reviewed.

The following requirements must be met by all applicants:

1. The application must contain a Standard Form 424 ''Application for Federal Assistance'' (SF–424), a budget (SF–424A), and signed ''Assurances'' (SF–424B) completed according to instructions published in Part VI and Attachments C and D of this Program Announcement.

2. All JOLI applications must include a signed cooperative partnership agreement with the designated State agency responsible for administering the TANF Program, or a letter of commitment to such an agreement within six months of a grant award, contingent only on receipt of OCS funds. This cooperative partnership agreement must fully describe the role and/or responsibilities of each partner for specific activities and/or services to be provided which must clearly relate to the objectives of the proposed project.

3. A project narrative must also accompany the standard forms. OCS requires that the narrative portion of the application be limited to 30 pages, typewritten on one side of the paper only with one-inch margins and type face no smaller than 12 characters per inch (cpi) or equivalent. The table of contents, budget narrative charts, appendices, exhibits, resumes, position descriptions, letters of support, cooperative agreements, letters of collaboration or substantive commitments to the project by organizations other than designated TANF agency, and business plans (where required) are not counted against this page limit. It Is Strongly Recommended That Applicants Follow the Format and Content for the Narrative Set Out In Part IV.

4. The SF–424 and the SF–424B must be signed by an official of the organization applying for the grant who has authority to obligate the organization legally. Applicants must also be aware that the applicant's legal name as required on the SF–424 (item 5) must match that listed as corresponding to the Employer Identification Number (item 6).

5. Application must contain documentation of the applicant's tax exempt status as required under Part II, section A.

6. The application must contain a written third party agreement, or a discussion of a proposed agreement, signed by the applicant and the third party that includes all of the elements required in Part III, section N, if the applicant proposes to make an equity investment or a loan.

Part VI—Instructions for Completing the SF–424

(Approved by the Office of Management and Budget under Control Number 0970–0062, expiration date October 31, 2001.)

The standard forms attached to this announcement shall be used to apply for funds under this program announcement.

It is suggested that you reproduce single-sided copies of the SF–424 and SF–424A and type your application on the copies. Please prepare your application in accordance with instructions provided on the forms (Attachments B and C) as modified by the OCS specific instructions set forth below:

Provide line item detail and detailed calculations for each budget object class identified on the Budget Information form. Detailed calculations must include estimation methods, quantities, unit costs, and other similar quantitative detail sufficient for the calculation to be duplicated. The detailed budget must also include a breakout by the funding sources identified in Block 15 of the SF–424.

Provide a narrative budget justification, which describes how the categorical costs are derived. Discuss the necessity, reasonableness, and allocability of the proposed costs.

A. SF–424—Application for Federal Assistance (Attachment B)

Top of Page. Please enter the single priority area number under which the application is being submitted (General Projects 1.0 or CDC Set-Aside 2.0). An

application should be submitted under only one priority area.

Where the applicant is a previous Department of Health and Human Services grantee, enter the Central Registry System Employee Identification Number (CRS/EIN) and the Payment Identifying Number, if one has been assigned, in the Block entitled Federal Identifier located at the top right hand corner of the form.

Item 1. For the purposes of this announcement, all projects are considered Applications; there are no Preapplications.

Item 7. Enter N in the box and specify nonprofit corporation on the line marked Other.

Item 9. Name of Federal Agency—Enter HHS–ACF/OCS.

Item 10. The Catalog of Federal Domestic Assistance number for OCS programs covered under this announcement is *93.593*. The title is ''Job Opportunities for Low-Income Individuals Program''.

Item 11. In addition to a brief descriptive title of the project, indicate the priority area for which funds are being requested. Use the following letter designations:

JO—General Project
JS—Community Development Corporation Set-Aside

Item 13. ''Proposed Project''—The ending date should be based on the requested project period, not to exceed three years (36 months).

Item 15a. This amount should be no greater than $500,000.

Item 15b–e. These items should reflect both cash and third party in-kind contributions for the three year budget period requested.

B. SF–424A—Budget Information-Non-Construction Programs (Attachment C)

In completing these sections, the Federal funds budget entries will relate to the requested OCS funds only, and Non-Federal will include mobilized funds from all other sources—applicant, state, local, and other. Federal funds other than requested OCS funding should be included as ''Non-Federal'' entries.

Section A, B, and C of SF–424A should reflect budget estimates for each year of the budget period for which funding is being requested.

Section A—Budget Summary

You need only fill in lines 1 and 5 (with the same amounts).

Column (a): Enter Job Opportunities for Low-Income Individuals Program.

Column (b): Catalog of Federal Domestic Assistance number is 93.593.

Columns (c) and (d): Not relevant to this program.

Column (e)–(g): Enter the appropriate amounts.

(Column (e) should not be more than $500,000.)

Section B—Budget Categories

(Note that the following information supersedes the instructions provided with the Form SF–424A in Attachment C.)

For each of the relevant Object Class Categories:

Column 1: Enter the OCS grant funds for the first year;

Column 2: Enter the OCS grant funds for the second year (where appropriate);

Column 3: Enter the OCS grant funds for the third year (where appropriate);

Column 4: Leave blank.

Column 5: Enter the total Federal OCS grant funds for the total budget period by Object Class Categories, showing a total budget of not more than $500,000.

Note: With regard to Object Class Categories: Only out-of-town travel should be entered under category c. Travel. Local travel costs should be entered under category h. Other. Equipment costing less than $5000 should be included in category e. Supplies.

Section C—Non-Federal Resources

This section is to record the amounts of non-Federal resources that will be used to support the project. For the purposes of this application, non-Federal resources means other than the OCS funds for which the applicant is applying. Therefore, mobilized funds from other Federal programs, such as the Job Training Partnership Act program, should be entered on these lines. Provide a brief listing of these non-Federal resources on a separate sheet and describe whether it is a grantee-incurred cost or a third party cash or in-kind contribution. The firm commitment of these resources must be documented and submitted with the application in order to be given credit in the review process under the Public/Private Partnerships program element.

Except in unusual situations, this documentation must be in the form of letters of commitment from the organization(s)/individual(s) from which resources will be received.

Note: Even though there is no matching requirement for the JOLI Program, grantees will be held accountable for any match, cash or in-kind contribution proposed or pledged as part of an approved application. (See Part IV, Element V.)

This section should be completed in accordance with the instructions provided.

Sections D, E, and F may be left blank.

A supporting budget narrative must be submitted providing details of expenditures under each budget category, and justification of dollar amounts which relate the proposed expenditures to the work program and goals of the project. (See Part IV, Element VI.)

C. SF–424B—Assurances-Non-Construction (Attachment D)

All applicants must fill out, sign, date and return the ''Assurances'' with the application.

Part VII—Contents of Application and Receipt Process

A. Contents of Application

Each JOLI application must include all of the following, in the order listed below:

1. Table of Contents.

2. An Abstract of the Proposed Project—very brief, not to exceed 250 words, that would be suitable for use in an announcement that the application has been selected for a grant award and which identifies the type of project(s), the target population, and the major elements of the work plan.

3. Completed Standard Form 424 that has been signed by an Official of the organization applying for the grant who has authority to obligate the organization legally.

(Note: The original SF–424 must bear the original signature of the authorizing representative of the applicant organization.)

4. Budget Information-Non-Construction Programs—(SF–424A).

5. A narrative budget justification for each object class category required under Section B, SF–424A.

6. Certifications and Assurances Required:

Applicants requesting financial assistance for a non-construction project must sign and return Standard Form 424B, ''Assurances: Non-Construction Programs'' with their applications. (See Attachment D.)

Applicants must provide a Certification Regarding Lobbying. Prior to receiving an award in excess of $100,000, applicants shall furnish an executed copy of the lobbying certification. Applicants must sign and return the certification with their application. (See Attachment H.)

Applicants must make the appropriate certification of their compliance with the Drug-Free Workplace Act of 1988. By signing and submitting the applications, applicants are providing the certification and need not mail back the certification with the applications. (See Attachment E.)

Applicants must make the appropriate certification that they are not presently debarred, suspended or otherwise

ineligible for award. By signing and submitting the applications, applicants are providing the certification and need not mail back the certification with the applications. (See Attachment F.)

Applicants must make the appropriate certification of their compliance with all Federal statutes relating to nondiscrimination. By signing and submitting the applications, applicants are providing the certification and need not mail back a certification form.

Applicants must make the appropriate certification of their compliance with the requirements of the Pro-Children Act of 1994 as outlined in Certification Regarding Environmental Tobacco Smoke. (See Attachment J.)

7. A Project Narrative of no more than 30 pages, consisting of the Elements described in Part IV of this announcement set forth in the order therein presented and preceded by a consecutively numbered table of contents.

8. Appendices—proof of nonprofit tax-exempt status as outlined in Part II, section A; proof that the organization is a community development corporation, if applying under the CDC Set-Aside; commitments from officials of businesses that will be expanded or franchised, where applicable; partnership agreement with the designated State TANF agency and CSE agency; Single Point of Contact comments, if applicable; resumes and position descriptions; a business plan, where required; and the Maintenance of Effort Certification (see Part II–J and Attachment M).

The total number of pages for the narrative portion of the application package must not exceed 30 pages. (See Part V.F.3. for pages that do not count against the 30-page limit.)

Pages should be numbered sequentially throughout, including appendices, beginning with the Abstract as page 1.

B. Application Format

Applications must be uniform in composition since OCS may find it necessary to duplicate them for review purposes. Therefore, applications must be submitted on white 8 ½ × 11 inch paper only. Applications must not include colored, oversized or folded materials. Applications should not include organizational brochures or other promotional materials, slides, films, clips, etc., in the proposal. Such material will not be reviewed and will be discarded if included.

Applications must be bound or enclosed in loose-leaf binder notebooks. Preferably, applications should be two-holed punched at the top center and fastened separately with a compressor slide paper fastener, or a binder clip.

C. Acknowledgment of Receipt

Applicants who meet the initial screening criteria outlined in Part V, Section E, will receive an acknowledgment with an assigned identification number within ten days after the deadline date for submission of applications. To facilitate receipt of this acknowledgment from ACF, applicant is asked to include a cover letter with the application containing an E-mail address and facsimile (FAX) number if these items are available to applicant.

Applicants are requested to supply a self-addressed mailing label with their application which can be attached to this acknowledgment notice. This mailing label should reflect the mailing address of the authorizing official who is applying on behalf of the organization. This number and the program letter code, i.e., JO or JS, must be referred to in all subsequent communications with OCS concerning the application. If an acknowledgment is not received within three weeks after the closing date, please notify ACF by telephone at (202) 401–5103.

Part VIII—Post Award Information and Reporting Requirements

A. Notification of Grant Award

Following approval of the application selected for funding, notice of project approval and authority to draw down project funds will be made in writing. The official award document is the Financial Assistance Award which provides the amount of Federal funds approved for use in the project, the project and budget periods for which support is provided, the terms and conditions of the award, and the total project period for which support is contemplated.

B. Attendance at Evaluation Workshops

The Project Directors and third party evaluators will be required to attend two national evaluation workshops in Washington, DC. A three-day program development and evaluation workshop will be scheduled shortly after the effective date of the grant. They also will be required to attend, as presenters, the final evaluation workshop on utilization and dissemination to be held at the end of the project period. Project budgets must include funds for travel to and attendance at these workshops. (See Part IV, Element VI, Budget Appropriateness and Reasonableness.)

C. Reporting Requirements

Grantees will be required to submit semi-annual program progress and financial reports (SF 269) as well as final program progress and financial reports within 90 days of the expiration of the grant. An annual evaluation report will be due 30 days after each twelve months. A final evaluation report will be due 90 days after the expiration of the grant.

D. Audit Requirements

Grantees are subject to the audit requirements in 45 CFR Part 74 (nonprofit organization) and OMB Circular A–133.

E. Prohibitions and Requirements With Regard to Lobbying

Section 319 of Public Law 101–121, signed into law on October 23, 1989, imposes prohibitions and requirements for disclosure and certification related to lobbying on recipients of Federal contracts, grants, cooperative agreements, and loans. It provides limited exemptions for Indian tribes and tribal organizations. Current and prospective recipients (and their subtier contractors and/or grantees) are prohibited from using appropriated funds for lobbying Congress or any Federal agency in connection with the award of a contract, grant, cooperative agreement or loan. In addition, for each award action in excess of $100,000 (or $150,000 for loans) the law requires recipients and their subtier contractors and/or subgrantees (1) to certify that they have neither used nor will use any appropriated funds for payment to lobbyists, (2) to submit a declaration setting forth whether payments to lobbyists have been or will be made out of non-appropriated funds and, if so, the name, address, payment details, and purpose of any agreements with such lobbyists whom recipients or their subtier contractors or subgrantees will pay with the non-appropriated funds and (3) to file quarterly up-dates about the use of lobbyists if an event occurs that materially affects the accuracy of the information submitted by way of declaration and certification.

The law establishes civil penalties for noncompliance and is effective with respect to contracts, grants, cooperative agreements and loans entered into or made on or after December 23, 1989. See Attachment H for certification and disclosure forms to be submitted with the applications for this program.

F. Applicable Federal Regulations

Attachment K indicates the regulations that apply to all applicants/grantees under the Job Opportunities for Low-Income Individuals Program.

Dated: August 4, 2000.

Donald Sykes,

Director, Office of Community Services.

Job Opportunities for Low-Income Individuals Attachments

A 2000 Poverty Income Guidelines
B Standard Form 424
C Standard Form 424A
D Standard Form 424B
E Certification Regarding Drug-Free Workplace
F Certification of Debarment
G E.O. 12372 State Single Point of Contact List
H Certification Regarding Lobbying Activities and Disclosure of Lobbying Activities, SF–LLL
I State Administrators Responsible for TANF
J Certification Regarding Environmental Tobacco Smoke
K DHHS Regulations Applying to All Applicants/ Grantees Under the Job Opportunities for Low-Income Individuals (JOLI) Program
L Business Plan
M Certification Regarding Maintenance of Effort
N State Child Support Enforcement Agencies
O Applicant's Checklist

ATTACHMENT A

Size of family unit	Poverty guideline
2000 Poverty Guidelines for the 48 Contiguous States and the District of Columbia:	
1	$8,350
2	11,250
3	14,150
4	17,050
5	19,950
6	22,850
7	25,750
8	28,650
For family units with more than 8 members, add $2,900 for each additional member. (The same increment applies to smaller family sizes also, as can be seen in the figures above).	
2000 Poverty Guidelines for Alaska:	
1	10,430
2	14,060
3	17,690
4	21,320
5	24,950
6	28,580

ATTACHMENT A—Continued

Size of family unit	Poverty guideline
7	32,210
8	35,840
For family units with more than 8 members, add $3,630 for each additional member. (The same increment applies to smaller family sizes also, as can be seen in the figures above).	
2000 Poverty Guidelines for Hawaii:	
1	9,590
2	12,930
3	16,270
4	19,610
5	22,950
6	26,290
7	29,630
8	32,970
For family units with more than 8 members, add $3,340 for each additional member. (The same increment applies to smaller family sizes also, as can be seen in the figures above).	

BILLING CODE 4184–01– (FNP)

Attachment B

OMB Approval No. 0348-0043

APPLICATION FOR FEDERAL ASSISTANCE

2. DATE SUBMITTED	Applicant Identifier	
3. DATE RECEIVED BY STATE	State Application Identifier	
4. DATE RECEIVED BY FEDERAL AGENCY	Federal Identifier	

1. TYPE OF SUBMISSION:

Application
- ☐ **Construction**
- ☐ **Non-Construction**

Preapplication
- ☐ **Construction**
- ☐ **Non-Construction**

5. APPLICANT INFORMATION

Legal Name:

Organizational Unit:

Address *(give city, county, State, and zip code):*

Name and telephone number of person to be contacted on matters involving this application *(give area code)*

6. EMPLOYER IDENTIFICATION NUMBER *(EIN):*

☐☐ — ☐☐☐☐☐☐☐

7. TYPE OF APPLICANT: *(enter appropriate letter in box)* ☐

A. State
B. County
C. Municipal
D. Township
E. Interstate
F. Intermunicipal
G. Special District
H. Independent School Dist.
I. State Controlled Institution of Higher Learning
J. Private University
K. Indian Tribe
L. Individual
M. Profit Organization
N. Other (Specify) _____

8. TYPE OF APPLICATION:

☐ **New** ☐ **Continuation** ☐ **Revision**

If Revision, enter appropriate letter(s) in box(es) ☐ ☐

A. Increase Award B. Decrease Award C. Increase Duration
D. Decrease Duration Other*(specify):*

_____

9. NAME OF FEDERAL AGENCY:

10. CATALOG OF FEDERAL DOMESTIC ASSISTANCE NUMBER:

☐☐ — ☐☐☐

TITLE:

11. DESCRIPTIVE TITLE OF APPLICANT'S PROJECT:

12. AREAS AFFECTED BY PROJECT *(Cities, Counties, States, etc.):*

13. PROPOSED PROJECT

Start Date	Ending Date

14. CONGRESSIONAL DISTRICTS OF:

a. Applicant

b. Project

15. ESTIMATED FUNDING:

a. Federal	$ .00
b. Applicant	$ .00
c. State	$ .00
d. Local	$ .00
e. Other	$ .00
f. Program Income	$ .00
g. TOTAL	$ .00

16. IS APPLICATION SUBJECT TO REVIEW BY STATE EXECUTIVE ORDER 12372 PROCESS?

a. YES. THIS PREAPPLICATION/APPLICATION WAS MADE AVAILABLE TO THE STATE EXECUTIVE ORDER 12372 PROCESS FOR REVIEW ON:

DATE _____

b. No. ☐ PROGRAM IS NOT COVERED BY E. O. 12372
☐ OR PROGRAM HAS NOT BEEN SELECTED BY STATE FOR REVIEW

17. IS THE APPLICANT DELINQUENT ON ANY FEDERAL DEBT?

☐ **Yes** **If "Yes," attach an explanation.** ☐ **No**

18. TO THE BEST OF MY KNOWLEDGE AND BELIEF, ALL DATA IN THIS APPLICATION/PREAPPLICATION ARE TRUE AND CORRECT, THE DOCUMENT HAS BEEN DULY AUTHORIZED BY THE GOVERNING BODY OF THE APPLICANT AND THE APPLICANT WILL COMPLY WITH THE ATTACHED ASSURANCES IF THE ASSISTANCE IS AWARDED.

a. Type Name of Authorized Representative	b. Title	c. Telephone Number
d. Signature of Authorized Representative		e. Date Signed

Previous Edition Usable
Authorized for Local Reproduction

Standard Form 424 (Rev. 7-97)
Prescribed by OMB Circular A-102

Instructions for the SF–424—Attachment B

Public reporting burden for this collection of information is estimated to average 45 minutes per response, including time for reviewing instructions, searching existing data sources, gathering and maintaining the data needed, and completing and reviewing the collection of information. Send comments regarding the burden estimate or any other aspect of this collection of information, including suggestions for reducing this burden, to the Office of Management and Budget, Paperwork Reduction Project (0348–0043), Washington, DC 20503.

Please do not return your completed form to the Office of Management and Budget. Send it to the address provided by the sponsoring agency.

This is a standard form used by applicants as a required facesheet for preapplications and applications submitted for Federal assistance. It will be used by Federal agencies to obtain applicant certification that States which have established a review and comment procedure in response to Executive Order 12372 and have selected the program to be included in their process, have been given an opportunity to review the applicant's submission.

Item and Entry

1. Self-explanatory.
2. Date application submitted to Federal agency (or State if applicable) and applicant's control number (if applicable).
3. State use only (if applicable).
4. If this application is to continue or revise an existing award, enter present Federal identifier number. If for a new project, leave blank.
5. Legal name of applicant, name of primary organizational unit which will undertake the assistance activity, complete address of the applicant, and name and telephone number of the person to contact on matters related to this application.
6. Enter Employer Identification Number (EIN) as assigned by the Internal Revenue Service.
7. Enter the appropriate letter in the space provided.
8. Check appropriate box and enter appropriate letter(s) in the space(s) provided:

—''New'' means a new assistance award.
—''Continuation'' means an extension for an additional funding/budget period for a project with a projected completion date.
—''Revision'' means any change in the Federal Government's financial obligation or contingent liability from an existing obligation.

9. Name of Federal agency from which assistance is being requested with this application.
10. Use the Catalog of Federal Domestic Assistance number and title of the program under which assistance is requested.
11. Enter a brief descriptive title of the project. If more than one program is involved, you should append an explanation on a separate sheet. If appropriate (*e.g.*, construction or real property projects), attach a map showing project location. For preapplications, use a separate sheet to provide a summary description of this project.
12. List only the largest political entities affected (*e.g.*, State, counties, cities).
13. Self-explanatory.
14. List the applicant's Congressional District and any District(s) affected by the program or project.
15. Amount requested or to be contributed during the first funding/budget period by each contributor. Value of in-kind contributions should be included on appropriate lines as applicable. If the action will result in a dollar change to an existing award, indicate *only* the amount of the change. For decreases, enclose the amounts in parentheses. If both basic and supplemental amounts are included, show breakdown on an attached sheet. For multiple program funding, use totals and show breakdown using same categories as item 15.
16. Applicants should contact the State Single Point of Contact (SPOC) for Federal Executive Order 12372 to determine whether the application is subject to the State intergovernmental review process.
17. This question applies to the applicant organization, not the person who signs as the authorized representative. Categories of debt include delinquent audit disallowances, loans and taxes.
18. To be signed by the authorized representative of the applicant. A copy of the governing body's authorization for you to sign this application as official representative must be on file in the applicant's office. (Certain Federal agencies may require that this authorization be submitted as part of the application.)

BILLING CODE 4184–01–P

BUDGET INFORMATION - Non-Construction Programs

Attachment C

OMB Approval No. 0348-0044

SECTION A - BUDGET SUMMARY

Grant Program Function or Activity (a)	Catalog of Federal Domestic Assistance Number (b)	Estimated Unobligated Funds		New or Revised Budget		
		Federal (c)	Non-Federal (d)	Federal (e)	Non-Federal (f)	Total (g)
1.		$	$	$	$	$
2.						
3.						
4.						
5. Totals		$	$	$	$	$

SECTION B - BUDGET CATEGORIES

6. Object Class Categories	GRANT PROGRAM, FUNCTION OR ACTIVITY				Total
	(1)	(2)	(3)	(4)	(5)
a. Personnel	$	$	$	$	$
b. Fringe Benefits					
c. Travel					
d. Equipment					
e. Supplies					
f. Contractual					
g. Construction					
h. Other					
i. Total Direct Charges *(sum of 6a-6h)*					
j. Indirect Charges					
k. TOTALS *(sum of 6i and 6j)*	$	$	$	$	$
7. Program Income	$	$	$	$	$

Authorized for Local Reproduction

Previous Edition Usable

Standard Form 424A (Rev. 7-97)
Prescribed by OMB Circular A-102

Attachment C, Page 2

SECTION C - NON-FEDERAL RESOURCES				
(a) Grant Program	(b) Applicant	(c) State	(d) Other Sources	(e) TOTALS
8.	$	$	$	$
9.				
10.				
11.				
12. TOTAL *(sum of lines 8-11)*	$	$	$	$

SECTION D - FORECASTED CASH NEEDS					
	Total for 1st Year	1st Quarter	2nd Quarter	3rd Quarter	4th Quarter
13. Federal	$	$	$	$	$
14. Non-Federal					
15. TOTAL *(sum of lines 13 and 14)*	$	$	$	$	$

SECTION E - BUDGET ESTIMATES OF FEDERAL FUNDS NEEDED FOR BALANCE OF THE PROJECT				
(a) Grant Program	FUTURE FUNDING PERIODS (Years)			
	(b) First	(c) Second	(d) Third	(e) Fourth
16.	$	$	$	$
17.				
18.				
19.				
20. TOTAL *(sum of lines 16-19)*	$	$	$	$

SECTION F - OTHER BUDGET INFORMATION	
21. Direct Charges:	22. Indirect Charges:
23. Remarks:	

Authorized for Local Reproduction

Standard Form 424A (Rev. 7-97) Page

BILLING CODE 4184–01–C

Instructions for the SF–424A—Attachment C

Public reporting burden for this collection of information is estimated to average 180 minutes per response, including time for reviewing instructions, searching existing data sources, gathering and maintaining the data needed, and completing and reviewing the collection of information. Send comments regarding the burden estimate or any other aspect of this collection of information, including suggestions for reducing this burden, to the Office of Management and Budget, Paperwork Reduction Project (0348–0040), Washington, DC 20503.

Please do not return your completed form to the Office of Management and Budget. Send it to the address provided by the sponsoring agency.

General Instructions

This form is designed so that application can be made for funds from one or more grant programs. In preparing the budget, adhere to any existing Federal grantor agency guidelines which prescribe how and whether budgeted amounts should be separately shown for different functions or activities within the program. For some programs, grantor agencies may require budgets to be separately shown by functions or activity. For other programs, grantor agencies may require a breakdown by function or activity. Sections A, B, C, and D should include budget estimates for the whole project except when applying for assistance which requires Federal authorization in annual or other funding period increments. In the latter case, Sections A, B, C, and D should provide the budget for the first budget period (usually a year) and Section E should present the need for Federal assistance in the subsequent budget periods. All applications should contain a breakdown by the object class categories shown in Lines a–k of Section B.

Section A. Budget Summary Lines 1–4

Columns (a) and (b)

For applications pertaining to a single Federal grant program (Federal Domestic Assistance Catalog number) and not requiring a functional or activity breakdown, enter on Line 1 under Column (a) the Catalog program title and the Catalog number in Column (b).

For applications pertaining to a single program requiring budget amounts by multiple functions or activities, enter the name of each activity or function on each line in Column (a), and enter the Catalog number in Column (b). For applications pertaining to multiple programs where none of the programs require a breakdown by function or activity, enter the Catalog program title on each lien in Column (a) and the respective Catalog number on each lien in Column (b).

For applications pertaining to multiple programs where one or more programs require a breakdown by function or activity, prepare a separate sheet for each program requiring the breakdown. Additional sheets should be used when one form does not provide adequate space for all breakdown of data required. However, when more than one sheet is used, the first page should provide the summary totals by programs.

Lines 1–4, Columns (c) through (g)

For new applications, leave Column (c) and (d) blank. For each line entry in Columns (a) and (b), enter in Columns (e), (f), and (g) the appropriate amounts of funds needed to support the project for the first funding period (usually a year).

For continuing grant program applications, submit these forms before the end of each funding period as required by the grantor agency. Enter in Columns (c) and (d) the estimated amounts of funds which will remain unobligated at the end of the grant funding period only if the Federal grantor agency instructions provide for this. Otherwise, leave these columns blank. Enter in columns (e) and (f) the amounts of funds needed for the upcoming period. The amount(s) in Column (g) should be the sum of amounts in Columns (e) and (f).

For supplemental grants and changes to existing grants, do not use Columns (c) and (d). Enter in Column (e) the amount of the increase or decrease of Federal funds and enter in Column (f) the amount of the increase or decrease of non-Federal funds. In Column (g) enter the new total budgeted amount (Federal and non-Federal) which includes the total previous authorized budgeted amounts plus or minus, as appropriate, the amounts shown in Columns (e) and (f). The amount(s) in Column (g) should not equal the sum of amounts in Columns (e) and (f).

Line 5—Show the totals for all columns used.

Section B. Budget Categories

In the column headings (1) through (4), enter the titles of the same programs, functions, and activities shown on Lines 1–4, Column (a), Section A. When additional sheets are prepared for Section A, provide similar column headings on each sheet. For each program, function or activity, fill in the total requirements for funds (both Federal and non-Federal) by object class categories.

Line 6a–i—Show the totals of Lines 6a to 6h in each column.

Line 6j—Show the amount of indirect cost.

Line 6k—Enter the total of amounts on Lines 6i and 6j. For all applications for new grants and continuation grants the total amount in column (5), Line 6k, should be the same as the total amount shown in Section A, Column (g), Line 5. For supplemental grants and changes to grants, the total amount of the increase or decrease as shown in Columns (1)–(4), Line 6k should be the same as the sum of the amounts in Section A, Columns (e) and (f) on Line 5.

Line 7—Enter the estimated amount of income, if any, expected to be generated from this project. Do not add or subtract this amount from the total project amount. Show under the program narrative statement the nature and source of income. The estimated amount of program income may be considered by the Federal grantor agency in determining the total amount of the grant.

Section C. Non-Federal Resources

Lines 8–11—Enter amounts of non-Federal resources that will be used on the grant. If in-kind contributions are included, provide a brief explanation on a separate sheet.

Column (a)—Enter the program titles identical to Column (a), Section A. A breakdown by function or activity is not necessary.

Column (b)—Enter the contribution to be made by the applicant.

Column (c)—Enter the amount of the State's cash and in-kind contribution if the applicant is not a State or State agency. Applicants which are a State or State agencies should leave this column blank.

Column (d)—Enter the amount of cash and in-kind contributions to be made from all other sources.

Column (e)—Enter totals of Columns (b), (c), and (d).

Line 12—Enter the total for each of Columns (b)–(e). The amount in Column (e) should be equal to the amount on Line 5, Column (f), Section A.

Section D. Forecasted Cash Needs

Line 13—Enter the amount of cash needed by quarter from the grantor agency during the first year.

Line 14—Enter the amount of cash from all other sources needed by quarter during the first year.

Line 15e—Enter the totals of amounts on Lines 13 and 14.

Section E. Budget Estimates of Federal Funds Needed for Balance of the Project

Lines 16–19—Enter in Column (a) the same grant program titles shown in Column (a), Section A. A breakdown by function or activity is not necessary. For new applications and continuation grant applications, enter in the proper columns amounts of Federal funds which will be needed to complete the program or project over the succeeding funding periods (usually in years). This section need not be completed for revisions (amendments, changes, or supplements) to funds for the current year of existing grants.

If more than four lines are needed to list the program titles, submit additional schedules as necessary.

Line 20—Enter the total for each of the Columns (b)–(e). When additional schedules are prepared for this Section, annotate accordingly and show the overall totals on this line.

Section F. Other Budget Information

Line 21—Use this space to explain amounts for individual direct object class cost categories that may appear to be out of the ordinary or to explain the details as required by the Federal grantor agency.

Line 22—Enter the type of indirect rate (provisional, predetermined, final or fixed) that will be in effect during the funding period, the estimated amount of the base to which the rate is applied, and the total indirect expense.

Line 23—Provide any other explanations or comments deemed necessary.

Assurances—Non-Construction Programs—Attachment D

Public reporting burden for this collection of information is estimated to average 15 minutes per response, including time for reviewing instructions, searching existing data sources, gathering and maintaining the

data needed, and completing and reviewing the collection of information. Send comments regarding the burden estimate or any other aspect of this collection of information, including suggestions for reducing this burden, to the Office of Management and Budget, Paperwork Reduction Project (0348–0040), Washington, DC 20503.

Please do not return your completed form to the Office of Management and Budget. Send it to the address provided by the sponsoring agency.

Note: Certain of these assurances may not be applicable to your project or program. If you have questions, please contact the awarding agency. Further, certain Federal awarding agencies may require applicants to certify to additional assurances. If such is the case, you will be notified.

As the duly authorized representative of the applicant, I certify that the applicant:

1. Has the legal authority to apply for Federal assistance and the institutional, managerial and financial capability (including funds sufficient to pay the non-Federal share of project cost) to ensure proper planning, management and completion of the project described in this application.

2. Will give the awarding agency, the Comptroller General of the United States and, if appropriate, the State, through any authorized representative, access to and the right to examine all records, books, papers, or documents related to the award; and will establish a proper accounting system in accordance with generally accepted accounting standards or agency directives.

3. Will establish safeguards to prohibit employees from using their positions for a purpose that constitutes or presents the appearance of personal or organizational conflict of interest, or personal gain.

4. Will initiate and complete the work within the applicable time frame after receipt of approval of the awarding agency.

5. Will comply with the Intergovernmental Personnel Act of 1970 (42 U.S.C. §§ 4728–4763) relating to prescribed standards for merit systems for programs funded under one of the 19 statutes or regulations specified in Appendix A of OPM's Standards for a Merit System of Personnel Administration (5 C.F.R. 900, Subpart F).

6. Will comply with all Federal statutes relating to nondiscrimination. These include but are not limited to: (a) Title VI of the Civil Rights Act of 1964 (P.L. 88–352) which prohibits discrimination on the basis of race, color or national origin; (b) Title IX of the Education Amendments of 1972, as amended (20 U.S.C. §§ 1681–1683, and 1685–1686), which prohibits discrimination on the basis of sex; (c) Section 504 of the Rehabilitation Act of 1973, as amended (29 U.S.C. § 794), which prohibits discrimination on the basis of handicaps; (d) the Age Discrimination Act of 1975, as amended (42 U.S.C. §§ 6101–6107), which prohibits discrimination on the basis of age; (e) the Drug Abuse Office and Treatment Act of 1972 (P.L. 92–255), as amended, relating to nondiscrimination on the basis of drug abuse; (f) the Comprehensive Alcohol Abuse and Alcoholism Prevention, Treatment and Rehabilitation Act of 1970 (P.L. 91–616 , as amended, relating to nondiscrimination on the basis of alcohol abuse or alcoholism; (g) §§ 523 and 527 of the Public Health Service Act of 1912 (42 U.S.C. §§ 290 dd-3 and 290 ee 3), as amended, relating to confidentiality of alcohol and drug abuse patient records; (h) Title VIII of the Civil Rights Act of 1968 (42 U.S.C. §§ 3601 et seq.), as amended, relating to nondiscrimination in the sale, rental or financing of housing; (i) any other nondiscrimination provisions in the specific statute(s) under which application for Federal assistance is being made; and, (j) the requirements of any other nondiscrimination statute(s) which may apply to the application.

7. Will comply, or has already complied, with the requirements of Titles II and III of the Uniform Relocation Assistance and Real Property Acquisition Policies Act of 1970 (P.L. 91–646) which provide for fair and equitable treatment of persons displaced or whose property is acquired as a result of Federal or federally-assisted programs. These requirements apply to all interests in real property acquired for project purposes regardless of Federal participation in purchases.

8. Will comply, as applicable, with provisions of the Hatch Act (5 U.S.C. §§ 1501–1508 and 7324–7328) which limit the political activities of employees whose principal employment activities are funded in whole or in part with Federal funds.

9. Will comply, as applicable, with the provisions of the Davis-Bacon Act (40 U.S.C. §§ 276a to 276a-7), the Copeland Act (40 U.S.C. § 276c and 18 U.S.C. § 874), and the Contract Work Hours and Safety Standards Act (40 U.S.C. §§ 327–333), regarding labor standards for federally-assisted construction subagreements.

10. Will comply, if applicable, with flood insurance purchase requirements of Section 102(a) of the Flood Disaster Protection Act of 1973 (P.L. 93–234) which requires recipients in a special flood hazard area to participate in the program and to purchase flood insurance if the total cost of insurable construction and acquisition is $10,000 or more.

11. Will comply with environmental standards which may be prescribed pursuant to the following: (a) institution of environmental quality control measures under the National Environmental Policy Act of 1969 (P.L. 91–190) and Executive Order (EO) 11514; (b) notification of violating facilities pursuant to EO 11738; (c) protection of wetlands pursuant to EO 11990; (d) evaluation of flood hazards in floodplains in accordance with EO 11988; (e) assurance of project consistency with the approved State management program developed under the Coastal Zone Management Act of 1972 (16 U.S.C. §§ 1451 et seq.); (f) conformity of Federal actions to State (Clean Air) Implementation Plans under Section 176(c) of the Clean Air Act of 1955, as amended (42 U.S.C. §§ 7401 et seq.); (g) protection of underground sources of drinking water under the Safe Drinking Water Act of 1974, as amended (P.L. 93–523); and, (h) protection of endangered species under the Endangered Species Act of 1973, as amended (P.L. 93–205).

12. Will comply with the Wild and Scenic Rivers Act of 1968 (16 U.S.C. §§ 1271 et seq.) related to protecting components or potential components of the national wild and scenic rivers system.

13. Will assist the awarding agency in assuring compliance with Section 106 of the National Historic Preservation Act of 1966, as amended (16 U.S.C. § 470), EO 11593 (identification and protection of historic properties), and the Archaeological and Historic Preservation Act of 1974 (16 U.S.C. §§ 469a-1 et seq.).

14. Will comply with P.L. 93–348 regarding the protection of human subjects involved in research, development, and related activities supported by this award of assistance.

15. Will Comply with the Laboratory Animal Welfare Act of 1966 (P.L. 89–544, as amended, 7 U.S.C. §§ 2131 et seq.) pertaining to the care, handling, and treatment of warm blooded animals held for research, teaching, or other activities supported by this award of assistance.

16. Will comply with the Lead-Based Paint Poisoning Prevention Act (42 U.S.C. §§ 4801 et seq.) which prohibits the use of lead-based paint in construction or rehabilitation of residence structures.

17. Will cause to be performed the required financial and compliance audits in accordance with the Single Audit Act Amendments of 1996 and OMB Circular No. A–133, ''Audits of States, Local Governments, and Non-Profit Organizations.''

18. Will comply with all applicable requirements of all other Federal laws, executive orders, regulations, and policies governing this program.

Signature of Authorized Certifying Official

Title

Applicant Organization

Date Submitted

Certification Regarding Drug-Free Workplace Requirements—Attachment E

This certification is required by the regulations implementing the Drug-Free Workplace Act of 1988: 45 CFR Part 76, Subpart, F. Sections 76.630(c) and (d)(2) and 76.645(a)(1) and (b) provide that a Federal Agency may designate a central receipt point for STATE–WIDE AND STATE AGENCY–WIDE certifications, and for notification of criminal drug convictions. For the Department of Health and Human Services, the central pint is: Division of Grants Management and Oversight, Office of Management and Acquisition, Department of Health and Human Services, Room 517–D, 200 Independence Avenue, SW Washington, DC 20201.

Certification Regarding Drug-Free Workplace Requirements (Instructions for Certification)

1. By signing and/or submitting this application or grant agreement, the grantee is providing the certification set out below.

2. The certification set out below is a material representation of fact upon which reliance is placed when the agency awards

the grant. If it is later determined that the grantee knowingly rendered a false certification, or otherwise violates the requirements of the Drug-Free Workplace Act, the agency, in addition to any other remedies available to the Federal Government, may take action authorized under the Drug-Free Workplace Act.

3. For grantees other than individuals, Alternate I applies.

4. For grantees who are individuals, Alternate II applies.

5. Workplaces under grants, for grantees other than individuals, need not be identified on the certification. If known, they may be identified in the grant application. If the grantee does not identify the workplaces at the time of application, or upon award, if there is no application, the grantee must keep the identify of the workplace(s) on file in its office and make the information available for Federal inspection. Failure to identify all known workplaces constitutes a violation of the grantee's drug-free workplace requirements.

6. Workplace identifications must include the actual address of buildings (or parts of buildings) or other sites where work under the grant takes place. Categorical descriptions may be used (*e.g.,* all vehicles of a mass transit authority or State highway department while in operation, State employees in each local unemployment office, performers in concert halls or radio studios).

7. If the workplace identified to the agency changes during the performance of the grant, the grantee shall inform the agency of the change(s), if it previously identified the workplaces in question (see paragraph five).

8. Definitions of terms in the Nonprocurement Suspension and Debarment common rule and Drug-Free Workplace common rule apply to this certification. Grantees' attention is called, in particular, to the following definitions from these rules:

Controlled substance means a controlled substance in Schedules I through V of the Controlled Substances Act (21 U.S.C. 812) and as further defined by regulation (21 CFR 1308.11 through 1308.15);

Conviction means a finding of guilt (including a plea of nolo contendere) or imposition of sentence, or both, by any judicial body charged with the responsibility to determine violations of the Federal or State criminal drug statutes;

Criminal drug statute means a Federal or non-Federal criminal statute involving the manufacture, distribution, dispensing, use, or possession of any controlled substance;

Employee means the employee of a grantee directly engaged in the performance of work under a grant, including: (i) All direct charge employees; (ii) All indirect charge employees unless their impact or involvement is insignificant to the performance of the grant; and, (iii) Temporary personnel and consultants who are directly engaged in the performance of work under the grant and who are on the grantee's payroll. This definition does not include workers not on the payroll of the grantee (*e.g.,* volunteers, even if used to meet a matching requirement; consultants or independent contractors not on the grantee's payroll; or employees of subrecipients or subcontractors in covered workplaces).

Certification Regarding Drug-Free Workplace Requirements

Alternate I. (Grantees Other Than Individuals)

The grantee certifies that it will or will continue to provide a drug-free workplace by:

(a) Publishing a statement notifying employees that the unlawful manufacture, distribution, dispensing, possession, or use of a controlled substance is prohibited in the grantee's workplace and specifying the actions that will be taken against employees for violation of such prohibition;

(b) Establishing an ongoing drug-free awareness program to inform employees about—

(1) The dangers of drug abuse in the workplace;

(2) The grantee's policy of maintaining a drug-free workplace;

(3) Any available drug counseling, rehabilitation, and employee assistance programs; and

(4) The penalties that may be imposed upon employees for drug abuse violations occurring in the workplace;

(c) Making it a requirement that each employee to be engaged in the performance of the grant be given a copy of the statement required by paragraph (a);

(d) Notifying the employee in the statement required by paragraph (a) that, as a condition of employment under the grant, the employee will—

(1) Abide by the terms of the statement; and

(2) Notify the employer in writing of his or her conviction for a violation of a criminal drug statute occurring in the workplace no later than five calendar days after such conviction;

(e) Notifying the agency in writing, within ten calendar days after receiving notice under paragraph (d)(2) from an employee or otherwise receiving actual notice of such conviction. Employers of convicted employees must provide notice, including position title, to every grant officer or other designee on whose grant activity the convicted employee was working, unless the Federal agency has designated a central point for the receipt of such notices. Notice shall include the identification number(s) of each affected grant;

(f) Taking one of the following actions, within 30 calendar days of receiving notice under paragraph (d)(2), with respect to any employee who is so convicted—

(1) Taking appropriate personnel action against such an employee, up to and including termination, consistent with the requirements of the Rehabilitation Act of 1973, as amended; or

(2) Requiring such employee to participate satisfactorily in a drug abuse assistance or rehabilitation program approved for such purposes by a Federal, State, or local health, law enforcement, or other appropriate agency;

(g) Making a good faith effort to continue to maintain a drug-free workplace through implementation of paragraphs (a), (b), (c), (d), (e) and (f).

(B) The grantee may insert in the space provided below the site(s) for the performance of work done in connection with the specific grant:

Place of Performance (Street address, city, county, state, zip code)

Check if there are workplaces on file that are not identified here.

Alternate II. (Grantees Who Are Individuals)

(a) The grantee certifies that, as a condition of the grant, he or she will not engage in the unlawful manufacture, distribution, dispensing,possession, or use of a controlled substance in conducting any activity with the grant;

(b) If convicted of a criminal drug offense resulting from a violation occurring during the conduct of any grant activity, he or she will report the conviction, in writing within 10 calendar days of the conviction, to every grant officer or other designee, unless the Federal agency designates a central point for the receipt of such notices. When notices is made to such a central point, it shall include the identification number(s) of each affected grant.

[55 FR 21690, 21702, May 25, 1990]

Certification Regarding Debarment, Suspension and Other Responsibility Matters—Attachment F

Certification Regarding Debarment, Suspension and Other Responsibility Matters—Primary Covered Transactions

Instructions for Certification

1. By signing and submitting this proposal, the prospective primary participant is providing the certification set out below.

2. The inability of a person to provide the certification required below will not necessarily result in denial of participation in this covered transaction. The prospective participant shall submit an explanation of why it cannot provide the certification set out below. The certification or explanation will be considered in connection with the department or agency's determination whether to enter into this transaction. However, failure of the prospective primary participant to furnish a certification or an explanation shall disqualify such person from participation in this transaction.

3. The certification in this clause is a material representation of fact upon which reliance was placed when the department or agency determined to enter into this transaction. If it is later determined that the prospective primary participant knowingly rendered an erroneous certification, in addition to other remedies available to the Federal Government, the department or agency may terminate this transaction for cause or default.

4. The prospective primary participant shall provide immediate written notice to the department or agency to which this proposal is submitted if at any time the prospective primary participant learns that its certification was erroneous when submitted or has become erroneous by reason of changed circumstances.

5. The terms covered transaction, debarred, suspended, ineligible, lower tier covered transaction, participant, person, primary covered transaction, principal, proposal, and

voluntarily excluded, as used in this clause, have the meanings set out in the Definitions and Coverage sections of the rules implementing Executive Order 12549. You may contact the department or agency to which this proposal is being submitted for assistance in obtaining a copy of those regulations.

6. The prospective primary participant agrees by submitting this proposal that, should the proposed covered transaction be entered into, it shall not knowingly enter into any lower tier covered transaction with a person who is proposed for debarment under 48 CFR part 9, subpart 9.4, debarred, suspended, declared ineligible, or voluntarily excluded from participation in this covered transaction, unless authorized by the department or agency entering into this transaction.

7. The prospective primary participant further agrees by submitting this proposal that it will include the clause titled ''Certification Regarding Debarment, Suspension, Ineligibility and Voluntary Exclusion-Lower Tier Covered Transaction,'' provided by the department or agency entering into this covered transaction, without modification, in all lower tier covered transactions and in all solicitations for lower tier covered transactions.

8. A participant in a covered transaction may rely upon a certification of a prospective participant in a lower tier covered transaction that it is not proposed for debarment under 48 CFR part 9, subpart 9.4, debarred, suspended, ineligible, or voluntarily excluded from the covered transaction, unless it knows that the certification is erroneous. A participant may decide the method and frequency by which it determines the eligibility of its principals. Each participant may, but is not required to, check the List of Parties Excluded from Federal Procurement and Nonprocurement Programs.

9. Nothing contained in the foregoing shall be construed to require establishment of a system of records in order to render in good faith the certification required by this clause. The knowledge and information of a participant is not required to exceed that which is normally possessed by a prudent person in the ordinary course of business dealings.

10. Except for transactions authorized under paragraph 6 of these instructions, if a participant in a covered transaction knowingly enters into a lower tier covered transaction with a person who is proposed for debarment under 48 CFR part 9, subpart 9.4, suspended, debarred, ineligible, or voluntarily excluded from participation in this transaction, in addition to other remedies available to the Federal Government, the department or agency may terminate this transaction for cause or default.

Certification Regarding Debarment, Suspension and Other Responsibility Matters—Primary Covered Transactions

(1) The prospective primary participant certifies to the best of its knowledge and belief, that it and its principals;

(a) Are not presently debarred, suspended, proposed for debarment, declared ineligible, or voluntarily excluded by any Federal department or agency;

(b) Have not within a three-year period preceding this proposal been convicted of or had a civil judgment rendered against them for commission of fraud or a criminal offense in connection with obtaining, attempting to obtain, or performing a public (Federal, State or local) transaction or contract under a public transaction; violation of Federal or State antitrust statutes or commission of embezzlement, theft, forgery, bribery, falsification or destruction of records, making false statements, or receiving stolen property;

(c) Are not presently indicted for or otherwise criminally or civilly charged by a governmental entity (Federal, State or local) with commission of any of the offenses enumerated in paragraph (1)(b) of this certification; and

(d) Have not within a three-year period preceding this application/proposal had one or more public transactions (Federal, State or local) terminated for cause or default.

(2) Where the prospective primary participant is unable to certify to any of the statements in this certification, such prospective participant shall attach an explanation to this proposal.

Certification Regarding Debarment, Suspension, Ineligibility and Voluntary Exclusion—Lower Tier Covered Transactions

Instructions for Certification

1. By signing and submitting this proposal, the prospective lower tier participant is providing the certification set out below.

2. The certification in this clause is a material representation of fact upon which reliance was placed when this transaction was entered into. If it is later determined that the prospective lower tier participant knowingly rendered an erroneous certification, in addition to other remedies available to the Federal Government the department or agency with which this transaction originated may pursue available remedies, including suspension and/or debarment.

3. The prospective lower tier participant shall provide immediate written notice to the person to which this proposal is submitted if at any time the prospective lower tier participant learns that its certification was erroneous when submitted or had become erroneous by reason of changed circumstances.

4. The terms covered transaction, debarred, suspended, ineligible, lower tier covered transaction, participant, person, primary covered transaction, principal, proposal, and voluntarily excluded, as used in this clause, have the meaning set out in the Definitions and Coverage sections of rules implementing Executive Order 12549. You may contact the person to which this proposal is submitted for assistance in obtaining a copy of those regulations.

5. The prospective lower tier participant agrees by submitting this proposal that, [[Page 33043]] should the proposed covered transaction be entered into, it shall not knowingly enter into any lower tier covered transaction with a person who is proposed for debarment under 48 CFR part 9, subpart 9.4, debarred, suspended, declared ineligible, or voluntarily excluded from participation in this covered transaction, unless authorized by the department or agency with which this transaction originated.

6. The prospective lower tier participant further agrees by submitting this proposal that it will include this clause titled ''Certification Regarding Debarment, Suspension, Ineligibility and Voluntary Exclusion-Lower Tier Covered Transaction,'' without modification, in all lower tier covered transactions and in all solicitations for lower tier covered transactions.

7. A participant in a covered transaction may rely upon a certification of a prospective participant in a lower tier covered transaction that it is not proposed for debarment under 48 CFR part 9, subpart 9.4, debarred, suspended, ineligible, or voluntarily excluded from covered transactions, unless it knows that the certification is erroneous. A participant may decide the method and frequency by which it determines the eligibility of its principals. Each participant may, but is not required to, check the List of Parties Excluded from Federal Procurement and Nonprocurement Programs.

8. Nothing contained in the foregoing shall be construed to require establishment of a system of records in order to render in good faith the certification required by this clause. The knowledge and information of a participant is not required to exceed that which is normally possessed by a prudent person in the ordinary course of business dealings.

9. Except for transactions authorized under paragraph 5 of these instructions, if a participant in a covered transaction knowingly enters int a lower tier covered transaction with a person who is proposed for debarment under 48 CFR part 9, subpart 9.4, suspended, debarred, ineligible, or voluntarily excluded from participation in this transaction, in addition to other remedies available to the Federal Government, the department or agency with which this transaction originated may pursue available remedies, including suspension and/or debarment.

Certification Regarding Debarment, Suspension, Ineligibility an Voluntary Exclusion—Lower Tier Covered Transactions

(1) The prospective lower tier participant certifies, by submission of this proposal, that neither it nor its principals is presently debarred, suspended, proposed for debarment, declare ineligible, or voluntarily excluded from participation in this transaction by any Federal department or agency.

(2) Where the prospective lower tier participant is unable to certify to any of the statements in this certification, such prospective participant shall attach an explanation to the proposal.

State Single Points of Contact (SPOCs)—Attachment G

Office of Management and Budget

It is estimated that in 2001, the Federal Government will outlay $305.6 billion in grants to State and local governments. Executive Order 12372, ''Intergovernmental

Review of Federal Programs,'' was issued with the desire to foster the intergovernmental partnership and strengthen federalism by relying on State and local processes for the coordination and review of proposed Federal financial assistance and direct Federal development. The Order allows each State to designate an entity to perform this function. Below is the official list of those entities. For those States that have a home page for their designated entity, a direct link has been provided below. States that are not listed on this page have chosen not to participate in the intergovernmental review process, and therefore do not have a SPOC. If you are located within one of these States, you may still send application materials directly to a Federal awarding agency.

ARIZONA

Joni, Saad, Arizona State Clearinghouse, 3800 N. Central Avenue, Fourteenth Floor, Phoenix, Arizona 85012, Telephone: (602) 280–1315, Fax: (602) 280–8144, jonis@ep.state.az.us

ARKANSAS

Tracy L. Copeland, Manager, State Clearinghouse, Office of Intergovernmental Services, Department of Finance and Administration, 1515 W. 7th St., Room 412, Little Rock, Arkansas 72203, Telephone: (501) 682–1074, Fax: (501) 682–5206, tlcopeland@dfa.state.ar.us

CALIFORNIA

Grants Coordination, State Clearinghouse, Office of Planning and Research, P.O. Box 3044, Room 222, Sacramento, California 95812–3044, Telephone: (916) 445–0613, Fax: (916) 323–3018, state.clearninghouse@opr.ca.gov

DELAWARE

Charles H. Hopkins, Executive Department, Office of the Budget, 540 S. Dupont Highway, 3rd Floor, Dover, Delaware 19901, Telephone: (302) 739–3323, Fax: (302) 739–5661, chopkins@state.de.us

DISTRICT OF COLUMBIA

Ron Seldon, Office of Grants Management and Development, 717 14th Street NW., Suite 1200, Washington, DC 20005, Telephone: (202) 727–1705, Fax: (202) 727–1617, ogmd-ogmd@dcgov.org

FLORIDA

Cherie L. Trainor, Florida State Clearinghouse, Department of Community Affairs, 2555 Shumard Oak Blvd., Tallahassee, Florida 32399–2100, Telephone: (850) 922–5438, (850) 414–5495 (direct), Fax: (850) 414–0479, cherie.trainor@dca.state.fl.us

GEORGIA

Georgia State Clearinghouse, 270 Washington Street, SW, Atlanta, Georgia 30334, Telephone: (404) 656–3855, Fax: (404) 656–7901, gach@mail.opb.state.ga.us

ILLINOIS

Virginia Bova, Department of Commerce and Community Affairs, James R. Thompson Center, 100 West Randolph, Suite 3–400, Chicago, Illinois 60601, Telephone: (312) 814–6028, Fax: (312) 814–8485, vbova@commerce.state.il.us

INDIANA

Frances Williams, State Budget Agency, 212 State House, Indianapolis, Indiana 46204–2796, Telephone: (317) 232–2972, Fax: (317) 233–3323, fwilliams@sba.state.in.us

IOWA

Steven R. McCann, Division of Community and Rural Development, Iowa Department of Economic Development, 200 East Grand Avenue, Des Moines, Iowa 50509, Telephone: (515) 242–4719, Fax: (515) 242–4809, steve.mccann@ided.state.ia.us

KENTUCKY

Ron Cook, Department of Local Government, Kentucky State Clearinghouse, 1024 Capital Center Drive, Suite 340, Frankfort, Kentucky 40601, Telephone: (502) 573–2382, Fax: (502) 573–0175, ron.cook@mail.state.ky.us

MAINE

Joyce Benson, State Planning Office, 184 State Street, 38 State House Station, Augusta, Maine 04333, Telephone: (207) 287–3261, (direct), Fax: (207) 287–6489, joyce.benson@state.me,us

MARYLAND

Linda Janey, Manager, State Clearinghouse and Plan Review Unit, Maryland Office of Planning, 301 West Preston Street–Room 1104, Baltimore, Maryland 21201–2305, Telephone: (410) 767–4490, Fax: (410) 767–4480, linda@mail.op.state.md.us

MICHIGAN

Richard Pfaff, Southeast Michigan Council of Governments, 660 Plaza Drive–Suite 1900, Detroit, Michigan 48226, Telephone: (313) 961–4266, Fax: (313) 961–4869, pfaff@semcog.org

MISSISSIPPI

Cathy Mallette, Clearinghouse Officer, Department of Finance and Administration, 550 High Street, 303 Walters Sillers Building, Jackson, Mississippi 39201–3087, Telephone: (601) 359–6762, Fax: (601) 359–6758

MISSOURI

Lois Pohl, Federal Assistance Clearinghouse, Office of Administration, P.O. Box 809, Jefferson Building, Room 915, Jefferson City, Missouri 65102, Telephone: (573) 751–4834, Fax: (573) 522–4395, pohll @mail.oa.state.mo.us

NEVADA

Heather Elliot, Department of Administration, State Clearinghouse, 209 E. Musser Street, Room 200, Carson City, Nevada 89701, Telephone: (775) 684–0209, Fax: (775) 684–0260, helliott@govmail.state.nv.us

NEW HAMPSHIRE

Jeffrey H. Taylor, Director, New Hampshire Office of State Planning, Attn: Intergovernmental Review Process, Mike Blake, 2½ Beacon Street, Concord, New Hampshire 03301, Telephone: (603) 271–2155, Fax: (603) 271–1728, jtaylor@osp.state.nh.us

NEW MEXICO

Ken Hughes, Local Government Division, Room 201 Bataan Memorial Building, Santa Fe, New Mexico 87503, Telephone: (505) 827–4370, Fax: (505) 827–4948, khughes@dfa.state.nm.us

NORTH CAROLINA

Jeanette Furney, Department of Administration, 1302 Mail Service Center, Raleigh, North Carolina 27699–1302, Telephone: (919) 807–2323, Fax: (919) 733–9571, jeanette.furney@ncmail.net

NORTH DAKOTA

Jim Boyd, Division of Community Services, 600 East Boulevard Ave, Dept. 105, Bismark, North Dakota 58505–0170, Telephone: (701) 328–2094, Fax: (701) 328–2308, jboyd@state.nd.us

RHODE ISLAND

Kevin Nelson, Department of Administration, Statewide Planning Program, One Capitol Hill, Providence Rhode Island 02908–5870, Telephone: (401) 222–2093, Fax: (401) 222–2083, knelson@doa.state.ri.us

SOUTH CAROLINA

Omeagia Burgess, Budget and Control Board, Office of State Budget, 1122 Ladies Street—12th Floor, Columbia, South Carolina 29201, Telephone: (803) 734–0494, Fax: (803) 734–0645, aburgess@budget.state.sc.us

TEXAS

Tom Adams, Governors Office, Director, Intergovernmental Coordination, P.O. Box 12428, Austin, Texas 78711, Telephone: (512) 436–1771, Fax: (512) 936–2681, tadams@governor.state.tx.us

UTAH

Carolyn Wright, Utah State Clearinghouse, Governor's Office of Planning and Budget, State Capitol—Room 114, Salt Lake City, Utah 84114, Telephone: (801) 538–1535, Fax: (801) 538–1547, cwright@gov.state.ut.us

WEST VIRGINIA

Fred Cutlip, Director, Community Development Division, West Virginia Development Office, Building #6, Room 553, Charleston, West Virginia 25305, Telephone: (304) 558–4010, Fax: (304) 558–3248, fcutlip@wvdo.org

WISCONSIN

Jeff Smith, Section Chief, Federal/State Relations, Wisconsin Department of Administration, 101 East Wilson Street—6th Floor, P.O. Box 7868, Madison, Wisconsin 53707, Telephone: (608) 266–0267, Fax: (608) 267–6931, jeffrey.smith@doa.state.wi.us

WYOMING

Sandy Ross, Department of Administration and Information, 2001 Capitol Avenue, Room 214, Cheyenne, WY 82002, Telephone: (307) 777–5492, Fax: (307) 777–3696, sross1;@missc.state.wy.us

GUAM

Director, Bureau of Budget and Management Research, Office of the Governor, P.O. Box 2950, Agana, Guam 96910, Telephone: 011–671–472–2285, Fax: 011–472–2825, jer@ns.gov.gu

PUERTO RICO

Norma Burgos/Jose E. Caro, Puerto Rico Planning Board, Federal Proposals Review Office, Minillas Government Center, P.O. Box 41119, San Juan, Puerto Rico 00940–1119, Telephone: (809) 727–4444, (809) 723–6190, Fax: (809) 724–3270

NORTH MARIANA ISLANDS

Ms. Jacoba T. Seman, Federal Programs Coordinator, Office of Management and Budget, Office of the Governor, Saipan, MP 96950, Telephone: (670) 664–2289, Fax: (670) 664–2272, omb.jseman@saipan.com

VIRGIN ISLANDS

Ira Mills, Director, Office of Management and Budget, #41 Norre Gade Emancipation Garden Station, Second Floor, Saint Thomas, Virgin Islands 00802, Telephone: (340) 774–0750, Fax: (340) 776–0069, lrmills@usvi.org

Changes to this list can be made only after OMB is notified by a State's officially designated representative. E-mail messages can be sent to *grants@omb.epo.gov*. If you prefer, you may send correspondence to the following postal address:

Attn: Grants Management, Office of Management and Budget, New Executive Office Building, Suite 6025, 725 17th Street, NW., Washington, DC 20503.

Certification Regarding Lobbying—Attachment H

The undesigned certifies, to the best of his or her knowledge and belief, that:

(1) No Federal appropriated funds have been paid or will be paid, by or on behalf of the undersigned, to any person for influencing or attempting to influence an officer or employee of an agency, a Member of Congress, an officer or employee of Congress, or an employee of a Member of Congress in connection with the awarding of any Federal contract, the making of any Federal grant, the making of any Federal loan, the entering into of any cooperative agreement, and the extension, continuation, renewal, amendment, or modification of any Federal contract, grant, loan, or cooperative agreement.

(2) If any funds other than Federal appropriated funds have been paid or will be paid to any person for influencing or attempting to influence an officer or employee of any agency, a Member of Congress, an officer or employee of Congress, or an employee of a Member of Congress in connection with this Federal contract, grant, loan, or cooperative agreement, the undersigned shall complete and submit Standard Form–LLL, ''Disclosure Form to Report Lobbying,'' in accordance with its instructions.

(3) The undersigned shall require that the language of this certification be included in the award documents for all subawards at all tiers (including subcontracts, subgrants, and contracts under grants, loans, and cooperative agreements) and that all subrecipients shall certify and disclose accordingly. This certification is a material representation of fact upon which reliance was placed when this transaction was made or entered into. Submission of this certification is a prerequisite for making or entering into this transaction imposed by section 1352, title 31, U.S. Code. Any person who fails to file the required certification shall be subject to a civil penalty of not less than $10,000 and not more than $100,000 for each such failure.

Statement for Loan Guarantees and Loan Insurance

The undersigned states, to the best of his or her knowledge and belief, that:

If any funds have been paid or will be paid to any person for influencing or attempting to influence an officer or employee of any agency, a Member of Congress, an officer or employee of Congress, or an employee of a Member of Congress in connection with this commitment providing for the United States to insure or guarantee a loan, the undersigned shall complete and submit Standard Form–LLL, ''Disclosure Form to Report Lobbying,'' in accordance with its instructions. Submission of this statement is a prerequisite for making or entering into this transaction imposed by section 1352, title 31, U.S. Code. Any person who fails to file the required statement shall be subject to a civil penalty of not less than $10,000 and not more than $100,000 for each such failure.

Signature

Title

Organization

BILLING CODE 4184–01–P

DISCLOSURE OF LOBBYING ACTIVITIES Attachment H, Page 2

Approved by OMB 0348-0046

Complete this form to disclose lobbying activities pursuant to 31 U.S.C. 1352
(See reverse for public burden disclosure.)

1. Type of Federal Action:	2. Status of Federal Action:	3. Report Type:
☐ a. contract b. grant c. cooperative agreement d. loan e. loan guarantee f. loan insurance	☐ a. bid/offer/application b. initial award c. post-award	☐ a. initial filing b. material change **For Material Change Only:** year _____ quarter _____ date of last report _____

4. Name and Address of Reporting Entity:	5. If Reporting Entity in No. 4 is a Subawardee, Enter Name and Address of Prime:
☐ Prime ☐ Subawardee Tier _____, *if known*: Congressional District, *if known*:	Congressional District, *if known*:
6. Federal Department/Agency:	**7. Federal Program Name/Description:** CFDA Number, *if applicable*: _____
8. Federal Action Number, *if known*:	**9. Award Amount,** *if known*: $
10. a. Name and Address of Lobbying Registrant (*if individual, last name, first name, MI*):	**b. Individuals Performing Services** (*including address if different from No. 10a*) (*last name, first name, MI*):
11. Information requested through this form is authorized by title 31 U.S.C. section 1352. This disclosure of lobbying activities is a material representation of fact upon which reliance was placed by the tier above when this transaction was made or entered into. This disclosure is required pursuant to 31 U.S.C. 1352. This information will be reported to the Congress semi-annually and will be available for public inspection. Any person who fails to file the required disclosure shall be subject to a civil penalty of not less that $10,000 and not more than $100,000 for each such failure.	Signature: _____ Print Name: _____ Title: _____ Telephone No.: _____ Date: _____
Federal Use Only:	Authorized for Local Reproduction Standard Form LLL (Rev. 7-97)

BILLING CODE 4184–01–C

Instructions for Completion of SF–LLL, Disclosure of Lobbying Activities

This disclosure form shall be completed by the reporting entity, whether subawardee or prime Federal recipient, at the initiation or receipt of a covered Federal action, or a material change to a previous filing, pursuant to title 31 U.S.C. section 1352. The filing of a form is required for each payment or agreement to make payment to any lobbying entity for influencing or attempting to influence an officer or employee of any agency, a Member of Congress, an officer or employee of Congress, or an employee of a Member of Congress in connection with a covered Federal action. Complete all items that apply for both the initial filing and material change report. Refer to the implementing guidance published by the Office of Management and Budget for additional information.

1. Identify the type of covered Federal action for which lobbying activity is and/or has been secured to influence the outcome of a covered Federal action.

2. Identify the status of the covered Federal action.

3. Identify the appropriate classification on this report. If this is a followup report caused by a material change to the information previously reported, enter the year and quarter in which the change occurred. Enter the date of the last previously submitted report by this reporting entity for this covered Federal action.

4. Enter the full name, address, city, State and zip code of the reporting entity. Include Congressional District, if known. Check the appropriate classification of the reporting entity that designates if it is, or expects to be, a prime or subaward recipient. Identify the tier of the subawardee, e.g., the first subawardee of the prime is the 1st tier. Subawards include but are not limited to subcontracts, subgrants and contract awards under grants.

5. If the organization filing the report in item 4 checks ''Subawardee,'' then enter the full name, address, city, State and zip code of the prime Federal recipient. Include Congressional District, if known.

6. Enter the name of the Federal agency making the award or loan commitment. Include at least one organizational level below agency name, if known. For example, Department of Transportation, United States Coast Guard.

7. Enter the Federal program name or description for the covered Federal action (item 1). If known, enter the full Catalog of Federal Domestic Assistance (CFDA) number for grants, cooperative agreements, loans, and loan commitments.

8. Enter the most appropriate Federal identifying number available for the Federal action identified in item 1 (e.g., Request for Proposal (RFP) number; Invitation for Bid (IFB) number; grant announcement number; the contract), grant, or loan award number; the application/proposal control number assigned by the Federal agency). Include prefixes, e.g., ''RFP–DE–90–001.''

9. For a covered Federal action where there has been an award or loan commitment by the Federal agency, enter the Federal amount of the award/loan commitment for the prime entity identified in item 4 or 5.

10. (a) Enter the full name, address, city, State and zip code of the lobbying registrant under the Lobbying Disclosure Act of 1995 engaged by the reporting entity identified in item 4 to influence the covered Federal action.

(b) Enter the full names of the individual(s) performing services, and include full address if different from 10(a). Enter Last Name, First Name, and Middle Initial (MI).

11. The certifying official shall sign and date the form, print his/her name, title, and telephone number.

According to the Paperwork Reduction Act, as amended, no persons are required to respond to a collection of information unless it displays a valid OMB Control Number. The valid OMB control number for this information collection is OMB No. 0348–0046. Public reporting burden for this collection of information is estimated to average 10 minutes per response, including time for reviewing instructions, searching existing data sources, gathering and maintaining the data needed, and completing and reviewing the collection of information. Send comments regarding the burden estimate or any other aspect of this collection of information, including suggestions for reducing this burden, to the Office of Management and Budget, Paperwork Reduction Project (0348–0046), Washington, DC 20503.

State Human Services Administrators—Attachment I

Indexed by State Name

A

Mr. Tony Petelos, Commissioner, Alabama State Department of Human Resources, 50 Ripley Street, Montgomery, AL 36130–4000, Phone: (334) 242–1160, FAX: (334) 242–0198

Ms. Karen Perdue, Commissioner, Alaska Department of Health and Social Services, P.O. Box 110601, Juneau, AK 99811–0601, Phone: (907) 465–3030, FAX: (907) 465–3068

Ms. Marie Ma'o, Director, American Samoa Department of Social Services, Pago Pago, AS 96799, Phone: 011 (684) 633–2969, FAX: 011 (684) 633–7449

Mr. John L. Clayton, Director, Arizona Department of Economic Security, P.O. Box 6123, Site Code 010A, Phoenix, AZ 85005, Phone: (602) 542–5678, FAX: (602) 542–5339

Mr. Kurt Knickrehm, Director, Arkansas Department of Human Services, P.O. Box 1437—Suite 329, Little Rock, AR 72203–1437, Phone: (501) 682–8650

C

Mr. Grantland Johnson, Secretary, California Health and Welfare Agency, 1600 Ninth Street, Room 460, Sacramento, CA 95814, Phone: (916) 654–3345, FAX: (916) 654–3343

Mrs. Marva Livingston Hammons, Executive Director, Colorado Department of Human Services, 1575 Sherman Street, 8th floor, Denver, CO 80203–1714, Phone: (303) 866–5096, FAX: (303) 866–4740

Ms. Patricia A. Wilson-Coker, Commissioner, Connecticut Department of Social Services, 25 Sigourney Street, Hartford, CT 06106, Phone: (860) 424–5008, FAX: (860) 424–4960

D

Dr. Gregg C. Sylvester, Secretary, Delaware Department of Health & Social Services, Herman M. Holloway Campus, Administration Building, 1st floor, 1901 N. DuPont Highway, New Castle, DE 19720, Phone: (302) 577–4500, FAX: (302) 577–4510

Mrs. Carolyn Graham, Director, D.C. Department of Human Services, East Building, Suite 801, 2700 Martin Luther King, Jr. Avenue, Washington, DC 20032–0247, Phone: (202) 279–6002, FAX: (202) 279–6014

F

Judge Kathleen Kearney, Secretary, Florida Department of Children and Families, Building 1, Room 202, 1317 Winewood Boulevard, Tallahassee, FL 32399–0700, Phone: (850) 487–1111, FAX: (850) 922–2993

Mr. Robert G. Brooks, Secretary, Florida Department of Health, Building 6, Room 306, 1317 Winewood Boulevard, Tallahassee, FL 32399–0700, Phone: (850) 487–2945, FAX: (850) 487–3729

G

Ms. Audrey W. Horne, Commissioner, Georgia Department of Human Resources, 2 Peach Tree Street, N.W., Suite 29–250, Atlanta, GA 30303, Phone: (404) 656–5680, FAX: (404) 651–8669

Mr. Dennis G. Rodriguez, Director, Guam Department of Public Health and Social Services, P.O. Box 2816, Agana, GU 96932, Phone: 011 (671) 734–7102, FAX: 011 (671) 734–5910

H

Ms. Susan Chandler, Director, Hawaii Department of Human Services, P.O. Box 339, Honolulu, HI 96809–0339, Phone: (808) 586–4997, FAX: (808) 586–4890

I

Mr. Karl B. Kurtz, Director, Idaho Department of Health and Welfare, P.O. Box 83720, Boise, ID 83720–0036, Phone: (208) 334–5500, FAX: (208) 334–6558

Ms. Linda Renee Baker, Secretary, Illinois Department of Human Services, Harris Building, 3rd floor, 100 South Grand Avenue, East, Springfield, IL 62762, Phone: (217) 557–1602, FAX: (217) 557–1647

Dr. Peter Sybinsky, Secretary, Indiana Family and Social Services Administration, 402 West Washington Street, Room W–461, Indianapolis, IN 46204, Phone: (317) 233–4690, FAX: (317) 233–4693

Ms. Jessie Rasmussen, Director, Iowa Department of Human Services, 5th floor, Hoover State Office Building, Des Moines, IA 50319, Phone: (515) 281–5452, FAX: (515) 281–4597

K

Ms. Janet Schalansky, Secretary, Kansas Department of Social and Rehabilitation Services, Docking State Office Building,

6th Floor, 915 Harrison Street, Topeka, KS 66612–1570, Phone: (913) 296–3271, FAX: (913) 296–4685

Ms. Viola P. Miller, Secretary, Kentucky Cabinet for Families and Children, 275 East Main Street, 4th floor West, Frankfort, KY 40621, Phone: (502) 564–7130, FAX: (502) 564–3866

L

Mrs. J. Renea Austin-Duffin, Secretary, Louisiana Department of Social Services, P.O. Box 3776, Baton Rouge, LA 70821, Phone: (504) 342–0286, FAX: (504) 342–8636

M

Mr. Kevin W. Concannon, Commissioner, Maine Department of Human Services, 11 Statehouse Station, 2100 State Street, Augusta, ME 04333, Phone: (207) 287–2736, FAX: (207) 287–3005

Ms. Lynda G. Fox, Secretary, Maryland Department of Human Resources, Saratoga State Center, 311 West Saratoga Street, Baltimore, MD 21201, Phone: (410) 767–7109, FAX: (410) 333–0099

Mr. William O'Leary, Commissioner, Massachusetts Department of Social Services, 24 Farnsworth Street, Boston, MA 02210, Phone: (617) 727–0900, FAX: (617) 439–4482

Mr. Douglas Howard, Director, Michigan Family Independence Agency, 235 South Grand Avenue, Lansing, MI 48909, Phone: (517) 373–2000, FAX: (517) 335–6101

Mr. Michael O'Keefe, Commissioner, Minnesota Department of Human Services, 444 Lafayette Road, St. Paul, MN 55155–3815, Phone: (612) 296–2701, FAX: (612) 296–5868

Ms. Bettye Ward Fletcher, Ph.D., Executive Director, Mississippi Department of Human Services, 750 North State Street, Jackson, MS 39202, Phone: (601) 359–4480, FAX: (601) 359–4477

Mr. Gary J. Stangler, Director, Missouri Department of Social Services, Broadway State Office Building, 221 W. High Street, Jefferson City, MO 65102, Phone: (573) 751–4815, FAX: (573) 751–3203

Ms. Laurie Ekanger, Director, Montana Department of Public Health and Human Services, P.O. Box 4210, Helena, MT 59604–4210, Phone: (406) 444–5622, FAX: (406) 444–1970

N

Mr. Ron Ross, Director, Nebraska Department of Health and Human Services, P.O. Box 59604, Lincoln, NE 68509–5044, Phone: (402) 471–9106, FAX: (402) 471–0820

Ms. Charlotte Crawford, Director, Nevada Department of Human Resources, 505 East King Street, Suite 600, Carson City, NV 89710, Phone: (702) 687–4400, FAX: (702) 687–4733

Mr. Donald L. Shumway, Commissioner, New Hampshire Department of Health and Human Services, 6 Hazen Drive, Concord, NH 03301, Phone: (603) 271–4331, FAX: (603) 271–4912

Ms. Michelle Guhl, Commissioner, New Jersey Department of Human Services, P.O. Box 700, Trenton, NJ 08625–0700, Phone: (609) 292–3717, FAX: (609) 292–3824

Ms. Robin Dozier Otten, Deputy Secretary, New Mexico Human Services Dept., P.O. Box 2348, Santa Fe, NM 87504–2348, Phone: (505) 827– 7750, FAX: (505) 827–6286

Mr. Brian Wing, Commissioner, New York State Office of Temporary and Disability Assistance, 40 North Pearl Street, Albany, NY 12243, Phone: (518) 474–9475, FAX: (518) 486–6255

Mr. John A. Johnson, Commissioner, New York State Office of Children and Family Services, 52 Washington Street, Rensselaer, NY 12144, Phone: (518) 473–8437, FAX: (518) 473–9131

Dr. H. David Bruton, Secretary, North Carolina Department of Heath and Human Services, 101 Blair Drive, Raleigh, NC 27626, Phone: (919) 733–4534, FAX: (919) 715–4645

Ms. Carol K. Olson, Executive Director, North Dakota department of Human Services, State Capitol—Judicial Wing, 600 East Boulevard, Bismarck, ND 58505, Phone: (701) 328–2310, FAX: (701) 328–1545

O

Ms. Jacqueline Romer-Sensky, Director, Ohio Department of Human Services, 30 East Broad Street, 32nd Floor, Columbus, OH 43266-0423, Phone: (614) 466–6282, FAX: (614) 466–2815

Mr. Howard A. Hendrick, Director, Oklahoma Department of Human Services, P.O. Box 25352, Oklahoma City, OK 73125–0352, Phone: (405) 521–3646, FAX: (405) 521–6458

Mr. Gary Weeks, Director, Oregon Department of Human Resources, 500 Summer Street, N.E., Salem, OR 97310–1012, Phone: (503) 945–5944, FAX: (503) 378–2897

P

Ms. Feather O. Houstoun, Secretary, Pennsylvania Department of Public Welfare, P.O. Box 2675, Harrisburg, PA 17105–2675, Phone: (717) 787–2600, FAX: (717) 772–2062

Ms. Angie Varela-Llavona, Secretary, Puerto Rico Department of The Family, P.O. Box 11398, San Juan, PR 00910–1398, Phone: (787) 725–4511, FAX: (787) 723–1223

R

Ms. Christine Ferguson, Director, Rhode Island Department of Human Services, 600 New London Avenue, Cranston, RI 02920, Phone: (401) 464–2121, FAX: (401) 464–3677

S

Elizabeth G. Patterson, Director, South Carolina Department of Social Services, P.O. Box 1520, Columbia, SC 29202–1520, Phone: (803) 898–7360, FAX: (803) 898–7276

Mr. John Jones, Secretary, South Dakota Department of Human Services, Hillsview Plaza, East Highway 34, Pierre, SD 57501, Phone: (605) 773–5990, FAX: (605) 773–5483

T

Ms. Natsha Metcalf, Commissioner, Tennessee Department of Human Services, Citizens Plaza Building, 15th Floor, 400 Deaderick Street, Nashville, TN 37248–0200, Phone: (615) 313–4700, FAX: (615) 741–4165

Mr. Eric M. Bost, Commissioner, Texas Department of Human Services, P.O. Box 149030, Mail Code W–619, Austin, TX 78714–9030, Phone: (512) 438–3030, FAX: (512) 438–4220

Ms. Diane D. Rath, Chair and Commissioner Representing the Public, Texas Work Force Commission, 101 East 15th Street, Austin, TX 78778, Phone: (512) 463–2800, FAX: (512) 463–1289

U

Mrs. Robin Arnold-Williams, Executive Director, Utah Department of Human Services, 120 North 200 West, Room 319, Salt Lake City, UT 84114–0250, Phone: (801) 538–3998, FAX: (801) 538–4016

Mr. Robert C. Gross, Executive Director, Utah Department of Workforce Services, 140 E. 300 South, Salt Lake City, UT 84103, Phone: (801) 526–9210, FAX: (801) 526–9211

V

Ms. M. Jane Kitchel, Secretary, Vermont Agency of Human Services, 103 South Main Street, Waterbury, VT 05671–0204, Phone: (802) 241–2220, FAX: (802) 241–2979

Ms. Sedonia Halbert, Acting Commissioner, Virgin Islands Department of Human Services, Knud Hansen Complex Building A, 1303 Hospital Grounds, St. Thomas, VI 00802, Phone: (304) 774–0930, FAX: (304) 774–3466

Ms. Sonia Rivero, Commissioner, Virginia Department of Social Services, 730 East Broad Street, 9th floor, Richmond, VA 23219–1849, Phone: (804) 692–1900, FAX: (804) 692–1964

W

Mr. Lyle Quasim (retires 6/30), Secretary, Washington Department of Social and Health Services, 115 Washington Street, SE, Olympia, WA 98504–5010, Phone: (360) 902–7800, FAX: (360) 902–7848

Ms. Joan E. Ohl, Secretary, West Virginia Department of Health and Human Resources, State Capitol Complex Building 3, Room 206, 1900 Kanawha Boulevard, East, Charleston, WV 25305–0500, Phone: (304) 558–0684, FAX: (304) 559–1130

Mr. Joseph Leean, Secretary, Wisconsin Department of Health and Family Services, P.O. Box 7850, Madison, WI 53707–7850, Phone: (608) 266–9622, FAX: (608) 266–7882

Ms. Keri Jo Gray, Director, Wyoming Department of Family Services, Hathaway Building, 3rd floor, 2300 Capitol Avenue, Cheyenne, WY 82002–0490, Phone: (307) 777–7561, FAX: (307) 777–7747

Certification Regarding Environmental Tobacco Smoke—Attachment J

Public Law 103227, Part C Environmental Tobacco Smoke, also known as the Pro Children Act of 1994, requires that smoking not be permitted in any portion of any indoor routinely owned or leased or contracted for by an entity and used routinely or regularly for provision of health, day care, education, or library services to children under the age

of 18, if the services are funded by Federal programs either directly or through State or local governments, by Federal grant, contract, loan, or loan guarantee. The law does not apply to children's services provided in private residences, facilities funded solely by Medicare or Medicaid funds, and portions of facilities used for inpatient drug or alcohol treatment. Failure to comply with the provisions of the law may result in the imposition of a civil monetary penalty of up to $1000 per day and/or the imposition of an administrative compliance order on the responsible entity. By signing and submitting this application the applicant/grantee certifies that it will comply with the requirements of the Act.

The applicant/grantee further agrees that it will require the language of this certification be included in any subawards which contain provisions for the children's services and that all subgrantees shall certify accordingly.

DHHS Regulations Applying to All Applicants/Grantees Under the Job Opportunities for Low-Income Individuals (JOLI) Program—Attachment K

Title 45 of the Code of Federal Regulations:

Part 16—Department of Grant Appeals Process
Part 74—Administration of Grants (grants and subgrants to entities)
Part 75—Informal Grant Appeal Procedures
Part 76—Debarment and Suspension from Eligibility for Financial Assistance

SUBPART F—DRUG FREE WORKPLACE REQUIREMENTS

Part 80—Non-Discrimination Under Programs Receiving Federal Assistance through the Department of Health and Human Services Effectuation of Title VI of the Civil Rights Act of 1964
Part 81—Practice and Procedures for Hearings Under Part 80 of this Title
Part 83—Regulation for the Administration and Enforcement of Sections 799A and 845 of the Public Health Service Act
Part 84—Non-discrimination on the Basis of Handicap in Programs and Activities Receiving Federal Financial Assistance
Part 85—Enforcement of Non-Discrimination on the Basis of Handicap in Programs or Activities Conducted by the Department of Heath and Human Services
Part 86—Nondiscrimination on the Basis of Sex in Education Programs and Activities Receiving or Benefiting from Federal Financial Assistance
Part 91—Non-discrimination on the Basis of Age in Health and Human Services Programs or Activities Receiving Federal Financial Assistance
Part 92—Uniform Administrative Requirements for Grants and Cooperative Agreements to States and Local Governments (**Federal Register**, March 11, 1988)
Part 93—New Restrictions on Lobbying
Part 100—Intergovernmental Review of Department of Health and Human Services Programs and Activities

Business Plan—Attachment L

The business plan is one of the major components that will be evaluated by OCS to determine the feasibility of a jobs creation project. A business plan must be included if, the applicant is proposing to establish a new identified business, of if the applicant will be providing assistance to a private third party employer for the development or expansion of a pre-identified business.

The following guidelines were written to cover a variety of possibilities regarding the requirements of a business plan. Rigid adherence to them is not possible nor even desirable for all projects. For example, a business plan for a service business would not require discussion of manufacturing nor product designs. Therefore, the business plans should be prepared in accordance with the following guidelines:

1. *The business and its industry.* This section should describe the nature and history of the business and include background on its industry.

a. *The Business:* as a legal entity; the general business category;

b. *Description and Discussion of Industry:* Current status and prospects for the industry.

2. *Products and Services:* This section deals with the following:

a. *Description:* Describe in detail the products or services to be sold;

b. *Proprietary Position:* Describe proprietary features, if any, of the product, e.g., patents, trade secrets; and,

c. *Potential:* Features of the product or service that may give it an advantage over the competition.

3. *Market Research and Evaluation:* This section should present sufficient information to show that the product or service has a substantial market and can achieve sales in the face of competition;

a. *Customers:* Describe the actual and potential purchasers for the product or service by market segment;

b. *Market Size and Trends:* State the size of the current total market for the product or service offered;

c. *Competition:* An assessment of the strengths and weaknesses of competitive products and services; and

d. *Estimated Market Share and Sales:* Describe the characteristics of the product or service that will make it competitive in the current market.

4. *Marketing Plan:* The marketing plan must describe what is to be done, how it will be done and who will do it. The marketing plan should detail the product, pricing, distribution, and promotion strategies that will be used to achieve the estimated market share and sales projections. The plan should address the following topics—Overall Marketing Strategy, Packaging, Service and Warranty, Pricing, Distribution and Promotion.

5. *Design and Development Plans:* This section of the plan should cover items such as Development Status, Tasks, Difficulties and Risks, Product Improvement, New Products and Costs. If the product, process or service of the proposed venture requires any design and development before it is ready to be placed on the market, the nature and extent and cost of this work should be fully discussed.

6. *Manufacturing and Operations Plan:* A manufacturing and operations plan should describe the kind of facilities, plant location, space, capital equipment and labor force (part and/or full time and wage structure) that are required to provide the company's product or service.

7. *Management Team:* This section must include a description of: the key management personnel and their primary duties; compensation and/or ownership; the organizational structure; Board of Directors; management assistance and training needs; and supporting professional services. The management team is key in starting and operating a successful business. The management team should be committed with a proper balance of technical, managerial and business skills, and experience in operating the proposed business.

8. *Overall Schedule:* This section must include a month-by-month schedule that shows the timing of such major events, activities and accomplishments involving product development, market planning, sales programs, and production and operations. Sufficient detail should be included to show the correlation between the timing of the primary tasks required to accomplish each activity.

9. *Critical Risks and Assumptions:* This section should include a description of the risks and critical assumptions/problems relating to the industry, the venture, its personnel, the product's market appeal, and the timing and financing of the venture. Identify and discuss the critical assumptions/problems to overcome in the business Plan. Major problems must clearly identify problems to be solved to develop the venture.

10. *Community Benefits:* The applicant should describe how the proposed project will contribute to the local economy, community and human economic development within the projects target area.

11. *The Financial Plan:* The Financial Plan is basic to the development of a Business Plan. Its purpose is to indicate the project's potential and the timetable for financial self-sufficiency of the business. In developing the Financial Plan, the following exhibits must be prepared for the first three years of the business' operation:

a. Profit and Loss Forecasts-quarterly for each year;

b. Cash Flow Projections-quarterly for each year;

c. Pro forma balance sheets-quarterly for each year;

d. Initial sources of project funds;

e. Initial uses of project funds; and

f. Any future capital requirements and sources.

12. *Facilities:* If rearrangement or alteration of existing facilities is required to implement the project, the applicant must describe and justify such changes and related costs.

BILLING CODE 4184–01–P

Attachment M

CERTIFICATION REGARDING MAINTENANCE OF EFFORT

In accordance with the applicable program statute(s) and regulation(s), the undersigned certifies that financial assistance provided by the Administration for Children and Families, for the specified activities to be performed under

the _____ Program

by _____ (Applicant Organization), will be in addition to, and not in substitution for, comparable activities previously carried on without Federal assistance.

_____
Signature of Authorized Certifying Official

_____
Title

_____
Date

Back Home

BILLING CODE 4184–01–C

OCSE IV–D Report

ALABAMA

Carolyn Lapsley, Director, Department of Human Resources, Division of Child Support, 50 Ripley Street Road, Montgomery, AL 36130–1801, IVD Director's Phone: (334) 242–9300 IVD Director's Fax: (334) 242–0606, In State Office Phone: 1–800–284–4347 (334) 242–9300, Nationwide Office Phone: Office Fax: (334–242–0606, *E-Mail: clapsley@dhr.state.al.us*

ALASKA

Barbara Miklos, Director, Child Support Enforcement Division,550 West 7th Avenue, Suite 312, Anchorage, AK 99501–6699, IVD Director's Phone: (907) 269–6804 IVD Director's Fax: (907) 269–6868, In State Office Phone: (800) 478–3300 (907) 269–6813, Nationwide Office Phone: Office Fax: (907) 269–6813, *E-Mail: Barbara Miklos@revenue.state.ak.us*

AMERICAN SAMOA

Fainuulelei L Ala'ilima-Uta, Assistant Attorney General, Office of the Attorney General, P.O. Box 7, Pago Pago, AS 96799,IVD Director's Phone: (684) 633–7161 or 633–4163 IVD Director's Fax: (684) 633–1838, In State Office Phone: Nationwide Office Phone: Office Fax:

ARIZONA

Leona Hodges, Acting Director,Department of Economic Security, Division of Child Support Enforcement, P.O. Box 40458, Site Code 021A, (Street Address: 3443 N. Central Avenue, 4th Floor, Phoenix, AZ 85012), Phoenix, AZ 85067,IVD Director's Phone: (602) 274–7646 IVD Director's Fax: (602) 274–8250, In State Office Phone: (602) 252–4045, Nationwide Office Phone: Office Fax: *E-Mail: volh9834@de.state.az.us*

ARKANSAS

Dan Mc Donald, Administrator, Office of Child Support Enforcement, Division of Revenue, P.O. Box 8133, (712 W. 3rd Street ZIP 72201), Little Rock, AR 72203, IVD Director's Phone: (501) 682–6169 IVD Director's Fax: (501) 682–6002, In State Office Phone: (501) 682–8398, Nationwide Office Phone: (800) 264–2445 (payments) (800) 247–4549 (program), Office Fax: (501) 682–6002, *E-Mail: dan.mcdonald@mail.state.ar.us*

CALIFORNIA

Curtis L Child, Director, Califoornia Dept. of Child Support Svcs., P.O. Box 138006,Sacramento, CA 95814, IVD Director's Phone: (916) 654–6395 IVD Director's Fax: (916) 653–8627, In State Office Phone: (916) 654–1532 (800) 952–5253, Nationwide Office Phone: Office Fax: (916) 657–3791, *E-Mail: curtis.child@dss.ca.gov*

COLORADO

Pauline Burton, Director, Department of Human Services, Division of Child Support Enforcement, 1575 Sherman Street, 2nd floor, Denver, CO 80203–1714, IVD Director's Phone: (303) 839–1203 IVD Director's Fax: (303) 839–1332, In State Office Phone: (303) 839–5994, Nationwide Office Phone: (303) 866–2214, *E-Mail: Pauline.Burton@state.co.us*

CONNECTICUT

Diane Fray, Director, Department of Social Services, Bureau of Child Support Enforcement, 25 Sigourney Street, Hartford, CT 06105–5033, IVD Director's Phone: (860) 424–5251 IVD Director's Fax: (860) 951–2996, In State Office Phone: (860) 424–5251, Nationwide Office Phone: (800) 228–5437 (problems) (800) 647–8872 (info) (800) 698–0572 (payments), Office Fax: (860) 951–2996, *E-Mail: Diane.Fray@po.state.ct.us*

DELAWARE

Karryl D Hubbard, Director, Department of Health and Social Services, Division of Child Support Enforcement, Herman Hallaway Campus (street addr: 1901 North Dupont Hwy), P.O. Box 904, New Castle, DE 19720, IVD Director's Phone: (302) 577–4807 IVD Director's Fax: (302) 577–4873, In State Office Phone: (302) 577–4863, (302) 577–4800, Nationwide Office Phone:, Office Fax: (302) 577–4873, *E-Mail: Khubbard@state.de.us*

DISTRICT OF COLUMBIA

Phil Browning, Director, Office of Corporation Counsel, Child Support Enforcement, 441 Fourth Street NW 5th Floor, Washington, DC 20001, IVD Director's Phone: (202) 724–2131 IVD Director's Fax: (202) 724–3710, In State Office Phone: (202) 724–1444, Nationwide Office Phone:, Office Fax:, *E-Mail: DCIVD Browning@hotmail.com*

FLORIDA

Lillie Bogan, Program Director, Department of Revenue, Child Support Enforcement Program, P.O. Box 8030, Tallahassee, FL 32314–8030, IVD Director's Phone: (850) 488–8733 IVD Director's Fax: (850) 921–0792, In State Office Phone: (850) 922–9590, Office Fax: (850) 414–1698, *E-Mail: boganl@dor.state.fl.us*

GEORGIA

Martin D ''Dan'' Elmore, Director CSE, Department of Human Resources, Child Support Enforcement, P.O. Box 38450, (2 Peachtreee Street, N.W., Suite 15–107, Zip 30303), Atlanta, GA 30334–0450, IVD Director's Phone: (404) 657–3851/3856 IVD Director's Fax: (404) 657–3326, In State Office Phone: (404) 657–3851 (800) 227–7993 (for area codes 706 and 912) (for 404 and 770 dial c, Nationwide Office Phone:, Office Fax: (404) 657–3326, *E-Mail: mdelmore@dhr.state.ga.us*

GUAM

Kathleen E Maher, Deputy Attorney General, Department of Law, Child Support Enforcement Unit, 238 Archbishop F. C. Flores Street, Agana, GU 96910, IVD Director's Phone: (671) 475–3360/3363 IVD Director's Fax: (617) 477–6118, In State Office Phone: 011 (671) 475–3360, Nationwide Office Phone:, Office Fax:, *E-Mail: KathyMaher@Hotmail.com*

HAWAII

Mike L Meaney, Administrator, Department of Attorney General, Child Support Enforcement Agency, Kakuhihewa State Office Building, Kapolei, HI 96707, IVD Director's Phone: (808) 692–7000 IVD Director's Fax: (808) 692–7134, In State Office Phone: (808) 587–3695, Nationwide Office Phone:, Office Fax:, *E-Mail: csea-adm@pixi.com*

IDAHO

Tamara Prisock, Child Supt Proj Mgr, Department of Health and Welfare, Bureau of Child Support Services, P.O. Box 83720, (450 West State Street, 6th Floor Zip 83702), Boise, ID 83720–0036, IVD Director's Phone: (208) 334–5719 IVD Director's Fax: (208) 334–5817, In State Office Phone: (208) 334–2479, Nationwide Office Phone: (800) 356–9868, Office Fax: (208) 334–0666, *E-Mail: Prisockt@idhw.state.id.us*

ILLINOIS

Robert Lyons, Administrator, Illinois Department of Public Aid, Division of Child Support Enforcement, 32 W. Randolph Street, Rm 923, Chicago, IL 60601, IVD Director's Phone: (217) 524–4602 IVD Director's Fax: (217) 524–4608, In State Office Phone: (217) 524–4602 (800) 447–4278, Nationwide Office Phone:, Office Fax: (217) 524–4608, *E-Mail: AIDD5107@DPA084R2.state.il.us*

INDIANA

Joe Mamlin, Director, Child Support Bureau, 402 West Washington Street, Rm W360, Indianapolis, IN 46204, IVD Director's Phone: (317) 232–4877 IVD Director's Fax: (317) 233–4925, In State Office Phone: (317) 223–5437, Nationwide Office Phone:, Office Fax: (317) 233–4932, *E-Mail: jmamlin@fssa.state.in.us*

IOWA

Nancy Thoma, Chief, Department of Human Services, Bureau of Collections, Hoover Building—5th Floor, Des Moines, IA 50309, IVD Director's Phone: (515) 281–8886 IVD Director's Fax: (515) 281–8854, In State Office Phone: (515) 281–5580, Nationwide Office Phone:, Office Fax: (515) 281–8854, *E-Mail: nthoma@dhs.state.ia.us*

KANSAS

James A Robertson, IV–D Director, Department of Social & Rehabilitation Services, Child Support Enforcement Program, P.O. Box 497, (Street Address: 300 S.W. Oakley Street, Biddle Bldg, Topeka, KS 66606), Topeka, KS 66601, IVD Director's Phone: (785) 296–3237 IVD Director's Fax: (785) 296–5206, In State Office Phone: (913) 296–3237, Nationwide

Office Phone: (800) 432–0152 (withholding) (800) 570–6743 (collections) (800) 432–3913 (fraud hot), Office Fax: (913) 296–5206, *E-Mail: jaxr@srskansas.org*

KENTUCKY

Steven P Veno, Director, Cabinet for Human Resources, Division of Child Support Enforcement, 275 East Main Street, Frankfort, KY 40621, IVD Director's Phone: (502) 564–2285 ex 404 IVD Director's Fax: (502) 564–5988, In State Office Phone: (502) 564–2285, Nationwide Office Phone:, Office Fax: (502) 564–5988, *E-Mail: steven.veno@mail.state.ky.us*

LOUISIANA

Gordon Hood, Director, Support Enforcement Services, Office of Family Support, P.O. Box 94065, Baton Rouge, LA 70804–4065, IVD Director's Phone: (225) 342–4780 IVD Director's Fax: (225) 342–7397, In State Office Phone: (225) 342–4780 (800) 256–4650 (payments), Nationwide Office Phone:, Office Fax: (504) 342–7397, *E-Mail: ghood@dss.state.la.us*

MAINE

Stephen L Hussey, Director, Dept of Human Services, Bureau of Family Independence, Div of Support Enforcement and Recovery, State House Station, Augusta, ME 04333, IVD Director's Phone: (207) 287–2886 IVD Director's Fax: (207) 287–5096, In State Office Phone: (207) 287–2886 (800) 371–3101, Nationwide Office Phone:, Office Fax: (207) 287–2886, *E-Mail: stephen.L.hussey@state.me.us*

MARYLAND

Theresa Kaiser, Executive Director, Child Support Enforcement Administration, 311 West Saratoga Street, Baltimore, MD 21201, IVD Director's Phone: (410) 767–7674 or 7358 IVD Director's Fax: (410) 333–8992, In State Office Phone: (410) 767–7619 (800) 332–6347, Nationwide Office Phone:, Office Fax: (410) 333–8992, *E-Mail: TKaiser@csea.dhr.state.md.us*

MASSACHUSETTS

Rosemarie Day, Deputy Commissioner, Department of Revenue, Child Support Enforcement Division, 141 Portland Street, Cambridge, MA 02139–1937, IVD Director's Phone: (617) 577–7200 ex 30482 or 30405 IVD Director's Fax: (617) 621–4991, In State Office Phone: (617) 577–7200, Nationwide Office Phone: (800) 332–2733, Office Fax: (617) 621–4991, *E-Mail: dayr@dor.state.ma.us*

MICHIGAN

Wallace Dutkowski, Director, Family Independency Agency, Office of Child Support, P.O. Box 30478, (Street Address: 7109 W. Saginaw Hwy., Lansing, MI), Lansing, MI 48909–7978, IVD Director's Phone: (517) 373–7570 IVD Director's Fax: (517) 373–4980, In State Office Phone: (517) 373–7570, Nationwide Office Phone:, Office Fax: (517) 373–4980, *E-Mail: dutkowskiw@state.mi.us*

MINNESOTA

Laura Kadwell, Director, Department of Human Services, Office of Child Support Enforcement, 444 Lafayette Road, 4th floor, St Paul, MN 55155–3846, IVD Director's Phone: (651) 297–8232 IVD Director's Fax: (651) 297–4450, In State Office Phone: (651) 296–2542, Nationwide Office Phone:, Office Fax: (651) 297–4450, *E-Mail: laura.kadwell@state.mn.us*

MISSISSIPPI

Alsee McDaniel, Acting Director, Department of Human Services, Division of Child Support Enforcement, P.O. Box 352, Jackson, MS 39205, IVD Director's Phone: (601) 359–4863 IVD Director's Fax: (601) 359–4415, In State Office Phone: (601) 359–4861 (800) 354–6039 (Hines, Rankin, and Madison counties), Nationwide Office Phone: (800) 434–5437, Office Fax: (601) 359–4415, *E-Mail: amcdaniel@mdhs.state.ms.us*

MISSOURI

Lynn Fallen, Acting Director, Department of Social Services, Division of Child Support Enforcement, P.O. Box 2320, (227 Metro Drive), Jefferson City, MO 65101–2320, IVD Director's Phone: (573) 751–1374 IVD Director's Fax: (573) 751–8450, In State Office Phone: (573) 751–4301, Nationwide Office Phone: (800) 859–7999, Office Fax: (573) 751–8450, *E-Mail: bbecker@mail.state.mo.us*

MONTANA

Mary Ann Wellbank, Administrator, Department of Social and Rehabilitation Services, Child Support Enforcement Division, P.O. Box 202943, (Street Address: 3075 N. Montana Ave., Suite 112, Helena, MT 59620), Helena, MT 59620, IVD Director's Phone: (406) 444–3338 IVD Director's Fax: (406) 444–1370, In State Office Phone:, (406) 442–7278 (800) 346–5437, Nationwide Office Phone: Office Fax: (406) 444–1370, *E-Mail: mwellbank@state.mt.us*

NEBRASKA

Daryl D Wusk, CSE Administrator, Department of Health and Human Services, Child Support Enforcement Office, P.O. Box 94728, West Campus Folsom and West Prospector Place, Lincoln, NE 68509–4728, IVD Director's Phone: (402) 479–5555 IVD Director's Fax: (402) 479–5543, In State Office Phone: (402) 471–9160 (800) 831–4573, Nationwide Office Phone:, Office Fax: (402) 471–9455, *E-Mail: Daryl.Wusk@hhss.state.ne.us*

NEVADA

Leland Sullivan, Chief, Child Support Enforcement Program, Nevada State Welfare Division, 2527 North Carson Street, Capitol Complex, Carson City, NV 89716, IVD Director's Phone: (775) 687–4744 IVD Director's Fax: (775) 684–8026, In State Office Phone: (775) 687–4744 (800) 922–0900, Nationwide Office Phone:, Office Fax: (775) 684–6026, *E-Mail: lsulliva@govmail.state.nv.us*

NEW HAMPSHIRE

Lloyd Peterson, Director, Office of Program Support, Office of Child Support, Health and Human Services Building, 6 Hazen Drive, Concord, NH 03301, IVD Director's Phone: (603) 271–4287 IVD Director's Fax: (603) 271–4787, In State Office Phone: (603) 271–4427 (800) 852–3345 ext 4427, Nationwide Office Phone:, Office Fax: (603) 271–4787, *E-Mail: lpeterso@dhhs.state.nh.us*

NEW JERSEY

Alisha Griffin, Director, Department of Human Services, Bureau of Child Support and Paternity Programs, Division of Family Dev, P.O. Box 716, Trenton, NJ 08625–0716, IVD Director's Phone: (609) 588–2402 IVD Director's Fax: (609) 588–3369, In State Office Phone: (609) 588–2915, Nationwide Office Phone: (800) 621–5437, Office Fax: (609) 588–2354, *E-Mail: agrifin@dhs.state.nj.us*

NEW MEXICO

Ben Silva, Director, Department: Human Services Department, Child Support Enforcement Bureau, P.O. Box 25109, (Street Address: 2025 S. Pacheco, Santa Fe, NM 87504), Santa Fe, MN 73512, IVD Director's Phone: (505) 827–7200 IVD Director's Fax: (505) 827–7285, In State Office Phone: (505) 827–7200 (800) 432–6217, Nationwide Office Phone:, Office Fax: (505) 827–7285, *E-Mail: myrna.vigil@state.nm.us*

NEW YORK

Margot Bean, Director, Acting, Office of Child Support Enforcement, Office of Temporary Assistance, (Street Address: One Commerce Plaza, Albany, NY 12260), Albany, NY 12243–0001), IVD Director's Phone: (518) 474–9081 IVD Director's Fax: (518) 486–3127, In State Office Phone: (518) 474–9081, Nationwide Office Phone: (800) 343–8859, Office Fax: (518) 486–3127, *E-Mail: margot.bean@dfa.state.ny.us*

NORTH CAROLINA

Barry A. Miller, Chief, Department of Human Resources, Division of Social Services, Child Support Enforcement Section, 100 East Six Forks Road, Raeligh, NC 27609–7750, IVD Director's Phone: (919) 420–7982 IVD Director's Fax: (919) 571–4126, In State Office Phone: (919) 571–4114 (800) 992–9457, Nationwide Office Phone:, Office Fax: (919) 571–4126, *E-Mail: barry.miller@ncmail.net*

NORTH DAKOTA

Mike Schwindt, Director, Department of Human Services, Child Support Enforcement Agency, P.O. Box 7190, (Street Address: 1929 North Washington Street, Bismarch, ND 58507–7190), Bismarch, ND 58507–7190, IVD Director's Phone: (701) 328–3582 or 5493 IVD Director's Fax: (701) 328–6575, In State Office Phone: (701) 328–3582 (800) 755–8530, Nationwide Office Phone:, Office Fax: (701) 328–5497, *E-Mail: soschm@state.nd.us*

OHIO

Judith A Cowell, Director, Department of Human Services, Office of Child Support Enforcement, 30 East Broad Street, 31st Floor, Columbus, OH 43266–0423, IVD Director's Phone: (614) 752–6561 IVD Director's Fax: (614) 752–9760, In State Office Phone: (614) 752–6561 (800) 686–1556, Nationwide Office Phone:, Office Fax: (614) 752–9760, *E-Mail: CowellJ@odhs.state.oh.us*

OKLAHOMA

Ray Weaver, Administrator, Department of Human Services, Child Support Enforcement Division, P.O. Box 53552, (Street Address: 2409 N. Kelley Avenue, Annex Building, Oklahoma City, OK 73152, Oklahoma City, OK 73152, IVD Director's Phone: (405) 552–5871 IVD Director's Fax: (405) 522–2753, In State Office Phone: (405) 552–5871, Nationwide Office Phone: (800) 522–2922, Office Fax: (405) 522–2753, *E-Mail: pamela.webster@okdhs.org*

OREGON

Kevin Aguire, IV–D Director, Department of Human Resources, Adult and Family Services Division, Oregon Child Support Program, 500 Summer St. NE, Salem, OR 97310–1013, IVD Director's Phone: (503) 945–5600 IVD Director's Fax: (503) 373–7492, In State Office Phone: (503) 378–5567 (800) 850–0288 (800) 850–9294 (rotary), Nationwide Office Phone:, Office Fax: 503) 391–5526, *E-Mail: kevin.agurre@state.or.us*

PENNSYLVANIA

Daniel Richard, Director, Department of Public Welfare, Bureau of Child Support Enforcement, P.O. Box 8018, (Street Address: 1303 North Seventh St., 17102 Commerce Bldg., 12th Floor, Harri), Harrisburg, PA 17105, IVD Director's Phone: (717) 783–5441 IVD Director's Fax: (717) 772–4926, In State Office Phone: (717) 787–3672, Nationwide Office Phone: (800) 932–0211, Office Fax: (717) 787–9706, *E-Mail: danielr@dpw.state.pa.us*

PUERTO RICO

Miguel A Verdiales, Administrator, Department of Social Services, Administration for Child Support, P.O. Box 9023349, San Juan, PR 00902–3349, IVD Director's Phone: (787) 767–1886 IVD Director's Fax: (787) 282–8324, In State Office Phone: (787) 767–1500, Nationwide Office Phone:, Office Fax: (787) 723–6187, *E-Mail: mverdiales@asume.prstar.net*

RHODE ISLAND

John F Murphy, Administrator, Department of Administration, Division of Child Support Enforcement, 77 Dorrance Street, Providence, RI 02903, IVD Director's Phone: (401) 222–2847 IVD Director's Fax: (401) 222–2887, In State Office Phone: (401) 277–2847 (800) 922–0536, Nationwide Office Phone:, Office Fax: (401) 277–6674, *E-Mail: MurphyJF@tax.state.ri.us*

SOUTH CAROLINA

Larry J McKeown, Director, Department of Social Services, Child Support Enforcement Division, P.O. Box 1469, (Street Address: 3150 Harden Street, Columbia, SC 29202–1469) Columbia, SC 29202–1469, IVD Director's Phone: (803) 737–5870 IVD Director's Fax: (803) 737–6032, In State Office Phone: (803) 737–5875 (800) 768–6779 (payments), Nationwide Office Phone: (800) 768–5858, Office Fax: (803) 737–6032, *E-Mail: lmckeown@dss.state.sc.us*

SOUTH DAKOTA

Terry Walter, Program Administrator, Department of Social Services, Office of Child Support Enforcement, 700 Governor's Drive, Suite 84, Pierre, SD 57501–2291, IVD Director's Phone: (605) 773–3641 IVD Director's Fax: (605) 773–5246, In State Office Phone: (605) 773–3641, Nationwide Office Phone:, Office Fax: (605) 773–5246, *E-Mail: Terry.Walter@State.sd.us*

TENNESSEE

Bill Duffey, Assistant Director, Department of Human Services, Child Support Services, Citizens Plaza Building, 12th Floor, 400 Deadrick Street, Nashville, TN 37248–7400, IVD Director's Phone: (615) 313–6095 IVD Director's Fax: (615) 741–4165, In State Office Phone: (615) 313–4880 (800) 874–0530 (payments), Nationwide Office Phone:, Office Fax: (615) 532–2791, *E-Mail: bduffey@mail.state.tn.us*

TEXAS

Howard Baldwin, Director, Office of the Attorney General, Child Support Division, P.O. Box 12017, (Street Address: 5500 E. Oltorf, Austin, TX 78741) Austin, TX 78711–2017, IVD Director's Phone: (512) 460–6000 IVD Director's Fax: (512) 460–6028, In State Office Phone: (512) 460–6000, Nationwide Office Phone: (800) 252–8014 Office Fax: (512) 834–9712, *E-Mail: Howard.Baldwin@oag.state.tx.us*

UTAH

James Kidder, Director, Department of Human Services, Bureau of Child Support Services, P.O. Box 45011, (515 East, 100 South, Salt Lake City, UT 84145–0011) Salt Lake, UT 84145–0011, IVD Director's Phone: (801) 536–8911 IVD Director's Fax: (801) 536–8509, In State Office Phone: (801) 536–8500, Nationwide Office Phone: (800) 257–9156, Office Fax: (801) 536–5809, *E-Mail: hsorsslc.jkidder@state.ut.us*

VERMONT

Jeffery Cohen, Director, Office of Child Support, 103 South Main Street, Waterbury, VT 05671–1901, IVD Director's Phone: (802) 241–2319 IVD Director's Fax: (802) 244–1483, In State Office Phone: (802) 244–1483, Nationwide Office Phone: (800) 786–3214, Office Fax: (802) 244–1483, *E-Mail: jeffc@wpgate1.ahs.state.vt.us*

VIRGIN ISLANDS

Cisselon D Nichols, Director, Department of Justice, Paternity and Child Support Division, Nisky Center, Suite 500, 2nd Floor, 48B–50C Krondprans Gade, St. Thomas, VI 00802, IVD Director's Phone: (340) 775–3070 IVD Director's Fax: (340) 775–3808, In State Office Phone: (340) 775–4339, Nationwide Office Phone:, Office Fax: (340) 775–9710, *E-Mail: jimncissy@worldnet.att.net*

VIRGINIA

Nathaniel Young, Jr., Director, Department of Social Services, Division of Child Support Enforcement, 730 East Broad Street, Richmond, VA 23219, IVD Director's Phone: (804) 692–1501 IVD Director's Fax: (804) 692–1543, In State Office Phone: (804) 692–1428 (800) 468–8894, Nationwide Office Phone:, Office Fax: (804) 692–1405, *E-Mail: NLY900@dcse.dss.state.va.us*

WASHINGTON

Meg Sollenberger, Director, DSHS, Division of Child Support, P.O. Box 9162, (Street Address: 712 Pear St., SE, Olymmpia, WA 98507), Olympia, WA 98507, IVD Director's Phone: (360) 664–5441 IVD Director's Fax: (360) 586–3274, In State Office Phone: (360) 664–5005, Nationwide Office Phone: (800) 457–6202, Office Fax: (206) Seattle Area Code, *E-Mail: msollenb@dshs.wa.gov*

WEST VIRGINIA

Lena S Hill, Commissioner, Department of Health & Human Resources, Bureau of Child Support Enforcement, Building 6, Room 817, State Capitol Complex, Charleston, WV 25305, IVD Director's Phone: (304) 558–3780 IVD Director's Fax: (304) 558–4092 In State Office Phone: (304) 558–3780, Nationwide Office Phone: (800) 249–3778, Office Fax: *E-Mail: lenashill@wvdhhr.org*

WISCONSIN

Susan Pfeiffer, Director, Bureau of Child Support, Division of Economic Support, P.O. Box 7935, (Street Address; 1 West Wilson Steet, Room 382, Madison, WI 53707), Madison, WI 53707–7935, IVD Director's Phone: (608) 266–9909 IVD Director's Fax: (608) 267–2824, In State Office Phone: (608) 266–9909, Nationwide Office Phone:, Office Fax: (608) 267–2824 *E-Mail: pfiefsu@dwd.state.wi.us*

WYOMING

Susan Lehman, Administrator, Department of Family Services, Child Support Enforcement Program, Hathaway Building, Rm 361, 2300 Capital Avenue, Cheyenne, WY 82002–0710, IVD Director's Phone: (307) 777–6948, IVD Director's Fax: (307) 777–3693, In State Office Phone: (307) 777–7631, Nationwide Office Phone: (800) 457–3659, Office Fax: (307) 777–3693, *E-Mail: slehma@state.wy.us*

BILLING CODE 4184–01–P

Attachment O

APPLICANT'S CHECKLIST

This checklist will assist you with preparing and assembling your application. Completing the checklist can help ensure that you do not omit key information. Because this checklist is used by many ACF programs, some of the information might not apply to your application. This checklist DOES NOT have to be completed and returned with your application.

	Yes	Included	N/A
Authorizing official read and understood Certification Regarding Debarment, Suspension, and Other Responsibility Matters?			
Authorizing official read and understood Certification Regarding Drug-Free Workplace Requirements--Grantees Other Than Individuals?			
Authorizing official read and understood Certification Regarding Environmental Tobacco Smoke?			
Application for Federal Assistance (SF 424) was completed? Proper Signature and Date for Line 18?			
Budget Information--Non-Construction Programs (SF 424A) or Budget Information--Construction Programs (SF 424C) was completed?			
Assurances-- Non-Construction Programs (SF 424B) or Assurances--Construction Programs (SF 424D) was completed? (Proper Signature and Date?)			
Certification Regarding Lobbying was completed? (Proper Signature and Date?)			
Disclosure of Lobbying Activities was completed? (Proper Signature and Date?)			
Other special certifications, assurances, and/or disclosures required under the program were completed (e.g., maintenance of effort certification)?			
Proof of nonprofit status was provided?			
Has additional information such as biographical sketch(es) with job description(s) and other additional information been attached, when required?			
For a Supplemental application, does the detailed budget only address the additional funds requested?			
Checked all budget computations for accuracy?			

FOLLOW-UP QUESTIONS

	YES	N/A
On the Application for Federal Assistance (SF 424),		
⇒ did you enter the application number issued by the sponsoring ACF office in the "Federal Identifier" block?		
⇒ did you type the 12 digit Payee EIN or PIN previously assigned to your organization by DHHS in the "Federal Identifier" block?		
⇒ is the EIN in Item #6 assigned to the organization and organizational unit named in Item #5?		
⇒ did you include city, county, state and zip code of the applicant did organization in Item #5?		
⇒ has the appropriate box been checked in Item #16?		
⇒ has the entire proposed project period been identified in Item #13?		
On the Budget Information form (SF 424A or SF 424C),		
⇒ do the totals in Section B match the totals provided in the budget and budget narrative?		

SUGGESTED ORDERING OF APPLICATION MATERIALS

FRONT MATTER			STANDARD APPLICATION FORMS			PROJECT DESCRIPTION	DISCLOSURES CERTIFICATIONS			END MATTER
COVER LETTER	Table of Contents	Project Abstract (executive summary)	SF 424	SF 424A or SF 424C	SF 424B or SF 424D	Project Descrip-tion	Certification regarding lobbying	Disclosure of lobbying activities	other Assurances and Certs	appendix resumes, letters of support, maps, etc

[FR Doc. 00–20187 Filed 8–9–00; 8:45 am]
BILLING CODE 4184–01–C

Reader Aids

Federal Register

Vol. 65, No. 155

Thursday, August 10, 2000

CUSTOMER SERVICE AND INFORMATION

Federal Register/Code of Federal Regulations

General Information, indexes and other finding aids	**202–523–5227**
Laws	**523–5227**
Presidential Documents	
Executive orders and proclamations	**523–5227**
The United States Government Manual	**523–5227**
Other Services	
Electronic and on-line services (voice)	**523–4534**
Privacy Act Compilation	**523–3187**
Public Laws Update Service (numbers, dates, etc.)	**523–6641**
TTY for the deaf-and-hard-of-hearing	**523–5229**

ELECTRONIC RESEARCH

World Wide Web

Full text of the daily Federal Register, CFR and other publications:

http://www.access.gpo.gov/nara

Federal Register information and research tools, including Public Inspection List, indexes, and links to GPO Access:

http://www.nara.gov/fedreg

E-mail

PENS (Public Law Electronic Notification Service) is an E-mail service for notification of recently enacted Public Laws. To subscribe, send E-mail to

listserv@www.gsa.gov

with the text message:

subscribe PUBLAWS-L your name

Use listserv@www.gsa.gov only to subscribe or unsubscribe to PENS. We cannot respond to specific inquiries.

Reference questions. Send questions and comments about the Federal Register system to:

info@fedreg.nara.gov

The Federal Register staff cannot interpret specific documents or regulations.

FEDERAL REGISTER PAGES AND DATE, AUGUST

46859–47242 1
47243–47652 2
47653–47824 3
47825–48134 4
48135–48346 7
48347–48600 8
48601–48884 9
48885–49188 10

CFR PARTS AFFECTED DURING AUGUST

At the end of each month, the Office of the Federal Register publishes separately a List of CFR Sections Affected (LSA), which lists parts and sections affected by documents published since the revision date of each title.

3 CFR

Proclamations:
7332 47825
Executive Orders:
12722 (See Notice of July 28, 2000) 47241
12724 (See Notice of July 28, 2000) 47241
12924 (See Notice of August 3, 2000) 48347
Administrative Orders:
Notices:
July 28, 2000 47241
August 3, 2000 48347
Presidential Determinations:
No. 00-27 of July 21, 2000 47827

5 CFR

330 47829
550 48135
595 48135
610 48135
1201 48885
1203 48885
1204 48885
1205 48886
1206 48886
1207 48886
2640 47830
Proposed Rules:
532 48641

7 CFR

97 47243
253 47831
457 47834
927 48136
929 48349
930 48139
945 48142
982 47245
1240 48318
1479 47840
Proposed Rules:
46 48185
47 48185
205 48642
305 47908
319 47908
905 46879
1240 48324
1940 47695

8 CFR

Proposed Rules:
212 46882
236 46882
241 46882

9 CFR

78 47653
93 46859
Proposed Rules:
1 47908
2 47908

10 CFR

Ch.1 47654
Proposed Rules:
431 .....48828, 48838, 48852

12 CFR

Proposed Rules:
225 47696

13 CFR

121 48601

14 CFR

11 47247
21 47247
25 .....47247, 47841
33 48887
39 .....46862, 47248, 47252, 47255, 47660, 48144, 48351, 48353, 48355, 48358, 48360, 48362, 48364, 48368, 48371, 48373, 48605, 48607
71 .....47258, 47259, 47260, 47261, 47843, 48146, 48147, 48608, 48609, 48888
97 .....48889, 48891, 48893
1204 47663
Proposed Rules:
39 .....47356, 47701, 48399, 48401, 48402, 48404, 48643, 48645, 48646, 48648, 48931, 48933, 48936, 48937, 48941, 48943, 48945, 48947, 48950
71 48651

15 CFR

287 48894

16 CFR

423 .....47261, 48148

17 CFR

1 47843
4 47848
30 47275,
230 47281
231 47281
271 47281
Proposed Rules:
240 .....47900, 48406

18 CFR

101 47664
125 48148
154 47284
161 47284
225 48148

250 47284
284 47284
330 47294
356 48148
385 47294
Proposed Rules:
342 47355

21 CFR

73 48375
172 48377
201 ....46864, 48902
310 48902
341 46864
344 48902
514 47668
868 47669
876 48609
884 47305
1308 47306
1310 ....47309, 48546

23 CFR

1335 48905

25 CFR

Proposed Rules:
0 47859
142 47704

26 CFR

1 48379
Proposed Rules:
1 ....48185, 48198

27 CFR

Proposed Rules:
9 48953

28 CFR

1 48379
91 48392

32 CFR

199 48911
310 48169
701 48170
1615 47670
1698 47670
Proposed Rules:
317 48202

33 CFR

100 ....47316, 48612, 48613
117 ....46868, 46870
165 ....47318, 47321, 48381, 48383, 48614, 48616
Proposed Rules:
84 47936
151 48548
155 48548
157 48548
158 48548
183 47936

34 CFR

600 49134
668 ....47590, 49134
674 47634
675 49134
682 ....47590, 47634, 49124, 49134
685 ....47590, 47634, 49124, 49134
690 ....47590, 49134

36 CFR

Proposed Rules:
293 48205

37 CFR

201 ....46873, 48913
202 48913
204 48913

38 CFR

Proposed Rules:
4 48205
36 46882

39 CFR

20 ....47322, 48171
111 48385
Proposed Rules:
111 47362

40 CFR

Ch. I 47323
9 48286
35 48286
52 ....46873, 47326, 47336, 47339, 47862
60 48914
63 47342
70 48391
132 47864
180 ....47874, 47877, 48617, 48620, 48626, 48634, 48637
271 48392
300 ....48172, 48930
302 47342
Ch. IV 48108
Proposed Rules:
9 49062
51 48825
52 ....47363, 47705, 48652
69 47706
80 ....47706, 48058
86 ....47706, 48058
122 49062
123 49062
124 49062
125 49062
261 48434
300 ....47363, 48210

41 CFR

Ch. 102 48392
101 48392
Proposed Rules:
101–11 48655
102–193 48655
102–194 48655
102–195 48655

42 CFR

59 49057
130 47348
410 ....47026, 47054
412 ....47026, 47054
413 ....47026, 47054, 47670
419 47670
482 47026
485 ....47026, 47054
Proposed Rules:
413 47706

46 CFR

307 47678
Proposed Rules:
25 47936
172 48548

47 CFR

0 47678
1 ....47348, 47678
2 48174
54 47882
64 ....47678, 48393
73 ....48183, 48639
74 48174
78 48174
101 48174
Proposed Rules:
1 ....47366, 48658
54 47940
73 ....47370, 48210
76 48211
78 48211

48 CFR

Ch. 15 47323
1807 46875
1819 46875

49 CFR

10 48184
Proposed Rules:
37 48444
222 46884
229 46884
393 48660
571 47945
575 46884

50 CFR

635 47214
648 ....46877, 47648
679 ....47693, 47906, 47907
Proposed Rules:
216 48669
635 ....46885, 48671

REMINDERS

The items in this list were editorially compiled as an aid to Federal Register users. Inclusion or exclusion from this list has no legal significance.

RULES GOING INTO EFFECT AUGUST 10, 2000

COMMERCE DEPARTMENT

National Institute of Standards and Technology

Accreditation and assessment programs:

Federal conformity assessment activities; policy guidance; published 8-10-00

DEFENSE DEPARTMENT

Civilian health and medical program of uniformed services (CHAMPUS):

TRICARE program—

Retiree Dental Program; expansion of dependent eligibility; published 8-10-00

ENVIRONMENTAL PROTECTION AGENCY

Superfund program:

National oil and hazardous substances contingency plan—

National priorities list update; published 8-10-00

LIBRARY OF CONGRESS

Copyright office and procedures:

General provisions and Privacy Act; technical amendments; published 8-10-00

MERIT SYSTEMS PROTECTION BOARD

Meetings; published 8-10-00

Organization and procedures; published 8-10-00

Practice and procedure:

Availability of official information; published 8-10-00

Enforcement of nondiscrimination on the basis of handicap in programs or activities; published 8-10-00

Procedures for review of rules and regulations of Office of Personnel Management; published 8-10-00

Privacy Act; amendment; published 8-10-00

SMALL BUSINESS ADMINISTRATION

Business loans:

Certified development companies—

Areas of operations; published 7-11-00

SOCIAL SECURITY ADMINISTRATION

Supplemental security income:

Aged, blind, and disabled—

Substantial gainful activity amounts; average monthly earnings guidelines; published 7-11-00

TRANSPORTATION DEPARTMENT

Federal Aviation Administration

Airworthiness standards:

Special conditions—

General Electric Aircraft Engines Models CT7-6E and CT7-8 turboshaft engines; published 8-10-00

Class D and Class E airspace; published 3-24-00

Class D and Class E airspace; correction; published 4-18-00

Class E airspace; published 3-20-00

Class E airspace; correction; published 6-9-00

Federal airways; published 7-6-00

IFR altitudes; published 7-6-00

Jet routes; published 6-14-00

Restricted areas; published 6-2-00

VOR Federal airways; published 6-2-00

COMMENTS DUE NEXT WEEK

AGRICULTURE DEPARTMENT

Animal and Plant Health Inspection Service

Plant-related quarantine, domestic:

Mexican fruit fly; comments due by 8-14-00; published 6-13-00

Pine shoot beetle; comments due by 8-18-00; published 6-19-00

AGRICULTURE DEPARTMENT

Federal Crop Insurance Corporation

Crop insurance regulations:

Millet crop; comments due by 8-18-00; published 6-19-00

COMMERCE DEPARTMENT

National Oceanic and Atmospheric Administration

Endangered Species Act:

Evaluation of conservation efforts when making listing decisions; policy; comments due by 8-14-00; published 6-13-00

ENERGY DEPARTMENT

Acquisition regulations:

Cost principles and various clauses; changes; comments due by 8-14-00; published 6-14-00

ENVIRONMENTAL PROTECTION AGENCY

Air pollution control; new motor vehicles and engines:

Heavy-duty engine and vehicle standards and highway diesel fuel sulfur control requirements; comments due by 8-14-00; published 6-2-00

Air programs; approval and promulgation; State plans for designated facilities and pollutants:

Kansas; comments due by 8-14-00; published 7-14-00

Air quality implementation plans; approval and promulgation; various States:

Arizona; comments due by 8-14-00; published 7-14-00

Illinois and Missouri; comments due by 8-14-00; published 8-3-00

Maryland; comments due by 8-18-00; published 7-19-00

Nevada; comments due by 8-14-00; published 6-14-00

Virginia; comments due by 8-18-00; published 7-19-00

Hazardous waste program authorizations:

Texas; comments due by 8-14-00; published 7-13-00

Hazardous waste:

Indentification and listing—

Mixture and derived-from rules; treatment, storage or disposal; comments due by 8-15-00; published 4-19-00

FEDERAL COMMUNICATIONS COMMISSION

Common carrier services:

Digital television broadcasting—

746-764 and 776-794 MHz bands; carriage of transmission; comments due by 8-16-00; published 7-12-00

Federal-State Joint Board on Universal Service:

Interim hold-harmless provision phasedown; comment request; comments due by 8-14-00; published 7-18-00

Radio stations; table of assignments:

New York; comments due by 8-14-00; published 8-2-00

FEDERAL RESERVE SYSTEM

Electronic fund transfers (Regulation E):

ATM operators; disclosure requirements; comments due by 8-18-00; published 7-18-00

INTERIOR DEPARTMENT

Indian Affairs Bureau

Tribal government:

Certificate of degree of Indian or Alaska Native blood; documentation requirements and filing, processing, and issuing requirements and standards

Meeting; comments due by 8-16-00; published 6-20-00

INTERIOR DEPARTMENT

Fish and Wildlife Service

Endangered and threatened species:

Black-footed ferrets; nonessential experimental population establishment in north-central South Dakota; comments due by 8-17-00; published 7-18-00

Southwestern Washington/ Columbia River coastal cutthroat trout; take prohibitions clarification; comments due by 8-14-00; published 7-14-00

Endangered Species Act:

Evaluation of conservation efforts when making listing decisions; policy; comments due by 8-14-00; published 6-13-00

INTERIOR DEPARTMENT

Surface Mining Reclamation and Enforcement Office

Permanent program and abandoned mine land reclamation plan submissions:

North Dakota; comments due by 8-16-00; published 7-17-00

Virginia; comments due by 8-14-00; published 7-14-00

JUSTICE DEPARTMENT

Immigration and Naturalization Service

Immigration:

Deportation proceedings; relief for certain aliens; comments due by 8-17-00; published 7-18-00

Nonimmigrant classes:

Temporary agricultural worker (H-2A) petitions; processing procedures; comments due by 8-14-00; published 7-13-00

LABOR DEPARTMENT

Employment and Training Administration

Aliens:

Labor certification and petition process for temporary employment of nonimmigrant aliens in U.S. agriculture; fee structure modification; comments due by 8-14-00; published 7-13-00

NATIONAL AERONAUTICS AND SPACE ADMINISTRATION

Acquisition regulations:

Risk management; comments due by 8-14-00; published 6-13-00

NATIONAL CREDIT UNION ADMINISTRATION

Credit unions:

Member information security; guidelines; comments due by 8-14-00; published 6-14-00

Organization and operations—

Chartering and field of membership policies; comments due by 8-14-00; published 6-13-00

NUCLEAR REGULATORY COMMISSION

Rulemaking petitions:

Nuclear Energy Institute; comments due by 8-14-00; published 5-31-00

SMALL BUSINESS ADMINISTRATION

Disaster loan program:

Military reservist economic injury disaster loans; comments due by 8-14-00; published 7-13-00

SOCIAL SECURITY ADMINISTRATION

Social security benefits and supplemental security income:

Federal old age, survivors, and disability insurance, and aged, blind, and disabled—

Disability and blindness determinations; growth impairment listings; comments due by 8-14-00; published 6-14-00

TRANSPORTATION DEPARTMENT

Federal Aviation Administration

Airworthiness directives:

Boeing; comments due by 8-14-00; published 6-13-00

Empresa Brasileira de Aeronautica S.A.; comments due by 8-16-00; published 7-17-00

Eurocopter Canada Ltd.; comments due by 8-18-00; published 6-19-00

Class D airspace; comments due by 8-14-00; published 7-14-00

Federal airways; comments due by 8-14-00; published 6-28-00

VOR Federal airways; comments due by 8-14-00; published 6-28-00

TRANSPORTATION DEPARTMENT

National Highway Traffic Safety Administration

Motor vehicle safety standards:

Registration of importers and importation of motor vehicles not certified as conforming to Federal safety standard; fee schedule; comments due by 8-18-00; published 7-19-00

TREASURY DEPARTMENT

Customs Service

Vessels in foreign and domestic trades:

Large yachts imported for sale; duty deferral; comments due by 8-14-00; published 6-15-00

TREASURY DEPARTMENT

Internal Revenue Service

Income taxes:

Corporate reorganizations involving disregarded entities; comments due by 8-14-00; published 5-16-00

Dollar-value last-in, first-out (LIFO) regulations; inventory price index computation method; comments due by 8-17-00; published 5-19-00

LIST OF PUBLIC LAWS

This is a continuing list of public bills from the current session of Congress which have become Federal laws. It may be used in conjunction with ''P L U S'' (Public Laws Update Service) on 202–523–6641. This list is also available online at http://www.nara.gov/fedreg.

The text of laws is not published in the **Federal Register** but may be ordered in ''slip law'' (individual pamphlet) form from the Superintendent of Documents, U.S. Government Printing Office, Washington, DC 20402 (phone, 202–512–1808). The text will also be made available on the Internet from GPO Access at http://www.access.gpo.gov/nara/index.html. Some laws may not yet be available.

S. 2327/P.L. 106–256

Oceans Act of 2000 (Aug. 7, 2000; 114 Stat. 644)

Last List August 4, 2000

Public Laws Electronic Notification Service (PENS)

PENS is a free electronic mail notification service of newly enacted public laws. To subscribe, go to www.gsa.gov/archives/publaws-l.html or send E-mail to **listserv@www.gsa.gov** with the following text message:

SUBSCRIBE PUBLAWS-L Your Name.

Note: This service is strictly for E-mail notification of new laws. The text of laws is not available through this service. **PENS** cannot respond to specific inquiries sent to this address.