AUTHENTICATED
U.S. GOVERNMENT
INFORMATION
GPO

Federal Register

5–26–00 Friday
Vol. 65 No. 103 May 26, 2000
Pages 34039–34380

The **FEDERAL REGISTER** is published daily, Monday through Friday, except official holidays, by the Office of the Federal Register, National Archives and Records Administration, Washington, DC 20408, under the Federal Register Act (44 U.S.C. Ch. 15) and the regulations of the Administrative Committee of the Federal Register (1 CFR Ch. I). The Superintendent of Documents, U.S. Government Printing Office, Washington, DC 20402 is the exclusive distributor of the official edition.

The **Federal Register** provides a uniform system for making available to the public regulations and legal notices issued by Federal agencies. These include Presidential proclamations and Executive Orders, Federal agency documents having general applicability and legal effect, documents required to be published by act of Congress, and other Federal agency documents of public interest.

Documents are on file for public inspection in the Office of the Federal Register the day before they are published, unless the issuing agency requests earlier filing. For a list of documents currently on file for public inspection, see http://www.nara.gov/fedreg.

The seal of the National Archives and Records Administration authenticates the Federal Register as the official serial publication established under the Federal Register Act. Under 44 U.S.C. 1507, the contents of the **Federal Register** shall be judicially noticed.

The **Federal Register** is published in paper and on 24x microfiche. It is also available online at no charge as one of the databases on GPO Access, a service of the U.S. Government Printing Office.

The online edition of the **Federal Register** is issued under the authority of the Administrative Committee of the Federal Register as the official legal equivalent of the paper and microfiche editions (44 U.S.C. 4101 and 1 CFR 5.10). It is updated by 6 a.m. each day the **Federal Register** is published and it includes both text and graphics from Volume 59, Number 1 (January 2, 1994) forward.

GPO Access users can choose to retrieve online **Federal Register** documents as TEXT (ASCII text, graphics omitted), PDF (Adobe Portable Document Format, including full text and all graphics), or SUMMARY (abbreviated text) files. Users should carefully check retrieved material to ensure that documents were properly downloaded.

On the World Wide Web, connect to the **Federal Register** at http://www.access.gpo.gov/nara. Those without World Wide Web access can also connect with a local WAIS client, by Telnet to swais.access.gpo.gov, or by dialing (202) 512-1661 with a computer and modem. When using Telnet or modem, type swais, then log in as guest with no password.

For more information about GPO Access, contact the GPO Access User Support Team by E-mail at gpoaccess@gpo.gov; by fax at (202) 512–1262; or call (202) 512–1530 or 1–888–293–6498 (toll free) between 7 a.m. and 5 p.m. Eastern time, Monday–Friday, except Federal holidays.

The annual subscription price for the **Federal Register** paper edition is $638, or $697 for a combined **Federal Register,** Federal Register Index and List of CFR Sections Affected (LSA) subscription; the microfiche edition of the **Federal Register** including the Federal Register Index and LSA is $253. Six month subscriptions are available for one-half the annual rate. The charge for individual copies in paper form is $9.00 for each issue, or $9.00 for each group of pages as actually bound; or $2.00 for each issue in microfiche form. All prices include regular domestic postage and handling. International customers please add 25% for foreign handling. Remit check or money order, made payable to the Superintendent of Documents, or charge to your GPO Deposit Account, VISA, MasterCard or Discover. Mail to: New Orders, Superintendent of Documents, P.O. Box 371954, Pittsburgh, PA 15250–7954.

There are no restrictions on the republication of material appearing in the **Federal Register.**

How To Cite This Publication: Use the volume number and the page number. Example: 65 FR 12345.

SUBSCRIPTIONS AND COPIES

PUBLIC	
Subscriptions:	
Paper or fiche	**202–512–1800**
Assistance with public subscriptions	**512–1806**
General online information	**202–512–1530; 1–888–293–6498**
Single copies/back copies:	
Paper or fiche	**512–1800**
Assistance with public single copies	**512–1803**
FEDERAL AGENCIES	
Subscriptions:	
Paper or fiche	**523–5243**
Assistance with Federal agency subscriptions	**523–5243**

Printed on recycled paper.

Contents

Federal Register

Vol. 65, No. 103

Friday, May 26, 2000

Agricultural Marketing Service
RULES
Meats, prepared meats, and meat products; grading, certification, and standards:
Federal meat grading and certification services; fee changes, 34040–34042
Tobacco inspection:
Mandatory inspection fees and charges, 34039–34040
PROPOSED RULES
Commodity laboratory testing programs:
Science and technology laboratory testing service fees, 34301–34320
NOTICES
Committees; establishment, renewal, termination, etc.:
Flue-Cured Tobacco Advisory Committee, 34139

Agriculture Department
See Agricultural Marketing Service
See Animal and Plant Health Inspection Service
See Forest Service
See Rural Housing Service
See Rural Utilities Service
NOTICES
Agency information collection activities:
Submission for OMB review; comment request, 34138–34139

Air Force Department
NOTICES
Environmental statements; notice of intent:
Altus Air Force Base, OK, 34153–34154

Animal and Plant Health Inspection Service
PROPOSED RULES
Irradiation phytosanitary treatment of imported fruits and vegetables, 34113–34125

Blind or Severely Disabled, Committee for Purchase From People Who Are
See Committee for Purchase From People Who Are Blind or Severely Disabled

Centers for Disease Control and Prevention
NOTICES
Agency information collection activities:
Submission for OMB review; comment request, 34188–34189
Grants and cooperative agreements; availability, etc.:
State Cardiovascular Health Programs, 34189–34195
Meetings:
Public Health Service Activities and Research at DOE Sites Citizens Advisory Committee, 34195–34196

Civil Rights Commission
NOTICES
Meetings; State advisory committees:
Utah, 34145

Coast Guard
PROPOSED RULES
Ports and waterways safety:
Atlantic Ocean, Virginia Beach, VA; safety zone, 34127–34129

Commerce Department
See Export Administration Bureau
See International Trade Administration
See National Institute of Standards and Technology
See National Oceanic and Atmospheric Administration
NOTICES
Agency information collection activities:
Submission for OMB review; comment request, 34145–34146

Committee for Purchase From People Who Are Blind or Severely Disabled
NOTICES
Procurement list; additions and deletions, 34144–34145

Defense Department
See Air Force Department
NOTICES
Agency information collection activities:
Submission for OMB review; comment request, 34152–34153

Education Department
NOTICES
Grants and cooperative agreements; availability, etc.:
Educational research and improvement—
Ready-To-Learn Television Program, 34154–34155

Employment Standards Administration
NOTICES
Minimum wages for Federal and federally-assisted construction; general wage determination decisions, 34233–34234

Energy Department
See Federal Energy Regulatory Commission
NOTICES
Environmental statements; notice of intent:
Los Alamos National Laboratory Technical Area 18 Missions, NM; relocation
Scoping meeting rescheduled, 34155
Meetings:
Environmental Management Site-Specific Advisory Board—
Paducah Gaseous Diffusion Plant, KY, 34155–34156
National Petroleum Council, 34156

Environmental Protection Agency
RULES
Air programs; approval and promulgation; State plans for designated facilities and pollutants:
Pennsylvania; correction, 34104–34105
Air quality implementation plans; approval and promulgation; various States:
California, 34101–34104
PROPOSED RULES
Air pollutants, hazardous; national emission standards:
Vegetable oil production; solvent extraction, 34251–34275
Wet-formed fiberglass mat production, 34277–34299
Air programs:
Outer Continental Shelf regulations—
California; consistency update, 34129–34132

NOTICES
Agency information collection activities:
Reporting and recordkeeping requirements, 34171–34172
Submission for OMB review; comment request, 34172–34173
Air programs:
State implementation plans; adequacy status for transportation conformity purposes—
Ohio, 34174
Environmental statements; availability, etc.:
Agency statements—
Comment availability, 34175
Weekly receipts, 34174–34175
Meetings:
Gulf of Mexico Program Focus Teams, 34175
State FIFRA Issues Research and Evaluation Group, 34176
Pesticide, food, and feed additive petitions:
Vinclozolin, 34179–34180
Pesticide programs:
Restricted use pesticides; applicators certification; State plans—
Delaware, 34178–34179
Pesticide registration, cancellation, etc.:
Sankyo Co., Ltd., 34176–34177
Superfund; response and remedial actions, proposed settlements, etc.:
Hoxie Crash Site, KS, 34180
Superfund program:
Prospective purchaser agreements—
Copley Square Plaza Site, OH, 34180

Executive Office of the President
See Presidential Documents

Export Administration Bureau
RULES
Export licensing:
Commerce Control List; revisions and clarifications, 34073–34079
NOTICES
Meetings:
Regulations and Procedures Technical Advisory Committee, 34146

Federal Aviation Administration
RULES
Air traffic operating and flight rules, etc.:
National parks air tour management, 34367–34368
Airworthiness directives:
Airbus, 34055–34061, 34069–34072
Boeing, 34048–34054, 34061–34065
Israel Aircraft Industries, Ltd, 34054–34055
McDonnell Douglas, 34321–34360
REVO, Inc., 34065–34069

Federal Bureau of Investigation
NOTICES
Agency information collection activities:
Proposed collection; comment request, 34232–34233

Federal Emergency Management Agency
NOTICES
Disaster and emergency areas:
Maine, 34181
New Mexico, 34181
Meetings:
Technical Mapping Advisory Council, 34181–34182

Federal Energy Regulatory Commission
NOTICES
Electric rate and corporate regulation filings:
Ameren Energy Generating Co. et al., 34159–34161
Commonwealth Edison Co. et al., 34161–34163
Entergy Services, Inc., et al., 34163–34167
Lone Star Steel Sales Co. et al., 34167–34168
PSEG Power New York Inc. et al., 34168–34171
Applications, hearings, determinations, etc.:
Consolidated Edison Co. of New York, Inc., et al., 34156
Egan Hub Partners, L.P., 34156–34157
Great Lakes Gas Transmission L.P. et al., 34157
Mid-Tex G&T Electric Cooperative, Inc., et al., 34157–34158
Nevada Sun-Peak L.P. et al., 34158
Pedricktown Cogeneration L.P., 34158
SOWEGA Power LLC, 34158
Tennessee Gas Pipeline Co., 34159
Trailblazer Pipeline Co., 34159

Federal Housing Finance Board
PROPOSED RULES
Federal home loan bank system:
Acquired member assets, core mission activities, investments and advances, 34127

Federal Motor Carrier Safety Administration
PROPOSED RULES
Motor carrier safety standards:
Drivers' hours of service—
Fatigue prevention; driver rest and sleep for safe operations; hearings, 34132–34133
NOTICES
Motor carrier safety standards:
Controlled substances and alcohol testing management information system statistical data, 34246–34247

Federal Reserve System
RULES
Extensions of credit by Federal Reserve banks (Regulation A):
Discount rate change, 34047–34048
NOTICES
Banks and bank holding companies:
Change in bank control, 34182
Formations, acquisitions, and mergers, 34182
Permissible nonbanking activities, 34182–34183
Federal Reserve bank services:
Automated clearing house deposit deadlines and pricing practices relative to private-sector operators, 34183–34187
Meetings; Sunshine Act, 34187

Food and Drug Administration
RULES
Food additives:
Paper and paperboard components—
Sodium xylenesulfonate, 34081–34082
Human drugs:
Aqueous-based drug products for oral inhalation; sterility requirement, 34082–34089
NOTICES
Agency information collection activities:
Proposed collection; comment request, 34196–34200
Memorandums of understanding:
Centers for Disease Control and Prevention et al.; animal production and food health interagency coordinating committee; establishment, 34200–34211

Forest Service
NOTICES
Environmental statements; notice of intent:
Ottawa National Forest, MI, 34139–34141

General Accounting Office
NOTICES
Meetings:
Federal Accounting Standards Advisory Board, 34187

General Services Administration
NOTICES
Privacy Act:
Systems of records, 34187–34188

Health and Human Services Department
See Centers for Disease Control and Prevention
See Food and Drug Administration
See Indian Health Service
See National Institutes of Health

Housing and Urban Development Department
NOTICES
Agency information collection activities:
Proposed collection; comment request, 34226
Grants and cooperative agreements; availability, etc.:
Facilities to assist homeless—
Excess and surplus Federal property, 34226–34230

Indian Health Service
NOTICES
Grant and cooperative agreement awards:
Indian Health Scholarship Program; recipients list, 34212–34220
Grants and cooperative agreements; availability, etc.:
American Indian/Alaska Native Children, Youth, and Families; Mental Health and Community Safety Initiative, 34220
Organization, functions, and authority delegations:
Albuquerque Area Indian Health Service, 34220–34222

Interior Department
See Land Management Bureau
See Surface Mining Reclamation and Enforcement Office
NOTICES
Hydropower licensing; review process for mandatory conditions, 34151–34152

International Trade Administration
NOTICES
Antidumping:
Glycine from—
China, 34147
Preserved mushrooms from—
Chile, 34147–34148
Tapered roller bearings, four inches or less in outside diameter, and components, etc., from—
Japan, 34148
Applications, hearings, determinations, etc.:
Tulane University, 34148

International Trade Commission
NOTICES
Import investigations:
Ammonium nitrate from—
Russia, 34231–34232
Magnetic resonance injection systems and components, 34231
Sulfanilic acid from—
China and India, 34232

Justice Department
See Federal Bureau of Investigation
See Prisons Bureau

Labor Department
See Employment Standards Administration
See Labor Statistics Bureau

Labor Statistics Bureau
NOTICES
Committees; establishment, renewal, termination, etc.:
Federal Economic Statistics Advisory Committee, 34234
Meetings:
Federal Economic Statistics Advisory Committee, 34234–34235

Land Management Bureau
NOTICES
Resource management plans, etc.:
Lahontan Resource Area, Naval Air Station Fallon, NV, 34230–34231
Withdrawal and reservation of lands:
Alaska, 34230

Maritime Administration
NOTICES
Agency information collection activities:
Proposed collection; comment request, 34247–34248
Submission for OMB review; comment request, 34248

National Highway Traffic Safety Administration
RULES
Motor vehicle theft prevention standard:
High-theft vehicle lines for 2001 model year; listing, 34106–34112
NOTICES
Motor vehicle safety standards; exemption petitions, etc.:
General Motors Corp., 34248–34249

National Institute of Standards and Technology
NOTICES
Grants and cooperative agreements; availability, etc.:
Materials Science and Engineering Laboratory Program; Neutron Scattering Research and Spectroscopy, 34149–34151

National Institutes of Health
NOTICES
Meetings:
National Center for Research Resources, 34222
National Eye Institute, 34222–34223
National Heart, Lung, and Blood Institute, 34223
National Institute of Arthritis and Musculoskeletal and Skin Diseases, 34224–34225
National Institute of Child Health and Human Development, 34224
National Institute of Mental Health, 34223–34224
National Institute on Aging, 34222
Scientific Review Center, 34226

National Oceanic and Atmospheric Administration
PROPOSED RULES
Fishery conservation and management:
Alaska; fisheries of Exclusive Economic Zone—
Pacific cod, 34133–34137

NOTICES
Hydropower licensing; review process for mandatory conditions, 34151–34152

Nuclear Regulatory Commission
NOTICES
Applications, hearings, determinations, etc.:
Arizona Public Service Co. et al., 34369–34371

Postal Service
RULES
International Mail Manual:
Priority Mail Global Guaranteed; enhanced expedited service from selected U.S.locations to selected European countries, 34096–34101

Presidential Documents
PROCLAMATIONS
Special observances:
Maritime Day, National (Proc. 7312), 34375–34376
ADMINISTRATIVE ORDERS
Yugoslavia, Federal Republic of Bosnian Serbs, and Kosovo; continuation of emergency (Notice of May 25, 2000), 34379–34380

Prisons Bureau
RULES
Inmate control, custody, care, etc.:
Civil contempt of court commitments, 34361–34363
Federal Tort Claims Act, 34362–34365

Public Health Service
See Centers for Disease Control and Prevention
See Food and Drug Administration
See Indian Health Service
See National Institutes of Health

Railroad Retirement Board
NOTICES
Agency information collection activities:
Proposed collection; comment request, 34235–34236

Rural Housing Service
NOTICES
Agency information collection activities:
Proposed collection; comment request, 34141–34142

Rural Utilities Service
RULES
Electric loans:
Standards and specifications for materials and construction—
Underground electric distribution; specifications and drawings, 34042–34047
PROPOSED RULES
Seismic safety, 34125–34127
NOTICES
Environmental statements; availability, etc.:
Jackson County Lake Project, KY, 34142–34144

Securities and Exchange Commission
RULES
Electronic Data Gathering, Analysis, and Retrieval (EDGAR):
Filer Manual—
Update adoption and incorporation by reference, 34079–34081
NOTICES
Self-regulatory organizations; proposed rule changes:
American Stock Exchange LLC, 34236–34238
Chicago Board Options Exchange, Inc., 34238–34240
National Association of Securities Dealers, Inc., 34240–34244
Philadelphia Stock Exchange, Inc., 34244–34245
Applications, hearings, determinations, etc.:
Public utility holding company filings, 34236

Small Business Administration
NOTICES
Agency information collection activities:
Submission for OMB review; comment request, 34245
Disaster loan areas:
Missouri, 34245
New Mexico, 34245–34246

State Department
RULES
International Traffic in Arms regulations
Commercial communications satellite components, systems, parts, accessories, etc.; exports, 34089–34092

Surface Mining Reclamation and Enforcement Office
RULES
Permanent program and abandoned mine land reclamation plan submissions:
Indiana, 34092–34094
Oklahoma, 34094–34096

Surface Transportation Board
NOTICES
Railroad services abandonment:
CSX Transportation, Inc., 34249–34250

Transportation Department
See Coast Guard
See Federal Aviation Administration
See Federal Motor Carrier Safety Administration
See Maritime Administration
See National Highway Traffic Safety Administration
See Surface Transportation Board
RULES
Organization, functions, and authority delegations:
Maritime Administrator, 34105–34106

Separate Parts In This Issue

Part II
Environmental Protection Agency, 34251–34275

Part III
Environmental Protection Agency, 34277–34299

Part IV
Department of Agriculture, Agricultural Marketing Service, 34301–34320

Part V
Department of Transportation, Federal Aviation Administration, 34321–34360

Part VI
Department of Justice, Prisons Bureau, 34361–34363

Part VII
Department of Transportation, Federal Aviation Administration, 34367–34368

Part VIII
Nuclear Regulatory Commission, 34369–34371

Part IX
The President, 34373–34376

Part X
The President, 34377–34380

Reader Aids
Consult the Reader Aids section at the end of this issue for phone numbers, online resources, finding aids, reminders, and notice of recently enacted public laws.

CFR PARTS AFFECTED IN THIS ISSUE

A cumulative list of the parts affected this month can be found in the Reader Aids section at the end of this issue.

3 CFR

Proclamations:

7312 34375

Executive Orders:

12808 (See Notice of May 25, 2000) 34379
12810 (See Notice of May 25, 2000) 34379
12831 (See Notice of May 25, 2000) 34379
12846 (See Notice of May 25, 2000) 34379
12934 (See Notice of May 25, 2000) 34379
13088 (See Notice of May 25, 2000) 34379
13121 (See Notice of May 25, 2000) 34379

Administrative Orders:

Notices:

May 25, 20000 34379

Presidential Determinations:

No. 96-7 (See Notice of May 25, 2000) 34379

7 CFR

29 34039
54 34040
1728 34042

Proposed Rules:

90 34302
91 34302
92 34302
93 34302
94 34302
98 34302
305 34113
319 34113
1792 34125

12 CFR

201 34047

Proposed Rules:

900 34127
940 34127
950 34127
955 34127
956 34127

14 CFR

39 (10 documents) 34048, 34054, 34055, 34059, 34061, 34063, 34065, 34069, 34322, 34341
91 34368

15 CFR

742 34073
743 34073
746 34073
772 34073
774 34073

17 CFR

232 34079

21 CFR

176 34081
200 34082

22 CFR

123 34089

28 CFR

522 34362
543 34362

30 CFR

914 34092
936 34094

33 CFR

Proposed Rules:

165 34127

39 CFR

20 34096

40 CFR

52 34101
62 34104

Proposed Rules:

55 34129
63 (2 documents) 34252, 34278

49 CFR

1 34105
541 34106

Proposed Rules:

350 34132
390 34132
394 34102
395 34102
398 34102

50 CFR

Proposed Rules:

679 34133

Rules and Regulations

Federal Register
Vol. 65, No. 103
Friday, May 26, 2000

This section of the FEDERAL REGISTER contains regulatory documents having general applicability and legal effect, most of which are keyed to and codified in the Code of Federal Regulations, which is published under 50 titles pursuant to 44 U.S.C. 1510.

The Code of Federal Regulations is sold by the Superintendent of Documents. Prices of new books are listed in the first FEDERAL REGISTER issue of each week.

DEPARTMENT OF AGRICULTURE

Agricultural Marketing Service

7 CFR Part 29

[Docket No. TB–00–10]

RIN 0581–AB87

Tobacco Fees and Charges for Mandatory Inspection; Fee Increase

AGENCY: Agricultural Marketing Service, USDA.

ACTION: Interim final rule with request for comments.

SUMMARY: The Tobacco Inspection Act requires the Secretary to fix and collect fees and charges for inspection and certification, and other services, including administrative and supervisory costs, at designated tobacco auction markets in all tobacco producing areas. The fees collected must, as nearly as possible, cover the Department's costs of performing these services and also maintain a reserve sufficient to cover program financial liabilities. This interim final rule will increase the fee from $.0083 to $.0100 per pound to cover the increased cost of operating the tobacco inspection program and maintain the operating reserve. The last increase in the fee was in 1995. This increase does not affect the fees for import, export, or permissive tobacco inspection.

DATES: Effective May 30, 2000; comments received by June 26, 2000, will be considered prior to issuance of a final rule.

ADDRESSES: Send comments to John P. Duncan III, Deputy Administrator, Tobacco Programs, Agricultural Marketing Service (AMS), United States Department of Agriculture (USDA), AG 0280, Room 502 Annex Building, PO Box 96456, Washington, DC 20090–6456. Comments will be made available for public inspection at this location during regular business hours.

FOR FURTHER INFORMATION CONTACT: John P. Duncan III, Deputy Administrator, Tobacco Programs, AMS, USDA, AG 0280, Room 502 Annex Building, PO Box 96456, Washington, DC 20090–6456; telephone: (202) 205–0567; Fax: (202) 205–0235.

SUPPLEMENTARY INFORMATION:

A. Executive Order 12866

This rule has been determined to be not significant for purposes of Executive Order 12866, and therefore, has not been reviewed by the Office of Management and Budget.

B. Regulatory Flexibility Act

Pursuant to the requirements set forth in the Regulatory Flexibility Act (5 U.S.C. 601 *et seq.*), full consideration has been given to the potential economic impact upon small business. All tobacco warehouses and producers fall within the confines of ''small business'' which are defined by the Small Business Administration (13 CFR 121.201) as those having annual receipts of less than $500,000 and small agricultural service firms are defined as those whose annual receipts are less than $3,500,000. There are approximately 360 tobacco warehouses and approximately 170,000 producers and most warehouses and producers may be classified as small entities. The AMS has determined that this action would not have a significant economic impact on a substantial number of small entities.

The Tobacco Inspection Act of 1935, as amended, (7 U.S.C. 511–511q), requires the Secretary to fix and collect fees and charges for inspection and certification of quota tobacco, and other services, including administrative and supervisory costs, at designated tobacco auction markets in all tobacco producing areas. The fees collected must, as nearly as possible, cover the Department's costs of performing these services.

The AMS annually reviews its user fee programs to determine if the fees are adequate. The most recent review determined that the existing fee schedule would result in significant losses in crop years 2000 and 2001 and leave the program with inadequate reserve balances. Due to reductions in tobacco quotas and increases in the sale of tobacco through contract sales, obligations for the 2000 crop-year are estimated at $11,607,000 and revenues are expected to reach only $6,843,000, for a loss of $4,764,000 and a reduction in the operating reserve to $4,738,000. If the same level of service and fee structure continues for the 2001 crop-year the estimated loss would exceed $6,154,000 and the operating reserve would drop to a *negative* $1,416,000.

The major items affecting obligations are Federally mandated increases in salaries and benefits, travel costs, and other administrative costs. Revenue depends on the amount of tobacco sold on the designated auction markets. Production quotas for tobacco were reduced by 228.6 million pounds in 1998, 330.7 million pounds in 1999, and 318.7 million pounds in 2000. This is a total decrease of 878 million pounds in production quotas since 1997. The amount of tobacco graded in 1998 was 1.56 billion pounds, 1.31 billion pounds in 1999, and 938 million pounds is estimated in 2000. Contract sales of tobacco will further reduce the amount graded by about 235 million pounds in 2000. Based on these figures, the current fee level will not generate the amount of revenue sufficient to maintain the level of inspection services requested and maintain funds in the program's reserve account. An analysis of available data indicates that a fee of $.0100 per pound effective for the 2000 crop-year would increase revenue by $1,277,000 and bring the operating reserve up to $6,014,000. The requested fee increase was recommended by the National Advisory Committee for Tobacco Inspection Services at its meeting on April 20, 2000. This committee is made up of representatives of producer interest groups, appointed by the Secretary of Agriculture, to advise on the level of services and user fee rate. This fee increase represents the minimum level needed to cover costs for the 2000 crop-year. In the future, AMS will continue to review the program to ensure that fees are adequate. Accordingly, we believe that the impact of the fee increase would not be significant on users of the inspection and certification services.

C. Civil Justice Reform

This rule has been reviewed under Executive Order 12988, Civil Justice Reform. This action is not intended to

have retroactive effect. This rule will not preempt any State or local laws, regulations, policies, unless they present an irreconcilable conflict with this rule. There are no administrative procedures that must be exhausted prior to any judicial challenge to the provisions of this rule.

Background

The Secretary of Agriculture is authorized by the Tobacco Inspection Act of 1935, as amended, 7 U.S.C. 511–511q *et seq.*, to fix and collect fees and charges for inspection and certification of quota tobacco, and other services, including administrative and supervisory costs, at designated tobacco auction markets in all tobacco producing areas. The fees collected must, as nearly as possible, cover the Department's costs of performing these services.

The AMS regularly reviews programs to determine if fees are adequate and if costs are reasonable. This interim final rule will increase the fees and charges assessed by the AMS for the mandatory inspection and certification of producer tobacco sold at designated auction markets throughout the tobacco producing areas.

The AMS conducted a recent review of the financial status of this program to determine whether the fee is sufficient. Revenue for the 1999 crop-year was approximately $11,419,000. Obligations for the period are approximately $11,508,000. At the current fee level, insufficient revenue would be generated to meet the costs of the inspection program and to replace funds that had to be used from the program's reserve account. The major factors affecting obligations are mandatory increases in Federal salaries and benefits, travel allowances, and other administrative costs since 1995. An analysis of data available to the AMS indicates that a fee of $.0100 per pound would cover expenses and maintain a reserve that would meet any reasonable contingency.

Due to an estimated 43 percent reduction in tobacco to be inspected and 20–30 percent of tobacco being sold through contract sales, obligations for the 2000 crop-year are estimated at $11,607,000 and revenues are expected to reach only $6,843,000, for a loss of $4,764,000 and a reduction in the operating reserve to $4,738,000. If the same level of service and fee structure continues for the 2001 crop-year the estimated loss would exceed $6,154,000 and the operating reserve would drop to a *negative* $1,416,000.

Revenue depends on the amount of tobacco sold on the designated auction markets. Production quotas for tobacco were reduced by 228.6 million pounds in 1998, 330.7 million pounds in 1999, and 318.7 million pounds in 2000. This is a total decrease of 878 million pounds of tobacco since 1997. Also, contract sales of tobacco will further reduce the amount graded by about 235 million pounds in 2000. Based on these figures, the current fee level will not generate the amount of revenue sufficient to maintain the level of inspection services requested and maintain funds in the program's reserve account. An analysis of available data indicates that a fee of $.0100 per pound effective for the 2000 crop-year would increase revenue by $1,277,000 and bring the operating reserve up to $6,014,000.

Information on program income and expenses was presented to the National Advisory Committee for Tobacco Inspection Services at its meeting on February 17, 2000, in Raleigh, North Carolina, and again on April 20, 2000, in Washington, D.C. The National Advisory Committee, which is made up of 14 representatives from tobacco producer interest groups and appointed by the Secretary of Agriculture, was established by law in 1981 to advise the Secretary on the level of services needed and the fees necessary to cover those services. By a majority vote, the Committee adopted a motion to recommend to the Secretary an increase in the fee to $.0100 per pound.

It is hereby found and determined upon good cause that it is impracticable, unnecessary, and contrary to the public interest to give preliminary notice prior to putting this rule into effect and that good cause exists for not postponing the effective date of this rule until 30 days after publication in the **Federal Register** because: (1) The 2000 flue-cured marketing season will begin about July 17 and this action is needed, as soon as possible, so as to treat all types of tobacco on an equal basis for the 2000 crop-year; (2) the National Advisory Committee recommended the fee increase by a majority vote; and (3) this interim final rule provides a 30-day comment period, and all comments timely received will be considered prior to finalization of this rule.

List of Subjects in 7 CFR Part 29

Administrative practice and procedure, Advisory committees, Government publications, Imports, Pesticides and pests, Reporting and recordkeeping requirements, Tobacco.

For reasons set forth in the preamble, 7 CFR part 29 is amended as follows:

PART 29—TOBACCO INSPECTION

1. The authority citation for part 29, subpart B continues to read as follows:

Authority: 7 U.S.C. 511m and 511r.

§ 29.123 [Amended]

2. In § 29.123, paragraph (a) is amended by removing the words ''$.0083 per pound'' and adding the words ''$.0100 per pound'' in their place.

Dated: May 22, 2000.

Kathleen A. Merrigan,

Administrator, Agricultural Marketing Service.

[FR Doc. 00–13290 Filed 5–25–00; 8:45 am]

BILLING CODE 3410–02–P

DEPARTMENT OF AGRICULTURE

Agricultural Marketing Service

7 CFR Part 54

[Docket No. LS–98–12]

RIN 0581–AB83

Changes in Fees for Federal Meat Grading and Certification Services

AGENCY: Agricultural Marketing Service, USDA.

ACTION: Final rule.

SUMMARY: The Agricultural Marketing Service (AMS) is revising the hourly fee rates for voluntary Federal meat grading and certification services. The hourly fees will be adjusted by this final rule to reflect the increased cost of providing service, and ensure that the Federal meat grading and certification program is operated on a financially self-supporting basis as required by law.

EFFECTIVE DATE: June 26, 2000.

FOR FURTHER INFORMATION CONTACT: Larry R. Meadows, Chief, Meat Grading and Certification (MGC) Branch (202) 720–1246.

SUPPLEMENTARY INFORMATION:

A. Executive Order 12866

This action has been determined to be not significant for purposes of Executive Order 12866, and has not been reviewed by the Office of Management and Budget (OMB).

B. Regulatory Flexibility

Pursuant to the requirements set forth in the Regulatory Flexibility Act (RFA) (5 U.S.C. 601 *et seq.*), the Administrator of AMS has considered the economic impact of this proposed action on small entities.

AMS, through its MGC Branch, provides voluntary Federal meat grading

and certification services to a total of 370 business of which 264 are small entities. Small entities, which account for approximately 38 percent of the MGC Branch's total revenues, are defined as those that employ less than 500 employees. The breakdown of small entities that AMS provides meat grading and certification services to are as follows: 93 meat processors, 90 livestock slaughterers, 52 facilities that further process federally donated products, 13 trade associations, 9 livestock feeders, 3 trucking companies, and 4 brokers. These small entities are under no obligation to use meat grading and certification services provided under the authority of the Agricultural Marketing Act of 1946 (AMA), as amended, 7 USC 1621 *et seq.*

Voluntary meat grading and certification services facilitate the orderly marketing of meat and meat products and enable consumers to obtain the quality of meat they desire. Grading services consist of the evaluation of carcass beef, lamb, pork, veal, and calf for conformance with the grades of an official U.S. Standard for each species. Approximately 21 billion pounds of meat is graded each year. Certification services consist of the evaluation of meat and meat products for compliance with specification and contractual requirements. Certification services are used most often by large-scale meat purchasers to ensure that the quality and yields of the products they purchase comply with their stated requirements. Approximately 17 billion pounds of meat and meat products are certified each year.

AMS regularly reviews its user-fee-financed programs to determine if the fees are adequate. The most recent review determined that the existing fee schedule would not generate sufficient revenues to recover program costs for current and near-term periods while maintaining an adequate reserve balance. Without a fee increase, the projected operating losses for fiscal year (FY) 2000, FY 2001, and FY 2002 will be $1.9 million, $2.9 million, and $4.1 million respectively. Operating losses at these levels will deplete MGC Branch's operating reserve and place the Branch in an unstable financial position that will adversely affect its ability to provide the current level of grading and certification services. Any reduction in Branch services has the potential to substantially harm small and limited resource firms that rely on grading and certification services to market their products and compete in a global marketplace.

This action will raise the fees charged to all users of grading and certification services. AMS estimates that overall, this will yield an additional $175 thousand in revenue for the balance of FY 2000. Of this $175 thousand, small businesses would pay approximately $66,500 or an average of $255 per month. In FY 2001 and 2002, small entities will pay approximately $798,000, an average of $255 per month or $3,058 per year. However, due to increased program and industry efficiencies, the FY 2000–2002 unit costs of program services (revenue/total pounds graded and certified) will remain virtually unchanged at approximately $0.0006 per pound for each fiscal year. Accordingly, the Administrator of AMS has determined that this proposal would not have a significant economic effect on a substantial number of small business entities.

This fee increase, only the second since November 1993, is necessary to offset increased program operating costs resulting from: (1) The congressionally-mandated, governmentwide salary increases for 1998, 1999, and 2000; (2) inflation of nonsalary operating costs; (3) accumulated increases in CONUS per diem rates; (4) increased costs of servicing less than full-time applicants; and (5) costs associated with updating the MGC Branch's automated information management system to ensure compliance with year 2000 operating requirements.

Since 1993, in an ongoing effort to control operating costs, the MGC Branch has closed 3 field offices, reduced mid-level supervisory staff by over 50 percent, and reduced the number of support staff by 38 percent. At the same time, the MGC Branch has become more reliant on automated information management systems for data collection, retrieval, and dissemination, account billing, and disbursement of employee entitlements. The reduction in field offices, supervisory staff, support personnel, and the increased reliance on automated systems has enabled the MGC Branch to absorb a substantial portion of the increased operating costs and minimize increases in user-fees over the past 7 years.

Despite the MGC Branch's vigilant cost reduction efforts since 1993, the operating expenses projected for FY 2000 and beyond can only be balanced by adjusting the hourly fee rate charged to users of meat grading and certification services. Any further reduction in personnel, services, or management infrastructure beyond those already implemented would have a detrimental effect on the program's ability to provide meat grading and certification services and ensure the accurate and uniform application of such services. The hourly rate increase is necessary to recover the costs of providing voluntary Federal meat grading and certification services and for the program to continue serving all segments of the industry.

C. Civil Justice Reform

This action has been reviewed under Executive Order 12988, Civil Justice Reform. This action is not intended to have retroactive effect. This rule will not pre-empt any State or local laws, regulations, or policies, unless they present an irreconcilable conflict with this rule. There are no administrative procedures which must be exhausted prior to any judicial challenge to the provisions of this rule.

D. Paperwork Reduction Act

This action will not impose any additional reporting or recordkeeping requirements on either small or large meat slaughters, processors, and other applicants who use Federal meat grading and certification services.

Comments

On January 20, 2000, (65 FR 3155) in the **Federal Register**, the Agency published the proposed rule to increase the fees for Federal Meat Grading and Certification services and requested comments by March 20, 2000. The Agency received two comments. The first respondent requested that AMS work more closely with industry to identify alternatives to current grading and certification operations and procedures to stem future rate increases. The respondent went on to identify the following as possible areas the Industry and AMS could work cooperatively to achieve cost savings or stem future user-fee increases: (1) Incorporating technological advances; (2) identifying appropriate quality control or process verification activities that could be shifted to the Industry; and, (3) identifying plant operation alternatives.

AMS is continually seeking ways to reduce costs to the industry and increase operational efficiency. This fee increase, combined with the previous increase in 1998, equates to an average annual increase of 3.3 percent since 1993. However, during this same time the amount of product graded and certified has dramatically increased by over 9 billion pounds per year in comparison to the total graded and certified in FY 1993. This amounts to a 48 percent per hour increase in efficiency. The increased efficiencies offset the increase in fee rates to leave the overall cost per pound to the industry unchanged at $0.0006 per

pound. As requested by the respondent, the Agency is currently and will continue seeking ways to increase efficiency and reduce the total cost of grading and certification services to the industry. In fact, AMS is actively involved in each of the areas identified by the respondent for potential cost savings. For example, AMS is cooperating with an industry research project to test video-imaging technology for grading and certification applications. Additionally, AMS is expanding the role of statistical process control as a basis of program verification activities in many carcass and meat marketing programs.

The second respondent questioned the need for revising the fee rates and emphasized the effect of the user fees on small entities. Small entities generate 38 percent of the Agency's meat grading and certification hourly revenues. The Agency is keenly aware of how fee increases impact small entities. In the more than 70 years meat grading and certification services have been available, the Agency has always ensured that every alternative to a fee increase has been considered. This fee increase, only the second since November 1993, is necessary to offset increased program operating costs resulting from: (1) The congressionally-mandated, governmentwide salary increases for 1998, 1999, and 2000; (2) inflation of nonsalary operating costs; (3) accumulated increases in CONUS per diem rates; (4) increased costs of servicing less than full-time applicants; and, (5) costs associated with updating the MGC Branch's automated information management system to ensure compliance with year 2000 operating requirements. Despite the MGC Branch's cost reduction efforts and increased efficiency, the operating expenses projected for FY2000 and beyond can only be balanced by adjusting the hourly fee rate charged to users of voluntary meat grading and certification services. Any further reduction in personnel, services, or management infrastructure beyond those already in place would have a detrimental effect on the program's ability to provide meat grading and certification services and ensure the accurate application of such services. Further, any reduction in Branch services has the potential to substantially (and disproportionally) harm small and limited resource firms that rely on grading and certification services to market their products and compete in a global marketplace.

Background

The Secretary of Agriculture is authorized by the AMA, 1946 as amended, 7 U.S.C. 1621 *et seq.*, to provide voluntary Federal meat grading and certification services to facilitate the orderly marketing of meat and meat products and to enable consumers to obtain the quality of meat they desire. The AMA also provides for the collection of fees from users of the Federal meat grading and certification services that are approximately equal to the cost of providing these services. The hourly fees for service are established by equitably distributing the projected annual program operating costs over the estimated hours of service—revenue hours—provided to users of the service. Program operating costs include salaries and fringe benefits of meat graders, supervision, travel, training, and all administrative costs of operating the program. Employee salaries and benefits account for approximately 80 percent of the total budget. Revenue hours include base hours, premium hours, and service performed on Federal legal holidays. As program operating costs continue to rise, the hourly fees must be adjusted to enable the program to remain financially self-supporting as required by law.

In view of these considerations, the Agency will increase the base hourly rate commitment applicants pay for voluntary Federal meat grading and certification services from $39.80 to $45. A commitment applicant is a user of meat grading and certification services who agrees to pay for five continuous 8 hour days, Monday through Friday between the hours of 6 a.m. and 6 p.m., excluding legal holidays. The base hourly rate for noncommitment applicants will increase from $42.20 to $52. A noncommitment applicant is a user of meat grading and certification services for eight consecutive hours or less per day between the hours of 6 a.m. and 6 p.m., excluding legal holidays. The hourly rate for premium hours will increase from $47.80 to $57, and will be charged to users of the service for hours worked in excess of 8 hours per day for each assigned official grader and for work performed before 6 a.m. and after 6 p.m., Monday through Friday, and any time on Saturday or Sunday, except on Federal legal holidays. The holiday rate for all applicants will increase from $79.60 to $90, and will be charged to users of the service for all hours worked on legal holidays.

List of Subjects in 7 CFR Part 54

Food grades and standards, Food labeling, Meat and meat products.

For the reasons set forth in the preamble, 7 CFR part 54 is amended as follows:

PART 54—MEATS, PREPARED MEATS, AND MEAT PRODUCTS (GRADING, CERTIFICATION, AND STANDARDS)

1. The authority citation for part 54 continues to read as follows:

Authority: 7 U.S.C. 1621–1627.

§ 54.27 [Amended]

2. In § 54.27, paragraph (a), ''$42.20'' is removed and ''$52'' is added in its place, ''$47.80'' is removed and ''$57'' is added in its place, ''$79.60'' is removed and ''$90'' is added in its place, and paragraph (b), ''$39.80'' is removed and ''$45'' is added in its place, ''$47.80'' is removed and ''$57'' is added in its place, ''$79.60'' is removed and ''$90'' is added in its place.

Dated: May 22, 2000.

Barry L. Carpenter,

Deputy Administrator, Livestock and Seed Program.

[FR Doc. 00–13240 Filed 5–25–00; 8:45 am]

BILLING CODE 3410–02–P

DEPARTMENT OF AGRICULTURE

Rural Utilities Service

7 CFR Part 1728

Specifications and Drawings for Underground Electric Distribution

AGENCY: Rural Utilities Service, USDA.

ACTION: Final rule.

SUMMARY: The Rural Utilities Service (RUS) is revising its regulations on Specifications and Drawings for Underground Electric Distribution, RUS Bulletin 50–6. This bulletin is currently incorporated by reference in RUS regulations and, will continue to be incorporated by reference. This revision is necessary to provide RUS electric borrowers with the latest specifications for constructing their rural underground electric distribution systems using state-of-art materials, equipment, and construction methods. RUS is renumbering and reformating the revised bulletin in accordance with the agency's new publications and directives system.

DATES: *Effective Date:* June 26, 2000.

Incorporation by Reference: IBR approved by the Director, Office of the Federal Register, June 26, 2000.

FOR FURTHER INFORMATION CONTACT: Mr. Trung V. Hiu, Electrical Engineer, Distribution Branch, Electric Staff

Division, Rural Utilities Service, U.S. Department of Agriculture, 1400 Independence Avenue, SW, STOP 1569, Washington, DC 20250–1569. Telephone: (202) 720–1877. Fax: (202) 720–7491.

SUPPLEMENTARY INFORMATION:

Executive Order 12866

This rule has been determined to be not significant for purposes of Executive Order 12866 and, therefore, has not been reviewed by Office of Management and Budget (OMB).

Executive Order 12372

This rule is excluded from the scope of Executive Order 12372, Intergovernmental Consultation, which may require consultation with State and local officials. See the final rule related notice entitled ''Department Programs and Activities Excluded from Executive Order 12372'' (50 FR 47034).

Executive Order 12988

This rule has been reviewed under Executive Order 12988, Civil Justice Reform. RUS has determined that this rule meets the applicable standards provided in section 3 of the Executive Order. In accordance with the Executive Order and the rule: (1) All State and local laws and regulations that are in conflict with this rule will be preempted; (2) no retroactive effect will be given to this rule; and (3) in accordance with § 212(e) of the Department of Agriculture Reorganization Act of 1994 (7 U.S.C. 6912(e)), administrative appeal procedures, if any, are required, must be exhausted prior to initiating litigation against the Department or its agencies.

Regulatory Flexibility Act Certification

The Administrator of RUS has determined that a rule relating to the RUS electric loan program is not a rule as defined in the Regulatory Flexibility Act (5 U.S.C. 601 *et seq.*) and, therefore, the Regulatory Flexibility Act does not apply to this rule. RUS borrowers, as a result of obtaining Federal financing, receive economic benefits that exceed any direct economic costs associated with complying with RUS regulations and requirements.

Information Collection and Recordkeeping Requirements

This rule contains no reporting or recordkeeping provisions requiring Office of Management and Budget (OMB) approval under the Paperwork Reduction Act of 1995 (44 U.S.C. Chapter 35).

National Environmental Policy Act Certification

The Administrator of RUS has determined that this rule will not significantly affect the quality of the human environment as defined by the National Environmental Policy Act of 1969 (42 U.S.C. 4321 *et seq.*) Therefore, this action does not require an environmental impact statement or assessment.

Catalog of Federal Domestic Assistance

The program described by this rule is listed in the Catalog of Federal Domestic Assistance Programs under No. 10.850, Rural Electrification Loans and Loan Guarantees. This catalog is available on a subscription basis from the Superintendent of Documents, U.S. Government Printing Office, Washington, DC 20402–9325. Telephone: (202) 512–1800.

Unfunded Mandates

This final rule contains no Federal mandates (under the regulatory provision of Title II of the Unfunded Mandates Reform Act of 1995) for State, local, and tribal governments or the private sector. Thus, this rule is not subject to the requirements of section 202 and 205 of the Unfunded Mandates Reform Act of 1995.

Background

Pursuant to the Rural Electrification Act of 1936 (7 U.S.C. 901 *et seq.*), the Rural Utilities Service (RUS) is amending 7 CFR Chapter XVII, Part 1728, Electric Standards and Specification for Materials and Construction, by revising RUS Bulletin 50–6 (D–806), Specification and Drawings for Underground Electric Distribution. This revised bulletin is renumbered as RUS Bulletin 1728F–806. RUS maintains a system of bulletins that contains construction standards and specifications for materials and equipment which must be complied with when system facilities are constructed by RUS electric and telecommunications borrowers in accordance with the RUS loan contract. These standards and specifications contain standard construction units, material, and equipment units commonly used in RUS electric and telecommunications borrowers' systems.

RUS Bulletin 50–6 provides standard underground electric distribution construction drawings and specifications of 12.5/7.2 kV and 24.9/14.4 kV underground electric distribution lines. RUS is changing the bulletin number from RUS Bulletin 50–6 to RUS Bulletin 1728F–806. The change in the bulletin number and reformatting is necessary to conform to RUS new publications and directives system. This rule incorporates the bulletin by reference in 7 CFR part 1728.97.

Major changes in the bulletin are described below:

(1) Two new drawings, UC2–1 and UC2–2, have been added as alternative construction to existing drawing UC2.

(2) RUS has determined that the URD INSPECTION FORM and 23 drawings are no longer practical. Therefore, RUS has removed the following drawings: UC3, UC4, UG9A, UG23, UM3–47, UM3–48, UM8–3, UM12–1, UM12–2, UM–26, UM50, UX8 through UX10, and UX12 through UX26.

(3) Some of the specifications cited in the bulletin preface have been altered to comply with the latest codes and regulations and to improve field construction.

(4) The titles of the drawings in the Index of Drawings have been modified to have better descriptions.

Approximately 60 drawings have been revised with one or more of the following changes:

(1) Clearance distance B has been changed to be the distance between open vertical conductors (outer edge nearest to pole) and pole center in accordance to the latest codes.

(2) A B MINIMUM table has been added to appropriate drawings to show proper clearances corresponding to different voltages.

(3) Ground rods have been redrawn to proper grade.

(4) The installation of CAUTION, WARNING, and DANGER signs has been changed to meet the latest codes.

(5) In the material tables, item U hw, CAUTION sign, has been changed to WARNING sign.

(6) In the material tables, item U hp, elbow termination, has been added.

(7) Ground wires between ground rods and connectors have been redrawn as dotted lines.

(8) In boxes labeled B MINIMUM, the v in kv has been capitalized.

(9) Some notes below the DESIGNATE AS headings have been deleted where appropriate.

(10) In the material tables, (load break type) has been removed from item af, cutout descriptions.

(11) Several conductor routes have been redrawn for easier construction and increased performance.

(12) Devices, such as surge arresters, have been redrawn and relocated to reflect the improved designs and to meet the latest construction practices and safety codes.

(13) Crossarms, penta-head bolts, one-line diagrams, grounding pads, and pin

insulators have been added to certain drawings where appropriate.

(14) Blowups have been added to several drawings to emphasize details.

(15) The notes on some drawings have been revised to remove ambiguity and to meet the latest safety codes and construction standards.

On April 8, 1998, RUS published a proposed rule in the **Federal Register**, at 63 FR 17128. RUS received numerous comments from several cooperatives and interested individuals. The followings are the submitted comments and RUS responses:

(1) Set all pad-mounted equipment on concrete vaults. The reinforcing steel in the base is tied to the ground rod. Tests have shown this scheme to provide a very good ground.

Response: RUS disagrees as this practice may not be practical and may not significantly improve grounding in most cases.

(2) Section 7.4: Requires ''mechanical tamp for only 36 inches from major units''—suggests no tamping requirement for the remainder of the trench. Is that the intent?

Response: No. The 36 inches (0.9 meters) is mandatory and is a minimum requirement.

(3) Section 7.5: Does the term ''hole'' refer to ground sleeve, or vault? Should RUS change this term?

Response: Section 7.5 has been removed. This practice is not recommended by RUS.

(4) Section 11.2: The ''not more than one splice per 2,000 feet'' is not practical if conduits and ground sleeves are involved. Splice location markings can be helpful, but not needed as a ''must''.

Response: RUS allows the borrower the option to specify. RUS intention is to limit the number of splices of multi (''scrap'') cables.

(5) Section 12.1: Would RUS consider reseal of the jacket?

Response: As a precaution and to maximize reliability, RUS borrowers must use heat or cold shrink sleeves accepted by RUS (Refer to items U hf and U hy in RUS Information Publication 202–1, List of Materials Acceptable for Use on Systems of RUS Electrification Borrowers).

(6) Section 14.4: RUS may want to consider dead front treatment of this type transformer.

Response: RUS does not accept enclosures such as sectionalizers and transformers unless they are of the dead front design.

(7) Section 25.1: Is it the intention to *require* testing or to recommend testing that would be helpful?

Response: Bulletin 1728F–806 requires that conductor continuity tests be conducted while it recommends that borrowers perform the high potential test. The term ''shall'' has been changed to ''should'' for the high potential test in section 25.1.b.

(8) Drawing UC2–2: Cutouts placed on the opposite side of the crossarm would not expel fuse material on the terminations.

Response: RUS agrees and has made the modifications to accommodate the suggested comment.

(9) Drawing UC5 and UC6: Clarify underground source/or reverse switch. Also, jumpers from switch to overhead lines would not route to the pole like a ground wire. End view of equipment bracket needs to clarify separate phase connections; may need to exaggerate center phase offset.

Response: The center primary conductor has been redrawn to depict a primary conductor not a ground wire. The devices are in line when seen from the sideview.

(10) Drawing UG7: Position of primary bushings not typical of transformer supplied.

Response: RUS is more concerned with detailing how the electrical connections should be completed. The philosophy of electrical connections is important because the bushing layout design may change from time to time. The drawing shown depicts an ANSI Type I transformer. As a result of this connection, the neutral has been moved to the bottom bushing.

(11) Drawings UJ1 and UJ2: Dead front requirement is not clear.

Response: These drawings apply to secondary connector blocks. Dead front construction does not apply here. However, to minimize chances for confusion, a note stating ''insulated cover removed'' has been added to the drawings.

(12) Drawing UK6: Pentahead bolts on a below grade enclosure would seem unnecessary.

Response: Public access and safety concerns for accessible underground facilities are no different than above grade construction.

(13) Sections 10 and 11 Method of Calculating Minimum Conduit Size and Installation in Conduit or Duct: Should RUS provide an explanation of why these two sections were deleted and where a borrower can find information on the installation of wire in conduit?

Response: The previous RUS published method of calculating conduit size is not the best available method. RUS recommends that borrowers contact cable and conduit manufacturers for design and installation instructions.

(14) Drawing UG9A: Should this drawing be retained. It may be useful, as a reference, when retiring this unit from the field.

Response: This construction standard is no longer recommended and has been removed from Bulletin 1728F–806. RUS suggests borrowers refer to RUS Bulletin 1767B–2 for reference of retirement units.

(15) In general, the print size should be increased, especially item letters attached to drawings. It's easy to confuse e and c or a and o.

Response: The font sizes have been increased.

(16) On all terminal drawings, delete reference to parallel arresters. Those haven't been used since MOV arresters came into being in 1982–83. Maybe RUS should reinforce use of MOV's on underground in the material list under Uae surge arrester—MOV only.

Response: RUS agrees and has removed all notes referring to parallel arresters as they are no longer applicable to this RUS construction standard.

(17) Do not specify elbows as part of transformer drawings to be consistent with UM3 and UM33 drawings. If RUS would like to specify, UG7 needs 2 elbows not 1.

Response: RUS agrees to specify two elbows on drawing UG7 to be consistent with other drawings.

(18) On UM3–14 delete UM3–15 and UM3–16. Only difference between –14 and –16 is the pad, which is spaced separately. –15 is obsolete. Change drawing to UM3. Redraw UM3–14 now as UM3 and show a 3-point junction to reflect the real world way the inside of the cabinet would look. What's illustrated doesn't exist.

Response: Drawings UM3–15 and UM3–16 are obsolete and have been removed. For the ground connections to the enclosures, the ground wires are hidden. RUS changed the mounting arrangement to reflect field application.

(19) In drawing UX4, since we show loops in ground rod connections for transformers and pad mount equipment, shouldn't there be 2 connections to the ground rod?

Response: Two connections in an enclosure are required to provide additional mechanical protection and to complete the ground loop. Connections to ground rods should be isolated and, mechanically, should not be disturbed. Therefore, dual connections to the ground rods are not needed.

(20) On UX11 drawing, the note about 3 ft. max. is not needed. This connection has lead length of effectively 0 feet. The note is misapplied.

Response: The note has been removed for the reasons presented in this comment.

(21) Section 18: There is no reference to concrete vaults and their associated covers.

Response: Due to the wide variation of concrete vaults available, RUS does not have specific requirements for concrete vaults.

(22) Units UB1, UB3, UB2–1, UC2–1: The jumper between the top of the terminator and the top of the arrester crosses over the top of the crossarm. This will undoubtedly kill lots of birds.

Response: Due to limitations of what and how we can show details on drawings, jumpers in drawings are for demonstration purpose and may not reflect actual field installation. Usually raptors choose the highest point to perch in search of prey and rest. On the structure referred to in this comment, most raptors can be expected to perch on the pole top rather than the lower crossarm. However, in locations where there is a possibility that raptors may use the lower crossarm, borrowers may utilize insulated jumper wires for the connection cited by the commentor.

(23) Drawings UG17 and UG17B: Shows only one ground rod. Note that UM 48–2 shows two (2) ground rods which will help get below 25 ohms.

Response: The ground rods on the drawings referred to by the commentor are not part of the cited drawings as is intended by their dotted appearance on these drawings. The ground rods are shown on these drawings only for reference perspective purposes. Grounding is required but for details on the grounding, borrowers would refer to the applicable RUS standard drawings on which grounding and ground rod use are included as part of the unit and included in the materials list. The applicable grounding drawings include notes that advise borrowers that depending on the condition and type of soil, installation of multiple ground rods may be necessary to attain a desirable ground resistance. These drawing notes also advise that, because use is site specific, numbers and type of ground rods are to be specified separately by the engineer.

(24) Drawings UM 3–44 and UM 3–45: Live bushing equipment in this type of enclosure is not a good safety practice. Suggest it not be allowed.

Response: The drawings were not shown as intended. As can be seen from the material listings for ''be'' and ''el'', these items are to be supplied with bushing wells and thus the drawings need to be shown using elbows. The drawings were changed to agree with materials used.

(25) Drawing UM6 Page 5 of 8: In the Notes, items Uhf are referred to for resealing concentric neutral wires. What are they?

Response: Item U hf is a cable sealing kit. A note has been added to the drawing to better explain this item and its use. RUS accepted U hf products of various manufacturers are included in RUS Informational Publication 202–1, List of Materials Acceptable for Use on Systems of RUS Electrification Borrowers.

(26) Drawing UA1—UC6: RUS Bulletin 50–6 recommends, p connectors as required, where as, RUS Bulletin 50–3 required, p compression connectors. It would be desirable to maintain a consistent standard in the type of connector required in making the connection from the primary neutral to the pole ground.

Response: RUS requires compression connectors be used for grounding connections on underground construction. Many connector options may be use for overhead connections where conditions will generally be less adverse than underground construction. Compression connectors improve the chances for more permanent connections in underground construction.

(27) Drawing UM48–2: This drawing previously required #2 copper for the grounding wire. This requirement does not seem to be clearly spelled out in the current drawing.

Response: The minimum size of grounding wire to use is specified in the National Electrical Safety Code (NESC). As the size of grounding wire required will vary, RUS no longer includes wire size in the drawing and leaves determination and specification to the design engineer. RUS does not object to using wire sizes which exceed the minimum NESC requirements.

(28) Section 6.4 and 17.1: The two inches of sand is not recommended by the cable manufacturers. Sand serves as a thermal insulator and de-rates the cable ampacity. Also, for cable runs of a ¼ mile or more, a potential galvanic action problem may be created for grounding the cable as required by NESC.

Response: Normally, good soil removed during digging of a trench is used as backfilling material. Sand is used as backfill in situations where removed soil is not suitable backfill material and consists of large rocks and/or sharp objects that could damage the buried cable. Sand may not be the ideal substitute as backfilling material. However, in most rural low load factor circuit use situations sand availability and economic feasibility make it a choice backfilling substitute.

(29) Drawing UK5: Locking mechanism should have provisions for company pad lock.

Response: NESC Rule 381G. requires enclosures to be either locked or otherwise secure against unauthorized entry. RUS requires and accepts enclosures that include the standard penta-head bolt, which provides the NESC intended security. Borrowers wishing to also use padlocking facilities in addition to having and using the required penta-head bolt may do so.

(30) Can a note be included on some drawings (such as UB1 where the neutral is so high) allowing the neutral to be lowered to get it down out of the primary?

Response: The neutral may be moved as long as the resulting installation meets proper clearances and does not violate safety codes.

(31) Several sections state that it is the responsibility of the *borrower* to ensure that the Contractor and the *Owner.* Is the *borrower* not the owner? Maybe this needs to be clarified.

Response: The commenter is correct in that the ''Owner'' and ''Borrower'' are generally the same entity. The ''Owner'' is the term used in RUS standard contracts to refer to the RUS borrower that executes the contract with the contractor. Borrower refers to a RUS borrower that has obtained financing assistance from RUS and has executed a loan contract with RUS. For accuracy purposes, specific bulletin sections deliberately refer to the contract terminology noted.

(32) Several sections state that it is the responsibility of the *borrower* to ensure. This needs to be changed to include the contractor as well.

Response: RUS does not have a regulatory relationship that allows establishment of requirements for contractors. Thus, RUS requires the borrower to ensure that the contractor complies with contract provisions. Borrowers are able to do so easily by use of RUS construction contracts which both the borrower and the contractor sign. RUS contracts make the design specification (RUS Bulletin 1728F–806 in this case) an integral part of the contract under which the contractor is contractually obligated to comply with the specification provisions.

(33) Section 17: Need to define what proper compaction is.

Response: Proper compaction provisions vary greatly and depend on local conditions. Compaction provision should be established by the borrower and completed in accordance with the borrower's satisfaction.

(34) Section 17.1: Is one inch too large for having in backfill?

Response: Backfill with pieces of *less* than one-inch (25 millimeter) size is recommended.

(35) Section 18.1: Gravel or sand is not needed under pads in all cases. This should be optional.

Response: RUS agrees and the term ''shall'' has been changed to ''may.''

(36) Drawings UB2 and UC2: Why is the crossarm shown on a different side of the pole on these two drawings as compared with UB1 and UC1? Why are left side terminals and cutouts not out to end of arms to balance construction?

Response: Drawings UB1 and UC1 detail construction utilizing crossarm mounting arresters while drawings UB2 and UC2 detail construction utilizing bracket mounting arresters. Brackets mount on opposite sides of the pole to provide for accessibility and clearances. Equipment and hardware on the structures have been redrawn to depict balanced construction as suggested.

(37) Drawings UC5 and UC6: Intermediate arresters are shown (we guess that is why they are so large). Most cooperatives use riser pole arresters.

Response: We agree that the arrester size is confusing and revised the drawings to depict pole arrester use.

(38) Drawings UG6, UG7, UG17, UG17–2 and UG17–3: No slack is shown in primary cable. Most cooperatives loop the primary over from the secondary side to give slack so that cables can be parked or switched. Bulletin 50–6 showed the cable this way.

Response: We agree with the utility suggestion in this comment and revised the drawing by adding a note to allow slack in the primary cable installation.

(39) Drawing UG17: Requiring three phase switches as implied by note 6 should be optional.

Response: Note 6 on Drawing UG17 advises that three phase switching ''should'' be installed where ferroresonance may occur. The note is cautionary to help avoid equipment damage on three-phase installations where ferroresonance is a possibility. Because the word ''should'' is used and not ''must'', three-phase switching would not need to be installed in situations where a borrower's engineer determined that ferroresonance would not occur.

(40) Drawing UJ1: A note is needed on the drawing stating that the connector blocks must be insulated to have a ''dead-front'' unit.

Response: These are drawings depicting various types of secondary connector blocks. It is not the intent of the bulletin to show dead front in this drawing. To help dispel possible confusion, the drawing includes a note that states ''insulated covers are not shown''.

(41) Drawing UK6: If this handhole is metal, how is it to be grounded? Sign should be a warning not danger.

Response: RUS accepted metal pedestals must have grounding lugs available on the inside wall. A note has been added advising that all pedestals shall be grounded in accordance with the NESC. The placement of the safety sign has been relocated to the pedestal side (with the penta-head bolt lock) that opens. Both DANGER and WARNING signs have been added to the drawing's material listings. A WARNING sign should be placed on the outside of the enclosure where there is a potential hazard. A DANGER sign should be placed on the inside of the enclosure where there is an imminent hazard.

(42) Drawing UM1–6C: Having three or four different size pads might fit these size transformers better. Note #1 requires 4000# concrete, but most use 3000# which would be adequate for this.

Response: RUS agrees and has amended Note 1 of the drawing to specify the minimum at 3000 pounds per square inch (20 megapascals).

(43) Drawings UM3–44 and UM3–46: This is a dangerous installation since it is not dead front. A bushing insert can be installed in the recloser and then primary cable run to it to make everything deadfront.

Response: The drawings were not shown as intended. As can be seen from the material listings for ''be'' and ''el'', these items are to be supplied with bushing wells and thus the drawings needs to be shown using elbows. The drawings were changed to agree with the materials used.

(44) Drawing UM6–27: Needs to be omitted.

Response: RUS agrees and has deleted this obsolete drawing.

(45) Drawing UM8–2: Ground rod connector has to be above grade as per code. Does the post need to be a minimum size, such as 4 x 4 inches?

Response: Section 250–52(c)(3) of the National Electrical Code requires that the upper end of a driven ground rod be flush with or below ground level unless the rod end and the grounding electrode conductor attachment are protected against physical damage. The RUS drawing shows the top of the rod well beneath grade to depict greater protection for the rod end and the grounding attachment.

RUS has included a note to require a minimum post size of 4 inches (10 centimeters) square or diameter.

(46) Drawing UM8–4: Why not show conduit coming in bottom of meter base to eliminate the elbow?

Response: RUS agrees and has revised the drawing to show cable entering from the base instead of from the side of the meter.

(47) Drawing UM8–6: Why cannot a meter be mounted to transformer? Utilities do this all the time.

Response: RUS does not believe such installations to be prudent. Mounting metering equipment onto the wall of padmounted transformers will require some cutting and drilling which will expose untreated transformer metal surfaces. These surfaces overtime will corrode prematurely and may cause serious problems.

In addition, vibrations from the transformer may affect the meter operation. Also, anytime a transformer is changed out, the meter has to be changed as well.

(48) Drawing UM12: Should this sign meet ANSI Z535 standards also? Would it be a Notice or a Warning or a Caution?

Response: RUS agrees there may be confusion with this drawing and revised the drawing by adding the signal word ''WARNING'' to the label. A note was also added requiring the sign to comply with ANSI Z535.

(49) Drawing UM26: Needs to be omitted. Nobody uses these anymore.

Response: RUS agrees that this drawing depicts outdated construction and removed the drawing.

(50) Drawing UM48–3: Is anode needed for jacketed cable?

Response: The sacrificial anode (Item U si) shown as a hidden line is optional. Some RUS borrowers prefer to install anodes at all ground points because gophers might chew through the jacket and expose the copper neutrals. The sacrificial anode will provide corrosion protection to such exposed neutral wires preventing a loss of neutral integrity.

(51) Drawing UX5: Need to show a minimum distance between ground rods as are done on other drawings.

Response: RUS agrees and has revised the drawing to show a minimum spacing of 6 ft. (1.8 m) between multiple ground rods. (As a general rule, RUS recommends that separation of ground rods be no closer than the length of the ground rods used. When rods are closer to one another than their length they will magnetically influence one another and degrade grounding effectiveness.) A note was also added to advise that multiple rods may not fit inside the enclosure. Where spacing inside an

enclosure does not allow the 6 ft. (1.8 m) separation between multiple ground rods, one rod is to be installed inside the enclosure and the other outside. The ground loop has been redrawn to show a complete loop with a conductor feed from the loop down to the ground rod.

(52) Drawing UM7–1: There is no minimum ground clearance shown on any pole structures. If RUS does not want to show minimum clearances, perhaps a note regarding the source for clearance information would be in order.

Response: RUS agrees there is possible confusion here. Clearances were omitted purposefully because alternative working methods may be implemented along with appropriate alternative working clearances as a means of providing safety. To allay concerns of this comment, RUS revised the drawing by adding a note which states that clearances must meet NESC requirements.

(53) Certain existing drawings (UC5) are a different design from the proposed drawings. Certain materials used are different and the specification will also have different record units.

Response: RUS agrees and has changed the drawing numbers to the applicable drawings.

(54) When RUS changes a construction specification, maybe RUS should add a suffix to indicate that change (example: UC5 change to UC5A or UC5–1, or UC5–98)

Response: RUS agrees and has changed the drawing numbers to the applicable drawings.

(55) Drawing UM48–2: The drawing shows the use of two ground rods in the elevation view, however, the quantity of rods is left open in the material list. I and a number of fellow workers and clients feel that it would be helpful to add a note 3 stating that the quantity of rods is to be determined by the specifier and that the use of two rods rather than one at a multi-phase transformer or enclosure is not a standard or a requirement by RUS.

Response: RUS agrees. Depending on the condition and type of soil, installation of multiple ground rods may be necessary to attain a desirable ground resistance. Thus, ground rods need to be specified separately.

In response to this comment, RUS added the following note to the drawing: ''The quantity of rods is to be determined by the specifier. The use of two rods rather than one at a multi-phase transformer or enclosure is not a standard or a requirement by RUS.''

List of Subjects in 7 CFR Part 1728

Electric power, Incorporation by reference, Loan programs-energy, Rural areas.

For reasons set out in the preamble, RUS is amending 7 CFR part 1728 as follows:

PART 1728—ELECTRIC STANDARDS AND SPECIFICATIONS FOR MATERIALS AND CONSTRUCTION

1. The authority citation for part 1728 continues to read as follows:

Authority: 7 U.S.C. 901 *et seq.*, 1921 *et seq.*, 6941 *et seq.*

2. Section 1728.97 is amended by revising paragraph (a) and by adding, in numerical order, the entry for Bulletin 1728F–806 to paragraph (b). The revision and addition read as follows:

§ 1728.97 Incorporation by reference of electric standards and specifications.

(a) The following electric bulletins have been approved for incorporation by reference by the Director of the Office of the Federal Register. The bulletins containing construction standards (50–3 to 50–6 and 1728F–803 to 1728F–811), may be purchased from the Superintendent of Documents, U.S. Government Printing Office, Washington, DC 20402. The bulletins containing specifications for materials and equipment (50–15 to 50–99 and 1728F–700) may be obtained from the Rural Utilities Service, Program Development and Regulatory Analysis, Stop 1522, Room 4028-S, Washington, DC 20250–1522. The terms ''RUS form'', ''RUS standard form'', ''RUS specification'', and ''RUS bulletin'' have the same meanings as the terms ''REA form'', ''REA standard form'', ''REA specification'', and ''REA bulletin'', respectively unless otherwise indicated. The bulletins are available for inspection at the Office of the Federal Register, 800 North Capitol Street, NW, Suite 700, Washington, DC. These materials are incorporated as they exist on the date of the approval and a notice of any change in these materials will be published in the **Federal Register**.

(b) * * *

Bulletin 1728F–806 (D–806), Specifications and Drawings for Underground Electric Distribution, June 2000.

* * * * *

Dated: May 15, 2000.

Jill Long Thompson,

Under Secretary, Rural Development.

[FR Doc. 00–13293 Filed 5–25–00; 8:45 am]

BILLING CODE 3410–15–P

FEDERAL RESERVE SYSTEM

12 CFR Part 201

[Regulation A]

Extensions of Credit by Federal Reserve Banks; Change in Discount Rate

AGENCY: Board of Governors of the Federal Reserve System.

ACTION: Final rule.

SUMMARY: The Board of Governors has amended its Regulation A on Extensions of Credit by Federal Reserve Banks to reflect its approval of an increase in the basic discount rate at each Federal Reserve Bank. The Board acted on requests submitted by the Boards of Directors of the twelve Federal Reserve Banks.

DATES: The amendments to part 201 (Regulation A) were effective May 16, 2000. The rate changes for adjustment credit were effective on the dates specified in 12 CFR 201.51.

FOR FURTHER INFORMATION CONTACT: Jennifer J. Johnson, Secretary of the Board, at (202) 452–3259; for users of Telecommunications Device for the Deaf (TDD), contact Janice Simms, at (202) 872–4984, Board of Governors of the Federal Reserve System, 20th and C Streets NW, Washington, D.C. 20551.

SUPPLEMENTARY INFORMATION: Pursuant to the authority of sections 10(b), 13, 14, 19, *et al.,* of the Federal Reserve Act, the Board has amended its Regulation A (12 CFR part 201) to incorporate changes in discount rates on Federal Reserve Bank extensions of credit. The discount rates are the interest rates charged to depository institutions when they borrow from their district Reserve Banks.

The ''basic discount rate'' is a fixed rate charged by Reserve Banks for adjustment credit and, at the Reserve Banks' discretion, for extended credit for up to 30 days. In increasing the basic discount rate from 5.5 percent to 6.0 percent, the Board acted on requests submitted by the Boards of Directors of the twelve Federal Reserve Banks. The new rates were effective on the dates specified below. The 50-basis-point increase in the discount rate was associated with a similar increase in the federal funds rate approved by the Federal Open Market Committee and announced at the same time.

Increases in demand have remained in excess of even the rapid pace of productivity-driven gains in potential supply, exerting continued pressure on resources. The Board and the Reserve Banks are concerned that this disparity

in the growth of demand and potential supply will continue, which could foster inflationary imbalances that would undermine the economy's outstanding performance. Against the background of the long-term goals of price stability and sustainable economic growth and of the information currently available, the Board and the Reserve Banks believe the risks are weighted mainly toward conditions that may generate heightened inflation pressures in the foreseeable future.

Regulatory Flexibility Act Certification

Pursuant to section 605(b) of the Regulatory Flexibility Act (5 U.S.C. 605(b)), the Board certifies that the change in the basic discount rate will not have a significant adverse economic impact on a substantial number of small entities. The rule does not impose any additional requirements on entities affected by the regulation.

Administrative Procedure Act

The provisions of 5 U.S.C. 553(b) relating to notice and public participation were not followed in connection with the adoption of the amendment because the Board for good cause finds that delaying the change in the basic discount rate in order to allow notice and public comment on the change is impracticable, unnecessary, and contrary to the public interest in fostering price stability and sustainable economic growth.

The provisions of 5 U.S.C. 553(d) that prescribe 30 days prior notice of the effective date of a rule have not been followed because section 553(d) provides that such prior notice is not necessary whenever there is good cause for finding that such notice is contrary to the public interest. As previously stated, the Board determined that delaying the changes in the basic discount rate is contrary to the public interest.

List of Subjects in 12 CFR Part 201

Banks, banking, Credit, Federal Reserve System.

For the reasons set out in the preamble, 12 CFR part 201 is amended as set forth below:

PART 201—EXTENSIONS OF CREDIT BY FEDERAL RESERVE BANKS (REGULATION A)

1. The authority citation for 12 CFR part 201 continues to read as follows:

Authority: 12 U.S.C. 343 *et seq.*, 347a, 347b, 347c, 347d, 348 *et seq.*, 357, 374, 374a and 461.

2. Section 201.51 is revised to read as follows:

§ 201.51 Adjustment credit for depository institutions.

The rates for adjustment credit provided to depository institutions under § 201.3(a) are:

Federal Reserve Bank	Rate	Effective
Boston	6.0	May 16, 2000.
New York	6.0	May 19, 2000.
Philadelphia	6.0	May 18, 2000.
Cleveland	6.0	May 16, 2000.
Richmond	6.0	May 16, 2000.
Atlanta	6.0	May 17, 2000.
Chicago	6.0	May 17, 2000.
St. Louis	6.0	May 18, 2000.
Minneapolis	6.0	May 18, 2000.
Kansas City	6.0	May 17, 2000.
Dallas	6.0	May 17, 2000.
San Francisco	6.0	May 16, 2000.

By order of the Board of Governors of the Federal Reserve System, May 23, 2000.

Jennifer J. Johnson,

Secretary of the Board.

[FR Doc. 00–13309 Filed 5–25–00; 8:45 am]

BILLING CODE 6210–01–P

DEPARTMENT OF TRANSPORTATION

Federal Aviation Administration

14 CFR Part 39

[Docket No. 99–NM–65–AD; Amendment 39–11741; AD 2000–10–17]

RIN 2120–AA64

Airworthiness Directives; Boeing Model 747 Series Airplanes Equipped With Pratt & Whitney JT9D–70 Series Engines

AGENCY: Federal Aviation Administration, DOT.

ACTION: Final rule.

SUMMARY: This amendment adopts a new airworthiness directive (AD), applicable to certain Boeing Model 747 series airplanes, that requires inspections, tests, and certain modifications of the thrust reverser control and indication system and wiring on each engine, and corrective action, if necessary. This amendment also requires installation of a terminating modification, and repetitive functional tests of that installation to detect discrepancies, and repair, if necessary. This amendment is prompted by the results of a safety review, which revealed that in-flight deployment of a thrust reverser could result in significant reduction in airplane controllability. The actions specified by this AD are intended to ensure the integrity of the fail-safe features of the thrust reverser system by preventing possible failure modes, which could result in inadvertent deployment of a thrust reverser during flight, and consequent reduced controllability of the airplane.

DATES: Effective June 30, 2000.

The incorporation by reference of certain publications listed in the regulations is approved by the Director of the Federal Register as of June 30, 2000.

ADDRESSES: The service information referenced in this AD may be obtained from Boeing Commercial Airplane Group, P.O. Box 3707, Seattle, Washington 98124–2207. This information may be examined at the Federal Aviation Administration (FAA), Transport Airplane Directorate, Rules Docket, 1601 Lind Avenue, SW., Renton, Washington; or at the Office of the Federal Register, 800 North Capitol Street, NW., suite 700, Washington, DC.

FOR FURTHER INFORMATION CONTACT: Larry Reising, Aerospace Engineer, Propulsion Branch, ANM–140S, FAA, Transport Airplane Directorate, Seattle Aircraft Certification Office, 1601 Lind Avenue, SW., Renton, Washington 98055–4056; telephone (425) 227–2683; fax (425) 227–1181.

SUPPLEMENTARY INFORMATION: A proposal to amend part 39 of the Federal Aviation Regulations (14 CFR part 39) to include an airworthiness directive (AD) that is applicable to certain Boeing Model 747 series airplanes was published in the **Federal Register** on February 4, 2000 (65 FR 5459). That action proposed to require inspections, tests, and certain modifications of the thrust reverser control and indication system and wiring on each engine, and corrective action, if necessary. That action also proposed to require installation of a terminating modification, and repetitive functional tests of that installation to detect discrepancies, and repair, if necessary.

Comments

Interested persons have been afforded an opportunity to participate in the making of this amendment. No comments were submitted in response to the proposal or the FAA's determination of the cost to the public.

Conclusion

The FAA has determined that air safety and the public interest require the adoption of the rule as proposed.

Cost Impact

There are approximately 7 Model 747 series airplanes of the affected design in the worldwide fleet. The FAA estimates

that 6 airplanes of U.S. registry will be affected by this AD.

It will take approximately 32 work hours (8 work hours per engine) per airplane, to accomplish the required thrust reverser inspection, modification, and test, described in 747–78A2149, Revision 1, or Revision 2, at an average labor rate of $60 per work hour. Based on these figures, the cost impact of the AD on U.S. operators is estimated to be $11,520, or $1,920 per airplane.

It will take approximately 8 work hours (2 work hours per engine) per airplane, to accomplish the required 1,000-flight-hour inspections described in Boeing Service Bulletin 747–78A2159, at an average labor rate of $60 per work hour. Based on these figures, the cost impact of the inspection required by this AD on U.S. operators is estimated to be $2,880, or $480 per airplane, per inspection cycle.

It will take approximately 20 work hours (5 work hours per engine) per airplane, to accomplish the required 18-month thrust reverser system checks described in Boeing Service Bulletin 747–78A2159, at an average labor rate of $60 per work hour. Based on these figures, the cost impact of the test required by this AD on U.S. operators is estimated to be $7,200, or $1,200 per airplane, per test cycle.

It will take approximately 544 work hours per airplane, to accomplish the required provisional wiring, at an average labor rate of $60 per work hour. Required parts will be provided by the manufacturer at no cost to the operators. Based on these figures, the cost impact of the AD on U.S. operators is estimated to be $195,840, or $32,640 per airplane.

It will take approximately 593 work hours per airplane, to accomplish the required sync lock installation, at an average labor rate of $60 per work hour. Required parts will be provided by the manufacturer at no cost to the operators. Based on these figures, the cost impact of the installation required by this AD on U.S. operators is estimated to be $213,480, or $35,580 per airplane.

It will take approximately 4 work hours per airplane, to accomplish the required functional test of the additional locking system, at an average labor rate of $60 per work hour. Based on these figures, the cost impact of the test required by this AD on U.S. operators is estimated to be $1,680, or $240 per airplane, per test cycle.

The cost impact figures discussed above are based on assumptions that no operator has yet accomplished any of the requirements of this AD action, and that no operator would accomplish those actions in the future if this AD were not adopted.

Regulatory Impact

The regulations adopted herein will not have a substantial direct effect on the States, on the relationship between the national Government and the States, or on the distribution of power and responsibilities among the various levels of government. Therefore, it is determined that this final rule does not have federalism implications under Executive Order 13132.

For the reasons discussed above, I certify that this action (1) is not a ''significant regulatory action'' under Executive Order 12866; (2) is not a ''significant rule'' under DOT Regulatory Policies and Procedures (44 FR 11034, February 26, 1979); and (3) will not have a significant economic impact, positive or negative, on a substantial number of small entities under the criteria of the Regulatory Flexibility Act. A final evaluation has been prepared for this action and it is contained in the Rules Docket. A copy of it may be obtained from the Rules Docket at the location provided under the caption **ADDRESSES**.

List of Subjects in 14 CFR Part 39

Air transportation, Aircraft, Aviation safety, Incorporation by reference, Safety.

Adoption of the Amendment

Accordingly, pursuant to the authority delegated to me by the Administrator, the Federal Aviation Administration amends part 39 of the Federal Aviation Regulations (14 CFR part 39) as follows:

PART 39—AIRWORTHINESS DIRECTIVES

1. The authority citation for part 39 continues to read as follows:

Authority: 49 U.S.C. 106(g), 40113, 44701.

§ 39.13 [Amended]

2. Section 39.13 is amended by adding the following new airworthiness directive:

2000–10–17 Boeing: Amendment 39–11741. Docket 99-NM–65-AD.

Applicability: Model 747 series airplanes equipped with Pratt & Whitney JT9D–70 series engines; certificated in any category.

Note 1: This AD applies to each airplane identified in the preceding applicability provision, regardless of whether it has been modified, altered, or repaired in the area subject to the requirements of this AD. For airplanes that have been modified, altered, or repaired so that the performance of the requirements of this AD is affected, the owner/operator must request approval for an alternative method of compliance in accordance with paragraph (g) of this AD. The request should include an assessment of the effect of the modification, alteration, or repair on the unsafe condition addressed by this AD; and, if the unsafe condition has not been eliminated, the request should include specific proposed actions to address it.

Compliance: Required as indicated, unless accomplished previously.

To prevent inadvertent deployment of a thrust reverser during flight and consequent reduced controllability of the airplane, accomplish the following:

Inspection/Repair

(a) Within 200 flight hours or 50 flight cycles after the effective date of this AD, whichever occurs later: Inspect the thrust reverser wiring on each engine to detect discrepancies, in accordance with Boeing Service Bulletin 747–78A2149, Revision 1, dated May 9, 1996, or Revision 2, dated August 29, 1996. Prior to further flight, repair any discrepancy, in accordance with the service bulletin.

Modification and Tests

(b) Within 5,000 flight hours or 500 flight cycles after the effective date of this AD, whichever occurs later: Accomplish the thrust reverser wiring modification on each engine in accordance with Boeing Service Bulletin 747–78A2149, Revision 1, dated May 9, 1996, or Revision 2 dated August 29, 1996.

(1) Concurrent with accomplishment of Boeing Service Bulletin 747–78A2149, Revision 1 or Revision 2: Accomplish the modification of the thrust reverser control system wiring specified in Rohr Service Bulletin TBC-CNS 78–32, Revision 1, dated August 20, 1996.

(2) Prior to further flight following accomplishment of the modification specified in paragraphs (b) and (b)(1): Perform an operational test of the thrust reverser wiring on each engine to detect discrepancies in accordance with Boeing Service Bulletin 747–78A2149, Revision 1, dated May 9, 1996, or Revision 2 dated August 29, 1996. Prior to further flight, correct any discrepancy detected, in accordance with the service bulletin.

Repetitive Inspections and Tests

(c) Perform the inspections and tests of the thrust reverser control and indication system to detect discrepancies at the times specified in paragraphs (c)(1) and (c)(2) of this AD, in accordance with Boeing Alert Service Bulletin 747–78A2159, dated May 18, 1995.

(1) Within 90 days after the effective date of this AD, inspect in accordance with Part III, ''1,000 Flight Hour Inspections'' of the Accomplishment Instructions of the alert service bulletin. Repeat at intervals not to exceed 1,000 flight hours until accomplishment of paragraph (f) of this AD.

(2) Within 1,500 flight hours or 4 months after the effective date of this AD, whichever occurs later, inspect and test in accordance with Part III, ''18 Month Thrust Reverser System Checks'' of the Accomplishment Instructions of the alert service bulletin. Repeat at intervals not to exceed 18 months until accomplishment of paragraph (e) of this AD.

Corrective Actions

(d) If any inspection or test required by paragraph (c) of this AD cannot be successfully performed as specified in the referenced service bulletin, or if any discrepancy is detected during any inspection or test, prior to further flight, repair in accordance with Boeing Alert Service Bulletin 747–78A2159, dated May 18, 1995. Additionally, prior to further flight, any failed inspection or test required by paragraph (c) of this AD must be repeated and successfully accomplished.

Terminating Action

(e) Accomplish the requirements of paragraphs (e)(1) and (e)(2) of this AD at the times specified in those paragraphs. Accomplishment of these actions constitutes terminating action for the repetitive inspections and tests required by paragraph (c) of this AD.

(1) Within 36 months after the effective date of this AD: Install an additional locking system on each engine thrust reverser in accordance with the Accomplishment Instructions of Boeing Service Bulletin 747–78–2153, Revision 1, dated November 27, 1996.

(2) Prior to or concurrent with accomplishment of Boeing Service Bulletin 747–78–2153, Revision 1: Accomplish the installation of provisional wiring for the locking system on the thrust reversers in accordance with Boeing Service Bulletins 747–78–2135, dated August 31, 1995; and 747–78A2149, Revision 1, dated May 9, 1996, or Revision 2, dated August 29, 1996. Additionally, concurrent with accomplishment of Boeing Service Bulletin 747–78–2153, Revision 1, accomplish the installation of the provisional wiring described previously in accordance with Rohr Service Bulletin TBC-CNS 78–33, Revision 1, dated August 20, 1996.

Repetitive Functional Tests

(f) Within 4,000 hours time-in-service after accomplishment of paragraph (e) of this AD: Perform a functional test to detect discrepancies of the additional locking system on each thrust reverser, in accordance with Appendix 1 (including Figures 1 and 2) of this AD. Prior to further flight, correct any discrepancy detected, in accordance with the procedures described in the Boeing 747 Airplane Maintenance Manual. Repeat the functional test thereafter at intervals not to exceed 4,000 hours time-in-service.

Alternative Methods of Compliance

(g) An alternative method of compliance or adjustment of the compliance time that provides an acceptable level of safety may be used if approved by the Manager, Seattle Aircraft Certification Office (ACO), FAA, Transport Airplane Directorate. Operators shall submit their requests through an appropriate FAA Principal Maintenance Inspector, who may add comments and then send it to the Manager, Seattle ACO.

Note 2: Information concerning the existence of approved alternative methods of compliance with this AD, if any, may be obtained from the Seattle ACO.

Special Flight Permit

(h) Special flight permits may be issued in accordance with sections 21.197 and 21.199 of the Federal Aviation Regulations (14 CFR 21.197 and 21.199) to operate the airplane to a location where the requirements of this AD can be accomplished.

Incorporation by Reference

(i) Except as provided by paragraph (f) of this AD, the actions shall be done in accordance with Boeing Service Bulletin 747–78A2149, Revision 1, dated May 9, 1996; Boeing Service Bulletin 747–78A2149, Revision 2, dated August 29, 1996; Boeing Alert Service Bulletin 747–78A2159, dated May 18, 1995; Boeing Service Bulletin 747–78–2135, dated August 31, 1995; Boeing Service Bulletin 747–78–2153, Revision 1, dated November 27, 1996; Rohr Service Bulletin TBC–CNS 78–32, Revision 1, dated August 20, 1996; and Rohr Service Bulletin TBC–CNS 78–33, Revision 1, dated August 20, 1996; as applicable. Rohr Service Bulletin TBC–CNS 78–32, Revision 1, dated August 20, 1996 contains the following list of effective pages:

Page No.	Revision level shown on page	Date shown on page
1, 3, 5–8, 10–11, 13–14, 16–18	1	August 20, 1996.
2, 4, 9, 12, 15	Original	May 25, 1995.

Rohr Service Bulletin TBC–CNS 78–33, Revision 1, dated August 20, 1996 contains the following list of effective pages:

Page No.	Revision level shown on page	Date shown on page
1, 3–55	1	August 20, 1996.
2	Original	December 11, 1995.

This incorporation by reference was approved by the Director of the Federal Register in accordance with 5 U.S.C. 552(a) and 1 CFR part 51. Copies may be obtained from Boeing Commercial Airplane Group, P.O. Box 3707, Seattle, Washington 98124–2207. Copies may be inspected at the FAA, Transport Airplane Directorate, 1601 Lind Avenue, SW., Renton, Washington; or at the Office of the Federal Register, 800 North Capitol Street, NW., suite 700, Washington, DC.

(j) This amendment becomes effective on June 30, 2000.

Appendix 1

Thrust Reverser Sync-Lock Integrity Test

1. General

A. Equipment and Materials

(1) Thrust reverser flex drive adapter—196K8004–1 or 196K8004–3; Rohr Industries, Inc., Chula Vista, California 92012.

2. Thrust Reverser Sync-Lock Integrity Test

B. Prepare for the thrust reverser sync lock test.

(1) Open applicable T/R CONT & BLEED SYS circuit breaker on P12 circuit breaker panel.

(2) Open fan cowl doors (Ref 71–11–02, Maintenance Practices).

(3) Check that forward and aft circumferential latches and all tension latches are engaged and locked.

(4) Depress drive unit latch operating arm and retain by engaging latch arm (detail C).

(5) Disengage stow latch hook on left and right thrust reversers (detail D).

(6) On either lower slave actuator (detail B), either remove coverplate from forward drive pad or remove locking plug from lower drive pad.

(7) Move left-hand sync-lock lever to the unlocked position.

(8) Using appropriate drive adapter (196K8004–1 at forward drive pad or 196K8004–3 at lower drive pad), attempt to manually deploy sleeves.

CAUTION: DO NOT APPLY A TORQUE LOAD OF MORE THAN 75 POUND-INCHES TO THE ACTUATOR; A GREATER TORQUE LOAD CAN CAUSE DAMAGE TO THE MECHANISM.

(9) If sleeves move, replace the right-hand sync-lock.

(10) Move left-hand sync-lock lever to the locked position.

(11) Move right-hand sync-lock lever to the unlocked position.

(12) Repeat step (8) above.

(13) If sleeves move, replace the left-hand sync-lock.

(14) Move left-hand sync-lock lever to the unlocked position.

(15) Rotate actuator gearshaft to fully stow the sleeves.

(16) When translating sleeves reach stowed position, check that stow latch hooks have engaged fixed hooks on both sides (detail D).

(17) Depress latch operating arm and disengage latch arm (detail C); allow latch arm to raise.

(18) After releasing arm, verify latch engagement by attempting to rotate feedback gear on drive unit using ¼-inch square drive; gear shall not rotate in excess of 0.1 of a turn.

CAUTION: DO NOT APPLY A TORQUE LOAD OF MORE THAN 25 POUND-INCHES ON FEEDBACK GEAR; A GREATER TORQUE LOAD CAN CAUSE DAMAGE TO THE MECHANISM.

(19) As applicable, install locking plug (with square section facing away from drive pad) or coverplate on actuator drive pad. Secure plug or plate with bolts tightened to 50–70 pound-inches.

(20) Move both left-and right-hand sync-lock levers to the locked position.

(21) Close fan cowl doors (Ref 71–11–02, Maintenance Practices).

(22) Close T/R CONT & BLEED SYS circuit breaker.

(23) Repeat the sync-lock integrity test on all remaining thrust reversers.

BILLING CODE 4910–13–U

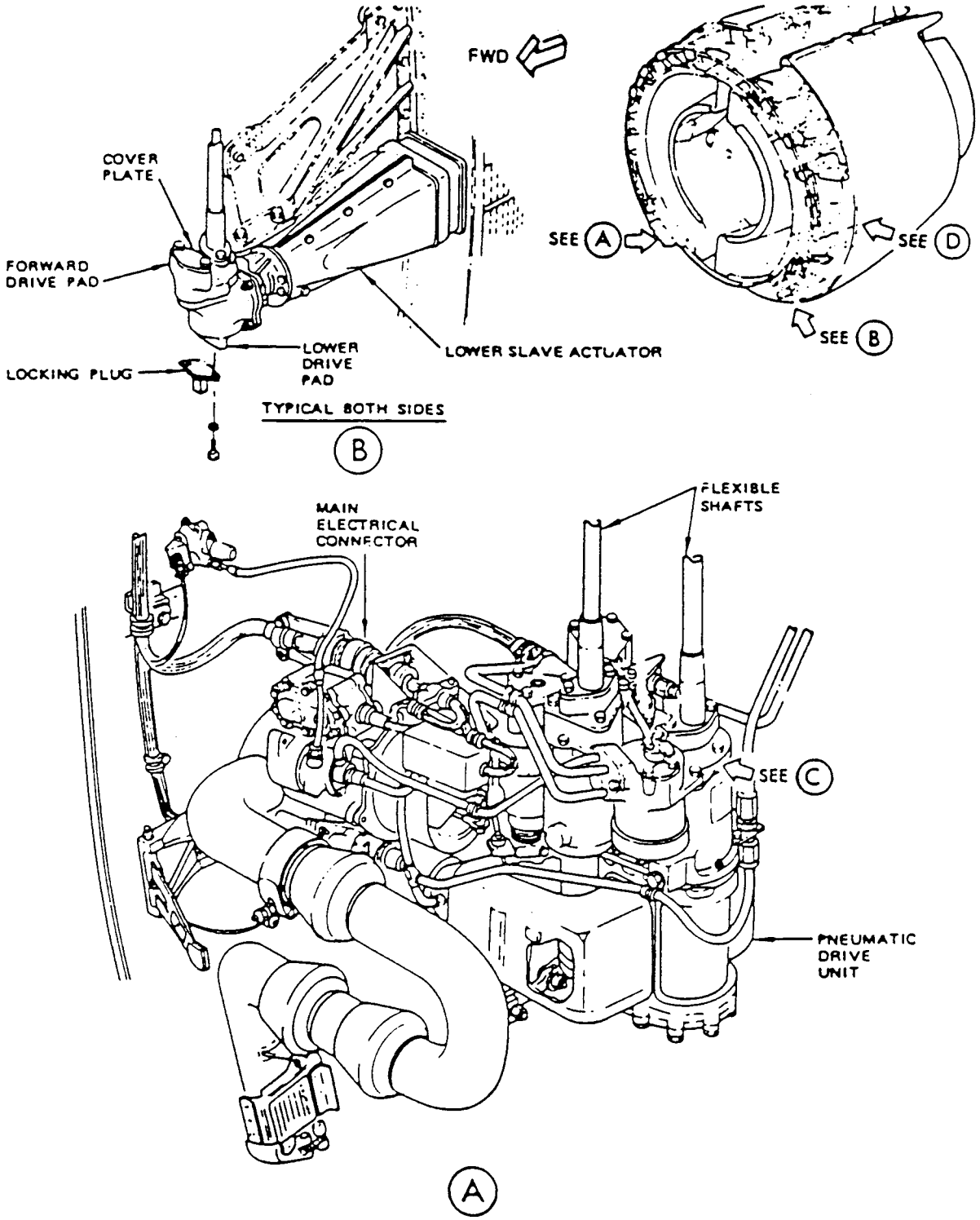
FWD
COVER PLATE
FORWARD DRIVE PAD
LOCKING PLUG
LOWER DRIVE PAD
LOWER SLAVE ACTUATOR
TYPICAL BOTH SIDES
B
SEE A
SEE D
SEE B
MAIN ELECTRICAL CONNECTOR
FLEXIBLE SHAFTS
SEE C
PNEUMATIC DRIVE UNIT
A

Figure 1

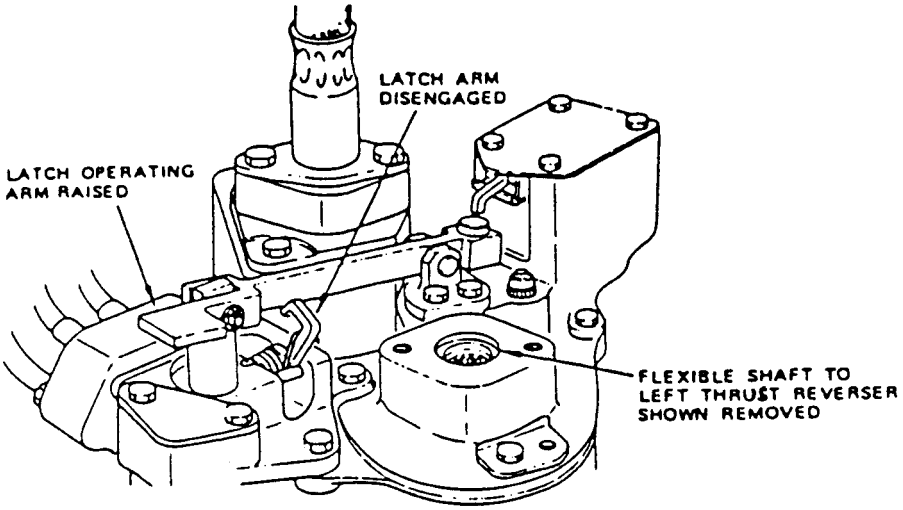

DRIVE UNIT LATCH ENGAGED

C

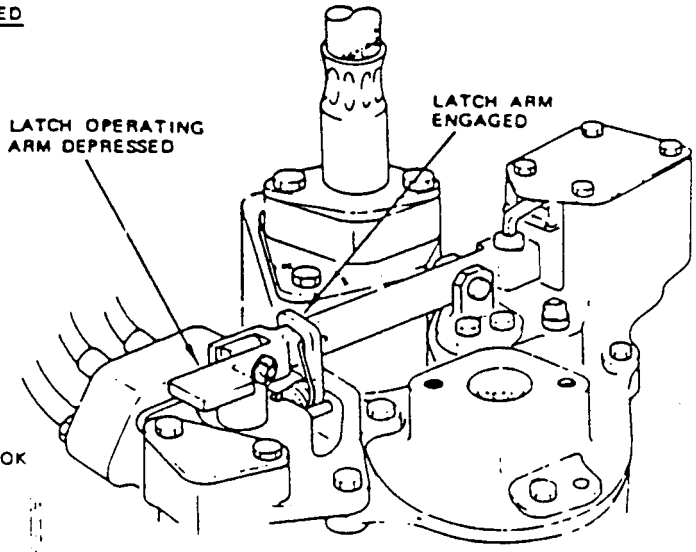

DRIVE UNIT LATCH DISENGAGED

C

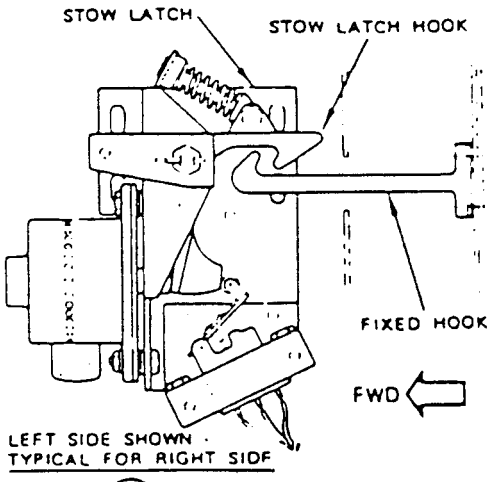

LEFT SIDE SHOWN
TYPICAL FOR RIGHT SIDE

D

Figure 2

Issued in Renton, Washington, on May 16, 2000.

Donald L. Riggin,

Acting Manager, Transport Airplane Directorate, Aircraft Certification Service.

[FR Doc. 00–12812 Filed 5–25–00; 8:45 am]

BILLING CODE 4910–13–C

DEPARTMENT OF TRANSPORTATION

Federal Aviation Administration

14 CFR Part 39

[Docket No. 99–NM–360–AD; Amendment 39–11743; AD 2000–10–19]

RIN 2120–AA64

Airworthiness Directives; Israel Aircraft Industries, Ltd., Model 1125 Westwind Astra and Astra SPX Series Airplanes

AGENCY: Federal Aviation Administration, DOT.

ACTION: Final rule.

SUMMARY: This amendment adopts a new airworthiness directive (AD), applicable to certain Israel Aircraft Industries, Ltd., Model 1125 Westwind Astra and Astra SPX series airplanes, that requires replacement of the existing pneumatic de-icing boot pressure indicator switch with a newly designed switch. This amendment is prompted by an occurrence on a similar airplane model in which the pneumatic de-icing boot indication light may have provided the flightcrew with misleading information as to the proper functioning of the de-icing boots. The actions specified by this AD are intended to prevent ice accumulation on the airplane leading edges, which could result in reduced controllability of the airplane.

DATES: Effective June 30, 2000.

The incorporation by reference of certain publications listed in the regulations is approved by the Director of the Federal Register as of June 30, 2000.

ADDRESSES: The service information referenced in this AD may be obtained from Galaxy Aerospace Corporation, One Galaxy Way, Fort Worth Alliance Airport, Fort Worth, Texas 76177. This information may be examined at the Federal Aviation Administration (FAA), Transport Airplane Directorate, Rules Docket, 1601 Lind Avenue, SW., Renton, Washington; or at the Office of the Federal Register, 800 North Capitol Street, NW., suite 700, Washington, DC.

FOR FURTHER INFORMATION CONTACT: Norman B. Martenson, Manager, International Branch, ANM–116, FAA, Transport Airplane Directorate, 1601 Lind Avenue, SW., Renton, Washington 98055–4056; telephone (425) 227–2110; fax (425) 227–1149.

SUPPLEMENTARY INFORMATION: A proposal to amend part 39 of the Federal Aviation Regulations (14 CFR part 39) to include an airworthiness directive (AD) that is applicable to all Israel Aircraft Industries, Ltd., Model 1125 Westwind Astra and Astra SPX series airplanes was published in the **Federal Register** on January 24, 2000 (65 FR 3617). That action proposed to require replacement of the existing pneumatic de-icing boot pressure indicator switch with a newly designed switch.

Interested persons have been afforded an opportunity to participate in the making of this amendment. No comments were submitted in response to the proposal or the FAA's determination of the cost to the public.

Changes to the Proposed AD

Since issuance of the proposed AD, the manufacturer has issued Astra Alert Service Bulletin 1125–30A–199, dated April 17, 2000, which describes procedures for replacement of the wing and tail de-icing boot pressure indicator switches with improved switches. The Civil Aviation Administration of Israel (CAAI), which is the airworthiness authority for Israel, classified this service bulletin as mandatory. Additionally, the CAAI previously issued Israeli airworthiness directive 30–00–02–05, dated February 24, 2000, in order to assure the continued airworthiness of these airplanes in Israel.

The FAA has determined that the replacement described in the service bulletin provides an adequate method of addressing the unsafe condition identified in this AD. Paragraph (a) of the AD has been revised to include that replacement as an acceptable means of compliance to the requirements of the AD. The applicability of the AD has also been revised to exclude airplanes having serial number 116 and up, on which the replacement will be installed in production.

The FAA has also revised the ''Cost Impact'' section of the AD to provide the estimated cost of the replacement in accordance with the previously described service bulletin, and to revise the number of affected airplanes of U.S. registry.

Conclusion

After careful review of the available data, the FAA has determined that air safety and the public interest require the adoption of the rule with the changes described previously. The FAA has determined that these changes will neither increase the economic burden on any operator nor increase the scope of the AD.

Cost Impact

The FAA estimates that 89 airplanes of U.S. registry will be affected by this AD.

Should an operator elect to accomplish the replacement in accordance with Astra Alert Service Bulletin 1125–30A–199, it will take approximately 2 work hours per airplane to accomplish it, at an average labor rate of $60 per work hour. Required parts may cost as much as $1,455 per airplane. Based on these figures, the cost impact of the replacement on U.S. operators is estimated to be as much as $1,575 per airplane.

Regulatory Impact

The regulations adopted herein will not have a substantial direct effect on the States, on the relationship between the national Government and the States, or on the distribution of power and responsibilities among the various levels of government. Therefore, it is determined that this final rule does not have federalism implications under Executive Order 13132.

For the reasons discussed above, I certify that this action (1) is not a ''significant regulatory action'' under Executive Order 12866; (2) is not a ''significant rule'' under DOT Regulatory Policies and Procedures (44 FR 11034, February 26, 1979); and (3) will not have a significant economic impact, positive or negative, on a substantial number of small entities under the criteria of the Regulatory Flexibility Act. A final evaluation has been prepared for this action and it is contained in the Rules Docket. A copy of it may be obtained from the Rules Docket at the location provided under the caption **ADDRESSES.**

List of Subjects in 14 CFR Part 39

Air transportation, Aircraft, Aviation safety, Incorporation by reference, Safety.

Adoption of the Amendment

Accordingly, pursuant to the authority delegated to me by the Administrator, the Federal Aviation Administration amends part 39 of the Federal Aviation Regulations (14 CFR part 39) as follows:

PART 39—AIRWORTHINESS DIRECTIVES

1. The authority citation for part 39 continues to read as follows:

Authority: 49 U.S.C. 106(g), 40113, 44701.

§ 39.13 [Amended]

2. Section 39.13 is amended by adding the following new airworthiness directive:

2000–10–19 Israel Aircraft Industries, Ltd.: Amendment 39–11743. Docket 99–NM–360–AD.

Applicability: Model 1125 Westwind Astra and Astra SPX series airplanes, serial numbers 004 through 115 inclusive; certificated in any category.

Note 1: This AD applies to each airplane identified in the preceding applicability provision, regardless of whether it has been modified, altered, or repaired in the area subject to the requirements of this AD. For airplanes that have been modified, altered, or repaired so that the performance of the requirements of this AD is affected, the owner/operator must request approval for an alternative method of compliance in accordance with paragraph (b) of this AD. The request should include an assessment of the effect of the modification, alteration, or repair on the unsafe condition addressed by this AD; and, if the unsafe condition has not been eliminated, the request should include specific proposed actions to address it.

Compliance: Required as indicated, unless accomplished previously.

To prevent ice accumulation on the airplane leading edges, which could result in reduced controllability of the airplane, accomplish the following:

Modification

(a) Within 1 year after the effective date of this AD, replace the pneumatic de-icing boot pressure indicator switch with a switch that activates the flight deck indicator light at 15 pounds per square inch gage, in accordance with Astra Alert Service Bulletin 1125–30A–199, dated April 17, 2000, or in accordance with a method approved by the Manager, International Branch, ANM–116, FAA, Transport Airplane Directorate.

Alternative Methods of Compliance

(b) An alternative method of compliance or adjustment of the compliance time that provides an acceptable level of safety may be used if approved by the Manager, International Branch, ANM–116. Operators shall submit their requests through an appropriate FAA Principal Maintenance Inspector, who may add comments and then send it to the Manager, International Branch, ANM–116.

Note 2: Information concerning the existence of approved alternative methods of compliance with this AD, if any, may be obtained from the International Branch, ANM–116.

Special Flight Permits

(c) Special flight permits may be issued in accordance with sections 21.197 and 21.199 of the Federal Aviation Regulations (14 CFR 21.197 and 21.199) to operate the airplane to a location where the requirements of this AD can be accomplished.

Incorporation by Reference

(d) Except as provided by paragraph (a) of this AD, the actions shall be done in accordance with Astra Alert Service Bulletin 1125–30A–199, dated April 17, 2000. This incorporation by reference was approved by the Director of the Federal Register in accordance with 5 U.S.C. 552(a) and 1 CFR part 51. Copies may be obtained from Galaxy Aerospace Corporation, One Galaxy Way, Fort Worth Alliance Airport, Fort Worth, Texas 76177. Copies may be inspected at the FAA, Transport Airplane Directorate, 1601 Lind Avenue, SW., Renton, Washington; or at the Office of the Federal Register, 800 North Capitol Street, NW., suite 700, Washington, DC.

Note 3: The subject of this AD is addressed in Israeli airworthiness directive 30–00–02–05, dated February 24, 2000.

(e) This amendment becomes effective on June 30, 2000.

Issued in Renton, Washington, on May 16, 2000.

Donald L. Riggin,

Acting Manager, Transport Airplane Directorate, Aircraft Certification Service.

[FR Doc. 00–12813 Filed 5–25–00; 8:45 am]

BILLING CODE 4910–13–U

DEPARTMENT OF TRANSPORTATION

Federal Aviation Administration

14 CFR Part 39

[Docket No. 99–NM–251–AD; Amendment 39–11742; AD 2000–10–18]

RIN 2120–AA64

Airworthiness Directives; Airbus Industrie Model A300, A300–600, and A310 Series Airplanes

AGENCY: Federal Aviation Administration, DOT.

ACTION: Final rule.

SUMMARY: This amendment supersedes an existing airworthiness directive (AD), applicable to certain Airbus Industrie Model A300, A300–600, and A310 series airplanes, that currently requires inspections to detect cracks in the lower spar axis of the pylons between ribs 6 and 7, and repair, if necessary. For certain Model A310 series airplanes, this amendment reduces the currently required inspection thresholds and intervals, and removes an option for a terminating modification. This amendment is prompted by issuance of mandatory continuing airworthiness information by a foreign civil airworthiness authority. The actions specified by this AD are intended to prevent such fatigue cracking, which could result in reduced structural integrity of the engine pylon's lower spar, and possible separation of the engine from the airplane.

DATES: Effective June 30, 2000.

The incorporation by reference of certain publications listed in the regulations is approved by the Director of the Federal Register as of June 30, 2000.

The incorporation by reference of certain other publications, as listed in the regulations, was approved previously by the Director of the Federal Register as of June 28, 1996 (61 FR 26091, May 24, 1996).

ADDRESSES: The service information referenced in this AD may be obtained from Airbus Industrie, 1 Rond Point Maurice Bellonte, 31707 Blagnac Cedex, France. This information may be examined at the Federal Aviation Administration (FAA), Transport Airplane Directorate, Rules Docket, 1601 Lind Avenue, SW., Renton, Washington; or at the Office of the Federal Register, 800 North Capitol Street, NW., suite 700, Washington, DC.

FOR FURTHER INFORMATION CONTACT: Norman B. Martenson, Manager, International Branch, ANM–116, FAA, Transport Airplane Directorate, 1601 Lind Avenue, SW., Renton, Washington 98055–4056; telephone (425) 227–2110; fax (425) 227–1149.

SUPPLEMENTARY INFORMATION: A proposal to amend part 39 of the Federal Aviation Regulations (14 CFR part 39) by superseding AD 96–11–05, amendment 39–9630 (61 FR 26091, May 24, 1996), which is applicable to certain Airbus Industrie Model A300, A300–600, and A310 series airplanes, was published in the **Federal Register** on February 14, 2000 (65 FR 7316). The action proposed to continue to require inspections to detect cracks in the lower spar axis of the engine pylons for Airbus Model A300 and A300–600 series airplanes, and to require accomplishment of the actions specified in Airbus Service Bulletin A310–54–2017, Revision 03, for Model A310 series airplanes.

Comments Received

Interested persons have been afforded an opportunity to participate in the making of this amendment. Due consideration has been given to the comments received.

No Objection to the Proposal

One commenter, an operator, states that it is not affected by the proposed AD, and therefore has no objection or additional comments.

Reference to French Airworthiness Directive

One commenter, the manufacturer, requests that the proposed AD be revised to include a reference to a related French airworthiness directive. The commenter states that the proposed AD refers to French airworthiness directive 1999–239–287(B), which addresses Airbus Model A310 series airplanes, but does not mention 1993–228–154(B)R3, which addresses Airbus Model A300 and A300–600 series airplanes (actions for those airplanes are required in existing FAA AD 96–11–05).

The FAA acknowledges that the actions required by existing FAA AD 96–11–05 are related to French airworthiness directive 1993–228–154(B). The FAA has no objection to including the reference in this AD, which continues to require those actions for Model A300 and A300–600 series airplanes. ''NOTE 3'' of the AD has been revised accordingly. However, although the FAA generally references the latest pertinent airworthiness directive issued by another airworthiness authority as an informational **Note** in the AD, this information is not intended to be an exhaustive list of all related mandatory continuing airworthiness information, and should not be considered as such.

Conclusion

After careful review of the available data, including the comments noted above, the FAA has determined that air safety and the public interest require the adoption of the rule with the change previously described. The FAA has determined that this change will neither increase the economic burden on any operator nor increase the scope of the AD.

Cost Impact

There are approximately 146 airplanes of U.S. registry that will be affected by this AD.

The requirements of this AD will not add any new additional economic burden on affected operators, other than the costs that are associated with accomplishing inspections for certain airplanes at an earlier time than would have been required by AD 96–11–05. The current costs associated with this AD are reiterated (as follows) for the convenience of affected operators.

The inspections that are currently required by AD 96–11–05, and retained in this AD, take approximately 8 work hours per airplane to accomplish, at an average labor rate of $60 per work hour. Based on these figures, the cost impact of the currently required actions on U.S. operators is estimated to be $480 per airplane, per inspection cycle.

Regulatory Impact

The regulations adopted herein will not have a substantial direct effect on the States, on the relationship between the national Government and the States, or on the distribution of power and responsibilities among the various levels of government. Therefore, it is determined that this final rule does not have federalism implications under Executive Order 13132.

For the reasons discussed above, I certify that this action (1) is not a ''significant regulatory action'' under Executive Order 12866; (2) is not a ''significant rule'' under DOT Regulatory Policies and Procedures (44 FR 11034, February 26, 1979); and (3) will not have a significant economic impact, positive or negative, on a substantial number of small entities under the criteria of the Regulatory Flexibility Act. A final evaluation has been prepared for this action and it is contained in the Rules Docket. A copy of it may be obtained from the Rules Docket at the location provided under the caption **ADDRESSES.**

List of Subjects in 14 CFR Part 39

Air transportation, Aircraft, Aviation safety, Incorporation by reference, Safety.

Adoption of the Amendment

Accordingly, pursuant to the authority delegated to me by the Administrator, the Federal Aviation Administration amends part 39 of the Federal Aviation Regulations (14 CFR part 39) as follows:

PART 39—AIRWORTHINESS DIRECTIVES

1. The authority citation for part 39 continues to read as follows:

Authority: 49 U.S.C. 106(g), 40113, 44701.

§ 39.13 [Amended]

2. Section 39.13 is amended by removing amendment 39–9630 (61 FR 26091, May 24, 1996), and by adding a new airworthiness directive (AD), amendment 39–11742, to read as follows:

2000–10–18 Airbus Industrie: Amendment 39–11742. Docket 99–NM–251-AD. Supersedes AD 96–11–05, Amendment 39–9630.

Applicability: The following models, certificated in any category: Model A300 and A300–600 series airplanes, as listed in Airbus Service Bulletins A300–54–0073 and A300–54–6014, both Revision 1, dated March 28, 1994; and Model A310 series airplanes, except those on which Airbus Modification 10149 has been accomplished.

Note 1: This AD applies to each airplane identified in the preceding applicability provision, regardless of whether it has been otherwise modified, altered, or repaired in the area subject to the requirements of this AD. For airplanes that have been modified, altered, or repaired so that the performance of the requirements of this AD is affected, the owner/operator must request approval for an alternative method of compliance in accordance with paragraph (m)(1) of this AD. The request should include an assessment of the effect of the modification, alteration, or repair on the unsafe condition addressed by this AD; and, if the unsafe condition has not been eliminated, the request should include specific proposed actions to address it.

Compliance: Required as indicated, unless accomplished previously. To prevent fatigue cracking, which could result in reduced structural integrity of the engine pylon's lower spar and possible separation of the engine from the airplane, accomplish the following:

Restatement of Certain Requirements of AD 96–11–05

Eddy Current Inspections

(a) For Model A300 series airplanes equipped with General Electric CF6–50C engines, and having pylons that have not been modified in accordance with Airbus Industrie Service Bulletin A300–54–0080, Revision 1, dated January 16, 1995: Prior to the accumulation of 10,900 total landings, or within 500 landings after June 28, 1996 (the effective date of AD 96–11–05, amendment 39–9630), whichever occurs later, perform an internal eddy current inspection to detect cracks in the lower spar axis of the pylons between ribs 6 and 7, in accordance with Airbus Industrie Service Bulletin A300–54–0073, Revision 1, dated March 28, 1994.

(1) If no crack is found, repeat the inspection thereafter at intervals not to exceed 6,700 landings.

(2) If any crack is found that is less than 35 millimeters (1.38 inches), prior to further flight, stop-drill the crack in accordance with the procedures specified in Section 51–41–10 of the Structural Repair Manual (SRM). Thereafter, prior to the accumulation of 250 landings after crack discovery, repair in accordance with the service bulletin. Prior to the accumulation of 17,900 landings after accomplishing the repair, perform an eddy current inspection to detect cracks at the stiffener ends, ribs 6 and 7, at the edge of the holes made during the repair and on the fasteners located at the edge of the doubler, in accordance with the service bulletin.

(i) If no crack is found, repeat the inspection required by paragraph (a)(2) of this AD thereafter at intervals not to exceed 15,000 landings.

(ii) If any crack is found, prior to further flight, repair in accordance with a method approved by the Manager, International Branch, ANM–116, FAA, Transport Airplane Directorate; or the Direction Generale de l'Aviation Civile (DGAC) (or its delegated agent).

(3) If any crack is found that is greater than or equal to 35 mm (1.38 in.), prior to further flight, repair in accordance with a method approved by the Manager, International Branch, ANM–116; or the DGAC (or its delegated agent).

(b) For Model A300 series airplanes equipped with General Electric CF6–50C engines, and having pylons that have been modified in accordance with Airbus Industrie Service Bulletin A300–54–0080, Revision 1, dated January 16, 1995: Prior to the accumulation of 30,300 landings since installation of the modification, or within 500 landings after June 28, 1996, whichever occurs later, perform an eddy current inspection to detect cracks in the lower spar axis of the pylons between ribs 6 and 7, in accordance with Airbus Industrie Service Bulletin A300–54–0073, Revision 1, dated March 28, 1994.

(1) If no crack is found, repeat the eddy current inspection thereafter at intervals not to exceed 21,300 landings.

(2) If any crack is found, prior to further flight, repair in accordance with a method approved by the Manager, International Branch, ANM–116; or the DGAC (or its delegated agent).

(c) For Model A300 series airplanes equipped with Pratt & Whitney JT9D–59A engines, and having pylons that have not been modified in accordance with Airbus Industrie Service Bulletin A300–54–0080, Revision 1, dated January 16, 1995: Prior to the accumulation of 8,600 total landings, or within 500 landings after June 28, 1996, whichever occurs later, perform an internal eddy current inspection to detect cracks in the lower spar axis of the pylons between ribs 6 and 7, in accordance with Airbus Industrie Service Bulletin A300–54–0073, Revision 1, dated March 28, 1994.

(1) If no crack is found, repeat the inspection thereafter at intervals not to exceed 5,700 landings.

(2) If any crack is found that is less than 35 mm (1.38 in.), prior to further flight, stop-drill the crack in accordance with the procedures specified in Section 51–41–10 of the SRM. Thereafter, prior to the accumulation of 250 landings after crack discovery, repair in accordance with the service bulletin. Prior to the accumulation of 14,200 landings after accomplishing the repair, perform an eddy current inspection to detect cracks at the stiffener ends, ribs 6 and 7, at the edge of the holes made during the repair and on the fasteners located at the edge of the doubler, in accordance with the service bulletin.

(i) If no crack is found, repeat the inspection required by paragraph (c)(2) of this AD thereafter at intervals not to exceed 12,800 landings.

(ii) If any crack is found, prior to further flight, repair in accordance with a method approved by the Manager, International Branch, ANM–116; or by the DGAC (or its delegated agent).

(3) If any crack is found that is greater than or equal to 35 mm (1.38 in.), prior to further flight, repair in accordance with a method approved by the Manager, International Branch, ANM–116; or the DGAC (or its delegated agent).

(d) For Model A300 series airplanes equipped with Pratt & Whitney JT9D–59A engines, and having pylons that have been modified in accordance with Airbus Industrie Service Bulletin A300–54–0080, Revision 1, dated January 16, 1995: Prior to the accumulation of 24,000 landings since installation of the modification, or within 500 landings after June 28, 1996, whichever occurs later, perform an eddy current inspection to detect cracks in the lower spar axis of the pylons between ribs 6 and 7, in accordance with Airbus Industrie Service Bulletin A300–54–0073, Revision 1, dated March 28, 1994.

(1) If no crack is found, repeat the eddy current inspection thereafter at intervals not to exceed 18,200 landings.

(2) If any crack is found, prior to further flight, repair in accordance with a method approved by the Manager, International Branch, ANM–116; or the DGAC (or its delegated agent).

(e) For Model A300–600 series airplanes equipped with General Electric CF6–80C2 engines, and having pylons that have not been modified in accordance with Airbus Industrie Service Bulletin A300–54–6020, dated February 22, 1994: Prior to the accumulation of 9,400 total landings, or within 500 landings after June 28, 1996, whichever occurs later, perform an internal eddy current inspection to detect cracks in the lower spar axis of the pylons between ribs 6 and 7, in accordance with Airbus Industrie Service Bulletin A300–54–6014, Revision 1, dated March 28, 1994.

(1) If no crack is found, repeat the inspection thereafter at intervals not to exceed 6,100 landings.

(2) If any crack is found that is less than or equal to 35 mm (1.38 in.), prior to further flight, stop-drill the crack in accordance with the procedures specified in Section 51–41–10 of the SRM. Thereafter, prior to the accumulation of 250 landings after crack discovery, repair in accordance with the service bulletin. Prior to the accumulation of 15,600 landings after accomplishing the repair, perform an eddy current inspection to detect cracks at the stiffener ends, ribs 6 and 7, at the edge of the holes made during the repair and on the fasteners located at the edge of the doubler, in accordance with the service bulletin.

(i) If no crack is found, repeat the inspection required by paragraph (e)(2) of this AD thereafter at intervals not to exceed 13,600 landings.

(ii) If any crack is found, prior to further flight, repair in accordance with a method approved by the Manager, International Branch, ANM–116; or the DGAC (or its delegated agent).

(3) If any crack is found that is greater than or equal to 35 mm (1.38 in.), prior to further flight, repair in accordance with a method approved by the Manager, International Branch, ANM–116; or the DGAC (or its delegated agent).

(f) For Model A300–600 series airplanes equipped with General Electric CF6–80C2 engines, and having pylons that have been modified in accordance with Airbus Industrie Service Bulletin A300–54–6020, dated February 22, 1994: Prior to the accumulation of 26,400 landings since installation of the modification, or within 500 landings after June 28, 1996, whichever occurs later, perform an eddy current inspection to detect cracks in the lower spar axis of the pylons between ribs 6 and 7, in accordance with Airbus Industrie Service Bulletin A300–54–6014, Revision 1, dated March 28, 1994.

(1) If no crack is found, repeat the eddy current inspection thereafter at intervals not to exceed 19,400 landings.

(2) If any crack is found, prior to further flight, repair in accordance with a method approved by the Manager, International Branch, ANM–116; or the DGAC (or its delegated agent).

(g) For Model A300–600 series airplanes equipped with Pratt & Whitney JT9D–7R4 or PW 4000 engines, and having pylons that have not been modified in accordance with Airbus Industrie Service Bulletin A300–54–6020, dated February 22, 1994: Prior to the accumulation of 5,700 total landings, or within 500 landings after June 28, 1996, whichever occurs later, perform an internal eddy current inspection to detect cracks in the lower spar axis of the pylons between ribs 6 and 7, in accordance with Airbus Industrie Service Bulletin A300–54–6014, Revision 1, dated March 28, 1994.

(1) If no crack is found, repeat the inspection thereafter at intervals not to exceed 4,400 landings.

(2) If any crack is found that is less than 35 mm (1.38 in.), prior to further flight, stop-drill the crack in accordance with the procedures specified in Section 51–41–10 of the SRM. Thereafter, prior to the accumulation of 250 landings after crack discovery, repair in accordance with the service bulletin. Prior to the accumulation of 10,100 landings after accomplishing the repair, perform an eddy current inspection to detect cracks at the stiffener ends, ribs 6 and 7, at the edge of the holes made during the repair and on the fasteners located at the edge of the doubler, in accordance with the service bulletin.

(i) If no crack is found, repeat the inspection required by paragraph (g)(2) of this AD thereafter at intervals not to exceed 10,000 landings.

(ii) If any crack is found, prior to further flight, repair in accordance with a method approved by the Manager, International Branch, ANM–116; or the DGAC (or its delegated agent).

(3) If any crack is found that is greater than or equal to 35 mm (1.38 in.), prior to further flight, repair in accordance with a method approved by the Manager, International Branch, ANM–116; or the DGAC (or its delegated agent).

(h) For Model A300–600 series airplanes equipped with Pratt & Whitney JT9D–7R4 or PW 4000 engines, and having pylons that have been modified in accordance with Airbus Industrie Service Bulletin A300–54–6020, dated February 22, 1994: Prior to the accumulation of 17,000 landings since installation of the modification, or within 500 landings after June 28, 1996, whichever occurs later, perform an eddy current inspection to detect cracks in the lower spar axis of the pylons between ribs 6 and 7, in accordance with Airbus Industrie Service Bulletin A300–54–6014, Revision 1, dated March 28, 1994.

(1) If no crack is found, repeat the eddy current inspection thereafter at intervals not to exceed 14,500 landings.

(2) If any crack is found, prior to further flight, repair in accordance with a method approved by the Manager, International Branch, ANM–116; or the DGAC (or its delegated agent).

New Requirements of This AD

New and Repetitive Inspections for Model A310 Series Airplanes

(i) For Model A310 series airplanes on which the modification specified in Airbus Service Bulletin A310–54–2023, dated October 15, 1993, has not been accomplished: Perform an eddy current inspection to detect cracks in the lower spar axis of the pylons between ribs 6 and 7, in accordance with Airbus Industrie Service Bulletin A310–54–2017, Revision 03, dated June 11, 1999, at the applicable time specified in paragraph (i)(1), (i)(2), or (i)(3) of this AD.

(1) For airplanes that have accumulated fewer than 10,000 total landings as of the effective date of this AD: Inspect prior to the accumulation of 7,000 total landings, or within 1,500 landings after the effective date of this AD, whichever occurs later.

(2) For airplanes that have accumulated 10,000 total landings or more and fewer than 20,000 total landings as of the effective date of this AD: Inspect within 1,000 landings after the effective date of this AD.

(3) For airplanes that have accumulated 20,000 total landings or more as of the effective date of this AD: Inspect within 500 landings after the effective date of this AD.

(j) If no crack is found during the inspection required by paragraph (i) of this AD, accomplish the actions specified by either paragraph (j)(1) or (j)(2) of this AD.

(1) Repeat the inspection thereafter at intervals not to exceed 6,400 landings. Or

(2) Prior to further flight, modify the lower spar between ribs 6 and 7 in accordance with Airbus Industrie Service Bulletin A310–54–2023, dated October 15, 1993, and thereafter accomplish the actions required by paragraph (l) of this AD.

(k) If any crack is found during any inspection required by paragraph (i) or (j) of this AD, accomplish the actions required by paragraph (k)(1) or (k)(2) of this AD, as applicable.

(1) If the crack is less than 35 mm (1.38 in.), prior to further flight, repair in accordance with Airbus Industrie Service Bulletin A310–54–2017, Revision 03, dated June 11, 1999. Thereafter, within 13,600 landings after accomplishing the repair, perform an eddy current inspection to detect cracks at the stiffener ends, ribs 6 and 7, at the edge of the holes made during the repair, and on the fasteners located at the end of the doubler, in accordance with the service bulletin.

(i) If no crack is found during the inspection required by paragraph (k)(1) of this AD, repeat the inspection required by paragraph (i) of this AD thereafter at intervals not to exceed 11,600 landings.

(ii) If any crack is found during the inspection required by paragraph (k)(1) of this AD, prior to further flight, repair in accordance with a method approved by the Manager, International Branch, ANM–116; or the DGAC (or its delegated agent).

(2) If the crack is equal to or greater than 35 mm (1.38 in.), prior to further flight, repair in accordance with a method approved by the Manager, International Branch, ANM–116; or the DGAC (or its delegated agent).

(l) For Model A310 series airplanes on which the modification specified in Airbus Industrie Service Bulletin A310–54–2023, dated October 15, 1993, has been accomplished: Within 23,000 landings after accomplishment of the modification, or within 90 days after the effective date of this AD, whichever occurs later, perform an eddy current inspection to detect cracks in the lower spar axis of the pylons between ribs 6 and 7, in accordance with Airbus Industrie Service Bulletin A310–54–2017, Revision 03, dated June 11, 1999.

(1) If no crack is found, repeat the inspection thereafter at intervals not to exceed 15,500 landings.

(2) If any crack is found during any inspection required by paragraph (l) or (l)(1) of this AD, prior to further flight, repair in accordance with a method approved by the Manager, International Branch, ANM–116; or the DGAC (or its delegated agent).

Alternative Methods of Compliance

(m)(1) An alternative method of compliance or adjustment of the compliance time that provides an acceptable level of safety may be used if approved by the Manager, International Branch, ANM–116. Operators shall submit their requests through an appropriate FAA Principal Maintenance Inspector, who may add comments and then send it to the Manager, International Branch, ANM–116.

(2) Alternate methods of compliance approved previously in accordance with AD 96–11–05, Amendment 39–9630, for paragraphs (a) through (h) of that AD, are approved as alternative methods of compliance with paragraphs (a) through (h) of this AD.

Note 2: Information concerning the existence of approved alternative methods of compliance with this AD, if any, may be obtained from the International Branch, ANM–116.

Special Flight Permits

(n) Special flight permits may be issued in accordance with sections 21.197 and 21.199 of the Federal Aviation Regulations (14 CFR 21.197 and 21.199) to operate the airplane to a location where the requirements of this AD can be accomplished.

Incorporation by Reference

(o) Except as required by paragraphs (a)(2), (a)(2)(ii), (a)(3), (b)(2), (c)(2), (c)(2)(ii), (c)(3), (d)(2), (e)(2), (e)(2)(ii), (e)(3), (f)(2), (g)(2), (g)(2)(ii), (g)(3), (h)(2), (k)(1)(ii), (k)(2), and (l)(2), the actions shall be done in accordance with the following Airbus service bulletins:

Airbus service bulletin No.	Revision level	Service bulletin date
A300–54–0073,	1	March 28, 1994.
A300–54–6014,	1	March 28, 1994.
A310–54–2017,	03	June 11, 1999.
A310–54–2023,	Original	October 15, 1993.

(1) The incorporation by reference of Airbus Service Bulletin A310–54–2017, Revision 03, dated June 11, 1999, is approved by the Director of the Federal Register, in accordance with 5 U.S.C. 552(a) and 1 CFR part 51.

(2) The incorporation by reference of the remaining service bulletins was approved previously by the Director of the Federal Register as of June 28, 1996 (61 FR 26091, May 24, 1996).

(3) Copies may be obtained from Airbus Industrie, 1 Rond Point Maurice Bellonte, 31707 Blagnac Cedex, France. Copies may be inspected at the FAA, Transport Airplane Directorate, 1601 Lind Avenue, SW., Renton, Washington; or at the Office of the Federal Register, 800 North Capitol Street, NW., suite 700, Washington, DC.

Note 3: The subject of this AD is addressed in French airworthiness directives 1999–239–287(B) and 1993–228–154(B)R3, both dated June 2, 1999.

(p) This amendment becomes effective on June 30, 2000.

Issued in Renton, Washington, on May 16, 2000.

Donald L. Riggin,

Acting Manager, Transport Airplane Directorate, Aircraft Certification Service.

[FR Doc. 00–12814 Filed 5–25–00; 8:45 am]

BILLING CODE 4910–13–U

DEPARTMENT OF TRANSPORTATION

Federal Aviation Administration

14 CFR Part 39

[Docket No. 99–NM–28–AD; Amendment 39–11740; AD 2000–10–16]

RIN 2120–AA64

Airworthiness Directives; Airbus Model A319, A320, and A321 Series Airplanes

AGENCY: Federal Aviation Administration, DOT.

ACTION: Final rule.

SUMMARY: This amendment supersedes an existing airworthiness directive (AD), applicable to certain Airbus Model A319, A320, and A321 series airplanes, that currently requires repetitive inspections for discrepancies of the lock bolt for the pintle pin on the main landing gear (MLG), and follow-on corrective actions, if necessary. This amendment requires additional follow-on actions for certain airplanes. This amendment also provides for optional terminating action for the requirements of this AD. This amendment is prompted by issuance of mandatory continuing airworthiness information by a foreign civil airworthiness authority. The actions specified by this AD are intended to detect and correct a rotated, damaged, or missing lock bolt, which could result in disengagement of the pintle pin from the pintle fitting bearing, and consequent collapse of the MLG during landing.

DATES: Effective June 30, 2000.

The incorporation by reference of certain publications listed in the regulations is approved by the Director of the Federal Register as of June 30, 2000.

The incorporation by reference of certain other publications, as listed in the regulations, was approved previously by the Director of the Federal Register as of August 12, 1998 (63 FR 36834, July 8, 1998).

ADDRESSES: The service information referenced in this AD may be obtained from Airbus Industrie, 1 Rond Point Maurice Bellonte, 31707 Blagnac Cedex, France. This information may be examined at the Federal Aviation Administration (FAA), Transport Airplane Directorate, Rules Docket, 1601 Lind Avenue, SW., Renton, Washington; or at the Office of the Federal Register, 800 North Capitol Street, NW., suite 700, Washington, DC.

FOR FURTHER INFORMATION CONTACT: Norman B. Martenson, Manager, International Branch, ANM–116, FAA, Transport Airplane Directorate, 1601 Lind Avenue, SW., Renton, Washington 98055–4056; telephone (425) 227–2110; fax (425) 227–1149.

SUPPLEMENTARY INFORMATION: A proposal to amend part 39 of the Federal Aviation Regulations (14 CFR part 39) by superseding AD 98–14–11, amendment 39–10644 (63 FR 36834, July 8, 1998), which is applicable to all Airbus Model A319, A320, and A321 series airplanes, was published in the **Federal Register** on February 24, 2000 (65 FR 9225). The action proposed to continue to require repetitive inspections for discrepancies of the lock bolt for the pintle pin on the main landing gear (MLG), and follow-on corrective actions, if necessary; and to require additional follow-on actions, including a retorque of the lock bolt for the pintle pin.

Comment Received

Interested persons have been afforded an opportunity to participate in the making of this amendment. Due consideration has been given to the comment received.

Reference to Terminating Modification

Two commenters request that the proposed AD include reference to Airbus Modifications 28903 (for Model A319 and A320 series airplanes) and 30044 (for Model A321 series airplanes) as terminating action to the requirements of this AD. Airbus Service Bulletin A320–32–1213, dated March 21, 2000, describes procedures for accomplishment of the modification, which involves installation of a dual lock bolt configuration. One commenter notes that the Direction Generale de l'Aviation Civile (DGAC), which is the airworthiness authority of France, has approved this modification as terminating action for the inspections and actions described in Airbus Service Bulletin A320–32–1187.

The FAA concurs that the modification described in Airbus Service Bulletin A320–32–1213 constitutes acceptable terminating action to the requirements of this AD. A new paragraph (c) has been added to the AD to provide this option to operators, and the applicability of the AD has been limited to those airplanes not having the modification. Additionally, since terminating action is now available, the FAA has removed the ''Interim Action'' discussion from the AD; however, the FAA may consider further rulemaking if

a determination is made at a later date that the terminating modification should be mandated.

Conclusion

After careful review of the available data, including the comment noted above, the FAA has determined that air safety and the public interest require the adoption of the rule with the changes previously described. The FAA has determined that these changes will neither increase the economic burden on any operator nor increase the scope of the AD.

Cost Impact

There are approximately 341 airplanes of U.S. registry that will be affected by this AD. It will take approximately 2 work hours to accomplish the required inspection, at an average labor rate of $60 per work hour. Based on these figures, the cost impact of the inspection required by this AD on U.S. operators is estimated to be $40,920, or $120 per airplane, per inspection cycle.

The cost impact figure discussed above is based on assumptions that no operator has yet accomplished any of the requirements of this AD action, and that no operator would accomplish those actions in the future if this AD were not adopted.

Regulatory Impact

The regulations adopted herein will not have a substantial direct effect on the States, on the relationship between the national Government and the States, or on the distribution of power and responsibilities among the various levels of government. Therefore, it is determined that this final rule does not have federalism implications under Executive Order 13132.

For the reasons discussed above, I certify that this action (1) is not a ''significant regulatory action'' under Executive Order 12866; (2) is not a ''significant rule'' under DOT Regulatory Policies and Procedures (44 FR 11034, February 26, 1979); and (3) will not have a significant economic impact, positive or negative, on a substantial number of small entities under the criteria of the Regulatory Flexibility Act. A final evaluation has been prepared for this action and it is contained in the Rules Docket. A copy of it may be obtained from the Rules Docket at the location provided under the caption **ADDRESSES**.

List of Subjects in 14 CFR Part 39

Air transportation, Aircraft, Aviation safety, Incorporation by reference, Safety.

Adoption of the Amendment

Accordingly, pursuant to the authority delegated to me by the Administrator, the Federal Aviation Administration amends part 39 of the Federal Aviation Regulations (14 CFR part 39) as follows:

PART 39—AIRWORTHINESS DIRECTIVES

1. The authority citation for part 39 continues to read as follows:

Authority: 49 U.S.C. 106(g), 40113, 44701.

§ 39.13 [Amended]

2. Section 39.13 is amended by removing amendment 39–10644 (63 FR 36834, July 8, 1998), and by adding a new airworthiness directive (AD), amendment 39–11740, to read as follows:

2000–10–16 Airbus Industrie: Amendment 39–11740. Docket 99–NM–28–AD. Supersedes AD 98–14–11, Amendment 39–10644.

Applicability: Model A319, A320, and A321 series airplanes, certificated in any category, except those on which Airbus Service Bulletin A320–32–1213, dated March 21, 2000 (reference Airbus Modification 28903 or 30044), has been accomplished.

Note 1: This AD applies to each airplane identified in the preceding applicability provision, regardless of whether it has been otherwise modified, altered, or repaired in the area subject to the requirements of this AD. For airplanes that have been modified, altered, or repaired so that the performance of the requirements of this AD is affected, the owner/operator must request approval for an alternative method of compliance in accordance with paragraph (d) of this AD. The request should include an assessment of the effect of the modification, alteration, or repair on the unsafe condition addressed by this AD; and, if the unsafe condition has not been eliminated, the request should include specific proposed actions to address it.

Compliance: Required as indicated, unless accomplished previously.

To detect and correct a rotated, damaged, or missing lock bolt, which could result in disengagement of the pintle pin from the bearing, and consequent collapse of the main landing gear (MLG) during landing, accomplish the following:

Inspection

(a) Perform a detailed visual inspection to detect discrepancies (rotation, damage, and absence) of the lock bolt for the pintle pin on the MLG, in accordance with Airbus All Operator Telex (AOT) 32–17, Revision 01, dated November 6, 1997, Airbus Service Bulletin A320–32–1187, dated June 17, 1998, or Airbus Service Bulletin A320–32–1187, Revision 01, dated February 17, 1999, at the latest of the times specified in paragraphs (a)(1), (a)(2), and (a)(3) of this AD. If any discrepancy is detected, prior to further flight, perform corrective actions, as applicable, in accordance with the AOT or service bulletin. Repeat the inspection thereafter at intervals not to exceed 1,000 flight cycles or 15 months, whichever occurs first, unless the terminating action of paragraph (c) of this AD is accomplished. After the effective date of this AD, only Airbus Service Bulletin A320–32–1187, Revision 01, dated February 17, 1999, shall be used for compliance with this paragraph.

(1) Within 30 months since the airplane's date of manufacture or prior to the accumulation of 2,000 total flight cycles, whichever occurs first.

(2) Within 15 months or 1,000 flight cycles after the last gear replacement or accomplishment of Airbus Industrie Service Bulletin A320–32–1119, dated June 13, 1994, whichever occurs first.

(3) Within 500 flight cycles after August 12, 1998 (the effective date of AD 98–14–11, amendment 39–10644).

Note 2: For the purposes of this AD, a detailed visual inspection is defined as: ''An intensive visual examination of a specific structural area, system, installation, or assembly to detect damage, failure, or irregularity. Available lighting is normally supplemented with a direct source of good lighting at intensity deemed appropriate by the inspector. Inspection aids such as mirror, magnifying lenses, etc., may be used. Surface cleaning and elaborate access procedures may be required.''

One-Time Follow-On Actions

(b) For airplanes on which the actions described in paragraph 2.B.(2)(c) of Airbus Service Bulletin A320–32–1187, Revision 01, dated February 17, 1999, have not been accomplished: At the time of the initial inspection or the next repetitive inspection required by paragraph (a) of this AD, perform the applicable one-time follow-on actions (including retorquing the forward pintle pin lock bolt and applying sealant to the head of the lock bolt), in accordance with section 2.B.(2)(c) of the Accomplishment Instructions of Airbus Service Bulletin A320–32–1187, Revision 01, dated February 17, 1999.

Optional Terminating Modification

(c) Modification of the lock bolts of the bolt for the pintle pin on the MLG in accordance with Airbus Service Bulletin A320–32–1213, dated March 21, 2000, constitutes terminating action for the requirements of this AD.

Alternative Methods of Compliance

(d) An alternative method of compliance or adjustment of the compliance time that provides an acceptable level of safety may be used if approved by the Manager, International Branch, ANM–116, FAA, Transport Airplane Directorate. Operators shall submit their request through an appropriate FAA Principal Maintenance Inspector, who may add comments and then send it to the Manager, International Branch, ANM–116.

Note 3: Information concerning the existence of approved alternative methods of compliance with this AD, if any, may be obtained from the International Branch, ANM–116.

Special Flight Permits

(e) Special flight permits may be issued in accordance with sections 21.197 and 21.199 of the Federal Aviation Regulations (14 CFR 21.197 and 21.199) to operate the airplane to a location where the requirements of this AD can be accomplished.

Incorporation by Reference

(f) The actions shall be done in accordance with Airbus All Operator Telex (AOT) 32–17, Revision 01, dated November 6, 1997; Airbus Service Bulletin A320–32–1187, dated June 17, 1998; or Airbus Service Bulletin A320–32–1187, Revision 01, dated February 17, 1999.

(1) The incorporation by reference of Airbus Service Bulletin A320–32–1187, dated June 17, 1998, and Airbus Service Bulletin A320–32–1187, Revision 01, dated February 17, 1999, is approved by the Director of the Federal Register in accordance with 5 U.S.C. 552(a) and 1 CFR part 51.

(2) The incorporation by reference of Airbus All Operator Telex (AOT) 32–17, Revision 01, dated November 6, 1997, was approved previously by the Director of the Federal Register as of August 12, 1998 (63 FR 36834, July 8, 1998).

(3) Copies may be obtained from Airbus Industrie, 1 Rond Point Maurice Bellonte, 31707 Blagnac Cedex, France. Copies may be inspected at the FAA, Transport Airplane Directorate, 1601 Lind Avenue, SW., Renton, Washington; or at the Office of the Federal Register, 800 North Capitol Street, NW., suite 700, Washington, DC.

Note 4: The subject of this AD is addressed in French airworthiness directive 97–385–112(B)R1, dated October 21, 1998.

(g) This amendment becomes effective on June 30, 2000.

Issued in Renton, Washington, on May 16, 2000.

Donald L. Riggin,

Acting Manager, Transport Airplane Directorate, Aircraft Certification Service.

[FR Doc. 00–12815 Filed 5–25–00; 8:45 am]

BILLING CODE 4910–13–U

DEPARTMENT OF TRANSPORTATION

Federal Aviation Administration

14 CFR Part 39

[Docket No. 97–NM–88–AD; Amendment 39–11748; AD 2000–10–23]

RIN 2120–AA64

Airworthiness Directives; Boeing Model 747–100, –200, –300, 747SR, and 747SP Series Airplanes

AGENCY: Federal Aviation Administration, DOT.

ACTION: Final rule.

SUMMARY: This amendment supersedes an existing airworthiness directive (AD), applicable to certain Boeing Model 747–100, –200, –300, 747SR, and 747SP series airplanes, that currently requires a one-time inspection to detect cracking of the longeron splice fittings at stringer 11, on the left and right sides at body station 2598, and replacement of any cracked fitting with a new fitting. This amendment reduces the compliance time for accomplishment of the currently required inspection and adds a new requirement for repetitive inspections. This amendment is prompted by reports that fatigue cracking was found on longeron splice fittings. The actions specified by this AD are intended to detect and correct such fatigue cracking, which could result in reduced controllability of the horizontal stabilizer.

DATES: Effective June 30, 2000.

The incorporation by reference of Boeing Alert Service Bulletin 747–53A2410, Revision 2, including Addendum, dated October 30, 1997, as listed in the regulations, is approved by the Director of the Federal Register as of June 30, 2000.

The incorporation by reference of Boeing Service Bulletin 747–53A2410, Revision 3, including Addendum, dated March 12, 1998, as listed in the regulations, was approved previously by the Director of the Federal Register as of January 13, 1998 (62 FR 67550, December 29 1997).

ADDRESSES: The service information referenced in this AD may be obtained from Boeing Commercial Airplane Group, P.O. Box 3707, Seattle, Washington 98124–2207. This information may be examined at the Federal Aviation Administration (FAA), Transport Airplane Directorate, Rules Docket, 1601 Lind Avenue, SW., Renton, Washington; or at the Office of the Federal Register, 800 North Capitol Street, NW., suite 700, Washington, DC.

FOR FURTHER INFORMATION CONTACT: Rick Kawaguchi, Aerospace Engineer, Airframe Branch, ANM–120S, FAA, Transport Airplane Directorate, Seattle Aircraft Certification Office, 1601 Lind Avenue, SW., Renton, Washington 98055–4056; telephone (425) 227–1153; fax (425) 227–1181.

SUPPLEMENTARY INFORMATION: A proposal to amend part 39 of the Federal Aviation Regulations (14 CFR part 39) by superseding AD 97–26–21, amendment 39–10264 (62 FR 67550, December 29 1997), which is applicable to certain Boeing Model 747–100, –200, –300, 747SR, and 747SP series airplanes, was published in the **Federal Register** on February 22, 2000 (65 FR 8667). The action proposed to continue to require a one-time inspection to detect cracking of the longeron splice fittings at stringer 11, on the left and right sides at body station 2598, and replacement of any cracked fitting with a new fitting. The action also proposed to reduce the compliance time for accomplishment of the currently required inspection and add a new requirement for repetitive inspections.

Comments

Interested persons have been afforded an opportunity to participate in the making of this amendment. No comments were submitted in response to the proposal or the FAA's determination of the cost to the public.

Conclusion

The FAA has determined that air safety and the public interest require the adoption of the rule as proposed.

Cost Impact

There are approximately 685 airplanes of the affected design in the worldwide fleet. The FAA estimates that 99 airplanes of U.S. registry will be affected by this AD.

The inspection that is currently required by AD 97–26–21 takes approximately 32 work hours per airplane to accomplish, at an average labor rate of $60 per work hour.

Based on these figures, the cost impact of the currently required actions on U.S. operators is estimated to be $190,080, or $1,920 per airplane.

This AD requires the same inspection currently required by AD 97–26–21 to be accomplished repetitively. Therefore, the cost impact of the requirements of this AD on U.S. operators is estimated to be $190,080, or $1,920 per airplane, per inspection cycle.

The cost impact figures discussed above are based on assumptions that no operator has yet accomplished any of the requirements of this AD action, and that no operator would accomplish those actions in the future if this AD were not adopted.

Regulatory Impact

The regulations adopted herein will not have a substantial direct effect on the States, on the relationship between the national Government and the States, or on the distribution of power and responsibilities among the various levels of government.

Therefore, it is determined that this final rule does not have federalism implications under Executive Order 13132.

For the reasons discussed above, I certify that this action (1) is not a ''significant regulatory action'' under Executive Order 12866; (2) is not a ''significant rule'' under DOT

Regulatory Policies and Procedures (44 FR 11034, February 26, 1979); and (3) will not have a significant economic impact, positive or negative, on a substantial number of small entities under the criteria of the Regulatory Flexibility Act. A final evaluation has been prepared for this action and it is contained in the Rules Docket. A copy of it may be obtained from the Rules Docket at the location provided under the caption **ADDRESSES.**

List of Subjects in 14 CFR Part 39

Air transportation, Aircraft, Aviation safety, Incorporation by reference, Safety.

Adoption of the Amendment

Accordingly, pursuant to the authority delegated to me by the Administrator, the Federal Aviation Administration amends part 39 of the Federal Aviation Regulations (14 CFR part 39) as follows:

PART 39—AIRWORTHINESS DIRECTIVES

1. The authority citation for part 39 continues to read as follows:

Authority: 49 U.S.C. 106(g), 40113, 44701.

§ 39.13 [Amended]

2. Section 39.13 is amended by removing amendment 39–10264 (62 FR 67550, December 29 1997), and by adding a new airworthiness directive (AD), amendment 39–11748, to read as follows:

2000–10–23 Boeing: Amendment 39–11748. Docket 97-NM–88-AD. Supersedes AD 97–26–21, Amendment 39–10264.

Applicability: Model 747–100, 747–200, 747–300, 747SR, and 747SP series airplanes; having line positions 201 through 886 inclusive; certificated in any category.

Note 1: This AD applies to each airplane identified in the preceding applicability provision, regardless of whether it has been modified, altered, or repaired in the area subject to the requirements of this AD. For airplanes that have been modified, altered, or repaired so that the performance of the requirements of this AD is affected, the owner/operator must request approval for an alternative method of compliance in accordance with paragraph (d) of this AD. The request should include an assessment of the effect of the modification, alteration, or repair on the unsafe condition addressed by this AD; and, if the unsafe condition has not been eliminated, the request should include specific proposed actions to address it.

Compliance: Required as indicated, unless accomplished previously.

To detect and correct fatigue cracking of the longeron splice fittings at stringer 11, which could result in reduced controllability of the horizontal stabilizer, accomplish the following:

Initial Inspection

(a) Perform a one-time detailed visual inspection to detect cracking of the longeron fittings at stringer 11, on the left and right sides at body station 2598, at the time specified in paragraph (a)(1) or (a)(2) of this AD, as applicable, in accordance with the Accomplishment Instructions of Boeing Alert Service Bulletin 747–53A2410, Revision 2, dated October 30, 1997, including Addendum; or Boeing Service Bulletin 747–53A2410, Revision 3, dated March 12, 1998, including Addendum. After the effective date of this AD, only Revision 3 shall be used.

(1) For airplanes that have accumulated fewer than 17,000 total flight cycles or 63,000 total flight hours as of the effective date of this AD: Inspect at the later of the times specified in paragraph (a)(1)(i) or (a)(1)(ii) of this AD.

(i) Prior to the accumulation of 17,000 total flight cycles or 63,000 total flight hours, whichever occurs first.

(ii) Within 1,800 flight cycles or 7,000 flight hours after the effective date of this AD, whichever occurs first.

(2) For airplanes that have accumulated 17,000 total flight cycles or more, or 63,000 total flight hours or more, as of the effective date of this AD: Inspect at the earlier of the times specified in paragraphs (a)(2)(i) and (a)(2)(ii) of this AD.

(i) Prior to the accumulation of 22,000 total flight cycles or 78,000 total flight hours, whichever occurs first.

(ii) Within 1,800 flight cycles or 7,000 flight hours after the effective date of this AD, whichever occurs first.

Note 2: Where there are differences between the AD and the service bulletin, the AD prevails.

Note 3: For the purposes of this AD, a detailed visual inspection is defined as: ''An intensive visual examination of a specific structural area, system, installation, or assembly to detect damage, failure, or irregularity. Available lighting is normally supplemented with a direct source of good lighting at intensity deemed appropriate by the inspector. Inspection aids such as mirror, magnifying lenses, etc., may be used. Surface cleaning and elaborate access procedures may be required.''

Repetitive Inspections

(b) If no crack is found during the inspection required by paragraph (a) of this AD, repeat the inspection one time at the later of the times specified in paragraphs (b)(1) and (b)(2) of this AD, and thereafter at intervals not to exceed 3,000 flight cycles or 18,000 flight hours, whichever occurs first.

(1) Within 3,000 flight cycles or 18,000 flight hours after accomplishment of the most recent inspection, whichever occurs first.

(2) Within 1,800 flight cycles or 7,000 flight hours after the effective date of this AD, whichever occurs first.

Replacement and Repetitive Inspections

(c) If any crack is found during any inspection required by paragraph (a) or (b) of this AD: Prior to further flight, replace the cracked fitting with a new fitting, in accordance with the Accomplishment Instructions of Boeing Alert Service Bulletin 747–53A2410, Revision 2, dated October 30, 1997, including Addendum; or Boeing Service Bulletin 747–53A2410, Revision 3, dated March 12, 1998, including Addendum. After the effective date of this AD, only Revision 3 shall be used. Then, repeat the inspection specified in paragraph (a) of this AD at the later of the times specified in paragraphs (c)(1) and (c)(2) of this AD, and thereafter at intervals not to exceed 3,000 flight cycles or 18,000 flight hours, whichever occurs first.

(1) Within 17,000 flight cycles or 63,000 flight hours after replacement, whichever occurs first.

(2) Within 1,800 flight cycles or 7,000 flight hours after the effective date of this AD, whichever occurs first.

Alternative Methods of Compliance

(d) An alternative method of compliance or adjustment of the compliance time that provides an acceptable level of safety may be used if approved by the Manager, Seattle Aircraft Certification Office (ACO), FAA, Transport Airplane Directorate. Operators shall submit their requests through an appropriate FAA Principal Maintenance Inspector, who may add comments and then send it to the Manager, Seattle ACO.

Note 4: Information concerning the existence of approved alternative methods of compliance with this AD, if any, may be obtained from the Seattle ACO.

Special Flight Permits

(e) Special flight permits may be issued in accordance with sections 21.197 and 21.199 of the Federal Aviation Regulations (14 CFR 21.197 and 21.199) to operate the airplane to a location where the requirements of this AD can be accomplished.

Incorporation by Reference

(f) The actions shall be done in accordance with Boeing Alert Service Bulletin 747–53A2410, Revision 2, including Addendum, dated October 30, 1997; or Boeing Service Bulletin 747– 53A2410, Revision 3, including Addendum, dated March 12, 1998.

(1) The incorporation by reference of Boeing Service Bulletin 747–53A2410, Revision 3, including Addendum, dated March 12, 1998, is approved by the Director of the Federal Register in accordance with 5 U.S.C. 552(a) and 1 CFR part 51.

(2) The incorporation by reference of Boeing Alert Service Bulletin 747–53A2410, Revision 2, including Addendum, dated October 30, 1997, was approved previously by the Director of the Federal Register as of January 13, 1998 (62 FR 67550, December 29 1997).

(3) Copies may be obtained from Boeing Commercial Airplane Group, P.O. Box 3707, Seattle, Washington 98124–2207. Copies may be inspected at the FAA, Transport Airplane Directorate, 1601 Lind Avenue, SW., Renton, Washington; or at the Office of the Federal Register, 800 North Capitol Street, NW., suite 700, Washington, DC.

(g) This amendment becomes effective on June 30, 2000.

Issued in Renton, Washington, on May 18, 2000.

Donald L. Riggin,

Acting Manager, Transport Airplane Directorate, Aircraft Certification Service.

[FR Doc. 00–13086 Filed 5–25–00; 8:45 am]

BILLING CODE 4910–13–U

DEPARTMENT OF TRANSPORTATION

Federal Aviation Administration

14 CFR Part 39

[Docket No. 2000–NM–111–AD; Amendment 39–11745; AD 2000–10–21]

RIN 2120–AA64

Airworthiness Directives; Boeing Model 737 Series Airplanes

AGENCY: Federal Aviation Administration, DOT.

ACTION: Final rule; request for comments.

SUMMARY: This amendment adopts a new airworthiness directive (AD) that is applicable to certain Boeing Model 737 series airplanes. This action requires a one-time general visual inspection of the seat locks and seat tracks of the flightcrew seats to ensure that the seats lock in position and to verify that lock nuts and bolts of adequate length are installed on the rear tracklock bracket, and corrective action, if necessary. This action is necessary to prevent uncommanded movement of the flightcrew seats during acceleration and take-off of the airplane, which could result in reduced controllability of the airplane. This action is intended to address the identified unsafe condition.

DATES: Effective June 12, 2000.

The incorporation by reference of certain publications listed in the regulations is approved by the Director of the Federal Register as of June 12, 2000.

Comments for inclusion in the Rules Docket must be received on or before July 25, 2000.

ADDRESSES: Submit comments in triplicate to the Federal Aviation Administration (FAA), Transport Airplane Directorate, ANM–114, Attention: Rules Docket No. 2000–NM–111–AD, 1601 Lind Avenue, SW., Renton, Washington 98055–4056. Comments may be inspected at this location between 9 a.m. and 3 p.m., Monday through Friday, except Federal holidays. Comments may be submitted via fax to (425) 227–1232. Comments may also be sent via the Internet using the following address: 9–anm–iarcomment@faa.gov. Comments sent via fax or the Internet must contain ''Docket No. 2000–NM–111–AD'' in the subject line and need not be submitted in triplicate.

The service information referenced in this AD may be obtained from Boeing Commercial Airplane Group, P.O. Box 3707, Seattle, Washington 98124–2207. This information may be examined at the FAA, Transport Airplane Directorate, 1601 Lind Avenue, SW., Renton, Washington; or at the Office of the Federal Register, 800 North Capitol Street, NW., suite 700, Washington, DC.

FOR FURTHER INFORMATION CONTACT: Keith Ladderud, Aerospace Engineer, Airframe Branch, ANM–120S, FAA, Seattle Aircraft Certification Office, 1601 Lind Avenue, SW., Renton, Washington; telephone (425) 227–2780; fax (425) 227–1181.

SUPPLEMENTARY INFORMATION: The FAA has received reports indicating instances of the pilot seat sliding to the aft-most position during acceleration and take-off on certain Boeing Model 737 series airplanes. Investigation revealed that the screws attaching the rear tracklock bracket to the seat track had broken, allowing excessive lateral movement and disengagement of the locking pin from the floor-mounted seat track. A disengaged locking pin can cause misalignment of the seat tracks. Such misalignment of the seat tracks, if not corrected, could result in uncommanded movement of the flightcrew seats during acceleration and take-off of the airplane, which could result in reduced controllability of the airplane.

Explanation of Relevant Service Information

The FAA has reviewed and approved Boeing Alert Service Bulletin 737–25A1363, dated November 5, 1998, which describes procedures for a one-time general visual inspection of the seat locks and seat tracks of the flightcrew seats to ensure that the seats lock in position and to verify that lock nuts and bolts of adequate length are installed on the rear tracklock bracket. If lock nuts and bolts of adequate length are not installed on the rear tracklock bracket, the service bulletin describes installation of lock nuts and bolts of adequate length on the tracklock bracket, and re-alignment of the seat tracks. Accomplishment of the actions specified in the alert service bulletin is intended to adequately address the identified unsafe condition.

Explanation of the Requirements of the Rule

Since an unsafe condition has been identified that is likely to exist or develop on other Boeing Model 737 series airplanes of the same type design, this AD is being issued to prevent uncommanded movement of the flightcrew seats during acceleration and take-off of the airplane, and consequent reduced controllability of the airplane. This AD requires a one-time general visual inspection of the seat locks and seat tracks of the flightcrew seats to ensure that the seats lock in position and to verify that lock nuts and bolts of adequate length are installed on the rear tracklock bracket, and corrective action, if necessary. The actions are required to be accomplished in accordance with the alert service bulletin described previously, except as discussed below.

Difference Between Alert Service Bulletin and This AD

Operators should note that, although the alert service bulletin recommends accomplishment of the actions as soon as manpower and materials are available, the FAA has determined that a 90-day compliance time would address the identified unsafe condition in a timely manner. In developing an appropriate compliance time for this AD, the FAA considered not only the manufacturer's recommendation, but the degree of urgency associated with addressing the subject unsafe condition, the average utilization of the affected fleet, and the time necessary to perform the actions. In light of all of these factors, the FAA finds a 90-day compliance time for completion of the actions to be warranted, in that it represents an appropriate interval of time allowable for affected airplanes to continue to operate without compromising safety.

Determination of Rule's Effective Date

Since a situation exists that requires the immediate adoption of this regulation, it is found that notice and opportunity for prior public comment hereon are impracticable, and that good cause exists for making this amendment effective in less than 30 days.

Comments Invited

Although this action is in the form of a final rule that involves requirements affecting flight safety and, thus, was not preceded by notice and an opportunity for public comment, comments are invited on this rule. Interested persons are invited to comment on this rule by submitting such written data, views, or arguments as they may desire.

Communications shall identify the Rules Docket number and be submitted in triplicate to the address specified under the caption **ADDRESSES.** All communications received on or before

the closing date for comments will be considered, and this rule may be amended in light of the comments received. Factual information that supports the commenter's ideas and suggestions is extremely helpful in evaluating the effectiveness of the AD action and determining whether additional rulemaking action would be needed.

Submit comments using the following format:

- Organize comments issue-by-issue. For example, discuss a request to change the compliance time and a request to change the service bulletin reference as two separate issues.
- For each issue, state what specific change to the AD is being requested.
- Include justification (*e.g.*, reasons or data) for each request.

Comments are specifically invited on the overall regulatory, economic, environmental, and energy aspects of the rule that might suggest a need to modify the rule. All comments submitted will be available, both before and after the closing date for comments, in the Rules Docket for examination by interested persons. A report that summarizes each FAA-public contact concerned with the substance of this AD will be filed in the Rules Docket.

Commenters wishing the FAA to acknowledge receipt of their comments submitted in response to this rule must submit a self-addressed, stamped postcard on which the following statement is made: ''Comments to Docket Number 2000–NM–111–AD.'' The postcard will be date stamped and returned to the commenter.

Regulatory Impact

The regulations adopted herein will not have a substantial direct effect on the States, on the relationship between the national Government and the States, or on the distribution of power and responsibilities among the various levels of government. Therefore, it is determined that this final rule does not have federalism implications under Executive Order 13132.

The FAA has determined that this regulation is an emergency regulation that must be issued immediately to correct an unsafe condition in aircraft, and that it is not a ''significant regulatory action'' under Executive Order 12866. It has been determined further that this action involves an emergency regulation under DOT Regulatory Policies and Procedures (44 FR 11034, February 26, 1979). If it is determined that this emergency regulation otherwise would be significant under DOT Regulatory Policies and Procedures, a final regulatory evaluation will be prepared and placed in the Rules Docket. A copy of it, if filed, may be obtained from the Rules Docket at the location provided under the caption **ADDRESSES.**

List of Subjects in 14 CFR Part 39

Air transportation, Aircraft, Aviation safety, Incorporation by reference, Safety.

Adoption of the Amendment

Accordingly, pursuant to the authority delegated to me by the Administrator, the Federal Aviation Administration amends part 39 of the Federal Aviation Regulations (14 CFR part 39) as follows:

PART 39—AIRWORTHINESS DIRECTIVES

1. The authority citation for part 39 continues to read as follows:

Authority: 49 U.S.C. 106(g), 40113, 44701.

§ 39.13 [Amended]

2. Section 39.13 is amended by adding the following new airworthiness directive:

2000–10–21 BOEING: Amendment 39–11745. Docket 2000–NM–111—AD.

Applicability: Model 737–300, –400, and –500 series airplanes equipped with IPECO flightcrew seats; as listed in Boeing Alert Service Bulletin 737–25A1363, dated November 5, 1998; certificated in any category.

Note 1: This AD applies to each airplane identified in the preceding applicability provision, regardless of whether it has been modified, altered, or repaired in the area subject to the requirements of this AD. For airplanes that have been modified, altered, or repaired so that the performance of the requirements of this AD is affected, the owner/operator must request approval for an alternative method of compliance in accordance with paragraph (b) of this AD. The request should include an assessment of the effect of the modification, alteration, or repair on the unsafe condition addressed by this AD; and, if the unsafe condition has not been eliminated, the request should include specific proposed actions to address it.

Compliance: Required as indicated, unless accomplished previously.

To prevent uncommanded movement of the flightcrew seats during acceleration and take-off of the airplane, accomplish the following:

One-Time Inspection

(a) Within 90 days after the effective date of this AD, perform a one-time general visual inspection of the seat locks and seat tracks of the flightcrew seats to ensure that the seats lock in position and to verify that lock nuts and bolts of adequate length are installed on the rear tracklock bracket, in accordance with Boeing Alert Service Bulletin 737–25A1363, dated November 5, 1998.

(1) If the seat lock pin fully engages in all lock positions of the seat track, and the rear tracklock bracket is correctly installed, no further action is required by this AD.

General Visual Inspection

Note 2: For the purposes of this AD, a general visual inspection is defined as: ''A visual examination of an interior or exterior area, installation, or assembly to detect obvious damage, failure, or irregularity. This level of inspection is made under normally available lighting conditions such as daylight, hangar lighting, flashlight, or drop-light and may require removal or opening of access panels or doors. Stands, ladders, or platforms may be required to gain proximity to the area being checked.''

Corrective Action

(2) If the seat lock pin does not fully engage in all positions of the seat track, and lock nuts and bolts of adequate length are not installed on the rear tracklock bracket, prior to further flight, install lock nuts and bolts of adequate length on the tracklock bracket and re-align the seat tracks, in accordance with the alert service bulletin.

Alternative Methods of Compliance

(b) An alternative method of compliance or adjustment of the compliance time that provides an acceptable level of safety may be used if approved by the Manager, Seattle Aircraft Certification Office (ACO), FAA, Transport Airplane Directorate. Operators shall submit their requests through an appropriate FAA Principal Maintenance Inspector, who may add comments and then send it to the Manager, Seattle ACO.

Note 3: Information concerning the existence of approved alternative methods of compliance with this AD, if any, may be obtained from the Seattle ACO.

Special Flight Permits

(c) Special flight permits may be issued in accordance with sections 21.197 and 21.199 of the Federal Aviation Regulations (14 CFR 21.197 and 21.199) to operate the airplane to a location where the requirements of this AD can be accomplished.

Incorporation by Reference

(d) The actions shall be done in accordance with Boeing Alert Service Bulletin 737–25A1363, dated November 5, 1998. This incorporation by reference was approved by the Director of the Federal Register in accordance with 5 U.S.C. 552(a) and 1 CFR part 51. Copies may be obtained from Boeing Commercial Airplane Group, P.O. Box

3707, Seattle, Washington 98124–2207. Copies may be inspected at the FAA, Transport Airplane Directorate, 1601 Lind Avenue, SW., Renton, Washington; or at the Office of the Federal Register, 800 North Capitol Street, NW., suite 700, Washington, DC.

(e) This amendment becomes effective on June 12, 2000.

Issued in Renton, Washington, on May 18, 2000.

Donald L. Riggin,

Acting Manager, Transport Airplane Directorate, Aircraft Certification Service.

[FR Doc. 00–13085 Filed 5–25–00; 8:45 am]

BILLING CODE 4910–13–U

DEPARTMENT OF TRANSPORTATION

Federal Aviation Administration

14 CFR Part 39

[Docket No. 99–CE–27–AD; Amendment 39–11746; AD 2000–10–22]

RIN 2120–AA64

Airworthiness Directives; REVO, Incorporated Models Lake LA–4, Lake LA–4A, Lake LA–4P, Lake LA–4–200, and Lake Model 250 Airplanes

AGENCY: Federal Aviation Administration, DOT.

ACTION: Final rule; request for comments.

SUMMARY: This amendment adopts a new airworthiness directive (AD) that applies to certain REVO, Incorporated (REVO) Models Lake LA–4, Lake LA–4A, Lake LA–4P, Lake LA–4–200, and Lake Model 250 airplanes. This AD requires you to: inspect the left and right wing upper and lower spar doublers for cracks; replace any cracked parts; and incorporate a modification kit. This AD is the result of a report of a fatigue crack found at the second most inboard wing attachment bolt hole on one of the affected airplanes. Similar fatigue cracking has since been reported on seven more of the affected airplanes, including incidents where the fatigue cracking occurred on airplanes with less than 500 hours time-in-service (TIS). The actions specified by this AD are intended to detect and correct cracks in the wing spars, which could result in the wing separating from the airplane with consequent loss of control.

DATES: This AD becomes effective on June 20, 2000.

The Director of the Federal Register approved the incorporation by reference of certain publications listed in the regulation as of June 20, 2000.

The Federal Aviation Administration (FAA) must receive any comments on this rule on or before July 28, 2000.

ADDRESSES: Submit comments in triplicate to the FAA, Central Region, Office of the Regional Counsel, Attention: Rules Docket No. 99–CE–27–AD, 901 Locust, Room 506, Kansas City, Missouri 64106.

You may get the service information referenced in this AD from REVO, Incorporated, P.O. Box 312, One High Street, Sanford, Maine 04073. You may examine this information at FAA, Central Region, Office of the Regional Counsel, Attention: Rules Docket No. 99–CE–27–AD, 901 Locust, Room 506, Kansas City, Missouri 64106; or at the Office of the Federal Register, 800 North Capitol Street, NW, suite 700, Washington, DC.

FOR FURTHER INFORMATION CONTACT: Mr. Richard B. Noll, Aerospace Engineer, FAA, Boston Aircraft Certification Office, 12 New England Executive Park, Burlington, Massachusetts 01803; telephone: (781) 238–7160; facsimile: (781) 238–7199.

SUPPLEMENTARY INFORMATION:

Discussion

What Caused This AD?

This AD is the result of a report of fatigue cracks that were found at the second-most inboard wing attachment bolt hole on a REVO Lake Model 250 airplane. The cracks were detected during wing repair where the wing spar and wing skin were disassembled. Further analysis indicated that the cracks initiated at a machined notch at the flange termination point of the spar cap.

The REVO Models Lake LA–4, Lake LA–4A, Lake LA–4P, and Lake LA–4–200 airplanes are of the same type design as the Lake Model 250 airplanes. Fatigue cracking similar to that of the above-referenced report has been found on seven more of these airplanes.

What Is the Potential Impact If FAA Took No Action?

Cracks in the wing spars, if not detected and corrected in a timely manner, could result in the wing separating from the airplane with consequent loss of control.

Has FAA Taken Any Action to This Point?

We issued a notice of proposed rulemaking (NPRM) to amend part 39 of the Federal Aviation Regulations (14 CFR part 39) to include an AD that would apply to certain REVO Models Lake LA–4, Lake LA–4A, Lake LA–4P, Lake LA–4–200, and Lake Model 250 airplanes. We published this NPRM in the **Federal Register** on October 6, 1999 (64 FR 54234). The NPRM proposed to require you to accomplish the following:

—Inspect the left and right wing upper and lower spar caps and doublers for cracks;
—Replace any cracked parts;
—Incorporate a modification kit if damaged past a certain level; and
—Report the results of the inspection to FAA.

REVO Service Bulletin B–79, dated June 12, 1999, includes the procedures necessary for you to accomplish the proposed inspection and modification.

Was the Public Invited To Comment?

The FAA offered interested persons the opportunity to participate in the making of this amendment. The following paragraphs present the comments received on the NPRM. Also included is FAA's response to each comment, including any changes incorporated into the final rule based on the comments.

Comment Issue No. 1: Wing Spar Cracking Does Not Warrant AD Action

What are the Commenters' Concerns? Numerous commenters question FAA's justification for issuing an AD. Several commenters do not believe our service difficulty database provides accurate information. A few commenters recommend that we conduct additional research on the cause of the wing spar cracks and determine if the cracks are unique to a particular configuration of the affected airplanes. Other commenters propose various causes of the cracks, including:

—Installation of auxiliary fuel tanks in the wing floats;
—Increased braking power in the Model Lake LA–4–200 and Lake Model 250 airplanes; and
—The presence of corrosion.

What is FAA's Response to the Concerns? We do not concur that the AD is not justified. We began our investigation of the wing spar cracks on the affected airplanes when the Australian Civil Aviation Safety Authority reported cracks in both the spar cap and doubler in the lower spar of a Lake Model 250 airplane. We then received several reports of similar cracking from personnel of maintenance and repair facilities that were working on the affected airplanes. Reports indicated that both the upper and lower spars were cracked. These subsequent reports did not specify corrosion damage. All of the wing spar cracks initiated at a machined notch at the flange termination point of the spar cap

at the second-most inboard wing attachment bolt hole.

We also initiated laboratory examinations of the cracked spars. These examinations revealed that fatigue caused the cracks and were associated with the roughness of the notch area. The certification basis for the affected airplanes did not require an evaluation of fatigue characteristics. A database of either analytical results or test data does not exist. However, we performed a fatigue analysis of the affected airplanes in the notch area in developing the proposed inspection compliance times. Our analysis of this situation included working with the manufacturer to develop inspection procedures for the spar doublers and spar cap angles and a modification (doubler kit) for the wing spar. We then determined that enough information existed to implement AD action in order to assure the continued airworthiness of the affected airplanes. Thus, we issued an NPRM to propose inspections for cracks and repair, replacement, and modification, as necessary.

We are not changing the AD as a result of these comments.

Comment Issue No. 2: Do Not Require the Spar Cap Inspection

What are the Commenters' Concerns? Several commenters recommend that FAA not require the spar cap inspection in accordance with REVO, Inc. Service Bulletin B–79, dated June 12, 1999. The commenters offer the following explanations for eliminating this inspection:

—Accomplishing the inspection could cause damage to the spar cap/doubler;
—The number of personnel with the expertise necessary to accomplish the inspection is limited;
—The fluorescent dye penetrant inspection is difficult to implement and is less effective than a visual or borescope examination; and
—There are limited maintenance/repair facilities capable of conducting the inspection.

What are FAA's Responses to the Concerns? We concur that the spar cap inspection is not necessary. The inspection of the spar cap was intended to look for additional cracks outside of the notch area. We are eliminating the spar cap inspection from the AD for the following reasons:

—The cracks detected on the previously-referenced airplanes developed in the notch area and not in the spar cap; and
—We have received several additional reports of airplanes with cracks in the notch area and nowhere else.

We are only requiring a visual inspection of the wing spar doublers instead of a dye penetrant inspection. REVO, Inc. has revised Service Bulletin B–79 (R1—Revised January 5, 2000) to incorporate the visual inspection change.

Comment Issue No. 3: Provide Alternatives to the Proposed Requirements

What are the Commenters' Concerns? Several commenters recommend alternative methods of compliance to meet the safety intent of the AD. These alternatives are:

—Accomplish the inspection utilizing borescope procedures;
—Accomplish the inspection utilizing visual procedures;
—Only inspect the bolt holes;
—Cut inspection holes in the wing skin; and
—Allow repetitive inspections instead of requiring the incorporation of the Aerofab B–79 kit.

What is FAA's Response to the Concerns? We do not concur that any of the alternatives alone are valid to meet the safety intent of this AD. Inspecting the wing spar doubler in accordance with the procedures in REVO, Inc. Service Bulletin B–79, dated June 12, 1999, assures the airworthiness of this component prior to installing the doubler kit (Aerofab B–79 kit). Installing this doubler kit gives the spar an adequate fatigue life and eliminates the need for repetitive inspections. We do not concur that cutting holes in the wing skin for inspections is an acceptable alternative because of the sensitive nature of the wing skin.

We also do not concur with allowing repetitive inspections instead of mandatory incorporation of the Aerofab B–79 kit. Constant removal of the bolts could cause unnecessary damage. The FAA's policy is to require a modification when incorporation of that modification could eliminate or reduce the number of required inspections.

We are not changing the AD as a result of these comments.

Comment Issue No. 4: Eliminate Certain Airplanes From the Applicability of the AD

What are the Commenters' Concerns? Several commenters request that FAA not include the Model Lake LA–4 airplanes in the applicability of the final rule AD. The commenters state that the applicability should be based on the weight, auxiliary fuel, and brake differences of the airplanes.

One commenter concurs with the applicability of the NPRM.

What is FAA's Response to the Concerns? We have determined that this AD should apply to the Model Lake LA–4 airplanes. The service difficulty database clearly shows the need to address the wing spar condition on the Model Lake LA–4–200 and Lake Model 250 airplanes. The Model Lake LA–4 airplanes are included because:

—The wing/spar attachment design is the same as the Model Lake LA–4–200 airplanes;
—The gross weight is only 200 pounds less than the Model Lake LA–4–200 airplanes; and
—These airplanes have been in service longer than the Model Lake LA–4–200 airplanes.

For these reasons, we have determined that the Model Lake LA–4 airplanes are also susceptible to wing spar fatigue cracking and the AD must apply to these airplanes.

We are not changing the AD as a result of these comments.

Comment Issue No. 5: Revise the Methods of Incorporating the Doubler Kit

What are the Commenters' Concerns? Several commenters suggest revisions to the Aerofab B–79 doubler kit. These suggestions include:

1. Revising the rivet removal method;
2. Utilizing bolts instead of rivets;
3. Retaining the original bolts for the Model Lake LA–4 airplanes; and
4. Redesigning the doubler.

What are FAA's Responses to the Concerns? We concur with these suggestions, as follows:

1. We concur and will require accomplishment in accordance with Revo, Inc. Service Bulletin B–79 R1, Revised January 5, 2000. This revised service bulletin incorporates the proposed rivet removal methods;

2. We concur. Revo, Inc. Service Bulletin B–79 R1, Revised January 5, 2000, allows the use of AN3 bolts, and accomplishment of the AD is required in accordance with this service bulletin;

3. We do not concur that you may retain the original bolts for the Model Lake LA–4 airplanes. The new design configuration of the wing spar caps with the doublers requires longer bolts than originally utilized; and

4. We do not concur with the need to redesign the doubler. Incorporation of the doubler kit on the affected airplanes restores wing spars to their required strength if a crack is present in the notch area of a spar cap. Incorporation of the doubler kit also provides the strength and stability to prevent future fatigue cracking.

Comment Issue No. 6: Difference Between the Proposed AD and the Service Bulletin

What are the Commenters' Concerns? Two commenters note a difference between the service bulletin and the proposed AD, regarding the dye penetrant inspection procedure. One of these commenters also points out that ASTM E1417–95 was referred to as ASTM E1417–99 in the NPRM.

What is FAA's Response to the Concerns? We concur that there is a difference between the dye penetrant inspection procedure proposed in the NPRM and that contained in the original service bulletin. When the AD and service bulletin differ, the AD takes precedence. In addition, FAA received a revision to the ASTM document (E1417–99 from E1417–95) after preparing the NPRM.

However, as discussed previously, FAA is not requiring the dye penetrant inspection.

Comment Issue No. 7: Do Not Include the Reporting Requirement

What is the Commenters' Concern? Seven commenters recommend that FAA not require the reporting requirement for the dye penetrant inspection. These commenters state that this proposed requirement is irrelevant to the safety of the aircraft.

What is FAA's Response to the Concern? We concur. As discussed previously, FAA is not including this inspection in the AD, so there is no need for the reporting requirement.

We are not including the reporting requirement in the AD.

Comment Issue No. 8: Inspect the Spar Caps and Doublers for Corrosion Any Time a Wing Is Removed

What are the Commenters' Concerns? Six commenters request that FAA require inspection of the of spar caps and doublers for corrosion any time a wing is removed. The commenters recommend this inspection from the roof rib to the first rib outboard or to the inboard fuel tank.

What is FAA's Response to the Concerns? We do not concur. We have not received any record of wing corrosion on the affected airplanes. The actions in this AD address the unsafe condition.

We are not changing the AD as result of these comments.

Comment Issue No. 9: Redesign the Wing Attachment

What are the Commenters' Concerns? One commenter recommends a redesign of the wing attachment area to correct the unsafe condition. Another commenter suggests that the manufacturer conduct a test of the wing/fuselage attachment area.

What is FAA's Response to the Concerns? We have determined that incorporating the doubler kit restores the wing spars of the affected airplanes to their required strength and addressses the unsafe condition referenced in this AD. We will evaluate any data pertaining to a redesign of the wing attachment area or other alternative method of compliance, as long as it is submitted in accordance with the procedures included in this AD.

We are not changing the AD as a result of these comments.

Comment Issue No. 10: The FAA Underestimated the Cost Impact

What are the Commenters' Concerns? Two commenters state that FAA underestimated the costs of implementing the actions proposed in the NPRM. Another commenter states that the cost impact analysis is inadequate because it is designed to address transport category airplanes and not general aviation aircraft. This commenter suggests that the costs of accomplishing this AD could exceed $5,000 per airplane.

What is FAA's Response to the Concerns? We do not concur that the cost analysis is inadequate. The cost impact as proposed in the NPRM is $4,920 per airplane ($2,400 for the inspections and $2,520 for the modification). However, we are not requiring wing removal and a dye penetrant inspection in the AD. We are now only requiring a visual inspection of the wing spar doublers (with replacement if found cracked) and modification. This reduces the time and cost necessary to accomplish the inspection from approximately 40 workhours per airplane to approximately 1 workhour per airplane.

Comment Issue No. 11: Withdraw the AD

What is the Commenter's Concern? One commenter requests that FAA withdraw the NPRM because the service bulletin is effective.

What is FAA's Response to the Concern? We do not concur. The only way we can assure that all affected airplane owners/operators accomplish the actions in a service bulletin is through the issuance of an AD.

We are not changing the AD as a result of these comments.

Comment Issue No. 12: Change the Compliance Time

What are the Commenters' Concerns? Several commenters request an extension to the compliance time. The commenters state that the available repair/maintenance facilities could not accomplish the work on all affected airplanes within the proposed compliance time.

One commenter recommends requiring repetitive inspections of the bolt holes and only requiring the doubler kit if cracks are found during an inspection.

Two commenters request a reduction in the compliance time to 25 hours time-in-service (TIS) to coincide with the service bulletin. This commenter refers to an incident where the wing spar was cracked on an affected airplane with less than 300 hours TIS.

What is FAA's Response to the Concerns? Since issuance of the NPRM, we have received information regarding wing spar cracks on an airplane with 270 hours TIS. We also have additional reports of wing spar cracking on airplanes with 556 hours TIS and 538 hours TIS.

Based on this information, we do not concur with the request to extend the compliance time. We are reducing the compliance time although not to coincide with the service bulletin. We have determined that the wing spars on all of the affected airplanes should be inspected within 50 hours TIS or 12 months after the effective date of the AD (whichever occur first), regardless of the total number of hours currently accumulated on the wing spar. The NPRM proposed to allow low time airplanes to reach 500 hours total TIS on the wing spar before requiring inspection and modification. Because the latest reports show that cracking could occur prior to 300 hours TIS, we have determined that the 50-hour TIS or 12-month compliance time will eliminate the unsafe condition presented in this AD without inadvertently grounding any of the affected airplanes.

We do not concur with allowing repetitive inspections instead of mandatory modification. Constant removal of the bolts could cause unnecessary damage. The FAA's policy is to require a modification when incorporation of that modification could eliminate or reduce the number of required inspections.

The FAA's Determination and Followup Action

What Have We Decided?

After careful review of all available information related to the subject presented above, including the above-referenced comments, FAA has determined that:

—The changes to the proposed AD as described in the above comment disposition should be incorporated; and
—AD action should be taken to incorporate these changes to detect and correct cracks in the wing spar doublers, which could result in the wing separating from the airplane with consequent loss of control.

What Is Our Next Action?

Since the change in the compliance time increases the burden on the owners/operators of the affected airplanes over what was proposed in the NPRM, we are required to allow the public additional time to comment on the AD.

Because additional reports show the cracks are occurring in the wing spar doublers on the affected airplanes with less hours TIS than initially expected, FAA finds that notice and opportunity for public prior comment are impracticable. Therefore, good cause exists for making this amendment effective in less than 30 days.

What Does This AD Require?

This AD requires you to accomplish the following:
—Inspect the left and right wing upper and lower spar doublers for cracks;
—Replace any cracked parts; and
—Incorporate a modification kit.

What Procedures Must You Use To Accomplish This AD?

You must use the procedures in Revo, Inc. Service Bulletin B–79 R1—Revised January 5, 2000, to accomplish this AD.

What Is the Compliance Time of This AD?

At whichever of the following that occurs first:
—Within the next 50 hours time-in-service (TIS) after June 20, 2000 (the effective date of this AD); or
—On or before June 20, 2001 (12 months after the effective date of this AD).

Why Is the Compliance in Both Hours TIS and Calendar Time?

The fatigue cracks on the wing spar doublers of affected airplanes may have already initiated and could be further developing on the low-usage airplanes as well as high-usage airplanes. Utilizing the dual compliance times would assure that cracks in the wing spars are detected on all affected airplanes in a timely manner without inadvertently grounding any of the affected airplanes.

Comments Invited

This action is in the form of a final rule and the FAA did precede it with notice and opportunity for public comment. However, the change in compliance time, as described above, has changed because of information received since the notice. FAA is issuing the information in this final rule without prior notice because an urgent situation concerning safety of flight exists. However, FAA is still inviting comments on this rule. You may submit whatever written data, views, or arguments you choose. You need to include the rule's docket number and submit your comments in triplicate to the address specified under the caption **ADDRESSES**. The FAA will consider all comments received on or before the closing date. We may amend this rule in light of comments received. Factual information that supports your ideas and suggestions is extremely helpful in evaluating the effectiveness of the AD action and determining whether we need to take additional rulemaking action.

The FAA is re-examining the writing style we currently use in regulatory documents, in response to the Presidential memorandum of June 1, 1998. That memorandum requires federal agencies to communicate more clearly with the public. We are interested in your comments on whether the style of this document is clearer, and any other suggestions you might have to improve the clarity of FAA communications that affect you. You can get more information about the Presidential memorandum and the plain language initiative at http://www.plainlanguage.gov.

The FAA specifically invites comments on the overall regulatory, economic, environmental, and energy aspects of the rule that might suggest a need to modify the rule. You may examine all comments we receive before and after the closing date of the rule in the Rules Docket. We will file a report in the Rules Docket that summarizes each FAA contact with the public that concerns the substantive parts of this AD.

If you want us to acknowledge the receipt of your comments, you must include a self-addressed, stamped postcard. On the postcard, write ''Comments to Docket No. 99–CE–27–AD.'' We will date stamp and mail the postcard back to you.

Regulatory Impact

These regulations will not have a substantial direct effect on the States, on the relationship between the national Government and the States, or on the distribution of power and responsibilities among the various levels of government. Therefore, FAA has determined that this final rule does not have federalism implications under Executive Order 13132.

The FAA has determined that this regulation is an emergency regulation that must be issued immediately to correct an unsafe condition in aircraft, and is not a significant regulatory action under Executive Order 12866. We have determined that this action involves an emergency regulation under DOT Regulatory Policies and Procedures (44 FR 11034, February 26, 1979). If FAA determines that this emergency regulation otherwise would be significant under DOT Regulatory Policies and Procedures, we will prepare a final regulatory evaluation. You may obtain a copy of the evaluation (if required) from the Rules Docket.

List of Subjects in 14 CFR Part 39

Air transportation, Aircraft, Aviation safety, Incorporation by Reference, Safety.

Adoption of the Amendment

Accordingly, under the authority delegated to me by the Administrator, the Federal Aviation Administration amends part 39 of the Federal Aviation Regulations (14 CFR part 39) as follows:

PART 39—AIRWORTHINESS DIRECTIVES

1. The authority citation for part 39 continues to read as follows:

Authority: 49 U.S.C. 106(g), 40113, 44701.

§ 39.13 [Amended]

2. FAA amends § 39.13 by adding a new airworthiness directive (AD) to read as follows:

2000–10–22 Revo, Incorporated: Amendment 39–11746; Docket No. 99–CE–27–AD.

(a) *What airplanes are affected by this AD?* This AD applies to the following model and serial number airplanes, certificated in any category; that incorporate any of the wing spar part numbers (or FAA-approved equivalent part numbers) that are specified below the airplane models and serial numbers:

AFFECTED AIRPLANES

Model	Serial Nos.
Lake LA 4	246 through 421, 423 through 429, 445, and 446.
Lake LA–4A	244 and 245.
Lake LA–4P	121.
Lake LA–4 200	422, 430 through 444, and all serial numbers after 446.
Lake Model 250	1 through 232.

WING SPAR PART NUMBERS INCORPORATED

Wing spar parts	Part Nos.
Upper Spar Cap Angles.	2–1610–015 and 2–1610–016.
Lower Spar Cap Angles.	2–1610–075 and 2–1610–076.
Upper Spar Doublers	2–1610–061 and 2–1610–081 and 2–1610–065.

WING SPAR PART NUMBERS INCORPORATED

Wing spar parts	Part Nos.
Lower Spar Doublers	2–1610–063 and 2–1610–083.

(b) *Who must comply with this AD?* This AD applies to anyone who wishes to operate any of the above airplanes on the U.S. Register .

(c) *What problem does this AD address?* The actions of this AD are intended to detect and correct cracks in the wing spars, which could result in loss of the wing with consequent loss of control of the airplane.

(d) *What actions must I accomplish to address this problem?* To address this problem, you must accomplish the following:

Action	When	Procedures
(1) Inspect the left and right wing upper and lower spar doublers for cracks.	At whichever of the following that occurs first: (i) Within the next 50 hours time-in-service (TIS) after June 20, 2000 (the effective date of this AD); or. (ii) On or before June 20, 2001 (12 months after the effective date of this AD).	In accordance with the Inspection section of Revo, Inc. Service Bulletin B–79 R1—Revised January 5, 2000.
(2) Replace any cracked wing spar doubler with a new part that incorporates the same part number (or FAA-approved equivalent part number).	Prior to further flight after the required inspection.	In accordance with the applicable maintenance manual.
(3) Incorporate Modification Kit B–79	Prior to further flight after the required inspection.	In accordance with the Kit Installation section of Revo, Inc. Service Bulletin B–79 R1—Revised January 5, 2000.

(e) *What if I need to replace a wing on my airplane?* After the effective date of this AD, you may not install a wing on any of the affected airplanes, unless one of the following exists:

(1) The wing is new from the factory; or

(2) The inspection, applicable replacement, and kit incorporation requirements of this AD have been accomplished at the time of installation.

(f) *Can I comply with this AD in any other way?* You may use an alternative method of compliance or adjust the compliance time if:

(1) Your alternative method of compliance provides an equivalent level of safety; and

(2) The Manager, Boston Aircraft Certification Office (ACO), approves your alternative. Submit your request through an FAA Principal Maintenance Inspector, who may add comments and then send it to the Manager, Boston ACO.

Note: This AD applies to each airplane identified in paragraph (a) of this AD, regardless of whether it has been modified, altered, or repaired in the area subject to the requirements of this AD. For airplanes that have been modified, altered, or repaired so that the performance of the requirements of this AD is affected, the owner/operator must request approval for an alternative method of compliance in accordance with paragraph (f) of this AD. The request should include an assessment of the effect of the modification, alteration, or repair on the unsafe condition addressed by this AD; and, if you have not eliminated the unsafe condition, specific actions you propose to address it.

(g) *Where can I get information about any already-approved alternative methods of compliance?* Contact Mr. Richard B. Noll, Aerospace Engineer, FAA, Boston Aircraft Certification Office, 12 New England Executive Park, Burlington, Massachusetts 01803; telephone: (781) 238–7160; facsimile: (781) 238–7199.

(h) *What if I need to fly the airplane to another location to comply with this AD?* The FAA can issue a special flight permit under sections 21.197 and 21.199 of the Federal Aviation Regulations (14 CFR 21.197 and 21.199) to operate your airplane to a location where you can accomplish the requirements of this AD.

(i) *Are any service bulletins incorporated into this AD by reference?* Actions required by this AD must be done in accordance Revo, Inc. Service Bulletin B–79 R1—Revised January 5, 2000. The Director of the Federal Register approved this incorporation by reference under 5 U.S.C. 552(a) and 1 CFR part 51. You can get copies from REVO, Incorporated, P.O. Box 312, One High Street, Sanford, Maine 04073. You can look at copies at FAA, Central Region, Office of the Regional Counsel, 901 Locust, Room 506, Kansas City, Missouri; or at the Office of the Federal Register, 800 North Capitol Street, NW, suite 700, Washington, DC.

(j) *When does this amendment become effective?* This amendment becomes effective on June 20, 2000.

Issued in Kansas City, Missouri, on May 17, 2000.

Michael Gallagher,

Manager, Small Airplane Directorate, Aircraft Certification Service.

[FR Doc. 00–13084 Filed 5–25–00; 8:45 am]

BILLING CODE 4910–13–U

DEPARTMENT OF TRANSPORTATION

Federal Aviation Administration

14 CFR Part 39

[Docket No. 98–NM–99–AD; Amendment 39–11739; AD 2000–10–15]

RIN 2120–AA64

Airworthiness Directives; Airbus Model A320 Series Airplanes

AGENCY: Federal Aviation Administration, DOT.

ACTION: Final rule.

SUMMARY: This amendment supersedes two existing airworthiness directives (AD), applicable to certain Airbus Model A320 series airplanes, that currently require modification of the rear spar web of the wing and cold expansion of certain attachment holes for the forward pintle fitting and certain holes at the actuating cylinder anchorage of the main landing gear (MLG). This amendment adds a requirement for repetitive inspections to detect fatigue cracking in certain areas of the rear spar of the wing, and corrective action, if necessary. This

amendment also provides for optional terminating action for the requirements of this AD. This amendment is prompted by issuance of mandatory continuing airworthiness information by a foreign civil airworthiness authority. The actions specified by this AD are intended to detect and correct fatigue cracking, which may lead to reduced structural integrity of the wing and the MLG.

DATES: Effective June 30, 2000.

The incorporation by reference of certain publications listed in the regulations is approved by the Director of the Federal Register as of June 30, 2000.

The incorporation by reference of certain other publications was approved previously by the Director of the Federal Register as of June 11, 1993 (58 FR 27923, May 12, 1993), and February 14, 1994 (59 FR 1903, January 13, 1994).

ADDRESSES: The service information referenced in this AD may be obtained from Airbus Industrie, 1 Rond Point Maurice Bellonte, 31707 Blagnac Cedex, France. This information may be examined at the Federal Aviation Administration (FAA), Transport Airplane Directorate, Rules Docket, 1601 Lind Avenue, SW., Renton, Washington; or at the Office of the Federal Register, 800 North Capitol Street, NW., suite 700, Washington, DC.

FOR FURTHER INFORMATION CONTACT: Norman B. Martenson, Manager, International Branch, ANM–116, FAA, Transport Airplane Directorate, 1601 Lind Avenue, SW., Renton, Washington 98055–4056; telephone (425) 227–2110; fax (425) 227–1149.

SUPPLEMENTARY INFORMATION: A proposal to amend part 39 of the Federal Aviation Regulations (14 CFR part 39) by superseding AD 93–08–15, amendment 39–8563 (58 FR 27923, May 12, 1993), and AD 93–25–13, amendment 39–8777 (59 FR 1903, January 13, 1994), which are both applicable to certain Airbus Model A320 series airplanes, was published in the **Federal Register** on February 10, 2000 (65 FR 6566). The action proposed to continue to require modification of the wing rear spar web and cold expansion of certain attachment holes for the forward pintle fitting and certain holes at the actuating cylinder anchorage of the MLG. The AD proposed to add a requirement for repetitive ultrasonic inspections to detect fatigue cracking in certain areas of the wing rear spar, and repair of cracking. The AD also proposed to provide for optional terminating action for the inspections proposed by this AD.

Comments Received

Interested persons have been afforded an opportunity to participate in the making of this amendment. Due consideration has been given to the comments received.

Support for the Proposal

One commenter concurs with the proposed AD. Another commenter states that Airbus Production Modification 24591 is installed on its airplanes; therefore, it is not affected by the proposed AD.

Inspection Threshold for Certain Airplanes

One commenter requests that the proposed AD be revised to allow ''Group 2'' airplanes to accomplish the initial inspection of the wing rear spar within 12,000 flight cycles after accomplishment of Airbus Service Bulletin A320–57–1060. The commenter defines ''Group 1'' airplanes as manufacturer's serial numbers (MSN) 002 through 021, on which Airbus Service Bulletins A320–57–1004 and A320–57–1060 are accomplished as retrofit. ''Group 2'' airplanes are defined as MSN's 022 through 051, on which Airbus Modification 20740 (equivalent to A320–57–1004) has been accomplished in production, and Airbus Service Bulletin A320–57–1060 as retrofit.

The commenter notes that ''Group 1'' airplanes are granted 12,000 flight cycles after accomplishment of A320–57–1060, yet ''Group 2'' airplanes are required to undergo inspection prior to accumulation of 17,300 total flight cycles, regardless of when modification per A320–57–1060 was accomplished. The commenter states that ''Group 1'' and ''Group 2'' airplanes are in the same configuration and will have a similar fatigue life; therefore, both should have the same inspection threshold.

The FAA does not concur. Although the FAA acknowledges that ''Group 1'' and ''Group 2'' airplanes may be in a similar modification configuration, the design configuration of these airplanes is different. ''Group 1'' airplanes are composed of Model A320–100 series airplanes, and ''Group 2'' airplanes are composed of Model A320–200 series airplanes. Model A320–200 series airplanes are equipped with a center fuel tank (not installed on Model A320–100 series airplanes) that increases the airplanes' weight. For this reason, it is necessary that ''Group 2'' airplanes be inspected for cracking prior to accumulation of 17,300 total flight cycles, regardless of when Service Bulletin A320–57–1060 is accomplished. No change is made to the final rule.

Terminating Modification for Certain Airplanes

One commenter requests that modification in accordance with Airbus Service Bulletin A320–57–1089 be considered as terminating action to all inspection requirements if accomplished prior to the initial inspection interval, or to repetitive inspections if accomplished after the initial inspection interval. The commenter states that terminating action credit is allowed under paragraph (e) of the proposed AD only if accomplished prior to 12,000 total flight cycles. The commenter states that accomplishment of the terminating modification includes a non-destructive test inspection of the inner rear spar at each hole location. Since this inspection during the modification will ensure that the inner rear spar is free of defects, terminating action to the follow-on inspection requirements should also be provided.

The FAA notes that terminating modification to the inspection requirements of the AD is already provided for in paragraph (e) of the proposed AD, and considers that clarification of the provisions for terminating modification is necessary. As stated in the second sentence of paragraph (e) of the AD, the threshold of 12,000 total flight cycles is required only if modification per Service Bulletin A320–57–1089 is chosen in lieu of accomplishing the modifications required by paragraphs (a) and (b) of the AD. However, the modification also constitutes acceptable terminating action for the ultrasonic inspection requirements of the AD, as stated in the first sentence of paragraph (e) of the AD. Paragraph (e) has been revised to more clearly specify the terminating action provisions of the AD.

Cost Estimate for Terminating Modification

Two commenters request that the proposed AD be revised to provide correct cost estimates for the optional modification described in Airbus Service Bulletin A320–57–1089. The commenters state that the service bulletin lists the labor cost as 980 work hours, yet the proposed AD provides an estimate of 750 work hours.

The FAA acknowledges that the service bulletin estimate specifies additional work hours (for access and close) that are not included in the proposed AD. However, the cost impact information in an AD typically describes only the ''direct'' costs of

specific actions, and does not include incidental costs, such as the time required to gain access and close up; planning time; or time necessitated by other administrative actions. Because incidental costs may vary significantly from operator to operator, they are almost impossible to calculate. Additionally, since this is an optional modification, operators may choose not to incur such costs, or may minimize costs by accomplishing the modification during scheduled maintenance. No change is made to the final rule.

Additional Changes to the AD

To clarify actions for airplanes on which modifications have been installed in production and those on which service bulletins have been accomplished as retrofit, the FAA has revised paragraph (c)(2) of the AD to refer to certain modifications as ''Airbus Production Modification * * *.'' Additionally, a heading has been included to specify the actions required by paragraphs (c) and (d) of the AD.

Conclusion

After careful review of the available data, including the comments noted above, the FAA has determined that air safety and the public interest require the adoption of the rule with the changes previously described. The FAA has determined that these changes will neither increase the economic burden on any operator nor increase the scope of the AD.

Cost Impact

There are approximately 126 airplanes of U.S. registry that will be affected by this AD.

It takes approximately 60 work hours per airplane to accomplish the modification of the rear spar web of the wing, as required by AD 93–08–15 and retained in this AD, at an average labor rate of $60 per work hour. Based on these figures, the total cost impact of the modification on U.S. operators is estimated to be $3,600 per airplane.

It takes approximately 600 work hours per airplane to accomplish the cold expansion of certain holes associated with the MLG, as required by AD 93–25–13 and retained in this AD, at an average labor rate of $60 per work hour. Required parts are provided by the manufacturer at no cost to the operators. Based on these figures, the total cost impact of the cold expansion on U.S. operators is estimated to be $36,000 per airplane.

The new inspection that is required by this new AD will take approximately 24 work hours per airplane to accomplish, at an average labor rate of $60 per work hour. Based on these figures, the cost impact of the new requirements of this AD on U.S. operators is estimated to be $181,440, or $1,440 per airplane, per inspection cycle.

The cost impact figures discussed above are based on assumptions that no operator has yet accomplished any of the requirements of this AD action, and that no operator would accomplish those actions in the future if this AD were not adopted.

Should an operator elect to accomplish the optional terminating action specified in this AD, it would take approximately 750 work hours, at an average labor rate of $60 per work hour. The required parts would cost $27,036; $30,595; or $32,727; depending on the airplane configuration. Based on these figures, the cost per airplane of the optional terminating action provided by this AD is estimated to be $72,036; $75,595; or $77,727.

Regulatory Impact

The regulations adopted herein will not have a substantial direct effect on the States, on the relationship between the national Government and the States, or on the distribution of power and responsibilities among the various levels of government. Therefore, it is determined that this final rule does not have federalism implications under Executive Order 13132.

For the reasons discussed above, I certify that this action (1) is not a ''significant regulatory action'' under Executive Order 12866; (2) is not a ''significant rule'' under DOT Regulatory Policies and Procedures (44 FR 11034, February 26, 1979); and (3) will not have a significant economic impact, positive or negative, on a substantial number of small entities under the criteria of the Regulatory Flexibility Act. A final evaluation has been prepared for this action and it is contained in the Rules Docket. A copy of it may be obtained from the Rules Docket at the location provided under the caption **ADDRESSES.**

List of Subjects in 14 CFR Part 39

Air transportation, Aircraft, Aviation safety, Incorporation by reference, Safety.

Adoption of the Amendment

Accordingly, pursuant to the authority delegated to me by the Administrator, the Federal Aviation Administration amends part 39 of the Federal Aviation Regulations (14 CFR part 39) as follows:

PART 39—AIRWORTHINESS DIRECTIVES

1. The authority citation for part 39 continues to read as follows:

Authority: 49 U.S.C. 106(g), 40113, 44701.

§ 39.13 [Amended]

2. Section 39.13 is amended by removing amendments 39–8563 (58 FR 27923, May 12, 1993) and 39–8777 (59 FR 1903, January 13, 1994), and by adding a new airworthiness directive (AD), amendment 39–11739, to read as follows:

2000–10–15 Airbus Industrie: Amendment 39–11739. Docket 98–NM–99–AD. Supersedes AD 93–08–15, Amendment 39–8563; and AD 93–25–13, Amendment 39–8777.

Applicability: Model A320 series airplanes, certificated in any category, except those on which Airbus Modification 24591 (Airbus Service Bulletin A320–57–1089, dated December 22, 1996; Revision 01, dated April 17, 1997; or Revision 02, dated November 6, 1998) has been accomplished.

Note 1: This AD applies to each airplane identified in the preceding applicability provision, regardless of whether it has been otherwise modified, altered, or repaired in the area subject to the requirements of this AD. For airplanes that have been modified, altered, or repaired so that the performance of the requirements of this AD is affected, the owner/operator must request approval for an alternative method of compliance in accordance with paragraph (f)(1) of this AD. The request should include an assessment of the effect of the modification, alteration, or repair on the unsafe condition addressed by this AD; and, if the unsafe condition has not been eliminated, the request should include specific proposed actions to address it.

Compliance: Required as indicated, unless accomplished previously.

To detect and correct fatigue cracking in certain areas of the rear spar of the wing, which may lead to reduced structural integrity of the wing and the main landing gear (MLG), accomplish the following:

Restatement of Actions Required by AD 93–08–15

(a) For airplanes having manufacturer's serial numbers (MSN) 003 through 008 inclusive, and 010 through 021 inclusive: Prior to the accumulation of 12,000 total flight cycles, or within 500 flight cycles after June 11, 1993 (the effective date of AD 93–08–15, amendment 39–8563), whichever occurs later, modify the inner rear spar web of the wing in accordance with Airbus Service Bulletin A320–57–1004, Revision 1, dated September 24, 1992, or Revision 2, dated June 14, 1993.

Restatement of Actions Required by AD 93–25–13

(b) For airplanes having MSN's 002 through 051 inclusive: Prior to the accumulation of 12,000 total flight cycles, or within 2,000 flight cycles after February 14, 1994 (the effective date of AD 93–25–13,

amendment 39–8777), whichever occurs later, accomplish the requirements of paragraphs (b)(1) and (b)(2) of this AD in accordance with Airbus Service Bulletin A320–57–1060, dated December 8, 1992; or Revision 2, dated December 16, 1994.

(1) Perform a cold expansion of all the attachment holes for the forward pintle fitting of the MLG, except for the holes that are for taper-lok bolts.

(2) Perform a cold expansion of the holes at the actuating cylinder anchorage of the MLG.

Note 2: Accomplishment of the cold expansion in accordance with Airbus Service Bulletin A320–57–1060, Revision 1, dated April 26, 1993, is also acceptable for compliance with the requirements of paragraph (b) of this AD.

New Actions Required by This AD

Ultrasonic Inspections and Corrective Action

(c) For all airplanes: Perform an ultrasonic inspection to detect cracking of the rear spar of the wing, in accordance with Airbus Service Bulletin A320–57–1088, Revision 02, dated July 29, 1999; at the applicable time specified by paragraph (c)(1) or (c)(2) of this AD. Repeat the inspection thereafter at intervals not to exceed 3,600 flight cycles.

(1) For airplanes on which the actions specified by Airbus Service Bulletin A320–57–1004, Revision 2, dated June 14, 1993, or earlier version; and Airbus Service Bulletin A320–57–1060, Revision 02, dated December 16, 1994, or earlier version; have been accomplished: Perform the inspection of all applicable fastener holes within 12,000 flight cycles after accomplishment of the service bulletins, or within 750 flight cycles after the effective date of this AD, whichever occurs later.

(2) For airplanes on which the actions specified by Airbus Production Modification 20740 and Airbus Service Bulletin A320–57–1060, Revision 2, dated December 16, 1994, or earlier version, have been accomplished; or on which Airbus Production Modifications 20740, 20741, and 20796 have been accomplished: Perform the inspections at the locations and applicable times specified by paragraphs (c)(2)(i) and (c)(2)(ii) of this AD.

(i) Perform the inspection of left and right fastener holes 52 to 55, 82, 83, 87, and 88; located in the rear spar of the wing; prior to the accumulation of 17,300 total flight cycles, or within 750 flight cycles after the effective date of this AD, whichever occurs later. If any cracking is found, prior to further flight, accomplish the requirements of paragraph (c)(2)(ii) of this AD.

(ii) Except as required by paragraph (c)(2)(i) of this AD: Perform the inspection of all fastener holes located in the rear spar of the wing that are not identified in paragraph (c)(2)(i) of this AD prior to the accumulation of 20,000 total flight cycles, or within 200 flight cycles after the effective date of this AD, whichever occurs later.

Note 3: Accomplishment of the actions specified by Airbus Service Bulletin A320–57–1088, dated September 30, 1996, or Revision 01, dated September 17, 1997, prior to the effective date of this AD is acceptable for compliance with the requirements of the initial inspection required by paragraph (c) of this AD.

(d) If any crack is found during any inspection required by paragraph (c) of this AD: Prior to further flight, repair in accordance with a method approved by either the Manager, International Branch, ANM–116, FAA, Transport Airplane Directorate; or the Direction Generale de l'Aviation Civile (DGAC) (or its delegated agent). For a repair method to be approved by the Manager, International Branch, ANM–116, as required by this paragraph, the Manager's approval letter must specifically reference this AD.

Optional Terminating Action

(e) Modification of all specified fastener holes in the rear spar of the wing in accordance with Airbus Service Bulletin A320–57–1089, dated December 22, 1996; Revision 01, dated April 17, 1997; or Revision 02, dated November 6, 1998; constitutes terminating action for the ultrasonic inspections required by paragraph (c) of this AD. Such modification, if accomplished prior to the accumulation of 12,000 total flight cycles, also constitutes terminating action for the actions required by paragraphs (a) and (b) of this AD.

Alternative Methods of Compliance

(f)(1) An alternative method of compliance or adjustment of the compliance time that provides an acceptable level of safety may be used if approved by the Manager, International Branch, ANM–116. Operators shall submit their requests through an appropriate FAA Principal Maintenance Inspector, who may add comments and then send it to the Manager, International Branch, ANM–116.

(2) Alternative methods of compliance, approved previously in accordance with AD 93–25–13; amendment 39–8777, are approved as alternative methods of compliance with this AD.

Note 4: Information concerning the existence of approved alternative methods of compliance with this AD, if any, may be obtained from the International Branch, ANM–116.

Special Flight Permits

(g) Special flight permits may be issued in accordance with sections 21.197 and 21.199 of the Federal Aviation Regulations (14 CFR 21.197 and 21.199) to operate the airplane to a location where the requirements of this AD can be accomplished.

Incorporation by Reference

(h) Except as required by paragraph (d) of the AD, the actions shall be done in accordance with Airbus Service Bulletin A320–57–1004, Revision 1, dated September 24, 1992; Airbus Service Bulletin A320–57–1004, Revision 2, dated June 14, 1993; Airbus Service Bulletin A320–57–1060, dated December 8, 1992; Airbus Service Bulletin A320–57–1060, Revision 2, dated December 16, 1994; or Airbus Service Bulletin A320–57–1088, Revision 02, including Appendix 01, dated July 29, 1999; as applicable. Airbus Service Bulletin A320–57–1004, Revision 2, dated June 14, 1993, contains the following list of effective pages:

Page No.	Revision level shown on page	Date shown on page
1, 4, 12, 14, 17–20, 22, 23, 28, 29	2	June 14, 1993.
15	1	September 24, 1992.
2, 3, 5–11, 13, 16, 21, 24–27, 30	Original	July 9, 1991.

(1) The incorporation by reference of Airbus Service Bulletin A320–57–1004, Revision 2, dated June 14, 1993; Airbus Service Bulletin A320–57–1060, Revision 2, dated December 16, 1994; and Airbus Service Bulletin A320–57–1088, Revision 02, including Appendix 01, dated July 29, 1999; is approved by the Director of the Federal Register in accordance with 5 U.S.C. 552(a) and 1 CFR part 51.

(2) The incorporation by reference of Airbus Service Bulletin A320–57–1004, Revision 1, dated September 24, 1992, was approved previously by the Director of the Federal Register as of June 11,1993 (58 FR 27923, May 12, 1993).

(3) The incorporation by reference of Airbus Service Bulletin A320–57–1060, dated December 8, 1992, was approved previously by the Director of the Federal Register as of February 14, 1994 (59 FR 1903, January 13, 1994).

(4) Copies may be obtained from Airbus Industrie, 1 Rond Point Maurice Bellonte, 31707 Blagnac Cedex, France. Copies may be inspected at the FAA, Transport Airplane Directorate, 1601 Lind Avenue, SW., Renton, Washington; or at the Office of the Federal Register, 800 North Capitol Street, NW., suite 700, Washington, DC.

Note 5: The subject of this AD is addressed in French airworthiness directive 1999–264–135(B), dated June 30, 1999.

(i) This amendment becomes effective on June 30, 2000.

Issued in Renton, Washington, on May 16, 2000.

Donald L. Riggin,

Acting Manager, Transport Airplane Directorate, Aircraft Certification Service.

[FR Doc. 00–12816 Filed 5–25–00; 8:45 am]

BILLING CODE 4910–13–U

DEPARTMENT OF COMMERCE

Bureau of Export Administration

15 CFR Parts 742, 743, 746, 772 and 774

[Docket No. 990625176–0029–02]

RIN 0694–AB86

Revisions and Clarifications to the Export Administration Regulations; Commerce Control List

AGENCY: Bureau of Export Administration, Commerce.

ACTION: Final rule.

SUMMARY: On July 23, 1999, the Bureau of Export Administration (BXA) published a final rule (64 FR 40106) that revised the Commerce Control List (CCL) based on Wassenaar Arrangement review. The final rule revised certain entries controlled for national security reasons in Categories 1,2,3,4,5,6,7, and 9 to conform with changes in the Wassenaar Arrangement's List of Dual-Use Goods and Technologies. This final rule amends the CCL by making certain revisions and clarifications and, in some cases, inserts material inadvertently omitted from the July 23 final rule. This rule also makes corresponding changes to parts 742, 743, 746 and 772 of the Export Administration Regulations.

DATES: Effective Date: This rule is effective May 26, 2000.

FOR FURTHER INFORMATION CONTACT: Kirsten Mortimer, Regulatory Policy Division, Office of Exporter Services, Bureau of Export Administration, Telephone: (202) 482–2440.

SUPPLEMENTARY INFORMATION: In July 1996, the United States and thirty-two other countries gave final approval to the establishment of a new multilateral export control arrangement, called the Wassenaar Arrangement on Export Controls for Conventional Arms and Dual-Use Goods and Technologies (Wassenaar Arrangement). The Wassenaar Arrangement contributes to regional and international security and stability by promoting transparency and greater responsibility in transfers of conventional arms and dual-use goods and technologies, thus preventing destabilizing accumulations of such items.

On January 15, 1998, the Bureau of Export Administration (BXA) published an interim rule (63 FR 2452) fulfilling U.S. commitments to the Wassenaar Arrangement by implementing the Wassenaar Arrangement of Dual-Use Goods and Technologies which is a list of dual-use items identified by Export Control Classification Numbers (ECCNs) as being controlled for national security (NS) reasons in the Commerce Control List (CCL). On July 23, 1999, BXA published a final rule (64 FR 40106) that revised a number of these national security controlled entries on the CCL to conform with recent changes in the Wassenaar List of Dual-Use Goods and Technologies. This rule corrects a number of inadvertent errors to the EAR that appeared in the July 23 rule.

The changes are summarized as follows:

In part 742, changes are made to sections 742.8, 742.10, 746.7, and Supplement 2 to part 742 to cross-reference certain paragraph references relating to ECCN 5A991 to reflect the renumbering of these paragraph references in the July rule.

In part 743, changes are made to section 743.1 to cross-reference certain paragraph references relating to ECCN 5A001 to reflect the renumbering of these paragraph references in the July rule.

In part 772, where definition in the EAR are described, the definition for ''positioning accuracy'' is changed to clarify that the 1988 version of the ISO standard applies to this definition. This clarification is also made to the Notes to the Category 2B (Materials Processing—Test, Inspection, and Production Equipment) of the CCL.

ECCN 3B991 is amended by removing a paragraph which was incorrectly referenced twice.

ECCN 5A001 is amended by adding License Exception LVS eligibility to underwater communications systems.

ECCN 5A991 is amended by fixing incorrect paragraph references made in the July rule.

ECCN 5B001 is amended by revising the phrase ''employing coherent transmission'' to read ''employing coherent optical transmission''. The word ''optical'' was mistakenly left out of the July rule.

ECCN 5D001 is amended by putting the word ''or'' in the correct place within the List of Items controlled section. This mistake was inadvertently made in the July rule.

ECCN 5E001 is amended by putting the word ''production'' in the correct paragraph. This mistake was inadvertently made in the July rule.

ECCN 5E991 is amended by adding descriptions for certain technologies that were removed from national security controls in the July rule. These technologies were removed from ECCN 5E001 in the July rule, and should have been moved into ECCN 5D991, as they continue to be controlled for anti-terrorism reasons.

ECCN 6A003 is amended by adding a dash to the phrase ''time-delay-and integration'' to read ''time-delay-and-integration''. This corrects a typographical error in the July rule.

Background

Specifically this rule makes the following revisions to parts 742, 743, 746, 772 and 774 of the Export Administration Regulations:

(1) In paragraphs 742.8(a)(2), 742.10(a)(2) (Anti-Terrorism Controls), and 746.7(a)(2)(ii) (Embargoes), the phrase ''ECCN 5A991.f'' is corrected to read ''ECCN 5A991.g''. This corresponds to the changes agreed to and implemented by the Wassenaar Arrangement.

(2) In Supplement 2 to part 742 (Anti-Terrorism Controls; Iran, Syria and Sudan Contract Sanctity Dates and Related Topics), in paragraph (c)(29), the phrase '' ECCN 5A001.c'' is removed and the phrase ''ECCN 5A991.c.1'' is revised to read ''ECCN 5A991.c''. This corresponds to the changes agreed to and implemented by the Wassenaar Arrangement.

(3) In paragraph 743.1(c)(1)(v) (Special Reporting), the phrase ''5A001.b.8'' is corrected to read ''5A001.b.3''. This corresponds to the changes agreed to and implemented by the Wassenaar Arrangement.

(4) In part 772 (Definitions of Terms), the definition for ''positioning accuracy'' is amended by adding the parenthetical reference ''(1988)'' immediately following ''ISO 230/2''. This clarifies that the 1988 version of the ISO standard applies.

(5) In Category 2B (Materials Processing—Test, Inspection, and Production Equipment) of the CCL, the Notes for Category 2B section is amended by revising note 5 to add the parenthetical reference ''(1988)'' immediately following ''ISO 230/2''. This clarifies that the 1988 version of the ISO standard applies.

(6) Export Control Classification Number (ECCN) 3B991 is amended by removing paragraph b.2.f.5. These items are already covered in paragraph b.2.f.1 of ECCN 3B991.

(7) ECCN 5A001 is amended by adding License Exception LVS eligibility to paragraph b.1. This corrects the inadvertent removal of LVS eligibility for underwater communications systems.

(8) ECCN 5A991 is amended by revising the paragraph references for paragraphs c.10.c and c.10.d to read c.11 and c.12, respectively. ECCN 5A991 is also amended by revising the phrase ''5A001'' to read ''5A991'' in Notes 1

and 2 to paragraph b.7 and in the Note to paragraph c.9.

(9) ECCN 5B001 is amended by revising the phrase ''employing coherent transmission'' to read ''employing coherent optical transmission'' in paragraph b.2.c. This corrects an inadvertent omission and is consistent with the changes agreed to and implemented by the Wassenaar Arrangement.

(10) ECCN 5D001 is amended by adding the word ''*or*'' at the end of paragraph d.2.a and removing the word ''*or*'' at the end of paragraph d.4.b. This corrects an inadvertent omission and error and is consistent with the changes agreed to and implemented by the Wassenaar Arrangement.

(11) ECCN 5E001 is amended by adding the word ''production'' in paragraph c and removing the word ''production'' in the notes to paragraph c.2.e and c.4.b. This corrects an inadvertent omission and errors and is consistent with the changes agreed to and implemented by the Wassenaar Arrangement.

(12) ECCN 5E991 is amended by revising the entry heading by adding ''and other 'technologies' as follows'' and by revising the List of Items Controlled section to include paragraphs a.1 and a.2 for 'technology' for the processing and application of coatings to optical fiber specially designed to make it suitable for underwater use and ''technology'' for the ''development'' of equipment employing ''Synchronous Digital Hierarchy'' (''SDH'') or ''Synchronous Optical Network'' (''SONET'') techniques. These technologies were removed from ECCN 5E001 in the July 23 rule as they are no longer controlled for national security reasons, consistent with the changes agreed to and implemented by the Wassenaar Arrangement. However, anti-terrorism controls for these technologies should have been retained under ECCN 5E991. This rule corrects this inadvertent omission.

(13) ECCN 6A003 is amended by revising the phrase ''time-delay-and integration'' to read ''time-delay-and-integration'' in the note to paragraph b.4. This corrects a typographical error and is consistent with the changes agreed to and implemented by the Wassenaar Arrangement.

Although the Export Administration Act (EAA) expired on August 20, 1994, the President invoked the International Emergency Economic Powers Act and continued in effect, the Export Administration Regulations and, to the extent permitted by law, the provisions of the EAA in Executive Order 12924 of August 19, 1994, as extended by the President's notices of August 15, 1995 (60 FR 42767), August 14, 1996 (61 FR 42527), August 13, 1997 (62 FR 43629), August 13, 1998 (63 FR 44121), and August 13, 1999 (64 FR 44101).

Rulemaking Requirements

1. This final rule has been determined to be not significant for purposes of E.O. 12866.

2. Notwithstanding any other provision of law, no person is required to, nor shall any person be subject to a penalty for failure to comply with a collection of information, subject to the Paperwork Reduction Act (PRA), unless that collection of information displays a currently valid OMB Control Number. This rule involves collection of information approved by the Office of Management and Budget under control numbers 0694–0106 and 0694–0088. This clarifies that the July 23, 1999 rule (64 FR 40106) referenced an incorrect collection of information number, 0694–0086, and instead should have referenced collection number 0694–0106.

3. This rule does not contain policies with Federalism implications sufficient to warrant preparation of a Federalism assessment under Executive Order 13132.

4. The provisions of the Administrative Procedure Act (5 U.S.C. 553) requiring notice of proposed rulemaking, the opportunity for public participation, and a delay in effective date, are inapplicable because this regulation involves a military and foreign affairs function of the United States (5 U.S.C. 553(a)(1)). Further, no other law requires that a notice of proposed rulemaking and an opportunity for public comment be given for this rule. Because a notice of proposed rulemaking and an opportunity for public comment are not required to be given for this rule under the Administrative Procedure Act or by any other law, the analytical requirements of the Regulatory Flexibility Act (5 U.S.C. 601 *et seq.*) are not applicable. Accordingly, this rule is issued in final form. However, comments from the public are always welcome. Comments should be submitted to Kirsten Mortimer, Regulatory Policy Division, Office of Exporter Services, Bureau of Export Administration, Department of Commerce, P.O. Box 273, Washington, DC 20044.

List of Subjects

15 CFR Parts 742 and 772

Exports, Foreign trade.

15 CFR Part 743

Administrative practice and procedure, Exports, Foreign trade, Reporting and recordkeeping requirements.

15 CFR Part 746

Embargoes, Exports, Foreign Trade, Reporting and recordkeeping requirements.

15 CFR Part 774

Exports, Foreign trade, Reporting and recordkeeping requirements.

Accordingly, parts 742, 743, 746, 772 and 774 of the Export Administration Regulations (15 CFR parts 730–799) are amended as follows:

1. The authority citation for 15 CFR Part 742 is revised to read as follows:

Authority: 50 U.S.C. app. 2401 *et seq.*; 50 U.S.C. 1701 *et seq.*; 18 U.S.C. 2510 *et seq.*; 22 U.S.C. 3201 *et seq.*; 42 U.S.C. 2139a; E.O. 12058, 43 FR 20947, 3 CFR, 1978 Comp., p. 179; E.O. 12851, 58 FR 33181, 3 CFR, 1993 Comp., p. 608; E.O. 12924, 59 FR 43437, 3 CFR, 1994 Comp., p. 917; E.O. 12938, 59 FR 59099, 3 CFR, 1994 Comp., p. 950; E.O. 13026, 61 FR 58767, 3 CFR, 1996 Comp., p. 228; Notice of November 12, 1998, 63 FR 63589, 3 CFR, 1998 Comp., p. 305; Notice of August 10, 1999, 64 FR 44101, 3 CFR, 1999 Comp., p. 302.

2. The authority citation for 15 CFR part 743 is revised to read as follows:

Authority: 50 U.S.C. app. 2401 *et seq;* 50 U.S.C. 1701 et seq; E.O. 12924, 59 FR 43437, 3 CFR, 1994 Comp., p. 917; Notice of August 10, 1999, 64 FR 44101, 3 CFR, 1999 Comp., p. 302.

3. The authority citation for 15 CFR part 746 is revised to read as follows:

Authority: 50 U.S.C. app. 2401 *et seq.*; 50 U.S.C. 1701 *et seq.*; 22 U.S.C. 287c; 22 U.S.C. 6004; E.O. 12854, 58 FR 36587, 3 CFR 1993 Comp., p. 614; E.O. 12918, 59 FR 28205, 3 CFR, 1994 Comp., p. 899; E.O. 12924, 59 FR 43437, 3 CFR, 1994 Comp., p.917; E.O. 13088, 63 FR 32109, 3 CFR, 1998 Comp., p. 191; E.O. 13121 of April 30, 1999, 64 FR 24021 (May 5, 1999); Notice of August 10, 1999, 64 FR 44101, 3 CFR, 1999 Comp., p. 302.

4. The authority citation for part 772 is revised to read as follows:

Authority: 50 U.S.C. app. 2401 *et seq.*; 50 U.S.C. 1701 *et seq.*; E.O. 12924, 59 FR 43437, 3 CFR, 1994 Comp., p. 917; E.O. 13026, 61 FR 58767, 3 CFR, 1996 Comp., p. 228; Notice of August 10, 1999, 64 FR 44101, 3 CFR, 1999 Comp., p. 302.

5. The authority citation for part 774 is revised to read as follows:

Authority: 50 U.S.C. app. 2401 *et seq.*; 50 U.S.C. 1701 *et seq.*; 10 U.S.C. 7420; 10 U.S.C. 7430(e); 18 U.S.C. 2510 *et seq.*; 22 U.S.C. 287c, 22 U.S.C. 3201 *et seq.*, 22 U.S.C. 6004; 30 U.S.C. 185(s), 185(u); 42 U.S.C. 2139a; 42

U.S.C. 6212; 43 U.S.C. 1354; 46 U.S.C. app. 466c; 50 U.S.C. app. 5; E.O. 12924, 59 FR 43437, 3 CFR, 1994 Comp., p. 917; E.O. 13026, 61 FR 58767, 3 CFR, 1996 Comp., p. 228; Notice of August 10, 1999, 64 FR 44101, 3 CFR, 1999 Comp., p. 302.

PART 742—[AMENDED]

§ 742.8 [Amended]

6. § 742.8 is amended by revising ''5A991.f'' in paragraph (a)(2), to read ''5A991.g''.

§ 742.10 [Amended]

7. § 742.10 is amended by revising ''5A991.f'' in paragraph (a)(2), to read ''5A991.g''.

Supplement to 742 [Amended]

8. Supplement No. 2 to part 742 is amended by revising the phrase ''ECCNs 5A001.c and 5A991.c.1'' in the introductory text of paragraph (c)(29) to read ''ECCN 5A991.c''.

PART 743—[AMENDED]

§ 743.1 [Amended]

9. § 743.1(c)(1)(v) is amended two places by revising ''5A001.b.8'', to read ''5A001.b.3''.

PART 746—[AMENDED]

§ 746.7 [Amended]

10. § 746.7 is amended by revising, ''5A991.f'' in paragraph (a)(2)(ii), to read ''5A991.g''.

PART 772—[AMENDED]

11. Part 772 is amended by revising the phrase ''with ISO/DIS 230/2'' to read ''with ISO/DIS 230/2 (1988)'' in the definition for ''positioning accuracy''.

PART 774—[AMENDED]

Supplement No. 1 to Part 774—The Commere Control List

12. In Supplement No. 1 to part 774 (the Commerce Control List), Category 2—Materials Processing, at the beginning of Category 2B (Test, Inspection and Production Equipment), note 5 in ''Notes for Category 2B'' is amended by revising the phrase ''in accordance with ISO 230/2'' to read ''in accordance with ISO 230/2 (1988)''.

13. In Supplement No. 1 to part 774 (the Commerce Control List), Category 3—Electronics, ECCN 3B991 is amended by revising the List of Items Controlled section, as follows:

3B991 Equipment not controlled by 3B001 for the manufacture of electronic components and materials, and specially designed components and accessories therefor.

* * * * *

List of Items Controlled

Unit: Equipment in number.
Related Controls: N/A.
Related Definitions: N/A.
Items:

a. Equipment specially designed for the manufacture of electron tubes, optical elements and specially designed components therefor controlled by 3A001 or 3A991;

b. Equipment specially designed for the manufacture of semiconductor devices, integrated circuits and ''assemblies'', as follows, and systems incorporating or having the characteristics of such equipment:

Note: 3B991.b also controls equipment used or modified for use in the manufacture of other devices, such as imaging devices, electro-optical devices, acoustic-wave devices.

b.1. Equipment for the processing of materials for the manufacture of devices and components as specified in the heading of 3B991.b, as follows:

Note: 3B991 does not control quartz furnace tubes, furnace liners, paddles, boats (except specially designed caged boats), bubblers, cassettes or crucibles specially designed for the processing equipment controlled by 3B991.b.1.

b.1.a. Equipment for producing polycrystalline silicon and materials controlled by 3C001;

b.1.b. Equipment specially designed for purifying or processing III/V and II/VI semiconductor materials controlled by 3C001, 3C002, 3C003, or 3C004, except crystal pullers, for which see 3B991.b.1.c below;

b.1.c. Crystal pullers and furnaces, as follows:

Note: 3B991.b.1.c does not control diffusion and oxidation furnaces.

b.1.c.1. Annealing or recrystallizing equipment other than constant temperature furnaces employing high rates of energy transfer capable of processing wafers at a rate exceeding 0.005 m^2 per minute;

b.1.c.2. ''Stored program controlled'' crystal pullers having any of the following characteristics:

b.1.c.2.a. Rechargeable without replacing the crucible container;

b.1.c.2.b. Capable of operation at pressures above 2.5×10^5 Pa; *or* b.1.c.2.c. Capable of pulling crystals of a diameter exceeding 100 mm;

b.1.d. ''Stored program controlled'' equipment for epitaxial growth having any of the following characteristics:

b.1.d.1. Capable of producing a layer thickness uniformity across the wafer of equal to or better than ±3.5%;

b.1.d.2. Rotation of individual wafers during processing; *or*

b.1.e. Molecular beam epitaxial growth equipment;

b.1.f. Magnetically enhanced ''sputtering'' equipment with specially designed integral load locks capable of transferring wafers in an isolated vacuum environment;

b.1.g. Equipment specially designed for ion implantation, ion-enhanced or photo-enhanced diffusion, having any of the following characteristics:

b.1.g.1. Patterning capability;

b.1.g.2. Beam energy (accelerating voltage) exceeding 200 keV;

b.1.g.3 Optimized to operate at a beam energy (accelerating voltage) of less than 10 keV; *or*

b.1.g.4. Capable of high energy oxygen implant into a heated ''substrate'';

b.1.h. ''Stored program controlled'' equipment for the selective removal (etching) by means of anisotropic dry methods (*e.g.,* plasma), as follows:

b.1.h.1. Batch types having either of the following:

b.1.h.1.a. End-point detection, other than optical emission spectroscopy types; *or*

b.1.h.1.b. Reactor operational (etching) pressure of 26.66 Pa or less;

b.1.h.2. Single wafer types having any of the following:

b.1.h.2.a. End-point detection, other than optical emission spectroscopy types;

b.1.h.2.b. Reactor operational (etching) pressure of 26.66 Pa or less; *or*

b.1.h.2.c. Cassette-to-cassette and load locks wafer handling;

Notes: 1. ''Batch types'' refers to machines not specially desired for production processing of single wafers. Such machines can process two or more wafers simultaneously with common process parameters, *e.g.,* RF power, temperature, etch gas species, flow rates.

2. ''Single wafer types'' refers to machines specially designed for production processing of single wafers. These machines may use automatic wafer handling techniques to load a single wafer into the equipment for processing. The definition includes equipment that can load and process several wafers but where the etching parameters, *e.g.,* RF power or end point, can be independently determined for each individual wafer.

b.1.i. ''Chemical vapor deposition'' (CVD) equipment, *e.g.,* plasma-enhanced CVD (PECVD) or photo-enhanced CVD, for semiconductor device manufacturing, having either of the following capabilities, for deposition of oxides, nitrides, metals or polysilicon:

b.1.i.1. ''Chemical vapor deposition'' equipment operating below 10^5 Pa; *or*

b.1.i.2. PECVD equipment operating either below 60 Pa (450 millitorr) or having automatic cassette-to-cassette and load lock wafer handling;

Note: 3B991.b.1.i does not control low pressure ''chemical vapor deposition'' (LPCVD) systems or reactive ''sputtering'' equipment.

b.1.j. Electron beam systems specially designed or modified for mask making or semiconductor device processing having any of the following characteristics:

b.1.j.1. Electrostatic beam deflection;

b.1.j.2. Shaped, non-Gaussian beam profile;

b.1.j.3. Digital-to-analog conversion rate exceeding 3 MHz;

b.1.j.4. Digital-to-analog conversion accuracy exceeding 12 bit; *or*

b.1.j.5. Target-to-beam position feedback control precision of 1 micrometer or finer;

Note: 3B991.b.1.j does not control electron beam deposition systems or general purpose scanning electron microscopes.

b.1.k. Surface finishing equipment for the processing of semiconductor wafers as follows:

b.1.k.1. Specially designed equipment for backside processing of wafers thinner than 100 micrometer and the subsequent separation thereof; *or*

b.1.k.2. Specially designed equipment for achieving a surface roughness of the active surface of a processed wafer with a two-sigma value of 2 micrometer or less, total indicator reading (TIR);

Note: 3B991.b.1.k does not control single-side lapping and polishing equipment for wafer surface finishing.

b.1.l. Interconnection equipment which includes common single or multiple vacuum chambers specially designed to permit the integration of any equipment controlled by 3B991 into a complete system;

b.1.m. ''Stored program controlled'' equipment using ''lasers'' for the repair or trimming of ''monolithic integrated circuits'' with either of the following characteristics:

b.1.m.1. Positioning accuracy less than ± 1 micrometer; *or*

b.1.m.2. Spot size (kerf width) less than 3 micrometer.

b.2. Masks, mask ''substrates'', mask-making equipment and image transfer equipment for the manufacture of devices and components as specified in the heading of 3B991, as follows:

Note: The term ''masks'' refers to those used in electron beam lithography, X-ray lithography, and ultraviolet lithography, as well as the usual ultraviolet and visible photo-lithography.

b.2.a. Finished masks, reticles and designs therefor, except:

b.2.a.1. Finished masks or reticles for the production of unembargoed integrated circuits; *or*

b.2.a.2. Masks or reticles, having both of the following characteristics:

b.2.a.2.a. Their design is based on geometries of 2.5 micrometer or more; *and*

b.2.a.2.b. The design does not include special features to alter the intended use by means of production equipment or ''software'';

b.2.b. Mask ''substrates'' as follows:

b.2.b.1. Hard surface (*e.g.,* chromium, silicon, molybdenum) coated ''substrates'' (e.g., glass, quartz, sapphire) for the preparation of masks having dimensions exceeding 125 mm x 125 mm; *or*

b.2.b.2. ''Substrates'' specially designed for X-ray masks;

b.2.c. Equipment, other than general purpose computers, specially designed for computer aided design (CAD) of semiconductor devices or integrated circuits;

b.2.d. Equipment or machines, as follows, for mask or reticle fabrication:

b.2.d.1. Photo-optical step and repeat cameras capable of producing arrays larger than 100 mm x 100 mm, or capable of producing a single exposure larger than 6 mm x 6 mm in the image (i.e., focal) plane, or capable of producing line widths of less than 2.5 micrometer in the photoresist on the ''substrate'';

b.2.d.2. Mask or reticle fabrication equipment using ion or ''laser'' beam lithography capable of producing line widths of less than 2.5 micrometer; *or*

b.2.d.3. Equipment or holders for altering masks or reticles or adding pellicles to remove defects;

Note: 3B991.b.2.d.1 and b.2.d.2 do not control mask fabrication equipment using photo-optical methods which was either commercially available before the 1st January, 1980, or has a performance no better than such equipment.

b.2.e. ''Stored program controlled'' equipment for the inspection of masks, reticles or pellicles with:

b.2.e.1. A resolution of 0.25 micrometer or finer; *and*

b.2.e.2. A precision of 0.75 micrometer or finer over a distance in one or two coordinates of 63.5 mm or more;

Note: 3B991.b.2.e does not control general purpose scanning electron microscopes except when specially designed and instrumented for automatic pattern inspection.

b.2.f. Align and expose equipment for wafer production using photo-optical or X-ray methods, including both projection image transfer equipment and step and repeat (direct step on wafer) or step and scan (scanner) equipment, capable of performing any of the following functions:

Note: 3B991.b.2.f does not control photo-optical contact and proximity mask align and expose equipment or contact image transfer equipment.

b.2.f.1. Production of a pattern size of less than 2.5 micrometer;

b.2.f.2. Alignment with a precision finer than ±0.25 micrometer (3 sigma);

b.2.f.3. Machine-to-machine overlay no better than +0.3 micrometer; or

b.2.f.4. A light source wavelength shorter than 400 nm;

b.2.g. Electron beam, ion beam or X-ray equipment for projection image transfer capable of producing patterns less than 2.5 micrometer;

Note: For focussed, deflected-beam systems (direct write systems), see 3B991.b.1.j or b.10.

b.2.h. Equipment using ''lasers'' for direct write on wafers capable of producing patterns less than 2.5 micrometer.

b.3. Equipment for the assembly of integrated circuits, as follows:

b.3.a. ''Stored program controlled'' die bonders having all of the following characteristics:

b.3.a.1. Specially designed for ''hybrid integrated circuits'';

b.3.a.2. X–Y stage positioning travel exceeding 37.5 x 37.5 mm; *and*

b.3.a.3. Placement accuracy in the X–Y plane of finer than +10 micrometer;

b.3.b. ''Stored program controlled'' equipment for producing multiple bonds in a single operation (*e.g.,* beam lead bonders, chip carrier bonders, tape bonders);

b.3.c. Semi-automatic or automatic hot cap sealers, in which the cap is heated locally to a higher temperature than the body of the package, specially designed for ceramic microcircuit packages controlled by 3A001 and that have a throughput equal to or more than one package per minute.

Note: 3B991.b.3 does not control general purpose resistance type spot welders.

b.4. Filters for clean rooms capable of providing an air environment of 10 or less particles of 0.3 micrometer or smaller per 0.02832 m_3 and filter materials therefor.

14. In Supplement No. 1 to part 774 (the Commerce Control List), Category 5—Telecommunication and Information Security, Part I—Telecommunications is amended:

a. By revising the License Exceptions section for ECCN 5A001; and

b. By revising the List of Items Controlled section for ECCNs 5A991, 5B001, 5D001, and 5E001; and

c. By revising the entry heading and List of Items Controlled section for ECCN 5E991, as follows:

5A001 Telecommunications systems, equipment, and components.

* * * * *

License Exceptions

LVS: N/A for 5A001.a and b.4
$5000 for 5A001.b.1, b.2, b.3, b.5, and .d
$3000 for 5A001.c
GBS: Yes, except 5A001.a and b.4
CIV: Yes, except 5A001.a, b.3 and b.4

* * * * *

5A991 Telecommunication equipment, not controlled by 5A001.

* * * * *

List of Items Controlled

Unit: $ value.
Related Controls: N/A.
Related Definitions: N/A.
Items:

a. Any type of telecommunications equipment, not controlled by 5A001.a, specially designed to operate outside the temperature range from 219 K (− 54 °C) to 397 K (124 °C).

b. Telecommunication transmission equipment and systems, and specially designed components and accessories therefor, having any of the following characteristics, functions or features:

Note: Telecommunication transmission equipment:

a. Categorized as follows, or combinations thereof:

1. Radio equipment (*e.g.,* transmitters, receivers and transceivers);
2. Line terminating equipment;
3. Intermediate amplifier equipment;
4. Repeater equipment;
5. Regenerator equipment;
6. Translation encoders (transcoders);
7. Multiplex equipment (statistical mutiplex included);
8. Modulators/demodulators (modems);
9. Transmultiplex equipment (see CCITT Rec. G701);

10. ''Stored program controlled'' digital crossconnection equipment;
11. ''Gateways'' and bridges;
12. ''Media access units''; *and*
b. Designed for use in single or multi-channel communication via any of the following:
1. Wire (line);
2. Coaxial cable;
3. Optical fiber cable;
4. Electromagnetic radiation; *or*
5. Underwater acoustic wave propagation.
b.1. Employing digital techniques, including digital processing of analog signals, and designed to operate at a ''digital transfer rate'' at the highest multiplex level exceeding 45 Mbit/s or a ''total digital transfer rate'' exceeding 90 Mbit/s;

Note: 5A991.b.1 does not control equipment specially designed to be integrated and operated in any satellite system for civil use.

b.2. Modems using the ''bandwidth of one voice channel'' with a ''data signalling rate'' exceeding 9,600 bits per second;
b.3. Being ''stored program controlled'' digital cross connect equipment with ''digital transfer rate'' exceeding 8.5 Mbit/s per port.
b.4. Being equipment containing any of the following:
b.4.a. ''Network access controllers'' and their related common medium having a ''digital transfer rate'' exceeding 33 Mbit/s; *or*
b.4.b. ''Communication channel controllers'' with a digital output having a ''data signalling rate'' exceeding 64,000 bit/s per channel;

Note: If any uncontrolled equipment contains a ''network access controller'', it cannot have any type of telecommunications interface, except those described in, but not controlled by 5A991.b.4.

b.5. Employing a ''laser'' and having any of the following characteristics:
b.5.a. A transmission wavelength exceeding 1,000 nm; *or*
b.5.b. Employing analog techniques and having a bandwidth exceeding 45 MHz;

Note: 5A991.b.5.b does not control commercial TV systems.

b.5.c. Employing coherent optical transmission or coherent optical detection techniques (also called optical heterodyne or homodyne techniques);
b.5.d. Employing wavelength division multiplexing techniques; *or*
b.5.e. Performing ''optical amplification'';
b.6. Radio equipment operating at input or output frequencies exceeding:
b.6.1. 31 GHz for satellite-earth station applications; *or*
b.6.2. 26.5 GHz for other applications;

Note: 5A991.b.6 does not control equipment for civil use when conforming with an International Telecommunications Union (ITU) allocated band between 26.5 GHz and 31 GHz.

b.7. Being radio equipment employing any of the following:
b.7.a. Quadrature-amplitude-modulation (QAM) techniques above level 4 if the ''total digital transfer rate'' exceeds 8.5 Mbit/s;
b.7.b. QAM techniques above level 16 if the ''total digital transfer rate'' is equal to or less than 8.5 Mbit/s; *or*
b.7.c. Other digital modulation techniques and having a ''spectral efficiency'' exceeding 3 bit/sec/Hz;

Notes: 1. 5A991.b.7 does not control equipment specially designed to be integrated and operated in any satellite system for civil use.
2. 5A991.b.7 does not control radio relay equipment for operation in an ITU allocated band:
a. Having any of the following:
a.1. Not exceeding 960 MHz; *or*
a.2. With a ''total digital transfer rate'' not exceeding 8.5 Mbit/s; *and*

b. Having a ''spectral efficiency'' not exceeding 4 bit/sec/Hz.
b.8. Providing functions of digital ''signal processing'' as follows:
b.8.a. Voice coding at rates less than 2,400 bit/s;
b.8.b. Employing circuitry that incorporates ''user-accessible programmability'' of digital ''signal processing'' circuits exceeding the limits of 4A003.b.
c. ''Stored program controlled'' switching equipment and related signalling systems, having any of the following characteristics, functions or features, and specially designed components and accessories therefor:

Note: Statistical multiplexers with digital input and digital output which provide switching are treated as ''stored program controlled'' switches.

c.1. ''Data (message) switching'' equipment or systems designed for ''packet-mode operation'' and assemblies and components therefor, n.e.s.
c.2. Containing ''Integrated Services Digital Network'' (ISDN) functions and having any of the following:
c.2.a. Switch-terminal (*e.g.,* subscriber line) interfaces with a ''digital transfer rate'' at the highest multiplex level exceeding 192,000 bit/s, including the associated signalling channel (*e.g.,* 2B+D); *or*
c.2.b. The capability that a signalling message received by a switch on a given channel that is related to a communication on another channel may be passed through to another switch.

Note: 5A991.c does not preclude the evaluation and appropriate actions taken by the receiving switch or unrelated user message traffic on a D channel of ISDN.

c.3. Routing or switching of ''datagram'' packets;
c.4. Routing or switching of ''fast select'' packets;

Note: The restrictions in 5A991.c.3 and c.4 do not apply to networks restricted to using only ''network access controllers'' or to ''network access controllers'' themselves.

c.5. Multi-level priority and pre-emption for circuit switching;

Note: 5A991.c.5 does not control single-level call preemption.

c.6. Designed for automatic hand-off of cellular radio calls to other cellular switches or automatic connection to a centralized subscriber data base common to more than one switch;
c.7. Containing ''stored program controlled'' digital crossconnect equipment with ''digital transfer rate'' exceeding 8.5 Mbit/s per port.
c.8. ''Common channel signalling'' operating in either non-associated or quasi-associated mode of operation;
c.9. ''Dynamic adaptive routing'';

Note: 5A991.c.10 does not control packet switches or routers with ports or lines not exceeding the limits in 5A991.c.10.

c.10. Being packet switches, circuit switches and routers with ports or lines exceeding any of the following:
c.10.a. A ''data signalling rate'' of 64,000 bit/s per channel for a ''communications channel controller''; *or*

Note: 5A991.c.10.a does not control multiplex composite links composed only of communication channels not individually controlled by 5A991.b.1.

c.10.b. A ''digital transfer rate'' of 33 Mbit/s for a ''network access controller'' and related common media;
c.11. ''Optical switching'';
c.12. Employing ''Asynchronous Transfer Mode (''ATM'') techniques.
d. Optical fibers and optical fiber cables of more than 50 m in length designed for single mode operation;
e. Centralized network control having all of the following characteristics:
e.1. Receives data from the nodes; *and*
e.2. Process these data in order to provide control of traffic not requiring operator decisions, and thereby performing ''dynamic adaptive routing'';

Note: 5A991.e does not preclude control of traffic as a function of predictable statistical traffic conditions.

f. Phased array antennae, operating above 10.5 GHz, containing active elements and distributed components, and designed to permit electronic control of beam shaping and pointing, except for landing systems with instruments meeting International Civil Aviation Organization (ICAO) standards (microwave landing systems (MLS)).
g. Mobile communications equipment, n.e.s., and assemblies and components therefor; *or*
h. Radio relay communications equipment designed for use at frequencies equal to or exceeding 19.7 GHz and assemblies and components therefor, n.e.s.

5B001—Telecommunication test, inspection and production equipment, as follows (See List of Items Controlled).

* * * * *

List of Items Controlled

Unit: Equipment in number; parts and accessories in $ value.
Related Controls: See also 5B991.
Related Definition: N/A.
Items:
a. Equipment and specially designed components or accessories therefor, specially designed for the ''development'', ''production'' or ''use'' of equipment, functions or features controlled by 5A001, 5D001 or 5E001.

Note: 5B001.a. does not control optical fiber characterization equipment not using semiconductor ''lasers''.

b. Equipment and specially designed components or accessories therefor, specially designed for the ''development'' of any of the following telecommunication transmission or ''stored program controlled'' switching equipment:

b.1. Equipment employing digital techniques, including ''Asynchronous Transfer Mode'' (''ATM''), designed to operate at a ''total digital transfer rate'' exceeding 1.5 Gbit/s;

b.2. Equipment employing a ''laser'' and having any of the following:

b.2.a. A transmission wavelength exceeding 1750 nm;

b.2.b. Performing ''optical amplification'';

b.2.c. Employing coherent optical transmission or coherent optical detection techniques (also called optical heterodyne or homodyne techniques); *or*

b.2.d. Employing analogue techniques and having a bandwidth exceeding 2.5 GHz;

Note: 5B001.b.2.d. does not include equipment specially designed for the ''development'' of commercial TV systems.

b.3. Equipment employing ''optical switching'';

b.4. Radio equipment having any of the following:

b.4.a. Quadrature-amplitude-modulation (QAM) techniques above level 128; *or*

b.4.b. Operating at input or output frequencies exceeding 31 GHz; *or*

Note: 5B001.b.4.b. does not include equipment specially designed for the ''development'' of equipment designed or modified for operation in any ITU allocated band.

b.5. Equipment employing ''common channel signalling'' operating in either the non-associated mode of operation.

5D001 ''Software'', as described in the List of Items Controlled.

* * * * *

List of Items Controlled

Unit: $ value.

Related Controls: See also 5D991.

Related Definitions: N/A.

Items:

a. ''Software'' specially designed or modified for the ''development'', ''production'' or ''use'' of equipment, functions or features controlled by 5A001 or 5B001.

b. ''Software'' specially designed or modified to support ''technology'' controlled by 5E001.

c. Specific ''software'' as follows:

c.1. ''Software'' specially designed or modified to provide characteristics, functions or features of equipment controlled by 5A001 or 5B001;

c.2. ''Software'' which provides the capability of recovering ''source code'' of telecommunications ''software'' controlled by 5D001;

c.3. ''Software'', other than in machine-executable form, specially designed for ''dynamic adaptive routing''.

d. ''Software'' specially designed or modified for the ''development'' of any of the following telecommunication transmission or ''stored program controlled'' switching equipment:

d.1. Equipment employing digital techniques, including ''Asynchronous Transfer Mode'' (''ATM''), designed to operate at a ''total digital transfer rate'' exceeding 1.5 Gbit/s;

d.2. Equipment employing a ''laser'' and having any of the following:

d.2.a. A transmission wavelength exceeding 1750 nm; *or*

d.2.b. Employing analogue techniques and having a bandwidth exceeding 2.5 GHz;

Note: 5D001.d.2.b does not include ''software'' specially designed or modified for the ''development'' of commercial TV systems.

d.3. Equipment employing ''optical switching''; *or*

d.4. Radio equipment having any of the following:

d.4.a. Quadrature-amplitude-modulation (QAM) techniques above level 128; *or*

d.4.b. Operating at input or output frequencies exceeding 31 GHz.

Note: 5D001.d.4.b does not include ''software'' specially designed or modified for the ''development'' of equipment designed or modified for operation in any ITU allocated band.

5E001 ''Technology'', (see List of Items Controlled).

* * * * *

List of Items Controlled

Unit: $ value.

Related Controls: See also 5E101 and 5E991.

Related Definitions: N/A.

Items:

a. ''Technology'' according to the General Technology Note for the ''development'', ''production'' or ''use'' (excluding operation) of equipment, functions or features or ''software'' controlled by 5A001, 5B001 or 5D001.

b. Specific ''technologies'', as follows:

b.1. ''Required'' ''technology'' for the ''development'' or ''production'' of telecommunications equipment specially designed to be used on board satellites;

b.2. ''Technology'' for the ''development'' or ''use'' of ''laser'' communication techniques with the capability of automatically acquiring and tracking signals and maintaining communications through exoatmosphere or sub-surface (water) media;

b.3. ''Technology'' for the ''development'' of digital cellular radio systems;

b.4. ''Technology'' for the ''development'' of ''spread spectrum'' or ''frequency agility'' (frequency hopping) techniques.

c. ''Technology'' according to the General Technology Note for the ''development'' or ''production'' of any of the following telecommunication transmission or ''stored program controlled'' switching equipment, functions or features:

c.1. Equipment employing digital techniques, including ''Asynchronous Transfer Mode'' (''ATM''), designed to operate at a ''total digital transfer rate'' exceeding 1.5 Gbit/s;

c.2. Equipment employing a ''laser'' and having any of the following:

c.2.a. A transmission wavelength exceeding 1750 nm;

c.2.b. Performing ''optical amplification'' using praseodymium-doped fluoride fiber amplifiers (PDFFA);

c.2.c. Employing coherent optical transmission or coherent optical detection techniques (also called optical heterodyne or homodyne techniques);

c.2.d. Employing wavelength division multiplexing techniques exceeding 8 optical carriers in a single optical window; *or*

c.2.e. Employing analogue techniques and having a bandwidth exceeding 2.5 GHz;

Note: 5E001.c.2.e does not include ''technology'' for the ''development'' of commercial TV systems.

c.3. Equipment employing ''optical switching''; *or*

c.4. Radio equipment having any of the following:

c.4.a. Quadrature-amplitude-modulation (QAM) techniques above level 128; *or*

c.4.b. Operating at input or output frequencies exceeding 31 Ghz; *or*

Note: 5E001.c.4.b does not include ''technology'' for the ''development'' of equipment designed or modified for operation in any ITU allocated band.

c.5. Equipment employing ''common channel signalling'' operating in either non-associated or quasi-associated mode of operation.

5E991 ''Technology'' for the ''Development'', ''Production'' or ''Use'' of Equipment Controlled by 5A991 or 5B991, or ''Software'' Controlled by 5D991, and Other ''Technologies'' as Follows (see List of Items Controlled)

* * * * *

List of Items Controlled

Unit: $ value.

Related Controls: N/A.

Related Definitions: N/A.

Items:

a. Specific ''technologies'' as follows:

a.1. ''Technology'' for the processing and application of coatings to optical fiber specially designed to make it suitable for underwater use;

a.2. ''Technology'' for the ''development'' of equipment employing ''Synchronous Digital Hierarchy'' (''SDH'') or ''Synchronous Optical Network''(''SONET'') techniques.

15. In Supplement No. 1 to part 774 (the Commerce Control List), Category 6—Sensors and Lasers, ECCN 6A003 is amended by revising the List of Items Controlled section, as follows:

6A003 Cameras

* * * * *

List of Items Controlled

Unit: Number.

Related Controls: See also 6A203. See 8A002.d and .e for cameras specially designed or modified for underwater use.

Related Definitions: N/A.

Items:

a. Instrumentation cameras, as follows:

a.1. High-speed cinema recording cameras using any film format from 8 mm to 16 mm inclusive, in which the film is continuously advanced throughout the recording period,

and that are capable of recording at framing rates exceeding 13,150 frames/s;

Note: 6A003.a.1 does not control cinema recording cameras designed for civil purposes.

a.2. Mechanical high speed cameras, in which the film does not move, capable of recording at rates exceeding 1,000,000 frames/s for the full framing height of 35 mm film, or at proportionately higher rates for lesser frame heights, or at proportionately lower rates for greater frame heights;

a.3. Mechanical or electronic streak cameras having writing speeds exceeding 10 mm/μs;

a.4. Electronic framing cameras having a speed exceeding 1,000,000 frames/s;

a.5. Electronic cameras, having all of the following:

a.5.a. An electronic shutter speed (gating capability) of less than 1 μs per full frame; and

a.5.b. A read out time allowing a framing rate of more than 125 full frames per second.

b. Imaging cameras, as follows:

Note: 6A003.b does not control television or video cameras specially designed for television broadcasting.

b.1. Video cameras incorporating solid state sensors, having any of the following:

b.1.a. More than 4×10^6 ''active pixels'' per solid state array for monochrome (black and white) cameras;

b.1.b. More than 4×10^6 ''active pixels'' per solid state array for color cameras incorporating three solid state arrays; *or*

b.1.c. More than 12×10^6 ''active pixels'' for solid state array color cameras incorporating one solid state array;

b.2. Scanning cameras and scanning camera systems, having all of the following:

b.2.a. Linear detector arrays with more than 8,192 elements per array; *and*

b.2.b. Mechanical scanning in one direction;

b.3. Imaging cameras incorporating image intensifier tubes having the characteristics listed in 6A002.a.2.a;

b.4. Imaging cameras incorporating ''focal plane arrays'' having the characteristics listed in 6A002.a.3.

Note: 6A003.b.4 does not control imaging cameras incorporating linear ''focal plane arrays'' with twelve elements or fewer, not employing time-delay-and-integration with the element, designed for any of the following:

a. Industrial or civilian intrusion alarm, traffic or industrial movement control or counting systems;

b. Industrial equipment used for inspection or monitoring of heat flows in buildings, equipment or industrial processes;

c. Industrial equipment used for inspection, sorting or analysis of the properties of materials;

d. Equipment specially designed for laboratory use; *or*

e. Medical equipment.

Dated: May 18, 2000.

R. Roger Majak,

Assistant Secretary for Export Administration.

[FR Doc. 00–13252 Filed 5–25–00; 8:45 am]

BILLING CODE 3510–33–P

SECURITIES AND EXCHANGE COMMISSION

17 CFR Part 232

[Release Nos. 33–7858; 34–42789; 35–27177; 39–2385; IC–24455]

RIN 3235–AG96

Adoption of Updated EDGAR Filer Manual

AGENCY: Securities and Exchange Commission.

ACTION: Final rule.

SUMMARY: The Commission is adopting revisions to the EDGAR Filer Manual and is providing for their incorporation by reference into the Code of Federal Regulations. In conjunction with the transition to the new capabilities made available in EDGAR Release 7.0, we will be redesignating the components of the Filer Manual into three parts: Volume I discusses the old (Legacy) EDGAR filing system; Volume II discusses modernized EDGAR and all its new features; and the N–SAR Supplement discusses the filing of N–SAR documents. Today, we are adopting new provisions to the Filer Manual that describe the modernized EDGAR system implemented in EDGAR Release 7.0. These new provisions are designated as Volume II of the EDGAR Manual.

EFFECTIVE DATE: May 30, 2000. The revisions to the EDGAR Filer Manual (Release 7.0), contained in Volume II—Modernized EDGARLink, will be effective on May 30, 2000. The incorporation by reference of the EDGAR Filer Manual is approved by the Director of the Federal Register as of May 30, 2000.

FOR FURTHER INFORMATION CONTACT: In the Office of Information Technology, Richard Heroux at (202) 942–8800; for questions concerning investment company filings, Ruth Armfield Sanders, Senior Special Counsel, or Shaswat K. Das, Attorney, Division of Investment Management, at (202) 942–0978; and for questions concerning Corporation Finance company filings, Herbert Scholl, Office Chief, EDGAR and Information Analysis, Division of Corporation Finance, at (202) 942–2930.

SUPPLEMENTARY INFORMATION: Today we are adopting a new Volume II of the EDGAR Filer Manual (''Filer Manual''), which describes the technical formatting requirements for the preparation and submission of electronic filings through the Electronic Data Gathering, Analysis, and Retrieval (EDGAR) system.[1] Volume II describes the requirements for filing using the new EDGARLink.[2]

Previously, the EDGAR Manual was composed of two parts. With the addition of Volume II, the EDGAR Manual will consist of three parts because we will be maintaining two separate software applications for the preparation and transmission of filings until at least November 1, 2000. We are doing this to provide filers abundant time to transition to the new modernized system.

Volume II of the Manual contains all the new technical specifications for filers to submit filings using the new modernized EDGAR system available in Release 7.0. The specifications include features that will be available for the first time to filers using the new EDGARLink software, such as expanded hyperlinks, graphics, and filing over the Internet.

We also plan shortly to adopt revised versions of the remaining parts of the Manual. These revisions will reflect the limited changes effected by EDGAR Release 7.0 to the Legacy EDGAR systems and Form N–SAR filing. Until we do, the provisions of EDGAR Manual Release 6.75 and N–SAR Supplement for Release 6.1 will continue to apply to filers using the Legacy EDGAR system and to filers filing Form N–SAR.

Filers must comply with the applicable provisions of the Filer Manual in order to assure the timely acceptance and processing of filings made in electronic format.[3] Filers should consult the Filer Manual in conjunction with our rules governing mandated electronic filing when preparing documents for electronic submission.[4]

[1] We originally adopted the Filer Manual on April 1, 1993, with an effective date of April 26, 1993. Release No. 33–6986 (Apr. 1, 1993) (58 FR 18638). We implemented the most recent update to the Filer Manual on January 24, 2000. *See* Release No. 33–7789 (January 20, 2000) (65 FR 3123).

[2] This is the Filer Assistance software we provide filers filing on the EDGAR system.

[3] *See* Rule 301 Regulation S–T (17 CFR 232.301).

[4] *See* Release Nos. 33–6977 (Feb. 23, 1993) (58 FR 14628), IC–19284 (Feb. 23, 1993) (58 FR 14848), and 35–25746 (Feb. 23, 1993) (58 FR 14999), and 33–6980 (Feb. 23, 1993) (58 FR 15009) in which we comprehensively discuss the rules we adopted to govern mandated electronic filing. *See also* Release No. 33–7122 (Dec. 19, 1994) (59 FR 67752), in which we made the EDGAR rules final and applicable to all domestic registrants; Release No. 33–7427 (July 1, 1997) (62 FR 36450), in which we

Continued

The purpose of EDGAR Release 7.0 is to implement the next stage of modernization that filers may begin using on May 30, 2000. The modernized version of EDGAR includes a number of changes: An easier to use EDGARLink for creating and submitting filings to the EDGAR system; graphics and image files in HTML filings; expanded use of hyperlinks in HTML filings; the addition of the Internet as a means of transmission; an update to use of magnetic tape cartridges and the removal of 9 track tapes when support of the Legacy EDGAR system ends; and the elimination of diskette filing in July 2000. The new EDGARLink will be available for download from the EDGAR Filing website; it will not be distributed by diskette.

Legacy EDGARLink is a DOS-based system. We believe the modernized EDGARLink will be easier to use under a Windows operating system, the system most filers use. The new EDGARLink will enable filers to transmit their filings to EDGAR using the Internet. As with the current EDGARLink, the new EDGARLink also assists filers with building the header, attaching documents to the header, checking for errors and transmitting documents to us. The new EDGARLink does not use the current tagging; instead, predefined templates are available for download through our EDGAR Filing web site. The new EDGARLink checks for errors so that filers can make corrections and increase the chance of acceptance by the system.

Filers must use the new EDGARLink if they wish to include graphics and expanded hyperlinks in their HTML documents. Filers using the old version of EDGARLink will not be able to take advantage of EDGAR's new features. Also, as of May 30th, filers using the Legacy EDGAR software system will be able to update company information, change their passwords or change their CIK confirmation codes only by submitting an amended Form ID.

Finally, we are amending Rule 301 of Regulation S–T to provide for the incorporation by reference into the Code of Federal Regulations the revisions to the Filer Manual reflected in Volume II. This incorporation by reference was approved by the Director of the Federal Register in accordance with 5 U.S.C. 552(a) and 1 CFR part 51. The revised Filer Manual and the amendments to Rule 301 will be effective on May 30, 2000.

You may obtain paper copies of the updated Filer Manual at the following address: Public Reference Room, U.S. Securities and Exchange Commission, 450 Fifth Street, NW., Washington DC. 20549–0102. We will post electronic format copies on the SEC's Web Site. The SEC's Web Site address for the Filer Manual is http://www.sec.gov/asec/ofis/filerman.htm. You may also obtain copies from Disclosure Incorporated, the paper and microfiche contractor for the Commission, at (800) 638–8241.

Since the Filer Manual relates solely to agency procedures or practice, publication for notice and comment is not required under the Administrative Procedure Act (APA).[5] It follows that the requirements of the Regulatory Flexibility Act[6] do not apply.

The effective date for the updated Filer Manual and the rule amendments is May 30, 2000. In accordance with the APA,[7] we find that there is good cause to establish an effective date less than 30 days after publication of these rules. The EDGAR system is scheduled to be upgraded to Release 7.0 on May 30, 2000. The Commission believes that it is necessary to coordinate the effectiveness of the updated Filer Manual with the scheduled system upgrade in order to minimize confusion to EDGAR filers.

Statutory Basis

We are adopting the amendments to Regulation S–T under sections 6, 7, 8, 10, and 19(a) of the Securities Act,[8] Sections 3, 12, 13, 14, 15, 23, and 35A of the Securities Exchange Act of 1934,[9] Section 20 of the Public Utility Holding Company Act of 1935,[10] Section 319 of the Trust Indenture Act of 1939,[11] and Sections 8, 30, 31, and 38 of the Investment Company Act.[12]

List of Subjects in 17 CFR Part 232

Incorporation by reference, Reporting and recordkeeping requirements, Securities.

Text of the Amendment

In accordance with the foregoing, Title 17, Chapter II of the Code of Federal Regulations is amended as follows:

PART 232—REGULATION S–T—GENERAL RULES AND REGULATIONS FOR ELECTRONIC FILINGS

1. The authority citation for part 232 continues to read as follows:

Authority: 15 U.S.C. 77f, 77g, 77h, 77j, 77s(a), 77sss(a), 78c(b), 78*l*, 78m, 78n, 78o(d), 78w(a), 78*ll*(d), 79t(a), 80a–8, 80a–29, 80a–30 and 80a–37.

2. Section 232.301 is revised to read as follows:

§ 232.301 EDGAR Filer Manual.

Filers must prepare electronic filings in the manner prescribed by the EDGAR Filer Manual, promulgated by the Commission, which sets out the technical formatting requirements for electronic submissions. For the period during which Legacy EDGAR will be available, prior to the complete transition to the use of Modernized EDGAR, the EDGAR Filer Manual will consist of three parts. For filers using modernized EDGARLink, the requirements are set forth in EDGAR Filer Manual: Guide for Electronic Filing with the U.S. Securities and Exchange Commission (Release 7.0), Volume II—Modernized EDGARLink. For filers using Legacy EDGAR, the applicable provisions are set forth in EDGAR Filer Manual, Release 6.75. All of these provisions have been incorporated by reference into the Code of Federal Regulations, which action was approved by the Director of the Federal Register in accordance with 5 U.S.C. 552(a) and 1 CFR Part 51. Additional provisions applicable to Form N–SAR filers are set forth in EDGAR Filer Manual: N–SAR Supplement, EDGAR Release 6.1.

You must comply with these requirements in order for documents to be timely received and accepted. You can obtain paper copies of the EDGAR Filer Manual from the following address: Public Reference Room, U.S. Securities and Exchange Commission, 450 5th Street, NW., Washington, DC. 20549–0102 or by calling Disclosure Incorporated at (800) 638–8241. Electronic format copies are available on the SEC's Web Site. The SEC's Web Site address for the Manual is http://www.sec.gov/asec/ofis/filerman.htm. Information on becoming an EDGAR e-mail/electronic bulletin board subscriber is available by contacting TRW/UUNET at (703) 345–8900 or at www.trw-edgar.com.

adopted minor amendments to the EDGAR rules; Release No. 33–7472 (Oct. 24, 1997) (62 FR 58647), in which we announced that, as of January 1, 1998, we would not accept in paper filings that we require filers to submit electronically; Release No. 34–40935 (Jan. 12, 1999) (64 FR 2843) in which we made mandatory the electronic filing of Form 13F; Release No. 33–7684 (May 17, 1999) (64 FR 27888), in which we adopted amendments to implement the first stage of EDGAR modernization; and Release No. 33-7855 (April 24, 2000) (65 FR 23937), in which we implemented EDGAR Release 7.0.

[5] 5 U.S.C. 553(b).

[6] 5 U.S.C. 601–612.

[7] 5 U.S.C. 553(d)(3).

[8] 15 U.S.C. 77f, 77g, 77h, 77j and 77s(a).

[9] 15 U.S.C. 78c, 78*l*, 78m, 78n, 78o, 78w and 78*ll*.

[10] 15 U.S.C. 79t.

[11] 15 U.S.C. 77sss.

[12] 15 U.S.C. 80a–8, 80a–29, 80a–30 and 80a–37.

Dated: May 16, 2000.

Margaret H. McFarland,

Deputy Secretary.

[FR Doc. 00–12756 Filed 5–25–00; 8:45 am]

BILLING CODE 8010–01–P

DEPARTMENT OF HEALTH AND HUMAN SERVICES

Food and Drug Administration

21 CFR Part 176

[Docket No. 00F–0813]

Indirect Food Additives: Paper and Paperboard Components

AGENCY: Food and Drug Administration, HHS.

ACTION: Final rule.

SUMMARY: The Food and Drug Administration (FDA) is amending the food additive regulations to provide for the safe use of sodium xylenesulfonate as a component of paper and paperboard intended to contact food. This action is in response to a petition filed by Tritex Co., Inc.

DATES: This rule is effective May 26, 2000. Submit written objections and requests for a hearing by June 26, 2000.

ADDRESSES: Submit written objections to the Dockets Management Branch (HFA–305), Food and Drug Administration, 5630 Fishers Lane, rm. 1061, Rockville, MD 20852.

FOR FURTHER INFORMATION CONTACT: Mark A. Hepp, Center for Food Safety and Applied Nutrition (HFS–215), Food and Drug Administration, 200 C St. SW., Washington, DC 20204, 202–418–3098.

SUPPLEMENTARY INFORMATION: In a notice published in the **Federal Register** of March 7, 2000 (65 FR 12015), FDA announced that a food additive petition (FAP 0B4719) had been filed by Tritex Co., Inc., 1001 Boul. Industriel, Saint-Eustache (Quebec), CANADA J7R 6C3 (zip code was incorrectly identified as J7H 6C3 in the March notice). The petition proposed to amend the food additive regulations in § 176.170 *Components of paper and paperboard in contact with aqueous and fatty foods* (21 CFR 176.170) to provide for the safe use of sodium xylene sulfonated as a component of paper and paperboard intended to contact food. Although the additive was identified as sodium xylene sulfonated in the notice of filing, FDA feels that it is more appropriately listed as sodium xylenesulfonate in this final rule.

FDA has evaluated data in the petition and other relevant material. Based on this information, the agency concludes that the proposed use of the additive is safe, that the additive will achieve its intended technical effect, and therefore, that the regulations in § 176.170 should be amended as set forth below.

In accordance with § 171.1(h) (21 CFR 171.1(h)), the petition and the documents that FDA considered and relied upon in reaching its decision to approve the petition are available for inspection at the Center for Food Safety and Applied Nutrition by appointment with the information contact person listed above. As provided in § 171.1(h), the agency will delete from the documents any materials that are not available for public disclosure before making the documents available for inspection.

The agency has previously considered the potential environmental effects of this rule as announced in the notice of filing for FAP 0B4719. No new information or comments have been received that would affect the agency's previous determination that there is no significant impact on the human environment and that an environmental impact statement is not required.

This final rule contains no collections of information. Therefore, clearance by the Office of Management and Budget under the Paperwork Reduction Act of 1995 is not required.

Any person who will be adversely affected by this regulation may at any time file with the Dockets Management Branch (address above) written objections by June 26, 2000. Each objection shall be separately numbered, and each numbered objection shall specify with particularity the provisions of the regulation to which objection is made and the grounds for the objection. Each numbered objection on which a hearing is requested shall specifically so state. Failure to request a hearing for any particular objection shall constitute a waiver of the right to a hearing on that objection. Each numbered objection for which a hearing is requested shall include a detailed description and analysis of the specific factual information intended to be presented in support of the objection in the event that a hearing is held. Failure to include such a description and analysis for any particular objection shall constitute a waiver of the right to a hearing on the objection. Three copies of all documents are to be submitted and are to be identified with the docket number found in brackets in the heading of this document. Any objections received in response to the regulation may be seen in the Dockets Management Branch between 9 a.m. and 4 p.m., Monday through Friday.

List of Subjects in 21 CFR Part 176

Food additives, Food packaging.

Therefore, under the Federal Food, Drug, and Cosmetic Act and under authority delegated to the Commissioner of Food and Drugs, and redelegated to the Director, Center for Food Safety and Applied Nutrition, 21 CFR part 176 is amended as follows:

PART 176—INDIRECT FOOD ADDITIVES: PAPER AND PAPERBOARD COMPONENTS

1. The authority citation for 21 CFR part 176 continues to read as follows:

Authority: 21 U.S.C. 321, 342, 346, 348, 379e.

2. Section 176.170 is amended in the table in paragraph (b)(2) by alphabetically adding an entry under the headings ''List of substances'' and ''Limitations'' to read as follows:

§ 176.170 Components of paper and paperboard in contact with aqueous and fatty foods.

* * * * *

(b) * * *

(2) * * *

List of substances	Limitations
* * * * * * *	
Sodium xylenesulfonate (CAS Reg. No. 1300–72–7)	For use only in paper and paperboard coatings at levels not to exceed 0.01 percent by weight of the finished paper and paperboard.
* * * * * * *	

* * * * *

Dated: May 11, 2000.

L. Robert Lake,

Director of Regulations and Policy, Center for Food Safety and Applied Nutrition.

[FR Doc. 00–13209 Filed 5–25–00; 8:45 am]

BILLING CODE 4160–01–F

DEPARTMENT OF HEALTH AND HUMAN SERVICES

Food and Drug Administration

21 CFR Part 200

[Docket No. 96N–0048]

RIN 0910–AA88

Sterility Requirement for Aqueous-Based Drug Products for Oral Inhalation

AGENCY: Food and Drug Administration, HHS.

ACTION: Final rule.

SUMMARY: The Food and Drug Administration (FDA) is amending its regulations to require that all prescription and over-the-counter (OTC) aqueous-based drug products for oral inhalation be manufactured sterile. This rule applies to aqueous-based oral inhalation drug products in both single-dose and multiple-use primary packaging. Pressurized metered-dose inhalers are not subject to this rule. Based on reports of adverse drug experiences from contaminated nonsterile inhalation drug products and recalls of these products, FDA is taking this action to help ensure the safety and effectiveness of these products.

DATES: This rule is effective May 27, 2002.

FOR FURTHER INFORMATION CONTACT: Peter H. Cooney, Center for Drug Evaluation and Research (HFD–160), Food and Drug Administration, 5600 Fishers Lane, Rockville, MD 20857, 301–443–5818.

SUPPLEMENTARY INFORMATION:

I. Background

In the **Federal Register** of September 23, 1997 (62 FR 49638), FDA proposed to amend its regulations to require that all inhalation solutions for nebulization be manufactured sterile. This action was proposed to help ensure the safety and effectiveness of these drug products.

Drug products for oral inhalation are used to treat a variety of breathing disorders and are frequently administered to patients who are immunocompromised, have cystic fibrosis, or have chronic obstructive airway disease. Aqueous-based oral inhalation drug products either in single-dose or multiple-use packaging are administered by oral inhalation into the lungs as a mist or spray created by a nebulizer device. The majority of inhalation drug products on the market are manufactured to be sterile. Those products not manufactured to be sterile are often manufactured under assigned microbial count limits, but current manufacturing methods and safeguards have not prevented dangerous microbial contamination.

Inhalation drug products contaminated with microorganisms are likely to cause lung infections because the contaminating organisms are introduced with the drug product directly into the lungs through the mouth. Thus, microbial contamination of these products may result in serious health consequences. Microbial contamination of these products may also cause degradation of the drug product.

Because of contamination problems with several different aqueous-based drug products for oral inhalation and for the reasons explained in the proposed rule, FDA has determined that current manufacturing methods and safeguards against contamination, including microbial limits tests, have not prevented dangerous microbial contamination of nonsterile aqueous-based drug products for oral inhalation.

The final rule reflects FDA's determination that all aqueous-based drug products for oral inhalation be manufactured sterile. Once the final rule becomes effective, failure to comply with the sterility requirement will result in a finding that the drug product is adulterated under section 501(a)(2)(B) of the Federal Food, Drug, and Cosmetic Act (the act) (21 U.S.C. 351(a)(2)(B)), and misbranded under section 502(j) of the act (21 U.S.C. 352(j)). Failure to comply with the sterility requirement will also result in the agency's refusal to approve a new or abbreviated application for a product, under section 505(d)(1), (d)(2), (d)(3), and (j)(4)(A) of the act (21 U.S.C. 355(d)(1), (d)(2), (d)(3), and (j)(4)(A)).

II. Highlights of the Final Rule

This final rule amends the regulations governing requirements for specific classes of drugs to include new § 200.51 for aqueous-based drug products for oral inhalation. Section 200.51(a) requires that all prescription and OTC aqueous-based drug products for oral inhalation be manufactured sterile. FDA is taking this action to prevent the public health consequences of the distribution of contaminated aqueous-based drug products for oral inhalation and to help ensure the safety and effectiveness of these products.

In the **Federal Register** of October 11, 1991 (56 FR 51354), FDA proposed to require that manufacturers use a terminal sterilization process when preparing a sterile drug unless the process adversely affects the drug product. The October 11, 1991, proposed rule would require that manufacturers include in their applications a written justification for not using terminal sterilization if such process is not appropriate. The agency plans to issue a final rule regarding terminal sterilization. When the proposed requirement for terminal sterilization becomes final, manufacturers of aqueous-based drug products for oral inhalation will be subject to its requirements.

The agency has revised the proposed regulation in response to comments received on the proposed rule. The comments and responses are discussed in section III of this document, ''Comments on the Proposed Rule.'' The agency is revising the title of proposed § 200.51 from ''Sterility Requirements for Inhalation Solution Drug Products'' to ''Aqueous-Based Drug Products for Oral Inhalation.'' The new title names the specific class of drugs subject to the rule in conformance with the established format of part 200 (21 CFR part 200), subpart C of the regulations. The agency is removing the phrases ''inhalation solution drug products'' and ''inhalation solutions for nebulization'' from proposed § 200.51. These phrases are replaced by the phrase ''aqueous-based drug products for oral inhalation.'' The agency has added the phrase ''for oral inhalation'' to clarify that the rule applies to orally administered inhalation drug products and not nasal sprays. The agency has added the modifier ''aqueous-based'' to the type of drug products covered to exclude metered-dose inhalers from coverage. In addition, the agency has made minor edits to the final rule in response to the President's June 1, 1998, memorandum on plain language in government writing. The agency has increased the amount of time for manufacturers to comply with the sterility requirement from 1 year to 2 years. All manufacturers of nonsterile aqueous-based drug products for oral inhalation will have until 2 years after the date of publication of the final rule to comply with the sterility requirement. As discussed in section IV of this document, ''Effective Date,'' the agency believes this effective date more realistically reflects the time

manufacturers may need to establish the sterility of their products.

Section 200.51(b) states that manufacturers must comply with the requirements of 21 CFR 211.113(b) of FDA's current good manufacturing practice (CGMP) regulations. This section requires that manufacturers establish and follow appropriate written procedures designed to prevent microbiological contamination of drug products purporting to be sterile. Such procedures must include validation of any sterilization process.

In addition to the above highlights, the agency notes that persons holding an approved new drug application (NDA) or abbreviated application for a nonsterile aqueous-based drug product for oral inhalation must submit to FDA a supplemental application describing the new manufacturing process under § 314.70(b) or § 314.97 (21 CFR 314.70(b) or 314.97). The proposed rule stated that if a manufacturer intended to sterilize a product by terminal sterilization, the manufacturer must obtain prior FDA approval for such change under § 314.70(b)(2), but if a manufacturer intended to sterilize a product by aseptic processing they may make the change at the time a supplemental application is submitted under § 314.70(c)(1). The agency has now determined that the technological complexity of aseptic processing warrants prior approval of any changes in the manufacturing process. Accordingly, the agency concludes that all manufacturing changes related to sterility requirements require supplemental applications to be submitted and approved under § 314.70(b)(2) prior to making any changes. In November 1999, a guidance related to this topic, entitled ''Changes to an Approved NDA or ANDA,'' became available. This guidance states that the agency considers a change in the sterilization process, e.g. from aseptic processing to terminal sterilization or vice versa, a major change to any approved application for which the manufacturer should submit a prior approval supplement. The agency notes that a proposed rule entitled ''Supplements and Other Changes to an Approved Application,'' published in the **Federal Register** of June 28, 1999 (64 FR 34608). This proposed rule is currently being finalized and may further affect the filing of supplemental applications related to this rule.

The following information should be included in a supplemental application related to this rule:

- Complete validation data for the aseptic process (see November 1994 guidance document entitled ''Guidance for Industry for the Submission of Documentation for Sterilization Process Validation in Applications for Human and Veterinary Drug Products'');
- For abbreviated applications, an executed batch record for a production batch of the product using the approved formulation;
- In-process and release control data;
- Updated release specifications that include sterility;
- Three months accelerated stability data;
- An updated stability protocol to include either sterility or container/closure integrity testing initially and at expiry; and
- A commitment to place the first three commercial batches into the routine stability program and submit the data in annual reports.

III. Comments on the Proposed Rule

The agency received a total of 61 comments on the September 23, 1997, proposed rule. Forty-nine of those comments were from consumers of an OTC aqueous solution of epinephrine sold in a kit with an atomizer. Of the remaining 12 comments, 8 were from industry, 2 were from associations of health care professionals, 1 was from academia, and 1 was from a Federal Government agency. The majority of comments requested clarification of the scope of the rule and the drug products intended to be covered, and also discussed the economic impacts of the proposed rule.

A. Covered Products

1. The proposed rule stated: ''All inhalation solutions for nebulization shall be manufactured to be sterile'' (proposed § 200.51(a)). Several comments indicated that the scope of drug products intended to be covered by the proposed rule was either unclear or overbroad. Some of the comments asked whether intranasal sprays would be subject to the rule. One comment asked whether both OTC and prescription drugs were covered. Three comments suggested clarifying that only aqueous-based drug products are subject to the rule. One comment interpreted the proposed rule to cover OTC and prescription drugs dispensed out of a manufacturer's primary packaging container into a separate, secondary and independent device prior to administration to the end user or patient, excluding nebulized or atomized sprays for inhalation. The comment stated that primary formulations should include both single-dose and multiple-use sterile products to eliminate microbial contamination during use. One comment suggested that the rule cover inhalation suspension products, stating that they contain more nutrients that contaminating microorganisms can metabolize than do inhalation solutions, and suggested that the title of the rule be modified to reflect this change.

The agency has considered these comments and agrees that further clarification of products covered by the rule is warranted. In response to these comments, the agency has revised the final rule to state: ''All aqueous-based drug products for oral inhalation must be manufactured to be sterile.'' Because the rule covers only drug products administered orally, it does not cover nasal sprays. Because the rule covers only aqueous-based drug products, pressurized metered-dose inhalers are not covered. All marketed prescription and OTC drugs are covered by the rule.

The agency agrees with the comment that inhalation suspension products pose contamination risks at least as great as those of inhalation solution products. Aqueous-based suspension drug products for oral inhalation would also bypass many of a patient's natural defense mechanisms and, if contaminated, pose similar risks. However, all currently marketed inhalation suspension drug products are metered-dose inhalers and, because they are metered-dose inhalers, are not subject to this final rule. Any aqueous-based oral inhalation suspension drug products approved in the future that are not metered-dose inhalers are subject to this rule.

B. Pharmacy Compounding

2. One comment asked whether the proposed rule would cover solutions for oral inhalation compounded under applicable practice of pharmacy provisions and regulations. Another comment stated that a large fraction of nebulizer solutions sold in the United States are compounded in pharmacies and suggested that such facilities use chemicals of dubious quality, that such solutions are dispensed in unsafe vials, and that preservatives used are contraindicated in anti-asthma products. This comment supported the rule and suggested that the rule would resolve issues of compounding in pharmacies which, the comment stated, results in millions of dollars in Medicare fraud.

Compounding occurs when a pharmacist or physician mixes, combines, or alters ingredients to create a customized drug product for an individual patient. The issue of pharmacy compounding is addressed in section 127 of the Food and Drug

Administration Modernization Act of 1997 (Pub. L. 105–115). Section 127 adds section 503A to the act (21 U.S.C. 353a). Section 503A(b)(3)(A) of the act provides that a drug product may qualify for exemptions from certain provisions of the act, including CGMP requirements (section 501(a)(2)(B) of the act) if, among other conditions, the drug product is not identified by regulation as a drug product that presents demonstrable difficulties for compounding that reasonably demonstrate an adverse effect on the safety or effectiveness of that drug product. FDA intends to issue regulations to implement section 503A(b)(3)(A) of the act. During the course of that rulemaking, the agency intends to consider, among other issues, whether aqueous-based drug products for oral inhalation present demonstrable difficulties for compounding that reasonably demonstrate an adverse effect on the safety or effectiveness of that drug product. Compounded aqueous-based drug products for oral inhalation that fail to meet any of the conditions of section 503A of the act are subject to the statutory CGMP provision (section 501(A)(2)(B) of the act) and, therefore, are subject to the requirements of this final rule.

C. Packaging

3. Several comments asked whether the proposed rule addresses maintaining the sterility of multiple-use containers after the container is opened and closed for later use. These comments stated that there is a high risk of contamination of inhalation drug products when multiple-use containers, e.g., bottles with droppers, are opened and used in a nonsterile environment. One comment asked whether the rule would require single-dose containers for one-time use. Two comments noted that new packaging is either on the market or in development that would eliminate the need to transfer aqueous-based drugs into separate secondary receptacles, thus reducing the potential for microbial contamination.

The agency recognizes that multiple-use containers raise issues of microbial contamination when aseptic handling procedures are not used either by a patient at home or in a hospital setting. However, the intent of this rule is to ensure sterility from the point of manufacture. The rule is intended to prevent contaminated products from being distributed by manufacturers. While the agency encourages the use of single-dose containers, the agency is not requiring their use at this time. The agency supports innovations in new packaging that would reduce the likelihood of microbial contamination. The agency has no current plans, however, to require the use of such packaging by manufacturers.

D. Antimicrobial Preservatives

4. One comment suggested that the proposed rule was a ''simplistic fix'' for a series of complex problems including inadequate antimicrobial preservation systems for in-use contamination control, inadequate U.S. Pharmacopeia (USP) microbiological testing methods, and defective hospital infection control procedures. The comment questioned the adequacy of microbial limits testing, in particular USP procedure <61>, to reliably detect the prevalent contaminants of inhalation drug products. The comment also suggested that there is no evidence for the assumption underlying the proposed rule that contaminating organisms have developed resistance to the antimicrobial preservative systems used. The comment stated that organisms historically known to be resistant to benzalkonium chloride have been noted and that mistakes have occurred when companies have made errors designing a product's antimicrobial preservative system. The comment also noted the inadvisability of using a single preservative in the manufacturing process and suggested that the proposed rule shows that the agency now believes preservatives are to be used to address inadequate manufacturing contamination controls that were previously considered to be serious CGMP violations.

Another comment acknowledged that some antimicrobial preservatives are no longer effective because resistance to them in certain bacterial strains has developed, and expressed concern as to whether this problem would be addressed by the rule. Similarly, a different comment noted microbial contamination in spite of preservatives. This comment indicated support for sterile, additive-free solutions, noting that one disadvantage of preservatives is that they may be contraindicated in anti-asthmatic products. This comment stated that benzalkonium chloride is a known bronchoconstrictor contraindicated in anti-asthmatic products and that edetic acid, while not as potent as benzalkonium chloride, causes bronchospasm and would not be present in an ideal nebulizer solution.

Antimicrobial preservatives are added to dosage forms to protect them from microbial contamination. The USP states that antimicrobial agents should not be used solely to reduce the viable microbial count as a substitute for good manufacturing practices. The USP sets forth tests for estimating the presence, or absence, of microorganisms. USP procedure <61> sets forth tests for the estimation of the number of viable aerobic microorganisms present and the absence of designated microbial species in both raw materials and finished form drug products. FDA recognizes that both sterile and nonsterile drug products may contain preservative systems to control bacteria and fungi that may be inadvertently introduced during manufacturing or use.

Concerning the comment that the proposed rule represents an inappropriate policy change in allowing preservatives to be used to address inadequate manufacturing contamination controls, this rule does not change the agency's policy of considering such use of preservatives a serious CGMP violation. To the extent agency policy is reflected in the USP, the USP clearly states that while situations may arise where the use of an antimicrobial preservative may be necessary to minimize the proliferation of microorganisms, all useful antimicrobial agents are toxic substances.

The agency agrees with the comment acknowledging that some antimicrobial preservatives are no longer fully effective because certain bacterial strains have developed resistance. The agency disagrees with the comment that suggests there is no evidence that contaminating organisms have developed resistance to antimicrobial preservatives. Bacteria best identified as belonging to the *Pseudomonas* family have been known for many years to survive and grow in commercial preparations of quanternary ammonium compounds such as benzalkonium chloride. (See, for example, Adair, F.W., S.G. Geftic, and J. Gelzer, ''Resistance of *Pseudomonas* to Quaternary Ammonium Compounds: I. Growth in Benzalkonium Chloride Solution,'' *Applied Microbiology*, vol. 18, pp. 299–302, 1969. See also, Dixon, R.E., et al., ''Aqueous Quaternary Ammonium Antiseptics and Disinfectants,'' *Journal of the American Medical Association*, vol. 236, pp. 2415–2417, 1976.) In fact, the albuterol sulfate product recalled in January 1994, discussed in the proposed rule, contained benzalkonium chloride, an antimicrobial preservative, yet the preservative failed to prevent microbial contamination of the product. As of October 28, 1997, the agency's Spontaneous Reporting System (SRS) reported that this albuterol sulfate incident was associated with a total of 2,846 cases including 1,498 serious cases, 1,163 hospitalizations, and 441 deaths.

The agency acknowledges the public health need for sterile, additive-free, aqueous-based drug products for oral inhalation for the segment of the population for whom antimicrobial products are contraindicated (e.g., sensitive patients with asthma and other pulmonary diseases). To this end, the agency encourages the manufacture of sterile, additive-free, single-dose drug products for oral inhalation. However, the agency is not at this time requiring that all aqueous-based drug products for oral inhalation be manufactured in single-dose containers.

The agency recognizes that microbial limits tests have not prevented serious microbial contamination of nonsterile inhalation drug products in the past. Endproduct microbial limits tests performed prior to distribution may not be capable of detecting low levels of contamination. Products that initially pass the microbial limits test may support the growth of contaminating organisms that could later increase to unacceptable levels. The agency believes that requiring the sterility of such products from the point of manufacture will reduce the likelihood of microbial contamination.

The agency recognizes that contamination of these products may occur during usage. Such contamination may occur because of inadequate handling procedures, including defective hospital infection control procedures, or patient handling errors. The agency notes that the National Center for Infectious Diseases of the Centers for Disease Control and Prevention is sponsoring initiatives on preventing nosocomial transmission of antimicrobial-resistant microorganisms and directs those interested to their Internet at www.cdc.gov/ncidod/ for related information. The agency encourages hospital personnel and patients to follow instructions in the labeling for such products, including any precautions for use. The agency emphasizes the importance of following proper handling technique when transferring these products from their original container into an atomizer or nebulizer. FDA has determined that the best way for it to prevent future public health problems associated with contaminated aqueous-based drug products for oral inhalation is to require sterility at the point of manufacture.

E. Costs of Compliance

In the proposed rule, FDA estimated that the affected industry would incur total annual compliance costs of $192,000 to $1,210,000 (after amortization over 10 years at a 7 percent interest rate), mostly for constructing clean rooms in the five manufacturing facilities believed to be using a nonsterile production process. Several of the comments addressed aspects of FDA's original analysis of economic impacts.

5. Three comments stated that FDA had underestimated the costs of compliance and two comments provided estimates of compliance costs for their companies, although they did not provide the bases for these estimates.

FDA has considered these estimates and has revised its compliance cost estimates for the final rule, as described in section V of this document, ''Analysis of Economic Impacts.'' The agency's full cost analysis is based on a report prepared by its contractor, Eastern Research Group (ERG) (available in the docket) entitled ''Cost Impact on the Pharmaceutical Industry of Final Sterility Requirements for Inhalation Solution Products,'' and the comments mentioned above.

6. The U.S. Small Business Administration (SBA) commented that there was insufficient information on the record to evaluate the need for the regulation, as measured by the incidence of illness, against the enormous cost of compliance.

The proposed rule listed several incidents of contaminated inhalation drug products that jeopardized the public health and safety and were the subject of product recalls (62 FR 49638 at 49639). The proposed rule did not, however, provide data on adverse events associated with these recalls. The agency notes that as of October 28, 1997, FDA's SRS reported that the albuterol sulfate product recalled in January 1994, discussed in the proposed rule, was associated with 2,846 reports of adverse events including 441 deaths. FDA believes that this evidence, along with the resistance to microbial preservatives and the growth potential of the *Pseudomonas* family of bacteria, provides the public health and safety justification for this rule. Further, as the revised compliance costs of the final rule are estimated at $10.1 million per year, the agency believes that public health and safety concerns outweigh the compliance burdens.

F. Training Costs

7. SBA noted the lack of training costs for sterility procedures in the agency's original cost estimates. FDA agrees with this comment, and training costs are now included in its final estimate.

G. Enforcement of CGMP Regulations

8. One comment suggested that enforcement of CGMP regulations and monitoring of unethical repackaging operations would be more effective and less costly then requiring firms to convert to sterile processes.

The agency has determined that adherence to CGMP regulations without appropriate sterilization procedures does not provide an adequate level of assurance that aqueous-based drug products for oral inhalation will be free of contaminants. Based on past incidents of serious health risks to users, the agency has determined that enforcement of CGMP's is not enough to ensure these products are contaminant-free when they leave the manufacturer for distribution. Antimicrobial preservatives used in these products may not be effective because many bacteria, including *Pseudomonas* spp., have developed resistance to these preservatives. The albuterol sulfate product recalled in January 1994, discussed in the proposed rule, contained benzalkonium chloride, an antimicrobial preservative, yet the preservative failed to prevent microbial contamination of the product. Resistance to preservatives is not species specific; strains of many species are resistant. Furthermore, use of a single preservative in a nonsterile inhalation drug product for an extended period may actually select for preservative-resistant strains of *Pseudomonas* spp. or other bacteria. Similarly, although the agency recognizes the importance of the enforcement of repackaging regulations, this rule is intended to help ensure that products are sterile at the point of manufacture.

H. Hazard Analysis and Critical Control Point (HACCP) Program

9. SBA recommended the use of a HACCP program, like that used for the food industry. SBA stated that a HACCP program would reduce compliance costs.

HACCP is a preventive system of hazard control used primarily in the food industry. The HACCP concept is a systematic approach to the identification and assessment of the risk of biological, chemical, and physical hazards that may occur in a particular production process or practice and the control of those hazards. Under HACCP, the producer develops a plan that anticipates and identifies the points in the production process where a failure would likely result in a hazard being created or allowed to persist. These points are referred to as critical control points (CCP's). Under HACCP, identified CCP's are systematically monitored to ensure that critical limits are not exceeded, and records are kept

of that monitoring. Corrective actions are taken when control of a CCP is lost and these actions are documented. The effectiveness of HACCP is also systematically verified by the processor.

Because of the potential public health consequences of contaminated aqueous-based drug products for oral inhalation, as shown by the incidents cited earlier in this document, the agency concludes that a HACCP system is not an adequate substitute for sterilization requirements.

I. Clean Rooms

10. Another comment stated that the proposed rule would limit the use of each clean room to one product and questioned the necessity of this.

FDA is aware that the trade press has reported that the proposed rule would require one product per clean room. FDA is clarifying that this interpretation of the proposed rule is inaccurate. FDA did not intend to limit, and is not limiting, each clean room to the manufacture of only one inhalation product.

J. Specific OTC Drug Product

11. The agency received 49 comments from consumers of an OTC asthma inhalant, Breatheasy, as well as one comment from the manufacturer of the Breatheasy product, Pascal Co., Inc., of Bellevue, WA. Pascal Co., Inc., distributed a letter to consumers of its product stating the agency's new policy would require that all inhalants be manufactured in clean rooms and suggesting that overhead costs to produce clean rooms would far exceed annual sales of this product. Pascal stated that the rule would be cost prohibitive for the company and would require it to discontinue manufacture of the product. The 49 letters from consumers of this product indicated that they had been informed by Pascal Co., Inc., that the new policy would require the manufacturer to discontinue manufacture of the product. These letters testified to individual experiences with the product, stating duration of use, some for as many as 50 or 60 years, lack of any ill effects or quality problems, unique needs met by the product exclusive of any other available remedy, and the low cost of the product.

The agency has reviewed the concerns of individuals who have used this product for many years and who are understandably concerned about it being discontinued. The agency contacted Pascal, Inc., and reviewed the labeling of the product to determine if it is the type of product intended to be covered by the rule.

The Breatheasy product is a 2-percent buffered aqueous solution of epinephrine that comes in a kit that contains an atomizer. Breatheasy is the type of product that has raised serious concerns about the health and safety of individuals using such products and it is an example of the type of product intended to be covered by the final rule. The agency has determined that other, alternative OTC epinephrine inhalation products, which do not raise the safety concerns of this product, are available on the market to treat the symptoms of these individuals. Should Breatheasy become unavailable, the agency suggests that individuals consult their health care practitioners for the identity of an appropriate alternative OTC product.

IV. Effective Date

12. Two comments stated that the time for implementation was too short and impractical for conversion to sterile processes. Both comments requested up to a 2-year phase-in period to allow development time for packaging, stability data, and facility modifications. SBA stated that allowing a 1-year transition period, as proposed, was not sufficient. The comment requested a transition period of 2 years.

FDA has considered these comments and has decided to lengthen the effective date to 2 years after publication of the final rule to give each firm a longer period of time to implement the new sterility requirements.

The final rule prohibits all manufacturers of nonsterile aqueous-based drug products for oral inhalation, including those products currently approved, from introducing or delivering for introduction into interstate commerce any such products that are nonsterile beginning 2 years after the date of publication of the final rule in the **Federal Register**.

Holders of approved NDA's and abbreviated new drug applications (ANDA's) must submit supplemental applications to FDA to establish sterility of these products within 2 years after the publication of the final rule in the **Federal Register**.

Any NDA or ANDA for a nonsterile aqueous-based drug product for oral inhalation under review by FDA on or after the date of publication of the final rule, but before the effective date of the final rule may be approved if the application is otherwise approvable and the applicant agrees to establish the sterility of its drug product in a supplemental application by the effective date. On or after the effective date of the final rule, FDA will refuse to approve an NDA or ANDA for an aqueous-based drug product for oral inhalation if the applicant has not established the sterility of the product.

V. Analysis of Impacts

A. Introduction

FDA has examined the impacts of the final rule under Executive Order 12866, the Regulatory Flexibility Act (5 U.S.C. 601–612) (as amended by subtitle D of the Small Business Regulatory Fairness Act of 1996 (Pub. L. 104–121)), and the Unfunded Mandates Reform Act of 1995 (Pub. L. 104–4). Executive Order 12866 directs agencies to assess all costs and benefits of available regulatory alternatives and, when regulation is necessary, to select regulatory approaches that maximize net benefits (including potential economic, environmental, public health and safety, and other advantages; distributive impacts; and equity). Under the Regulatory Flexibility Act, if a rule has a significant impact on a substantial number of small entities, an agency must analyze regulatory options that would minimize any significant impact of the rule on small entities. The Unfunded Mandates Reform Act requires agencies to prepare an assessment of anticipated costs and benefits before enacting any rule that may result in an expenditure in any one year by State, local, and tribal governments, in the aggregate, or by the private sector, of $100 million (adjusted annually for inflation).

FDA concludes that this final rule is consistent with the principles set forth in the Executive Order and in these two statutes. FDA estimates that the final rule would impose annual compliance costs on industry of about $10.1 million. In addition, the final rule is a significant regulatory action as defined by the Executive Order and was subject to review under the Executive Order. FDA has also determined, as explained later in this section, that the final rule may have a significant economic impact on a substantial number of small entities. This section, along with the report by FDA's contractor ERG, constitutes the agency's final regulatory flexibility analysis as required under the Regulatory Flexibility Act. Further, because this final rule makes no mandates on government entities and will result in expenditures of less than $100 million in any one year, FDA need not prepare additional analyses under the Unfunded Mandates Reform Act.

B. Compliance Requirements and Costs

FDA is amending its regulations to require that all prescription and OTC aqueous-based inhalation solutions or suspensions in single-dose or multiple-

use primary packaging administered orally via a secondary device or other ancillary hardware (e.g., an atomizer, nebulizer, or pump), be manufactured to be sterile. This does not include inhalation solutions administered by pressurized metered dose inhalers. FDA believes this action is necessary to help ensure the safety and efficacy of these products, due to reports of adverse drug experiences from contaminated nonsterile inhalation solutions and recalls of these products.

In the preamble to the proposed rule published September 23, 1997, FDA estimated that the affected industry would incur total annual compliance costs of $192,000 to $1,210,000 (after amortization over 10 years at a 7 percent interest rate), mostly for constructing clean rooms in the five manufacturing facilities believed to be using a nonsterile production process. Several of the comments to the proposed rule addressed aspects of FDA's original analysis of economic impacts. These comments are addressed in section III of this document and below.

FDA has reviewed its original compliance cost estimates in light of the comments to the proposed rule, and has determined that it underestimated compliance costs to industry. The agency's revised estimates are fully described in the ERG report on compliance costs (available in the docket).

In the proposed rule, FDA estimated that up to five firms may still be using a nonsterile manufacturing process for inhalation solutions. ERG found that eight firms would be affected by the final rule because they use nonsterile manufacturing processes. The ERG estimate assumes that some products with an uncertain classification were actually nonsterile.

ERG concluded that the final rule would impose a total annual cost of $10.1 million (after amortization of capital costs over 10 years at a 7 percent interest rate). The majority of these annual costs ($8 million) are attributed to the increase in annual operating costs for two large manufacturers. This estimate was derived from the comment of one of the large companies, which indicated that its operating costs would increase by $4 million, primarily due to the lower labor productivity that results from the extra activities necessary when operating in a sterile environment. One-time capital and related costs are estimated at about $8.3 million for converting to the sterile production process, including the planning, constructing and equipping of clean rooms, training of employees, and revalidation of production processes. On an annualized basis (after amortizing over 10 years at a 7 percent discount rate), these costs are projected at $600,000 per year for each of these two large manufacturers.

The other six manufacturers, which produce nonsterile inhalation products with much lower annual revenues (about $1 million or less), are not expected to convert their production processes, due to the relatively high compliance costs compared to the revenues from these products. Instead, ERG projected that one-half of these firms would transfer production of these products to a contract manufacturer, with an estimated increase in manufacturing costs of about 30 percent, resulting in an additional $900,000 per year in costs. The other one-half of these small volume manufacturers, those with the smallest revenues, are expected to discontinue these products altogether. Consumers of the discontinued products are expected to switch to alternative products. FDA believes, based on the small volume of affected sales, the wide availability of competing products, and the probable low elasticity of product demand, that the loss of consumer and producer value due to this regulation would be extremely small.

After further review, FDA also decided to require inhalation suspension products, other than suspensions in pressurized metered dose inhalers, to be sterile although they had not been included in the proposal. There are currently five approved inhalation suspension products. Because they are all metered-dose inhalers, however, they are not covered under the final rule. Further, FDA does not expect to receive any new applications for inhalation suspensions that are nonsterile, as the current procedures for new products are likely to include a sterilization process. Thus, FDA has not raised its compliance cost estimates due to the addition of inhalation suspension products for oral inhalation in the final rule.

C. Affected Entities

As stated above, the Regulatory Flexibility Act requires agencies to analyze regulatory options that would minimize any significant impact of a rule on small entities, unless the rule is not expected to have a significant economic impact on a substantial number of small entities.

SBA limits the definition of small businesses in the pharmaceutical industry to those with less than 750 employees. ERG estimated that five small manufacturers with a total of eight products will be affected by this rule, although the data necessary to make this determination are scarce and often rely on sales volume rather than number of employees. About one-half of these manufacturers (two or three) are expected to transfer production to a contract manufacturer, which is estimated to increase operating costs by about $180,000 each per year per product. In addition, these companies may experience a loss of jobs as these products are transferred to the contract manufacturers. The other two or three companies are expected to cease production of their product completely, thereby incurring the loss of profits on those products. While neither ERG nor FDA has quantified these impacts, it expects them to be low due to the low product sales volume.

Affected firms will need to acquire some new professional skills, because this rule deals with a new manufacturing process that will require technicians to have a knowledge of sterility procedures. Any other skills necessary for implementation of this rule (e.g., skills associated with preparing the supplemental application) should already exist within the firms and should not need to be newly acquired. No other compliance costs are estimated for these manufacturers.

D. Alternatives Considered

FDA has considered alternatives to this rule. FDA considered exempting small entities. However, as stated in the proposal, the alternative of exempting small businesses from the rule is not feasible, because most firms using a nonsterile process are small firms and thus granting small businesses an exemption would negate the purpose of the rule.

One alternative mentioned in the comments discussed in section III.H of this document was the creation of a HACCP program whereby the most critical points in the production process would be monitored for microbial safety problems, possibly resulting in lower compliance costs for small businesses. As discussed above, FDA has rejected a HACCP program for these drug products because of the potential public health consequences of contaminated products, as shown by the cited earlier incidents involving aqueous-based drug products for oral inhalation.

Another alternative to the final rule would have been to retain the 1-year effectiveness date as required by the proposed rule. Instead, FDA has responded to public comments by delaying the effectiveness date an extra year in order to give industry members additional time to adjust to the new requirements and mitigate costs as much as possible. In doing so, FDA has

eliminated compliance costs for 1 year, the present value of which is $10.1 million.

Another alternative mentioned in the comments and discussed in section III.G of this document was more uniform enforcement of CGMP's and monitoring of unethical repackaging. Based on past incidents of serious health risk to users, the agency has determined that enforcement of CGMP's is not enough to ensure these products are contaminant free when they leave the manufacturer for distribution. Similarly, one comment suggested end-testing the product in batches prior to shipment from the manufacturing facility. This comment incorrectly stated that all contaminated products to date have been caught prior to reaching or harming patients. As discussed in section III.E of this document, contaminated products have caused serious harm to patients. For this reason, the agency has determined that end-testing and/or enforcement of CGMP's are not adequate to address the serious public health and safety concerns raised by such incidents.

Due to contamination problems with several different inhalation solution drug products and adverse experience reports, FDA has determined that current manufacturing methods and safeguards against contamination, including microbial limits tests, have not prevented dangerous microbial contamination of nonsterile aqueous-based drug products for oral inhalation. Based on the significant health risk to users, FDA is requiring that all aqueous-based drug products for oral inhalation be manufactured sterile.

One alternative considered was to supply consumers and providers with information related to the potential risks of aqueous-based drug products for oral inhalation that are not manufactured to be sterile, instead of mandating sterility in this market. FDA is concerned that many prescribers and consumers may not understand the potential risks of such products, given that these products are approved and therefore regarded as safe and effective when used according to the labeling. In many circumstances, additional information would assist prescribers and users in making informed choices, and if it were possible to provide correct and complete information to all prescribers and consumers in this market, they should make the optimal choice for their situation. However, FDA does not believe that such information could be developed for nonsterile aqueous-based oral inhalation drug products that would be consistent with FDA's mandate under the Federal Food, Drug, and Cosmetic Act to assure that drug products are safe and effective. Additionally, even if such information could be developed, the cost associated with providing the information to the relevant parties would be too large, and FDA believes that these costs would overshadow any expected benefits of allowing fully informed consumers to make their own choice in this market.

VI. Environmental Impact

The agency previously considered the environmental effects of this rule as announced in the proposed rule (62 FR 49638). At that time, the agency determined under 21 CFR 25.30(h) that this action is of a type that does not individually or cumulatively have a significant effect on the human environment. No new information or comments have been received that would affect the agency's previous determination that there is no significant impact on the human environment. Therefore, neither an environmental assessment nor an environmental impact statement is required.

VII. Paperwork Reduction Act of 1995

This final rule contains information collection provisions that are subject to review by the Office of Management and Budget (OMB) under the Paperwork Reduction Act of 1995 (44 U.S.C. 3501–3520). The title, description, and respondent description of the information collection provisions are shown below with an estimate of the annual reporting and recordkeeping burden. Included in the estimate is the time for reviewing instructions, searching existing data sources, gathering and maintaining the data needed, and completing and reviewing each collection of information.

Title: Sterility Requirements for Aqueous-based drug products for oral inhalation.

Description: The final rule requires that all aqueous-based drug products for oral inhalation, including those currently approved, be manufactured sterile. Respondents will be required to submit a supplemental application under § 314.70(b) or § 314.97, describing their new manufacturing process for achieving sterility of their aqueous-based drug products for oral inhalation. FDA needs this information to determine compliance with this new regulation and will use information collected to make decisions on approval of supplemental applications. Applicants will have 2 years after the date of publication of the final rule to comply with the sterility requirement.

Description of Respondents: Respondents are businesses engaged in the manufacture of aqueous-based drug products for oral inhalation.

The collection of information described in the proposed rule was approved by OMB under control number 0910–0353. However, based on new data collected by its contractor, ERG, FDA has revised its estimate of the number of respondents in the original proposal for reporting and recordkeeping burden. Because the number of respondents has changed, the estimate of the total hours has changed. The economic analysis of the proposed rule estimated 5 manufacturers, while the economic analysis of the final rule estimates 8 manufacturers with 11 nonsterile products based on new data collected by ERG (see Ref. 1). However, four of the manufacturers are estimated to cease manufacturing, leaving four companies manufacturing seven products. These companies are estimated to cease manufacturing because they may lack the in-house technical capability to convert their operations or might find the prospective investments in sterile production technologies to be unattractive. Because each nonsterile product will require an annual report (21 CFR 314.81(b)(2)(iv)), the number of annual responses for nonsterile products has increased to seven. Based on a review of FDA's past experience with applicants submitting supplemental applications under § 314.97, we estimate 160 hours to prepare a supplemental application. Therefore, due to the increased estimate of respondents, the total hours for the annual reporting burden for manufacturers of nonsterile products has increased from 800 hours in the proposed rule to 1,120 hours in the final rule. The agency's review of the estimated reporting burden for manufacturers of sterile products in the proposed rule and its experience with the annual reporting burden for manufacturers of sterile products supported the estimate provided in the proposed rule. Therefore, the estimated reporting burden for manufacturers of sterile products in the final rule is the same as in the proposed rule.

TABLE 1.—ESTIMATED ANNUAL REPORTING BURDEN

21 CFR Section	No. of Respondents	Annual Frequency per Response	Total Annual Responses	Hours per Response	Total Hours
314.97	7	1	7	160	1,1201[1]
314.70	2	1	2	20	40[2]
Total					1,160

[1]Reporting burden for manufacturers of nonsterile products.
[2]Reporting burden for manufacturers of sterile products.

Because of the estimated increase from the proposed rule to the final rule in the number of respondents for nonsterile products, the number of recordkeepers in the recordkeeping burden of Table 2 has increased by two from the proposed rule. FDA estimated a total of seven recordkeepers in the proposed rule and now estimates a total of nine recordkeepers as a result of new data collected by ERG. The proposed rule estimated 2 hours per record, and FDA's review of that estimate and its experience with the control and validation of microbiological contamination supports this proposed estimate. Therefore, the total number of hours for the recordkeeping burden has increased from 14 hours to 18 hours.

TABLE 2.—ESTIMATED ANNUAL RECORDKEEPING BURDEN [1]

21 CFR Section	No. of Recordkeepers	Annual Frequency of Recordkeeping	Total Annual Records	Hours per Record	Total Hours
211.113(b)	9	1	9	2	18
Total					18

[1]There are no capital costs or operating and maintenance costs associated with this collection of information.

Individuals and organizations may submit comments on these burden estimates or on any other aspect of these information collection provisions, including suggestions for reducing the burden, and should direct them to the Dockets Management Branch (HFA–305), Food and Drug Administration, 5630 Fishers Lane, rm. 1061, Rockville, MD 20852.

The information collection provisions of this final rule have been submitted to OMB for review. Prior to the effective date of this final rule, FDA will publish a notice in the **Federal Register** announcing OMB's decision to approve, modify, or disapprove the information collection provisions in this final rule. An agency may not conduct or sponsor, and a person is not required to respond to a collection of information unless it displays a currently valid OMB control number.

VIII. Federalism

FDA has analyzed this final rule in accordance with the principles set forth in Executive Order 13132. FDA has determined that the rule does not contain policies that have federalism implications as defined in the order and, consequently, a federalism summary impact statement is not required.

IX. Reference

The following reference is on display in the Dockets Management Branch (address above) and may be seen by interested persons between 9 a.m. and 4 p.m., Monday through Friday.

1. Eastern Research Group, ''Cost Impact on the Pharmaceutical Industry of Final Sterility Requirements for Inhalation Solution Products,'' 1998.

List of Subjects in 21 CFR Part 200

Drugs, Prescription drugs.

Therefore, under the Federal Food, Drug, and Cosmetic Act and under authority delegated to the Commissioner of Food and Drugs, 21 CFR part 200 is amended as follows:

PART 200—GENERAL

1. The authority citation for 21 CFR part 200 continues to read as follows:

Authority: 21 U.S.C. 321, 331, 351, 352, 353, 355, 358, 360e, 371, 374, 375.

2. Section 200.51 is added to subpart C to read as follows:

§ 200.51 Aqueous-based drug products for oral inhalation.

(a) All aqueous-based drug products for oral inhalation must be manufactured to be sterile.

(b) Manufacturers must also comply with the requirements in § 211.113(b) of this chapter.

Dated: February 1, 2000.

Margaret M. Dotzel,

Acting Associate Commissioner for Policy.

[FR Doc. 00–13210 Filed 5–25–00; 8:45 am]

BILLING CODE 4160–01–F

DEPARTMENT OF STATE

22 CFR Part 123

[Public Notice 3318]

Exports of Commercial Communications Satellite Components, Systems, Parts, Accessories and Associated Technical Data

AGENCY: Bureau of Political-Military Affairs, State.

ACTION: Interim final rule.

SUMMARY: Section 1309(a) of the Foreign Relations Authorization Act for Fiscal Years 2000 and 2001 requires the Department of State to establish a regulatory regime for the export licensing to U.S. allies of commercial satellites, technologies, components, and systems, which shall include expedited approval, as appropriate, while ensuring priority to national security and U.S. commitments under the Missile Technology Control Regime.

Section 1302(a) of the same Act requires the Department to promulgate regulations in order to ensure timely reporting to the Department (within 15

days of shipment or export) of all shipment information concerning items exported pursuant to section 38 of the Arms Export Control Act. The Department will phase-in the reporting requirements for shipment information during the remainder of Calendar Year 2000 through publication of a separate rule change. However, U.S. exporters wishing to take advantage of the special regulatory regime for satellite related licensing to U.S. allies established in this amendment will need to meet the reporting requirements of section 1302(a) in accordance and coincident with the effective date of this amendment or their initial license application submissions. In order to facilitate use of the special regime, the Office of Defense Trade Controls will make available free of charge to U.S. exporters the computer software and guidance for its use that are needed to participate fully.

This interim final rule amends the International Traffic in Arms Regulations (ITAR) by establishing a new regulatory regime for communications satellite related exports to U.S. allies.

EFFECTIVE DATE: July 1, 2000.

FOR FURTHER INFORMATION CONTACT: William Lowell or Terry Davis, Office of Defense Trade Controls, Department of State, Telephone (202) 663–2700 or FAX (202) 261–8264, ATTN: Regulatory Change, Commercial Communications Satellites.

SUPPLEMENTARY INFORMATION: Section 1309(a) of the Foreign Relations Authorization Act for Fiscal Years 2000 and 2001 provides that the Secretary of State shall establish a regulatory regime for licensing the export of commercial satellites, satellite technologies, their components, and systems which shall include expedited approval, as appropriate, of the licensing for export by U.S. companies of such items to NATO allies and major non-NATO allies. Pursuant to § 1309(a) the regime should include expedited processing of requests for export authorizations that are time critical (including information exchange relating to satellite failures or anomalies); are required to submit bids to foreign persons for procurements; are related to re-export of unimproved materials, products, or data; or are required to obtain launch and on-orbit insurance.

Within this legislative framework, the Department of State (Office of Defense Trade Controls) and the Department of Defense (Defense Threat Reduction Agency/Technology Policy) convened in January 2000 a task force of U.S. aerospace industry experts who were members of the State Department's federal advisory committee for defense trade matters, the Defense Trade Advisory Group (DTAG). This DTAG task force met regularly with State and Defense in the period January–April 2000 for the purpose of setting forth a special licensing regime involving U.S. allies that would reflect experience gained since the transfer of commercial communications satellites to the U.S. Munitions List, which became effective March 15, 1999. This task force also drew on the technical and business expertise of other U.S. aerospace industry representatives in discrete product lines (particularly those involved in the supply of components and systems) and held a town hall discussion of the special licensing regime included herein at the April 2–4, 2000 Spring Conference of the Society for International Affairs, a non-profit association comprised of defense firms, held at Laguna Beach, California.

The ITAR amendment herein concerns the special satellite regime involving U.S. allies, provided for by authorizing legislation for exports and re-exports of U.S. Munitions List controlled articles for satellites to, within and among the territories of the member countries of NATO (Belgium, Canada, Czech Republic, Denmark, France, Germany, Greece, Hungary, Iceland, Italy, Luxembourg, Netherlands, Norway, Poland, Portugal, Spain, Turkey, United Kingdom and the United States) and countries that have been designated pursuant to the Foreign Assistance Act of 1961, as amended, as major non-NATO allies (Australia, New Zealand, Japan, Israel, Egypt, Jordan, Republic of Korea and Argentina). This coverage also includes exports and re-exports of U.S. Munitions List controlled articles for approved satellite projects to be launched from the United States or the territory of a NATO or major non-NATO ally. Importantly, unless otherwise specifically authorized at the time of license approval, this special satellite regime does not apply to any other country in any measure, including but not limited to intermediate consignment occurring during the initial export; temporary re-transfer or re-export; or launch into outer space of USML-controlled articles, whether or not incorporated (*e.g.,* embedded) in a satellite when that activity involves a country that is not a member of NATO or a major non-NATO ally of the United States.

The special satellite regime has three principal features. The first is the ability to use high volume licenses (*e.g.,* known in the trade as ''bulk'' licenses) for exports of specifically designed or modified components, parts, systems, accessories, attachments and certain associated technical data for commercial communications satellites under specified conditions for multiple shipments to any of the NATO or major non-NATO allies.

The second principal feature concerning use of this regime is that all eligible articles for export must be confined to an approved list of foreign aerospace firms located within the territories of U.S. allies for use in an approved list of commercial communications satellite programs of U.S. allies. The lists of foreign aerospace firms and commercial communications satellite programs included within the coverage of this regime will be kept under scrutiny by the U.S. Government and made publicly available on ODTC's Website and by other means. New firms and programs will be added to these lists following scrutiny within the U.S. Government (and approved for inclusion within the regime) in light of proposals from U.S. aerospace firms through export license applications.

Third, when exporting pursuant to the special regime, it is not necessary under specified conditions for U.S. exporters to provide in advance the details of purchase orders or contracts, or non transfer and end use certificates (*e.g.,* form DSP–83) where they may be required. While all of this documentation will continue to be mandatory, and while exporters will continue to be required to ascertain the specific end users and end uses prior to export or re-export, the required documentation will only be required to be furnished to ODTC within 15 days following shipment from the United States (or re-transfer within the approved territory), at which time U.S. exporters will report the appropriate shipping information (discussed further below) and furnish the required documentation.

For sensitive components, such as MTCR-controlled items, the long standing controls of the ITAR, including non-transfer and end use certificates, parts control plans, and the like, will continue to be required. But, in most cases, such documentation may be furnished within 15 days of shipment, as described below. Restrictions may also be imposed on such licenses, however, in view of the specific items proposed for export as appropriate in furtherance of the security and foreign policy of the United States (*e.g.,* to meet missile nonproliferation objectives). Further, for particularly sensitive articles or information, the U.S. Government retains the discretion to require a separate license when

necessary in furtherance of the security and foreign policy of the United States.

The principal articles envisaged for the special regime are: (1) The supply of satellite components, parts, systems, attachments, accessories and associated technical data, including for off-shore procurement; and, (2) technical information needed to respond to bids, to requests for quotations, plant visits, acceptance testing of equipment and the like. Technical data for satellite insurance purposes, including for on-orbit anomalies, involving exports to insurance firms and their brokers and consultants located within the territories of U.S. allies has also been discussed extensively within DTAG and will be the subject of separate, informal guidelines not requiring an amendment to the ITAR.

Exports of complete commercial communications satellites for sale to, or launch by, U.S. allies have been proceeding expeditiously consistent with the Department of State's January 1999 report to Congress concerning implementation of the Strom Thurmond National Defense Authorization Act for Fiscal Year 1999. Such exports invariably involve contracts of $50 million or more, requiring notification to Congress pursuant to section 36(c) of the Arms Export Control Act before an export license may be issued. As such, these exports do not lend themselves to the special regime provided for herein and no rule change to that effect is being undertaken at this time. As suggested in the referenced report, the Department of State and the interested Committees of Congress have used all appropriate opportunities to ensure that U.S. aerospace companies are able to meet contract deadlines and launch schedules consistent with the security and foreign policy of the United States. The details of communications satellite notifications to Congress that have taken place since March 15, 1999, are available on the Website of the Office of Defense Trade Controls (HYPERLINK http://www.pmdtc.org.).

In carrying out this directive Part 123, Licenses for the Export of Defense Articles is being amended.

This amendment involves a foreign affairs function of the United States and therefore, is not subject to the procedures required by 5 U.S.C. 553 and 554. It is exempt from review under Executive Order 12866 but has been reviewed internally by the Department to ensure consistency with the purposes thereof. This rule does not require analysis under the Regulatory Flexibility Act or the Unfunded Mandates Reform Act. It has been found to be a minor rule within the meaning of the Small Business Regulatory Enforcement Act of 1966. It will not have substantial direct effects on the States, the relationship between the National Government and the States, or on the distribution of power and responsibilities among the various levels of government. Therefore, in accordance with § 6 of Executive Order 13132, it is determined that this rule does not have sufficient federalism implications to warrant application of Executive Order Nos. 12372 and 13123. However, interested parties are invited to submit written comments to the Department of State, Office of Defense Trade Controls, ATTN: Regulatory Change, Part 123—Commercial Communications Satellites Components, Systems, Parts, and Accessories, 13th Floor, Room H1304, SA–1, Washington, D.C. 20520–0113. Such persons must be so registered with the Department's Office of Defense Trade Controls (ODTC) pursuant to the registration requirements of § 38 of the Arms Export Control Act.

List of Subjects in 22 CFR Part 123

Arms and munitions, Exports.

Accordingly, for the reasons set forth above, Title 22, Chapter I, Subchapter M, Part 123, is amended as follows:

PART 123—LICENSES FOR THE EXPORT OF DEFENSE ARTICLES

1. The authority citation for Part 123 is revised to read as follows:

Authority: Secs. 2, 38, and 71, Pub.L. 90–629, 90 Stat. 744 (22 U.S.C. 2752, 2778, 2797); 22 U.S.C. 2753; E.O. 11958, 42 FR 4311; 3 CFR, 1977 Comp. p. 79; 22 U.S.C. 2658; Pub L. 105–261.

2. Section 123.27 is revised to read as follows:

§ 123.27. Special licensing regime for export to U.S. allies of commercial communications satellite components, systems, parts, accessories, attachments and associated technical data.

(a) U.S. persons engaged in the business of exporting specifically designed or modified components, systems, parts, accessories, attachments, associated equipment and certain associated technical data for commercial communications satellites, and who are so registered with the Office of Defense Trade Controls pursuant to part 122 of this subchapter, may submit license applications for multiple permanent and temporary exports and temporary imports of such articles for expeditious consideration without meeting the documentary requirements of § 123.1(c)(4) and (5) concerning purchase orders, letters of intent, contracts and non-transfer and end use certificates, or the documentary requirements of § 123.9, concerning approval of re-exports or re-transfers, when all of the following requirements are met:

(1) The proposed exports or re-exports concern exclusively one or more countries of the North Atlantic Treaty Organization (Belgium, Canada, Czech Republic, Denmark, France, Germany, Greece, Hungary, Iceland, Italy, Luxembourg, The Netherlands, Norway, Poland, Portugal, Spain, Turkey, United Kingdom and United States) and/or one or more countries which have been designated in accordance with section 517 of the Foreign Assistance Act of 1961 as a major non-NATO ally (and as defined further in section 644(q) of that Act) for purposes of that Act and the Arms Export Control Act (Argentina, Australia, Egypt, Israel, Japan, Jordan, New Zealand and Republic of Korea).

(2) The proposed exports concern exclusively one or more foreign persons (*e.g.,* companies or governments) located within the territories of the countries identified in paragraph (a)(1) of this section, and one or more commercial communications satellite programs included within a list of such persons and programs approved by the U.S. Government for purposes of this section, as signified in a list of such persons and programs that will be publicly available through the Internet Website of the Office of Defense Trade Controls and by other means.

(3) The articles are not major defense equipment sold under a contract in the amount of $14,000,000 or more or defense articles or defense services sold under a contract in the amount of $50,000,000 or more (for which purpose, as is customary, exporters may not split contracts or purchase orders). Items meeting these statutory thresholds must be submitted on a separate license application to permit the required notification to Congress pursuant to section 36(c) of the Arms Export Control Act.

(4) The articles are not detailed design, development, manufacturing or production data and do not involve the manufacture abroad of significant military equipment.

(5) The U.S. exporter reports complete shipment information to the Office of Defense Trade Controls within 15 days of shipment in accordance with section 1302 of the Foreign Relations Authorization Act for Fiscal Years 2000 and 2001, and at that time meets the documentary requirements of § 123.1(c)(4) and (5), the documentary requirements of § 123.9 in the case of re-exports or re-transfers, and, other documentary requirements that may be imposed as a condition of a license (*e.g.*, parts control plans for MTCR-controlled items). The shipment information reported must include a description of the item and quantity, value, port of exit and end user and country of destination of the item.

(6) At any time in which an item exported pursuant to this section is proposed for re-transfer outside of the approved territory, programs or persons (*e.g.,* such as in the case of an item included in a satellite for launch beyond the approved territory), the detailed requirements of § 123.9 apply with regard to

obtaining the prior written consent of the Office of Defense Trade Controls.

(b) The re-export or re-transfer of the articles authorized for export (including to specified re-export destinations) in accordance with this section do not require the separate prior written approval of the Office of Defense Trade Controls provided all of the requirements in paragraph (a) of this section are met.

(c) The Office of Defense Trade Controls will consider, on a case-by-case basis, requests to include additional foreign companies and satellite programs within the geographic coverage of a license application submitted pursuant to this section from countries not otherwise covered, who are members of the European Space Agency or the European Union. In no case, however, can the provisions of this section apply or be relied upon by U.S. exporters in the case of countries who are subject to the mandatory requirements of section 1514 of the Strom Thurmond National Defense Authorization Act for Fiscal Year 1999, concerning national security controls on satellite export licensing.

(d) Registered U.S. exporters may request at the time of a license application submitted pursuant to this section that additional foreign persons or communications satellite programs be added to the lists referred to in paragraph (a)(2) of this section, which additions, if approved, will be included within the publicly available lists of authorized recipients and programs.

Dated: May 16, 2000.

Eric D. Newsom,

Assistant Secretary, Bureau of Political-Military Affairs, U.S. Department of State.

[FR Doc. 00–13329 Filed 5–25–00; 8:45 am]

BILLING CODE 4710–25–P

DEPARTMENT OF THE INTERIOR

Office of Surface Mining Reclamation and Enforcement

30 CFR Part 914

[SPATS No. IN–147–FOR]

Indiana Regulatory Program

AGENCY: Office of Surface Mining Reclamation and Enforcement, Interior.

ACTION: Final rule; approval of amendment.

SUMMARY: The Office of Surface Mining Reclamation and Enforcement (OSM) is approving an amendment to the Indiana regulatory program (Indiana program) under the Surface Mining Control and Reclamation Act of 1977 (SMCRA). Indiana proposed revisions to its statutes that would allow the use of money from its post-1977 abandoned mine reclamation fund, under specified circumstances, to replace domestic water supplies disrupted or affected by surface coal mining and reclamation operations. Indiana intends to revise its program in order to provide additional protection to society and the environment from the adverse effects of surface coal mining operations.

EFFECTIVE DATE: May 26, 2000.

FOR FURTHER INFORMATION CONTACT: Andrew R. Gilmore, Director, Indianapolis Field Office, Office of Surface Mining, Minton-Capehart Federal Building, 575 North Pennsylvania Street, Room 301, Indianapolis, Indiana 46204–1521. Telephone (317) 226–6700. Internet: INFOMAIL@indgw.osmre.gov.

SUPPLEMENTARY INFORMATION:

I. Background on the Indiana Program
II. Submission of the Amendment
III. Director's Findings
IV. Summary and Disposition of Comments
V. Director's Decision
VI. Procedural Determinations

I. Background on the Indiana Program

On July 29, 1982, the Secretary of the Interior conditionally approved the Indiana program. You can find background information on the Indiana program, including the Secretary's findings, the disposition of comments, and the conditions of approval in the July 26, 1982 **Federal Register** (47 FR 32107). You can find later actions on the Indiana program at 30 CFR 914.10, 914.15, 914.16, and 914.17.

II. Submission of the Amendment

By letter dated February 25, 2000 (Administrative Record No. IND–1686), the Indiana Department of Natural Resources (department) sent us an amendment to its program under SMCRA and the Federal regulations at 30 CFR 732.17(b). The department sent the amendment at its own initiative. The amendment concerns revisions to the Indiana Surface Coal Mining and Reclamation Act at Indiana Code (IC) 14–34–6–15. The revisions made to IC 14–34–6–15 will allow the department to use money from its post-1977 abandoned mine reclamation fund to replace domestic water supplies disrupted or affected by surface coal mining and reclamation operations.

We announced receipt of the amendment in the March 9, 2000, **Federal Register** (65 FR 12492). In the same document, we opened the public comment period and provided an opportunity for a public hearing or meeting on the adequacy of the amendment. The public comment period closed on April 10, 2000. Because no one requested a public hearing or meeting, we did not hold one.

III. Director's Findings

Following, under SMCRA and the Federal regulations at 30 CFR 732.15 and 732.17, are our findings concerning the amendment.

IC 14–34–6–15 Abandoned Mine Reclamation Fund

Indiana revised IC 14–34–6–15(b) and (c) to read as follows:

(b) The post-1977 abandoned mine reclamation fund is established. The fund consists of bond forfeiture money collected under section 16 of this chapter and the civil penalties described in IC 14–34–16–9. The fund may be used as follows:

(1) To effect the restoration of land not otherwise eligible for federal funding on which there has been surface mining activity after August 3, 1977.

(2) To replace domestic water supplies disrupted or affected by a surface coal mining and reclamation operation, including the disposal of coal combustion waste (as defined in IC 13–19–3–3), where the surface coal mining and reclamation operation has been completed and is no longer subject to IC 14–34.

The money held for this purpose may not exceed an amount established by the department that is sufficient to enable the director to cover the anticipated cost of restoration.

(c) At least five hundred thousand dollars ($500,000) in the fund is dedicated as collateral for the bond pool under IC 14–34–8 and may not be used for the restoration of land or replacement of water described in subsection (b).

Indiana's post-1977 abandoned mine reclamation fund (fund) consists of both bond forfeiture and civil penalty monies. However, only the monies collected for civil penalties may be used for the purposes specified in IC 14–34–6–15(b). Under IC 14–34–6–16(f), the bond forfeiture monies are to be used solely for the purpose of reclaiming the forfeiture sites to which the bonds apply. Under IC 14–34–6–16(d), any excess forfeited bond money must be returned to the person from whom the amount was received. Under IC 14–34–6–15(b)(1), the civil penalty money in the fund may be used to restore land affected by surface mining activity after August 3, 1977, if the land is not eligible for Federal funding. Under the new provision at IC 14–34–6–15(b)(2), the civil penalty money in the fund may be used to replace domestic water supplies disrupted or affected by a surface coal mining and reclamation operation, if the operation is completed and is no longer subject to the requirements of the Indiana program under IC 14–34. Indiana revised its exception provision at IC 14–34–6–15(c) to clarify that the $500,000 that is dedicated as collateral for the Indiana bond pool may not be

used for replacement of water. The Federal regulation at 30 CFR 845.21(a) authorizes the expenditure of money collected from the assessment of civil penalties under section 518 of SMCRA for reclamation of lands adversely affected by coal mining practices after August 3, 1977. The Federal regulation is silent regarding the use of Federal civil penalty money to replace domestic water supplies. However, section 518(i) of SMCRA does not place conditions on the use of money collected by the States from the assessment of civil penalties. Nor is there a requirement in SMCRA or the Federal regulations that State programs include rules comparable to 30 CFR 845.21. Therefore, we find that Indiana's revised statutory requirements at IC 14–34–6–15(b) and (c) are not inconsistent with the requirements of section 518(i) of SMCRA or the Federal regulations at 30 CFR 845.21. We are approving the proposed revisions to IC 14–34–6–15.

IV. Summary and Disposition of Comments

Federal Agency Comments

On March 2, 2000, under section 503(b) of SMCRA and 30 CFR 732.17(h)(11)(i) of the Federal regulations, we requested comments on the amendment from various Federal agencies with an actual or potential interest in the Indiana program (Administrative Record No. IND–1688). We did not receive any comments.

Environmental Protection Agency (EPA)

Under 30 CFR 732.17(h)(11)(ii), we are required to obtain the written concurrence of the EPA for those provisions of the program amendment that relate to air or water quality standards issued under the authority of the Clean Water Act (33 U.S.C. 1251 *et seq.*) or the Clean Air Act (42 U.S.C. 7401 *et seq.*). None of the revisions that Indiana proposed to make in this amendment pertain to air or water quality standards. Therefore, we did not ask the EPA for its concurrence.

On March 2, 2000, under 30 CFR 732.17(h)(11)(i), we requested comments on the amendment from the EPA (Administrative Record No. IND–1688). The EPA did not respond to our request.

State Historical Preservation Officer (SHPO) and the Advisory Council on Historic Preservation (ACHP)

Under 30 CFR 732.17(h)(4), we are required to request comments from the SHPO and ACHP for amendments that may have an effect on historic properties. On March 2, 2000, we requested comments on Indiana's amendment (Administrative Record No. IND–1688), but neither responded to our request.

Public Comments

OSM requested public comments on the proposed amendment, but did not receive any.

V. Director's Decision

Based on the above findings, we approve the amendment as sent to us by Indiana on February 25, 2000.

To implement this decision, we are amending the Federal regulations at 30 CFR Part 914, which codify decisions concerning the Indiana program. We are making this final rule effective immediately to expedite the State program amendment process and to encourage Indiana to bring its program into conformity with the Federal standards. SMCRA requires consistency of State and Federal standards.

VI. Procedural Determinations

Executive Order 12866—Regulatory Planning and Review

This rule is exempted from review by the Office of Management and Budget under Executive Order 12866.

Executive Order 12630—Takings

This rule does not have takings implications. This determination is based on the analysis performed for the counterpart Federal regulations.

Executive Order 13132—Federalism

This rule does not have federalism implications. SMCRA delineates the roles of the Federal and State governments with regard to the regulation of surface coal mining and reclamation operations. One of the purposes of SMCRA is to ''establish a nationwide program to protect society and the environment from the adverse effects of surface coal mining operations.'' Section 503(a)(1) of SMCRA requires that State laws regulating surface coal mining and reclamation operations be ''in accordance with'' the requirements of SMCRA, and section 503(a)(7) requires that State programs contain rules and regulations ''consistent with'' regulations issued by the Secretary under SMCRA.

Executive Order 12988—Civil Justice Reform

The Department of the Interior has conducted the reviews required by section 3 of Executive Order 12988 and has determined that, to the extent allowed by law, this rule meets the applicable standards of subsections (a) and (b) of that section. However, these standards are not applicable to the actual language of State regulatory programs and program amendments since each such program is drafted and promulgated by a specific State, not by OSM. Under sections 503 and 505 of SMCRA (30 U.S.C. 1253 and 1255) and 30 CFR 730.11, 732.15, and 732.17(h)(10), decisions on proposed State regulatory programs and program amendments submitted by the States must be based solely on a determination of whether the submittal is consistent with SMCRA and its implementing Federal regulations and whether the other requirements of 30 CFR Parts 730, 731, and 732 have been met.

National Environmental Policy Act

Section 702(d) of SMCRA (30 U.S.C. 1292(d)) provides that a decision on a proposed State regulatory program provision does not constitute a major Federal action within the meaning of section 102(2)(C) of the National Environmental Policy Act (NEPA) (42 U.S.C. 4332(2)(C)). A determination has been made that such decisions are categorically excluded from the NEPA process (516 DM 8.4.A).

Paperwork Reduction Act

This rule does not contain information collection requirements that require approval by the Office of Management and Budget under the Paperwork Reduction Act (44 U.S.C. 3507 *et seq.*).

Regulatory Flexibility Act

The Department of the Interior has determined that this rule will not have a significant economic impact on a substantial number of small entities under the Regulatory Flexibility Act (5 U.S.C. 601 *et seq.*). The State submittal which is the subject of this rule is based upon counterpart Federal regulations for which an economic analysis was prepared and certification made that such regulations would not have a significant economic effect upon a substantial number of small entities. Accordingly, this rule will ensure that existing requirements previously promulgated by OSM will be implemented by the State. In making the determination as to whether this rule would have a significant economic impact, the Department relied upon the data and assumptions for the counterpart Federal regulations.

Small Business Regulatory Enforcement Fairness Act

This rule is not a major rule under 5 U.S.C. 804(2), the Small Business

Regulatory Enforcement Fairness Act. This rule:

a. Does not have an annual effect on the economy of $100 million.

b. Will not cause a major increase in costs or prices for consumers, individual industries, federal, state, or local government agencies, or geographic regions.

c. Does not have significant adverse effects on competition, employment, investment, productivity, innovation, or the ability of U.S. based enterprises to compete with foreign-based enterprises.

This determination is based upon the fact that the State submittal which is the subject of this rule is based upon counterpart Federal regulations for which an analysis was prepared and a determination made that the Federal regulation was not considered a major rule.

Unfunded Mandates

This rule will not impose a cost of $100 million or more in any given year on any governmental entity or the private sector.

List of Subjects in 30 CFR Part 914

Intergovernmental relations, Surface mining, Underground mining.

Dated: May 12, 2000.

Charles E. Sandberg,

Acting Regional Director, Mid-Continent Regional Coordinating Center.

For the reasons set out in the preamble, 30 CFR Part 914 is amended as set forth below:

PART 914—INDIANA

1. The authority citation for Part 914 continues to read as follows:

Authority: 30 U.S.C. 1201 *et seq.*

2. Section 914.15 is amended in the table by adding a new entry in chronological order by ''Date of final publication'' to read as follows:

§ 914.15 Approval of Indiana regulatory program amendments.

* * * * *

Original amendment submission date	Date of final publication	Citation/description
* *	* * *	* *
February 25, 2000	May 26, 2000	IC 14–34–6–15(b) and (c).

[FR Doc. 00–13246 Filed 5–25–00; 8:45 am]

BILLING CODE 4310–05–P

DEPARTMENT OF THE INTERIOR

Office of Surface Mining Reclamation and Enforcement

30 CFR Part 936

[SPATS No. OK–027–FOR]

Oklahoma Regulatory Program

AGENCY: Office of Surface Mining Reclamation and Enforcement (OSM), Interior.

ACTION: Final rule; approval of amendment.

SUMMARY: OSM is approving an amendment to the Oklahoma regulatory program (Oklahoma program) under the Surface Mining Control and Reclamation Act of 1977 (SMCRA). Oklahoma proposed revisions and additions to its regulations concerning restrictions on the financial interests of State employees. Specifically, the amendment concerns the authority of the Director of the Department of Mines, where to file statements of financial interests, what to report on such statements, and resolving prohibited interests. Oklahoma intends to clarify the responsibilities of the Director of the Oklahoma Department of Mines, advisory board members, commissions, and employees regarding restriction on the financial interests of State employees.

EFFECTIVE DATE: May 26, 2000.

FOR FURTHER INFORMATION CONTACT: Michael C. Wolfrom, Director, Tulsa Field Office, Office of Surface Mining, 5100 East Skelly Drive, Suite 470, Tulsa, Oklahoma 74135–6548. Telephone: (918) 581–6430. Internet: mwolfrom@tokgw.osmre.gov.

SUPPLEMENTARY INFORMATION:

I. Background on the Oklahoma Program
II. Submission of the Amendment
III. Director's Findings
IV. Summary and Disposition of Comments
V. Director's Decision
VI. Procedural Determinations

I. Background on the Oklahoma Program

On January 19, 1981, the Secretary of the Interior conditionally approved the Oklahoma program. You can find background information on the Oklahoma program, including the Secretary's findings, the disposition of comments, and the conditions of approval in the January 19, 1981, **Federal Register** (46 FR 4902). You can find later actions concerning the Oklahoma program at 30 CFR 936.15 and 936.16.

II. Submission of the Proposed Amendment

By letter dated January 13, 2000 (Administrative Record No. OK–985.01), Oklahoma sent us an amendment to its approved regulatory program under the Federal regulations at 732.17(b). Oklahoma sent the amendment in response to our letter dated December 6, 1999 (Administrative Record No. OK–985), that we sent to Oklahoma concerning regulation changes in its program that we did not approve. Oklahoma proposed to amend the Oklahoma Administrative Code (OAC). We announced receipt of the amendment in the March 31, 2000, **Federal Register** (65 FR 17213). In the same document, we opened the public comment period and provided an opportunity for a public hearing or meeting on the adequacy of the amendment. The public comment period closed on May 1, 2000. Because no one requested a public hearing or meeting, we did not hold one.

III. Director's Findings

Following, under SMCRA and the Federal regulations at 30 CFR 732.15 and 732.17, are our findings concerning the amendment to the Oklahoma permanent regulatory program.

Any revisions that we do not discuss below are about misspelled words, minor wording changes, or revised cross-references and paragraph notations to reflect organizational changes resulting from this amendment.

A. OAC 460:20–5–3. Authority

Oklahoma proposed to add a new paragraph (4) to read as follows:

> File all statements and supplements received pursuant to 45 O.S. Supp. 1980, Section 765, from members of advisory boards and the Oklahoma Mining Commission with the Oklahoma Governor's Office, Director of Appointments.

This paragraph authorizes the Director of the Oklahoma Department of

Mines to file with the Oklahoma Governor's Office, Director of Appointments all statements and supplements received according to 45 O.S. Supp. 1980, Section 765 from members of advisory boards and the Oklahoma Mining Commission. We are approving this addition because the federal regulations at 30 CFR 705.3(b) allow the state regulatory authority to expand the provisions of 30 CFR Part 705—Restrictions on Financial Interests of State Employees, in order to meet the particular needs within the State and because the addition is not inconsistent with the federal regulations. However, in a letter dated March 29, 2000 (Administrative Record No. OK–985.05), we notified Oklahoma that the reference to Section 765 should be Section 767. We advised the state to make this reference correction in a future rulemaking.

B. OAC 460:20–5–9. Where To File

Previously, the Director of the Oklahoma Department of Mines was to file his or her statement with the Director of OSM. Also, all other employees and members of advisory boards and commissions representing multiple interests, as provided in Section 460:20–5–7, were to file their statements with the Director of the Oklahoma Department of Mines or such other official as may be designated by state law or regulation. The Director of the Oklahoma Department of Mines will continue to file his or her statement with the Director of OSM. Oklahoma proposed to have members of advisory boards and commissions representing multiple interests, as provided in Section 460:20–5–7, file their statements with the Governor's Office, Director of Appointments, or such other official as may be designated by state law or regulation. The state also proposed to have all other employees file their statement with the Director of the Oklahoma Department of Mines according to the requirements of 45 O.S. Supp. 786 and 460:20–5. We are approving these changes because they meet the requirements of 30 CFR 705.15 which states that all employees (except the head of the state regulatory authority) and members of advisory boards and commissions representing multiple interests must file their statements with the head of the state regulatory authority or such other official as may be designated by state law or regulation. However, in a letter dated March 29, 2000 (Administrative Record No. OK–985.05), we notified Oklahoma that the reference to Section 786 should be Section 767. We advised the state to make this reference correction in a future rulemaking.

C. OAC 460:20–5–10. What To Report

Oklahoma proposed to revise paragraph (c)(3) to read as follows:

(3) The exceptions shown in the employee certification of the form must provide enough information for the Director of the Department or the Governor's Office, Director of Appointments, for Commission members, to determine the existence of a direct or indirect financial interest. Accordingly, the exceptions should:

Oklahoma proposed to clarify that the Director of the Oklahoma Department of Mines is responsible for determining the existence of a direct or indirect financial interest for employees and that the Governor's Office, Director of Appointments, is responsible for making the same type of determination for Commission members. We are approving this amendment because it is consistent with 30 CFR 705.17(c)(3).

IV. Summary and Disposition of Comments

Federal Agency Comments

On March 22, 2000, under section 503(b) of SMCRA and 30 CFR 732.17(h)(11)(i) of the Federal regulations, we requested comments from various Federal agencies with an actual or potential interest in the Oklahoma amendment (Administrative Record No. OK–985.04). The U.S. Army Corps of Engineers responded on April 17, 2000 (Administrative Record No. OK–985.08), that it found the proposed amendment to be satisfactory.

Environmental Protection Agency (EPA)

Under 30 CFR 732.17(h)(11)(ii), we are required to get a written agreement from the EPA for those provisions of the proposed program amendment that relate to air or water quality standards promulgated under the authority of the Clean Water Act (33 U.S.C. 1251 *et seq.*) or the Clean Air Act (42 U.S.C. 7401 *et seq.*). None of the revisions that Oklahoma proposed to make in this amendment pertain to air or water quality standards. Therefore, we did not ask the EPA to agree on the amendment.

Under 30 CFR 732.17(h)(11)(i), we requested comments on the amendment from the EPA on March 22, 2000 (Administrative Record No. OK–985.02). The EPA did not respond to our request.

State Historical Preservation Officer (SHPO) and the Advisory Council on Historic Preservation (ACHP)

Under 30 CFR 732.17(h)(4), we are required to request comments from the SHPO and ACHP on amendments that may have an effect on historic properties. On March 22, 2000, we requested comments on Oklahoma's amendment (Administrative Record No. OK–985.03), but neither responded to our request.

Public Comments

We requested public comments on the amendment, but did not receive any.

V. Director's Decision

Based on the above findings, we approve the amendment as sent to us by Oklahoma on January 13, 2000. To implement this decision, we are amending the Federal regulations at 30 CFR Part 936, which codify decisions concerning the Oklahoma program. We are making this final rule effective immediately to expedite the State program amendment process and to encourage Oklahoma to bring its program into conformity with the Federal standards. SMCRA requires consistency of State and Federal standards.

VI. Procedural Determinations

Executive Order 12866—Regulatory Planning and Review

This rule is exempted from review by the Office of Management and Budget (OMB) under Executive Order 12866.

Executive Order 12630—Takings

This rule does not have takings implications. This determination is based on the analysis performed for the counterpart federal regulation.

Executive Order 13132—Federalism

This rule does not have federalism implications. SMCRA delineates the roles of the federal and state governments with regard to the regulation of surface coal mining and reclamation operations. One of the purposes of SMCRA is to ''establish a nationwide program to protect society and the environment from the adverse effects of surface coal mining operations.'' Section 503(a)(1) of SMCRA requires that state laws regulating surface coal mining and reclamation operations be ''in accordance with'' the requirements of SMCRA, and section 503(a)(7) requires that state programs contain rules and regulations ''consistent with'' regulations issued by the Secretary under SMCRA.

Executive Order 12988—Civil Justice Reform

The Department of the Interior has conducted the reviews required by section 3 of Executive Order 12988 and has determined that, to the extent allowed by law, this rule meets the

applicable standards of subsections (a) and (b) of that section. However, these standards are not applicable to the actual language of state regulatory programs and program amendments since each program is drafted and promulgated by a specific state, not by OSM. Under sections 503 and 505 of SMCRA (30 U.S.C. 1253 and 1255) and 30 CFR 730.11, 732.15, and 732.17(h)(10), decisions on proposed state regulatory programs and program amendments submitted by the states must be based solely on a determination of whether the submittal is consistent with SMCRA and its implementing federal regulations and whether the other requirements of 30 CFR Parts 730, 731, and 732 have been met.

National Environmental Policy Act

Section 702(d) of SMCRA (30 U.S.C. 1292(d)) provides a decision on a proposed state regulatory program provision does not constitute major federal action within the meaning of section 102(2)(C) of the National Environmental Policy Act (42 U.S.C. 4332(2)(C)). A determination has been made that such decisions are categorically excluded from the NEPA process (516 DM 8.4.A).

Paperwork Reduction Act

This rule does not contain information collection requirements that require approval by OMB under the Paperwork Reduction Act (44 U.S.C. 3507 *et seq.*).

Regulatory Flexibility Act

The Department of the Interior has determined that this rule will not have a significant economic impact on a substantial number of small entities under the Regulatory Flexibility Act (5 U.S.C. 601 *et seq.*). The state submittal which is the subject of this rule is based upon counterpart federal regulations for which an economic analysis was prepared and certification made that such regulations would not have a significant economic effect upon a substantial number of small entities. Therefore, this rule will ensure that existing requirements previously promulgated by OSM will be implemented by the state. In making the determination as to whether this rule would have a significant economic impact, the Department relied upon the data and assumptions for the counterpart federal regulations.

Small Business Regulatory Enforcement Fairness Act

This rule is not a major rule under 5 U.S.C. 804(2), the Small Business Regulatory Enforcement Fairness Act. This rule:

a. Does not have an annual effect on the economy of $100 million.

b. Will not cause a major increase in costs or prices for consumers, individual industries, federal, state, or local government agencies, or geographic regions.

c. Does not have significant adverse effects on competition, employment, investment, productivity, innovation, or the ability of U.S. based enterprises to compete with foreign-based enterprises.

This determination is based upon the fact that the state submittal which is the subject of this rule is based upon counterpart federal regulations for which an analysis was prepared and a determination made that the federal regulation was not considered a major rule.

Unfunded Mandates

This rule will not impose a cost of $100 million or more in any given year on any governmental entity or the private sector.

List of Subjects in 30 CFR Part 936

Intergovernmental relations, Surface mining, Underground mining.

Dated: May 11, 2000.

Richard J. Seibel,

Acting Regional Director, Mid-Continent Regional Coordinating Center.

For the reasons set out in the preamble, 30 CFR Part 936 is amended as set forth below:

PART 936—OKLAHOMA

1. The authority citation for Part 936 continues to read as follows:

Authority: 30 U.S.C. 1201 *et seq.*

2. Section 936.15 is amended in the table by adding a new entry in chronological order by ''Date of final publication'' to read as follows:

§ 936.15 Approval of Oklahoma regulatory program amendments.

* * * * *

Original amendment submission date	Date of final publication	Citation/description
* *	* * *	* *
January 13, 2000	May 26, 2000	OAC 460:20–5–3(4); 20–5–9(a)–(c); 20–5–10(c)(3); 20–5–12(b)(1).

[FR Doc. 00–13247 Filed 5–25–00; 8:45 am]

BILLING CODE 4310–05–P

POSTAL SERVICE

39 CFR Part 20

Priority Mail Global Guaranteed

AGENCY: Postal Service.

ACTION: Amendment to interim rule.

SUMMARY: The Postal Service is amending the interim rule on Priority Mail Global Guaranteed service to extend service to most countries in the world and to create rate groups for these countries to reflect the cost associated with providing this service.

EFFECTIVE DATE: May 28, 2000. Comments on the amendment to the interim rule must be received on or before June 26, 2000.

ADDRESSES: Written comments should be mailed or delivered to the Manager, Business Results, International Business, U.S. Postal Service, 475 L'Enfant Plaza SW, Room 370–IBU, Washington, DC 20260–6500. Copies of all written comments will be available for public inspection between 9 a.m. and 4 p.m., Monday through Friday, in International Business, 10th Floor, 901 D Street SW, Washington, DC.

FOR FURTHER INFORMATION CONTACT: Walter J. Grandjean, (202) 314–7256.

SUPPLEMENTARY INFORMATION: On April 19, 1999, the Postal Service announced in the **Federal Register** (62 FR 19039–19042) the introduction of Priority Mail Global Guaranteed on an interim basis.

The U.S. Postal Service, through an alliance with DHL Worldwide Express Inc., is offering an enhanced expedited service, Priority Mail Global Guaranteed, from selected locations in the United States to selected countries. This service offers day-certain delivery with postage refund guarantee and document reconstruction coverage of $100 for allowable contents.

On November 4, 1999, the Postal Service announced in the **Federal Register** (64 FR 60106–60109) an amendment to the interim rule to add more U.S. acceptance locations and to extend the service to more destination countries. Public comments were requested by December 6, 1999, and by that date two comments were received. Both comments related to the way in which the Postal Service categorized the U.S. acceptance offices and how the acceptance offices were selected.

The acceptance offices were selected on their ability to meet the stringent service standards for this service based on local considerations such as timely transportation, mail processing capabilities, and access to national transportation.

The presentation of acceptance offices has been changed. ZIP Code ranges can overlap metropolitan areas and state boundaries. Accordingly, the chart of acceptance offices has been changed to delete the reference to metropolitan areas and only state names are used as a guide to determining where service is available. The use of state designations is not meant to limit service within the specified ZIP Code ranges, since they are intended only to serve as a guide to the areas that offer Priority Mail Global Guaranteed service.

The Postal Service is now extending service to more countries and redesigning the rates to reflect the cost of providing service to these additional countries. Service will be available to all country destinations listed in the International Mail Manual except Afghanistan, Ascension, China, Iraq, Japan, Democratic People's Republic of Korea (North), Libya, Pitcairn Island, Saint Helena, Sudan, and Tristan de Cunha.

Although each network country has been placed into one of eight rate groups, rate groups 1 and 2, 3 and 7, and 4 and 6, respectively, contain duplicate rates at the present time. The applicable rates and the destination countries that are associated with each rate group are as follows:

Weight not over (lbs.)	Rate Groups 1 and 2 (Canada, Mexico, and St. Pierre & Miquelon)	Rate Groups 3 and 7	Rate Groups 4 and 6	Rate Group 5	Rate Group 8
0.5	$20.00	$24.00	$29.00	$40.00	$60.00
1	31.00	34.00	41.00	51.00	72.00
2	31.00	34.00	41.00	65.00	87.00
3	42.00	53.00	60.00	80.00	102.00
4	44.00	60.00	67.00	94.00	115.00
5	47.00	66.00	74.00	107.00	129.00
6	50.00	71.00	81.00	119.00	141.00
7	53.00	76.00	88.00	131.00	153.00
8	56.00	81.00	95.00	142.00	165.00
9	59.00	85.00	102.00	154.00	176.00
10	62.00	89.00	109.00	166.00	188.00
11	64.00	93.00	114.00	177.00	200.00
12	66.00	98.00	120.00	187.00	212.00
13	69.00	102.00	125.00	197.00	224.00
14	72.00	106.00	131.00	207.00	235.00
15	74.00	110.00	136.00	215.00	246.00
16	77.00	114.00	141.00	223.00	258.00
17	79.00	118.00	147.00	230.00	269.00
18	82.00	121.00	152.00	238.00	280.00
19	84.00	125.00	158.00	245.00	292.00
20	87.00	128.00	163.00	253.00	303.00
21	89.00	132.00	168.00	260.00	313.00
22	91.00	136.00	173.00	268.00	322.00
23	94.00	139.00	178.00	275.00	332.00
24	96.00	143.00	183.00	283.00	341.00
25	98.00	146.00	188.00	290.00	349.00
26	100.00	149.00	193.00	298.00	358.00
27	103.00	153.00	198.00	305.00	366.00
28	105.00	156.00	203.00	313.00	375.00
29	107.00	160.00	208.00	320.00	384.00
30	110.00	163.00	213.00	328.00	392.00
31	112.00	167.00	218.00	335.00	401.00
32	114.00	170.00	223.00	343.00	410.00
33	116.00	174.00	228.00	350.00	418.00
34	119.00	177.00	233.00	358.00	427.00
35	121.00	181.00	238.00	365.00	435.00
36	123.00	184.00	243.00	373.00	444.00
37	125.00	188.00	248.00	380.00	453.00
38	128.00	191.00	253.00	388.00	461.00
39	130.00	195.00	258.00	395.00	470.00
40	132.00	198.00	263.00	403.00	479.00
41	133.00	202.00	268.00	410.00	487.00
42	135.00	205.00	273.00	418.00	496.00
43	137.00	209.00	278.00	425.00	505.00
44	138.00	212.00	283.00	433.00	514.00
45	140.00	216.00	288.00	440.00	522.00
46	142.00	219.00	293.00	448.00	531.00
47	143.00	223.00	298.00	455.00	540.00
48	145.00	226.00	303.00	463.00	548.00

Weight not over (lbs.)	Rate Groups 1 and 2 (Canada, Mexico, and St. Pierre & Miquelon)	Rate Groups 3 and 7	Rate Groups 4 and 6	Rate Group 5	Rate Group 8
49	147.00	230.00	308.00	470.00	557.00
50	148.00	233.00	313.00	478.00	566.00
51	148.00	233.00	313.00	478.00	566.00
52	152.00	240.00	323.00	492.00	583.00
53	152.00	240.00	323.00	492.00	583.00
54	154.00	247.00	333.00	505.00	601.00
55	154.00	247.00	333.00	505.00	601.00
56	156.00	254.00	343.00	516.00	617.00
57	156.00	254.00	343.00	516.00	617.00
58	159.00	261.00	353.00	527.00	633.00
59	159.00	261.00	353.00	527.00	633.00
60	161.00	268.00	363.00	538.00	649.00
61	161.00	268.00	363.00	538.00	649.00
62	164.00	275.00	373.00	549.00	666.00
63	164.00	275.00	373.00	549.00	666.00
64	166.00	282.00	383.00	560.00	684.00
65	166.00	282.00	383.00	560.00	684.00
66	168.00	289.00	393.00	571.00	701.00
67	168.00	289.00	393.00	571.00	701.00
68	171.00	296.00	403.00	583.00	718.00
69	171.00	296.00	403.00	583.00	718.00
70	173.00	303.00	413.00	594.00	735.00

Country	Rate group
Afghanistan	(1)
Albania	8
Algeria	8
Andorra	8
Angola	8
Anguilla	7
Antigua & Barbuda	7
Argentina	5
Armenia	8
Aruba	7
Ascension	(1)
Australia	4
Austria	3
Azerbaijan	8
Bahamas	7
Bahrain	6
Bangladesh	8
Barbados	7
Belarus	8
Belgium	3
Belize	5
Benin	8
Bermuda	7
Bhutan	8
Bolivia	5
Bosnia-Herzegovina	8
Botswana	8
Brazil	5
British Virgin Islands	7
Brunei Darussalam	8
Bulgaria	8
Burkina Faso	8
Burma (Myanmar)	8
Burundi	8
Cambodia	8
Cameroon	8
Canada	1
Cape Verde	8
Cayman Islands	7
Central African Republic	8
Chad	8
Chile	5
China	(1)
Colombia	5
Comoros	8
Congo, Democratic Republic of the	8
Congo, Republic of the	8
Costa Rica	5
Cote d'Ivoire (Ivory Coast)	8
Croatia	8
Cuba	8
Cyprus	6
Czech Republic	8
Denmark	3
Djibouti	8
Dominica	7
Dominican Republic	7
Ecuador	5
Egypt	6
El Salvador	5
Equatorial Guinea	8
Eritrea	8
Estonia	8
Ethiopia	8
Falkland Islands	5
Faroe Islands	8
Fiji	8
Finland	3
France	3
French Guiana	5
French Polynesia	8
Gabon	8
Gambia	8
Georgia, Republic of	8
Germany	3
Ghana	8
Gibraltar	3
Great Britain & Northern Ireland	3
Greece	3
Greenland	8
Grenada	7
Guadeloupe	7
Guatemala	5
Guinea	8
Guinea-Bissau	8
Guyana	5
Haiti	7
Honduras	5
Hong Kong	3
Hungary	8
Iceland	8
India	6
Indonesia	4
Iran	6
Iraq	(1)
Ireland (Eire)	3
Israel	6
Italy	3
Jamaica	7
Japan	(1)
Jordan	6
Kazakhstan	8
Kenya	8
Kiribati	8
Korea, Democratic People's Republic of (North)	(1)
Korea, Republic of (South)	4
Kuwait	6
Kyrgyzstan	8
Laos	8
Latvia	8
Lebanon	6
Lesotho	8
Liberia	8
Libya	(1)
Liechtenstein	3
Lithuania	8
Luxembourg	3
Macao	3
Macedonia, Republic of	8
Madagascar	8
Malawi	8
Malaysia	4
Maldives	8
Mali	8
Malta	3
Martinique	7
Mauritania	8
Mauritius	8

Country	Rate group
Mexico	2
Moldova	8
Mongolia	8
Montserrat	7
Morocco	8
Mozambique	8
Namibia	8
Nauru	8
Nepal	8
Netherlands	3
Netherlands Antilles	7
New Caledonia	8
New Zealand	4
Nicaragua	5
Niger	8
Nigeria	8
Norway	3
Oman	6
Pakistan	6
Panama	5
Papua New Guinea	8
Paraguay	5
Peru	5
Philippines	4
Pitcairn Island	(1)
Poland	8
Portugal	3
Qatar	6
Reunion	8
Romania	8
Russia	8
Rwanda	8
St. Christopher (St. Kitts) & Nevis	7
Saint Helena	(1)
Saint Lucia	7
Saint Pierre & Miquelon	1
Saint Vincent & Grenadines	7
San Marino	3
Sao Tome & Principe	8
Saudi Arabia	6
Senegal	8
Serbia-Montenegro (Yugoslavia)	8
Seychelles	8
Sierra Leone	8
Singapore	3
Slovak Republic (Slovakia)	8
Slovenia	8
Solomon Islands	8
Somalia	8
South Africa	8
Spain	3
Sri Lanka	8
Sudan	(1)
Suriname	5
Swaziland	8
Sweden	3
Switzerland	3
Syrian Arab Republic (Syria)	6
Taiwan	3
Tajikistan	8
Tanzania	8
Thailand	4
Togo	8
Tonga	8
Trinidad & Tobago	7
Tristan da Cunha	(1)
Tunisia	8
Turkey	6
Turkmenistan	8
Turks & Caicos Islands	7
Tuvalu	8
Uganda	8
Ukraine	8
United Arab Emirates	6
Uruguay	5
Uzbekistan	8
Vanuatu	8
Vatican City	3
Venezuela	5
Vietnam	4
Wallis & Futuna Islands	4
Western Samoa	4
Yemen	6
Zambia	8
Zimbabwe	8

[1] No Service.

Although the Postal Service is exempted by 39 U.S.C. 410(a) from the advance notice requirements of the Administrative Procedure Act regarding proposed rulemaking (5 U.S.C. 553), the Postal Service invites public comment on the amendment to the interim rule at the above address.

The Postal Service is amending International Mail Manual chapter 2, Conditions for Mailing, which is incorporated by reference in the Code of Federal Regulations. See 39 CFR 20.1.

A transmittal letter changing the relevant pages in the International Mail Manual will be published and automatically transmitted to all subscribers. Notice of issuance of the transmittal will be published in the **Federal Register** as provided by 39 CFR 20.3.

List of Subjects in 39 CFR Part 20

Foreign relations, International postal service.

PART 20—[AMENDED]

1. The authority citation for 39 CFR Part 20 continues to read as follows:

Authority: 5 U.S.C. 552(a); 39 U.S.C. 401, 404, 407, 408.

2. Chapter 2 of the International Mail Manual (IMM) is amended as follows:

2 CONDITIONS FOR MAILING

210 Express Mail International Service

* * * * *

215 Priority Mail Global Guaranteed

* * * * *

215.3 Service Areas

215.31 U.S. Origins

Priority Mail Global Guaranteed (PMGG) items must be entered at post offices that are located in the following ZIP Code areas:

State	ZIP code areas
Arizona	850, 852–853
California	900, 902–908, 910–918, 926–928, 937, 939–941, 943–944, 946, 949–951, 954
Colorado	802
Connecticut	060–069
Delaware	197–199
District of Columbia	200, 202–203, 205
Florida	320, 322, 327–338, 342, 346–347
Georgia	300–303, 305–306, 311
Illinois	600–608, 610–611, 620, 622, 629
Indiana	460–470, 472–475, 478–479
Kentucky	410, 452
Maine	039–041
Maryland	206–212, 214, 217, 219
Massachusetts	010–027
Michigan	481–482, 486–491, 493–497
Minnesota	550–551, 553–554, 558–559
Missouri	630–631, 633
New Hampshire	030–034, 038
New Jersey	070–085, 087–089
New York	100–101, 103–105, 107, 109–119, 124–127
North Carolina	270–278, 280–282, 286
Ohio	430–438, 440–458

State	ZIP code areas
Pennsylvania	189–191, 193–196
Rhode Island	028–029
Tennessee	372
Texas	750–752, 760–764, 769–770, 772–778, 780–782, 784, 791, 794
Virginia	201, 220–225, 230–232, 238–239
Vermont	054, 056
Washington	980–982
Wisconsin	530–532, 534

215.32 Foreign Destinations

Priority Mail Global Guaranteed (PMGG) service is available to all locations that are referenced in the Individual Country Listings except for the following:

Afghanistan
Ascension
China
Iraq
Japan
Korea, Democratic People's Republic of (North)
Libya
Pitcairn Island
Saint Helena
Sudan
Tristan de Cunha

* * * * *

215.6 Postage

215.61 RATE GROUPS [1]

Weight not over (lb.) [2]	Rate groups 1 and 2 (Canada, Mexico, and St. Pierre & Miquelon)	Rate groups 3 and 7	Rate groups 4 and 6	Rate group 5	Rate group 8
0.5	$20.00	$24.00	$29.00	$40.00	$60.00
1	31.00	34.00	41.00	51.00	72.00
2	31.00	34.00	41.00	65.00	87.00
3	42.00	53.00	60.00	80.00	102.00
4	44.00	60.00	67.00	94.00	115.00
5	47.00	66.00	74.00	107.00	129.00
6	50.00	71.00	81.00	119.00	141.00
7	53.00	76.00	88.00	131.00	153.00
8	56.00	81.00	95.00	142.00	165.00
9	59.00	85.00	102.00	154.00	176.00
10	62.00	89.00	109.00	166.00	188.00
11	64.00	93.00	114.00	177.00	200.00
12	66.00	98.00	120.00	187.00	212.00
13	69.00	102.00	125.00	197.00	224.00
14	72.00	106.00	131.00	207.00	235.00
15	74.00	110.00	136.00	215.00	246.00
16	77.00	114.00	141.00	223.00	258.00
17	79.00	118.00	147.00	230.00	269.00
18	82.00	121.00	152.00	238.00	280.00
19	84.00	125.00	158.00	245.00	292.00
20	87.00	128.00	163.00	253.00	303.00
21	89.00	132.00	168.00	260.00	313.00
22	91.00	136.00	173.00	268.00	322.00
23	94.00	139.00	178.00	275.00	332.00
24	96.00	143.00	183.00	283.00	341.00
25	98.00	146.00	188.00	290.00	349.00
26	100.00	149.00	193.00	298.00	358.00
27	103.00	153.00	198.00	305.00	366.00
28	105.00	156.00	203.00	313.00	375.00
29	107.00	160.00	208.00	320.00	384.00
30	110.00	163.00	213.00	328.00	392.00
31	112.00	167.00	218.00	335.00	401.00
32	114.00	170.00	223.00	343.00	410.00
33	116.00	174.00	228.00	350.00	418.00
34	119.00	177.00	233.00	358.00	427.00
35	121.00	181.00	238.00	365.00	435.00
36	123.00	184.00	243.00	373.00	444.00
37	125.00	188.00	248.00	380.00	453.00
38	128.00	191.00	253.00	388.00	461.00
39	130.00	195.00	258.00	395.00	470.00
40	132.00	198.00	263.00	403.00	479.00
41	133.00	202.00	268.00	410.00	487.00
42	135.00	205.00	273.00	418.00	496.00
43	137.00	209.00	278.00	425.00	505.00
44	138.00	212.00	283.00	433.00	514.00
45	140.00	216.00	288.00	440.00	522.00

215.61 RATE GROUPS [1]—Continued

Weight not over (lb.) [2]	Rate groups 1 and 2 (Canada, Mexico, and St. Pierre & Miquelon)	Rate groups 3 and 7	Rate groups 4 and 6	Rate group 5	Rate group 8
46	142.00	219.00	293.00	448.00	531.00
47	143.00	223.00	298.00	455.00	540.00
48	145.00	226.00	303.00	463.00	548.00
49	147.00	230.00	308.00	470.00	557.00
50	148.00	233.00	313.00	478.00	566.00
51	148.00	233.00	313.00	478.00	566.00
52	152.00	240.00	323.00	492.00	583.00
53	152.00	240.00	323.00	492.00	583.00
54	154.00	247.00	333.00	505.00	601.00
55	154.00	247.00	333.00	505.00	601.00
56	156.00	254.00	343.00	516.00	617.00
57	156.00	254.00	343.00	516.00	617.00
58	159.00	261.00	353.00	527.00	633.00
59	159.00	261.00	353.00	527.00	633.00
60	161.00	268.00	363.00	538.00	649.00
61	161.00	268.00	363.00	538.00	649.00
62	164.00	275.00	373.00	549.00	666.00
63	164.00	275.00	373.00	549.00	666.00
64	166.00	282.00	383.00	560.00	684.00
65	166.00	282.00	383.00	560.00	684.00
66	168.00	289.00	393.00	571.00	701.00
67	168.00	289.00	393.00	571.00	701.00
68	171.00	296.00	403.00	583.00	718.00
69	171.00	296.00	403.00	583.00	718.00
70	173.00	303.00	413.00	594.00	735.00

[1] See the Individual Country Listings for the postage rates that are applicable to each PMGG destination country.
[2] Maximum weight limit is 70 pounds to all destination countries.

* * * * *

[The Individual Country Listing pages in the International Mail Manual will be revised to reflect the availability of Priority Mail Global Guaranteed service and the applicable postage rates.]

Stanley F. Mires,

Chief Counsel, Legislative.

[FR Doc. 00–12971 Filed 5–25–00; 8:45 am]

BILLING CODE 7710–12–P

ENVIRONMENTAL PROTECTION AGENCY

40 CFR Part 52

[CA–184–0229; FRL–6585–9]

Approval and Promulgation of Implementation Plans; California State Implementation Plan Revision, Bay Area Air Quality Management District, South Coast Air Quality Management District, San Diego County Air Pollution Control District, and Monterey Bay Unified Air Pollution Control District

AGENCY: Environmental Protection Agency (EPA).

ACTION: Final rule.

SUMMARY: EPA is finalizing the approval of revisions to the California State Implementation Plan (SIP) proposed in the **Federal Register** on January 19, 2000. These revisions concern Bay Area Air Quality Management District (BAAQMD) Rule 8.45, Motor Vehicle and Mobile Equipment Coating Operations; South Coast Air Quality Management District (SCAQMD) Rule 1151, Motor Vehicle and Mobile Equipment Non-Assembly Line Coating Operation; San Diego County Air Pollution Control District (SDCAPCD) Rule 67.19, Coatings and Printing Inks Manufacturing Operations, and Monterey Bay Unified Air Pollution Control District (MBUAPCD) Rule 425, Use of Cutback Asphalt. This approval action will incorporate these rules into the federally approved SIP. The intended effect of finalizing this action is to regulate emissions of volatile organic compounds (VOCs) according to the requirements of the Clean Air Act, as amended in 1990 (CAA or the Act). These revised rules control VOC emissions from automobile refinishing, coating and ink manufacturing and use of cutback asphalt. Thus, EPA is finalizing the approval of these revisions into the California SIP under provisions of the CAA regarding EPA action on SIP submittals, SIPs for national primary and secondary ambient air quality standards and plan requirements for nonattainment areas.

EFFECTIVE DATE: This action is effective June 26, 2000.

ADDRESSES: Copies of the rule revisions and EPA's evaluation reports for these rules are available for public inspection at EPA's Region IX office during normal business hours. Copies of the submitted rule revisions are available for inspection at the following locations:

Rulemaking Office (AIR–4), Air Division, U.S. Environmental Protection Agency, Region IX, 75 Hawthorne Street, San Francisco, CA 94105

California Air Resources Board, Stationary Source Division, Rule Evaluation Section, 2020 ''L'' Street, Sacramento, CA 95812

Bay Area Air Quality Management District, 939 Ellis Street, San Francisco, CA 94109

South Coast Air Quality Management District, 21865 E. Copley, Diamond Bar, CA 91765

Monterey Bay Unified Air Pollution Control District, 24580 Silver Cloud Court, Monterey, CA 93940

San Diego County Air Pollution Control District, 9150 Chesapeake Drive, San Diego, CA 92123

FOR FURTHER INFORMATION CONTACT: Cynthia G. Allen, Rulemaking Office

(AIR–4), Air Division, U.S. Environmental Protection Agency, Region IX, 75 Hawthorne Street, San Francisco, CA 94105–3901, (415) 744–1189.

SUPPLEMENTARY INFORMATION:

I. Applicability

EPA is approving Bay Area Air Quality Management District (BAAQMD) Rule 8.45, Motor Vehicle and Mobile Equipment Coating Operations; South Coast Air Quality Management District (SCAQMD) Rule 1151, Motor Vehicle and Mobile Equipment Non-Assembly Line Coating Operations; San Diego County Air Pollution Control District (SDCAPCD) Rule 67.19, Coatings and Printing Inks Manufacturing Operations, and Monterey Bay Unified Air Pollution Control District (MBUAPCD) Rule 425, Use of Cutback Asphalt. These rules were submitted by the California Air Resources Board (CARB) to EPA on August 1, 1997, February 16, 1999, October 18, 1996, and June 3, 1997, respectively.

II. Background

On January 19, 2000 (see 65 FR 2921) EPA proposed to approve the following rules: BAAQMD Rule 8.45, Motor Vehicle and Mobile Equipment Coating Operations; SCAQMD Rule 1151, Motor Vehicle and Mobile Equipment Non-Assembly Line Coating Operations; SDCAPCD Rule 67.19, Coatings and Printing Inks Manufacturing Operations, and MBUAPCD Rule 425, Use of Cutback Asphalt. BAAQMD adopted Rule 8.45 on November 6, 1996; SCAQMD adopted Rule 1151 on December 11, 1998; SDCAPCD adopted Rule 67.19 on May 15, 1996; and MBUAPCD adopted Rule 425 on March 26, 1997. These rules were submitted in response to EPA's 1988 SIP Call and the CAA section 182(a)(2)(A) requirement that nonattainment areas fix their reasonable available control technology (RACT) rules for ozone in accordance with EPA guidance that interpreted the requirements of the pre-amendment Act. A detailed discussion of the background for each of the above rules and nonattainment areas is provided in the proposed rule (PR) cited above.

EPA has evaluated all of the above rules for consistency with the requirements of the CAA and EPA regulations and EPA's interpretation of these requirements as expressed in the various EPA policy guidance documents referenced in the PR. EPA is finalizing the proposed approval of these rules in order to strengthen the SIP. A discussion of the submitted rules are as follows:

BAAQMD Rule 8.45, Motor Vehicle and Mobile Equipment Coating Operations includes the following significant changes from the current SIP:

- Section 231, Volatile Organic Compounds, was amended by adding acetone, parachlorobenzotrifluoride (PCBTF), and cyclic, branched, or linear, fully methylated siloxanes (VMS) to the list of exempt compounds in conformance with EPA and CARB action.
- Section 601, ''Analysis of Samples'' was amended by adding BAAQMD Method 41 to analyze samples containing PCBTF, and BAAQMD Method 43 to analyze samples containing VMS.
- Section 602, ''Determination of Emissions'' was amended by adding the following sentence: For the purpose of determining abatement device efficiency, any acetone, PCBTF or VMS shall be included as a VOC.

SCAQMD Rule 1151, Motor Vehicles and Mobile Equipment Non-Assembly Line Coating Operations, includes the following significant changes from the current SIP:

- Effective December 12, 1998 and until April 1, 1998 the Group II multistage topcoat composite VOC limit was raised to 4.5 lbs/gal. The pre-December 12, 1998 limit of 3.5 lbs/gal limit was reinstated on April 1, 1999;
- A 10% usage limitation on a monthly basis was added for specialty coatings;
- Expanded the prohibition of sale clause;
- Added the requirement that manufacturers must offer for sale by January 1, 1999 clearcoats having VOC content of 2.1 lbs/gal or less; and
- Added an exemption for topcoats applied to prototype motor vehicles.

There is currently no version of SDCAPCD's Rule 67.19, Coatings and Printing Inks Manufacturing Operations, in the SIP. The submitted rule includes the following provisions:

- Applicability section;
- Exemption for sources emitting less than 15 lbs/day;
- Sources emitting less than 50 tons/year are exempted from the requirements of emission control systems;
- Storage tanks of less than 550 gal capacity, or those used exclusively for epoxies or water based coatings are exempted from the requirements of submerged fill pipes;
- A definition section;
- Equipment and workmanship standards;
- Option to comply by using abatement equipment;
- Recordkeeping provisions; and
- Test methods.

Earlier versions of this rule were adopted on June 7, 1994, and March 7, 1995. While EPA can only act on the most recently submitted version, EPA reviewed relevant materials associated with the superseded versions.

MBUAPCD submitted Rule 425, Use of Cutback Asphalt, includes the following significant changes from the current SIP:

- Use of the term ''petroleum solvent'' is now used consistently throughout the rule. Prior to this revision, the term organic solvents and petroleum solvents were used interchangeably leading to confusion in the implementation and enforcement of the rule. The rule has been revised to enhance clarity.
- An additional change was made to the ''effective date'' section. The rule as revised is now effective on the date of adoption.

A detailed discussion of the rules provisions and evaluation has been provided in the PRs and in technical support documents (TSDs) available at EPA's Region IX office. TSDs prepared by EPA are dated November 2, 1998 for MBUAPCD Rule 425, December 1999 for SDCAPCD Rule 67.19, SCAQMD Rule 1151, and BAAQMD Regulation 8–45.

III. Response to Public Comments

A 30-day public comment period was provided in the PR (see 65 FR 2921). EPA received no comments during this period and one comment after the 30 days expired. This comment was submitted by the National Paint & Coatings Association (NPCA), dated February 25, 2000, and only concerned SCAQMD Rule 1151. Although this comment was submitted and received after close of the comment period, we are acknowledging the comment in this action and summarizing NPCA's primary concern.

NPCA is concerned with the prohibition of sale provision contained in Rule 1151, paragraph (d)(2). NPCA specifically objects to EPA's characterization in proposing approval of Rule 1151, that SCAQMD has ''expanded the prohibition of sale clause.'' EPA believes this characterization is correct, however, and directs the commenter to page 9 of the December 1998 final staff report associated with SCAQMD's adoption of the submitted rule.

Nothing in this comment has caused EPA to change the rationale for proposing approval of SCAQMD 1151 or the other rules.

IV. EPA Action

EPA is finalizing action to approve BAAQMD Rule 8.45, Motor Vehicle and Mobile Equipment Coating Operations; SCAQMD Rule 1151, Motor Vehicle and Mobile Equipment Non-Assembly Line Coating Operations; SDCAPCD Rule 67.19, Coatings and Printing Inks Manufacturing Operations, and MBUAPCD Rule 425, Use of Cutback Asphalt for inclusion into the California SIP. EPA is approving these rules under section 110(k)(3) as meeting the requirements of section 110(a) and Part D of the CAA. This approval action will incorporate these rules into the federally approved SIP. The intended effect of approving these rules are to regulate emissions of VOCs according to requirements of the CAA.

V. Administrative Requirements

A. Executive Order 12866

The Office of Management and Budget (OMB) has exempted this regulatory action from Executive Order 12866, entitled ''Regulatory Planning and Review.''

B. Executive Order 13045

Executive Order 13045, entitled Protection of Children from Environmental Health Risks and Safety Risks (62 FR 19885, April 23, 1997), applies to any rule that: (1) Is determined to be ''economically significant'' as defined under Executive Order 12866, and (2) concerns an environmental health or safety risk that EPA has reason to believe may have a disproportionate effect on children. If the regulatory action meets both criteria, the Agency must evaluate the environmental health or safety effects of the planned rule on children, and explain why the planned regulation is preferable to other potentially effective and reasonably feasible alternatives considered by the Agency.

This rule is not subject to Executive Order 13045 because it does not involve decisions intended to mitigate environmental health or safety risks.

C. Executive Order 13084

Under Executive Order 13084, Consultation and Coordination with Indian Tribal Governments, EPA may not issue a regulation that is not required by statute, that significantly affects or uniquely affects the communities of Indian tribal governments, and that imposes substantial direct compliance costs on those communities, unless the Federal government provides the funds necessary to pay the direct compliance costs incurred by the tribal governments. If the mandate is unfunded, EPA must provide to the Office of Management and Budget, in a separately identified section of the preamble to the rule, a description of the extent of EPA's prior consultation with representatives of affected tribal governments, a summary of the nature of their concerns, and a statement supporting the need to issue the regulation.

In addition, Executive Order 13084 requires EPA to develop an effective process permitting elected and other representatives of Indian tribal governments ''to provide meaningful and timely input in the development of regulatory policies on matters that significantly or uniquely affect their communities.'' Today's rule does not significantly or uniquely affect the communities of Indian tribal governments. Accordingly, the requirements of section 3(b) of Executive Order 13084 do not apply to this rule.

D. Executive Order 13132

Executive Order 13121, entitled Federalism (64 FR 43255, August 10, 1999) revokes and replaces Executive Orders 12612, Federalism and 12875, Enhancing the Intergovernmental Partnership. Executive Order 13132 requires EPA to develop an accountable process to ensure ''meaningful and timely input by State and local officials in the development of regulatory policies that have federalism implications.'' ''Policies that have federalism implications'' is defined in the Executive Order to include regulations that have ''substantial direct effects on the States, on the relationship between the national government and the States, or on the distribution of power and responsibilities among the various levels of government.'' Under Executive Order 13132, EPA may not issue a regulation that has federalism implications, that imposes substantial direct compliance costs, and that is not required by statute, unless the Federal government provides the funds necessary to pay the direct compliance costs incurred by State and local governments, or EPA consults with State and local officials early in the process of developing the proposed regulation. EPA also may not issue a regulation that has federalism implications and that preempts State law unless the Agency consults with State and local officials early in the process of developing the proposed regulation.

This rule will not have substantial direct effects on the States, on the relationship between the national government and the States, or on the distribution of power and responsibilities among the various levels of government, as specified in Executive Order 13132 (64 FR 43255, August 10, 1999), because it merely approves a state rule implementing a federal standard, and does not alter the relationship or the distribution of power and responsibilities established in the Clean Air Act. Thus, the requirements of section 6 of the Executive Order do not apply to this rule.

E. Regulatory Flexibility Act

The Regulatory Flexibility Act (RFA) generally requires an agency to conduct a regulatory flexibility analysis of any rule subject to notice and comment rulemaking requirements unless the agency certifies that the rule will not have a significant economic impact on a substantial number of small entities. Small entities include small businesses, small not-for-profit enterprises, and small governmental jurisdictions.

This final rule will not have a significant impact on a substantial number of small entities because SIP approvals under section 110 and subchapter I, part D of the Clean Air Act do not create any new requirements but simply approve requirements that the State is already imposing. Therefore, because the Federal SIP approval does not create any new requirements, I certify that this action will not have a significant economic impact on a substantial number of small entities.

Moreover, due to the nature of the Federal-State relationship under the Clean Air Act, preparation of flexibility analysis would constitute Federal inquiry into the economic reasonableness of state action. The Clean Air Act forbids EPA to base its actions concerning SIPs on such grounds. *Union Electric Co.,* v. *U.S. EPA,* 427 U.S. 246, 255–66 (1976); 42 U.S.C. 7410(a)(2).

F. Unfunded Mandates

Under section 202 of the Unfunded Mandates Reform Act of 1995 (''Unfunded Mandates Act''), signed into law on March 22, 1995, EPA must prepare a budgetary impact statement to accompany any proposed or final rule that includes a Federal mandate that may result in estimated annual costs to State, local, or tribal governments in the aggregate; or to private sector, of $100 million or more. Under section 205, EPA must select the most cost-effective and least burdensome alternative that achieves the objectives of the rule and is consistent with statutory requirements. Section 203 requires EPA to establish a plan for informing and

advising any small governments that may be significantly or uniquely impacted by the rule.

EPA has determined that the approval action promulgated does not include a Federal mandate that may result in estimated annual costs of $100 million or more to either State, local, or tribal governments in the aggregate, or to the private sector. This Federal action approves pre-existing requirements under State or local law, and imposes no new requirements. Accordingly, no additional costs to State, local, or tribal governments, or to the private sector, result from this action.

G. Submission to Congress and the Comptroller General

The Congressional Review Act, 5 U.S.C. 801 *et seq.*, as added by the Small Business Regulatory Enforcement Fairness Act of 1996, generally provides that before a rule may take effect, the agency promulgating the rule must submit a rule report, which includes a copy of the rule, to each House of the Congress and to the Comptroller General of the United States. EPA will submit a report containing this rule and other required information to the U.S. Senate, the U.S. House of Representatives, and the Comptroller General of the United States prior to publication of the rule in the **Federal Register**. A major rule cannot take effect until 60 days after it is published in the **Federal Register**. This rule is not a ''major'' rule as defined by 5 U.S.C. 804(2).

H. National Technology Transfer and Advancement Act

Section 12 of the National Technology Transfer and Advancement Act (NTTAA) of 1995 requires Federal agencies to evaluate existing technical standards when developing a new regulation. To comply with NTTAA, EPA must consider and use ''voluntary consensus standards'' (VCS) if available and applicable when developing programs and policies unless doing so would be inconsistent with applicable law or otherwise impractical.

The EPA believes that VCS are inapplicable to this action. Today's action does not require the public to perform activities conducive to the use of VCS.

I. Petitions for Judicial Review

Under section 307(b)(1) of the Clean Air Act, petitions for judicial review of this action must be filed in the United States Court of Appeals for the appropriate circuit by July 25, 2000. Filing a petition for reconsideration by the Administrator of this final rule does not affect the finality of this rule for the purposes of judicial review nor does it extend the time within which a petition for judicial review may be filed, and shall not postpone the effectiveness of such rule or action. This action may not be challenged later in proceedings to enforce its requirements. (See section 307(b)(2).)

Lists of Subjects in 40 CFR Part 52

Environmental protection, Air pollution control, Hydrocarbons, Incorporation by reference, Intergovernmental relations, Ozone, Reporting and recordkeeping requirements, Volatile organic compounds.

Dated: April 12, 2000.

John Wise,

Acting Regional Administrator, Region IX.

Part 52, Chapter I, Title 40 of the Code of Federal Regulations is amended as follows:

PART 52—[AMENDED]

1. The authority citation for Part 52 continues to read as follows:

Authority: 42 U.S.C. 7401 *et seq.*

Subpart F—California

2. Section 52.220 is amended by adding paragraphs (c)(241)(i)(A)(*5*), (c)(248)(i)(F), (c)(258)(i)(A)(*3*) and (c)(262)(i)(C)(*2*) to read as follows:

§ 52.220 Identification of plan.

* * * * *

(c) * * *

(241) * * *

(i) * * *

(A) * * *

(*5*) Rule 67.19, adopted May 15, 1996.

* * * * *

(248) * * *

(i) * * *

(F) * * *

(*1*) Regulation 8, Rule 45, adopted on November 6, 1996.

* * * * *

(258) * * *

(i) * * *

(A) * * *

(*3*) Rule 425, adopted on March 26, 1997.

* * * * *

(262) * * *

(i) * * *

(C) * * *

(*2*) Rule 1151, adopted on December 11, 1998.

* * * * *

[FR Doc. 00–13200 Filed 5–25–00; 8:45 am]

BILLING CODE 6560–50–P

ENVIRONMENTAL PROTECTION AGENCY

40 CFR Part 62

[PA152–4099a; FRL–6705–7]

Approval and Promulgation of State Air Quality Plans for Designated Facilities and Pollutants; Allegheny County, Pennsylvania; Control of Emissions from Existing Hospital/ Medical/Infectious Waste Incinerators; Correction

AGENCY: Environmental Protection Agency (EPA).

ACTION: Direct final rule; correcting amendment.

SUMMARY: This document corrects minor errors in the text of rule language in a published final rule pertaining to EPA's approval of the Allegheny County, Pennsylvania hospital/medical/ /infectious waste incinerator (HMIWI) 111(d)/129 plan submitted by the Commonwealth of Pennsylvania.

EFFECTIVE DATE: June 6, 2000.

FOR FURTHER INFORMATION CONTACT: James B. Topsale, (215) 814–2190 or by e-mail at topsale.jim@epa.gov.

SUPPLEMENTARY INFORMATION: Throughout this document wherever ''we,'' or ''our'' are used, we mean EPA. On April 7, 2000 (65 FR 18249), we published a final rulemaking action announcing our approval of the Allegheny County, Pennsylvania hospital/medical/infectious waste incinerator (HMIWI) 111(d)/129 plan submitted by the Commonwealth of Pennsylvania. In the text of that document, we inadvertently made two minors. Neither the rationale for nor the intent of the April 7, 2000 direct final rule was affected by these minor errors. This action simply corrects the erroneous language in the published final rulemaking.

To the final rule (FR Docket 00–8660) published in the **Federal Register** on April 7, 2000 (65 FR 18249), we are making the following corrections:

(1) On page 18251 in the first column, the revised rule language to the second answer (A.) is corrected to read, ''* * * meeting the maximum achievable control technology * * *''.

The word ''available'' was inadvertently inserted in place of ''achievable''.

(2) On page 18252 in the third column under § 62.9662 Effective Date, the text is revised to read, ''The effective date of the plan is June 6, 2000.''

The phrase ''* * * for municipal solid waste landfills * * *'' was inadvertently included in the sentence and is hereby deleted.

Section 553 of the Administrative Procedure Act, 5 U.S.C. 553(b)(B), provides that, when an agency for good cause finds that notice and public procedures are impracticable, unnecessary or contrary to the public interest, the agency may issue a rule without providing notice and an opportunity for public comment. We have determined that there is good cause for making today's rule final without prior proposal and opportunity for comment because we are merely correcting minor errors in the text of a previous action. Thus, notice and public procedures are unnecessary. We find that this constitutes good cause under 5 U.S.C. 553(b)(B).

Administrative Requirements

Under Executive Order 12866 (58 FR 51735, October 4, 1993), this action is not a ''significant regulatory action'' and is therefore not subject to review by the Office of Management and Budget. Because the agency has made a ''good cause'' finding that this action is not subject to notice-and-comment requirements under the Administrative Procedures Act or any other statute as indicated in the Supplementary Information section above, it is not subject to the regulatory flexibility provisions of the Regulatory Flexibility Act (5 U.S.C 601 *et seq.*), or to sections 202 and 205 of the Unfunded Mandates Reform Act of 1995 (UMRA) (Public Law 104–4). In addition, this action does not significantly or uniquely affect small governments or impose a significant intergovernmental mandate, as described in sections 203 and 204 of UMRA. This rule also does not significantly or uniquely affect the communities of tribal governments, as specified by Executive Order 13084 (63 FR 27655, May 10, 1998). This rule will not have substantial direct effects on the States, on the relationship between the national government and the States, or on the distribution of power and responsibilities among the various levels of governments, as specified by Executive Order 13132 (64 FR 43255, August 10, 1999). This rule also is not subject to Executive Order 13045 (62 FR 19885, April 23, 1997), because it is not economically significant.

This technical correction action does not involve technical standards; thus the requirements of section 12(d) of the National Technology Transfer and Advancement Act of 1995 (15 U.S.C. 272 note) do not apply. The rule also does not involve special consideration of environmental justice related issues as required by Executive Order 12898 (59 FR 7629, February 16, 1994). In issuing this rule, EPA has taken the necessary steps to eliminate drafting errors and ambiguity, minimize potential litigation, and provide a clear legal standard for affected conduct, as required by section 3 of Executive Order 12988 (61 FR 4729, February 7, 1996). EPA has complied with Executive Order 12630 (53 FR 8859, March 15, 1998) by examining the takings implications of the rule in accordance with the ''Attorney General's Supplemental Guidelines for the Evaluation of Risk and Avoidance of Unanticipated Takings'' issued under the executive order. This rule does not impose an information collection burden under the Paperwork Reduction Act of 1995 (44 U.S.C. 3501 *et seq.*).

The Congressional Review Act (5 U.S.C. 801 *et seq.*), as added by the Small Business Regulatory Enforcement Fairness Act of 1996, generally provides that before a rule may take effect, the agency promulgating the rule must submit a rule report, which includes a copy of the rule, to each House of the Congress and to the Comptroller General of the United States. Section 808 allows the issuing agency to make a rule effective sooner than otherwise provided by the CRA if the agency makes a good cause finding that notice and public procedure is impracticable, unnecessary or contrary to the public interest. This determination must be supported by a brief statement. 5 U.S.C. 808(2). As stated previously, EPA had made such a good cause finding, including the reasons therefore, and established an effective date of June 6, 2000. EPA will submit a report containing this rule and other required information to the U.S. Senate, the U.S. House of Representatives, and the Comptroller General of the United States prior to publication of the rule in the **Federal Register**. These corrections to the preamble and 40 CFR 62.9662 for Pennsylvania is not a ''major rule'' as defined by 5 U.S.C. 804(2).

Dated: May 10, 2000.

Bradley M. Campbell,

Regional Administrator, Region III.

[FR Doc. 00–13205 Filed 5–25–00; 8:45 am]

BILLING CODE 6560–50–P

DEPARTMENT OF TRANSPORTATION

Office of the Secretary

49 CFR Part 1

[OST Docket No.1999–6189; Amendment 1–302]

Organization and Delegation of Powers and Duties Delegations to the Maritime Administrator

AGENCY: Office of the Secretary, DOT.

ACTION: Final rule.

SUMMARY: The Secretary of Transportation (Secretary) is delegating to the Maritime Administrator his authority to appoint special police and enforce laws for the protection of property and persons at the United States Merchant Marine Academy located in Kings Point, New York. The authorities relating to the protection of Federal property are vested in the Secretary of Transportation by a March 2000 delegation from the Administrator of General Services. The Act of June 1, 1948, P.L. 80–566, 62 Stat. 281, 40 U.S.C. 318–318c and the Federal Property and Administrative Services Act of 1949, as amended, 63 Stat. 377, provides the Administrator of General Services the authority relating to the protection of Federal property.

EFFECTIVE DATE: May 26, 2000.

FOR FURTHER INFORMATION CONTACT: Richard Weaver, Chief, Division of Management and Organization, Maritime Administration, MAR–318, Room 7301, 400 Seventh Street, SW., Washington, DC 20590, Phone: (202) 366–2811; or Blane Workie, Office of General Counsel (C–50), Department of Transportation, Room 10424, 400 Seventh Street, SW., Washington, DC 20590, Phone: (202) 366–9314.

SUPPLEMENTARY INFORMATION: The Secretary of Transportation is delegating to the Maritime Administrator his authority relating to the protection of property and persons at the United States Merchant Marine Academy located in Kings Point, New York. The Secretary of Transportation obtained the authority to enforce laws for the protection of property and persons at the United States Merchant Marine Academy from the Administrator of General Services on March 23, 2000.

Previously, the Administrator of General Services had delegated this authority to the Secretary of Transportation who redelegated the authority to the Maritime Administrator. The delegation expired on May 1, 2000. As a result, this delegation of authority from the Secretary of Transportation to

the Maritime Administrator relating to the protection of property and persons at the United States Merchant Marine Academy is necessary to ensure the continued authority of the Maritime Administrator to appoint uniformed personnel as special police, establish the rules and regulations governing conduct on the affected property, and execute agreements with other Federal, State, or local authorities. The Maritime Administration has previously had the responsibility for the Academy and related property, and currently has the experience and requisite expertise to promptly effect the actions prescribed by the statutes.

This amendment revises 49 CFR 1.66(q) to reflect the Secretary of Transportation's delegation of his authority relating to the protection of the Merchant Academy to the Maritime Administrator for an indefinite period of time. Since this amendment relates to departmental organization, procedure and practice, notice and comment are unnecessary under 5 U.S.C. 553(b). Further, since the amendment expedites the Maritime Administration's ability to meet the statutory intent of the applicable laws and regulations covered by this delegation, the Secretary finds good cause under 5 U.S.C. 553(d)(3) for the final rule to be effective on the date of publication in the **Federal Register**.

List of Subjects in 49 CFR Part 1

Authority delegations (Government agencies), Organization and functions (Government agencies).

In consideration of the foregoing, Part 1 of Title 49, Code of Federal Regulations, is amended, effective upon publication, to read as follows:

PART 1—[AMENDED]

1. The authority citation for part 1 continues to read as follows:

Authority: 49 U.S.C. 322; Public Law 101–552, 28 U.S.C. 2672; 31 U.S.C. 3711(a)(2).

2. Section 1.66 is amended by revising paragraph (q) is amended to read as follows:

§ 1.66 Delegations to Maritime Administrator.

* * * * *

(q) Exercise the authority vested in the Administrator of General Services by the Act of June 1, 1948, Public Law 80–566, 62 Stat. 281, 40 U.S.C. 318–318c and the Federal Property and Administrative Services Act of 1949, as amended, 63 Stat. 377, and delegated to the Secretary of Transportation by the Administrator of General Services on March 23, 2000, relating to the enforcement of laws for the protection of property and persons at the United States Merchant Marine Academy, located in Kings Point, New York. This may be accomplished through appointment of uniformed personnel as special police, establishment of rules and regulations governing conduct on the affected property, and execution of agreements with other Federal, State, or local authorities.

* * * * *

Issued at Washington, DC, this 18th day of May, 2000.

Rodney E. Slater,

Secretary of Transportation.

[FR Doc. 00–13270 Filed 5–25–00; 8:45 am]

BILLING CODE 4910–62–P

DEPARTMENT OF TRANSPORTATION

National Highway Traffic Safety Administration

49 CFR Part 541

[Docket No. NHTSA–2000–7331]

RIN 2127–AH78

Federal Motor Vehicle Theft Prevention Standard; Final Listing of Model Year 2001 High-Theft Vehicle Lines

AGENCY: National Highway Traffic Safety Administration (NHTSA), Department of Transportation.

ACTION: Final rule.

SUMMARY: This final rule announces NHTSA's determination for model year (MY) 2001 high-theft vehicle lines that are subject to the parts-marking requirements of the Federal motor vehicle theft prevention standard, and high-theft MY 2001 lines that are exempted from the parts-marking requirements because the vehicles are equipped with antitheft devices determined to meet certain statutory criteria pursuant to the statute relating to motor vehicle theft prevention.

EFFECTIVE DATE: The amendment made by this final rule is effective May 26, 2000.

FOR FURTHER INFORMATION CONTACT: Ms. Rosalind Proctor, Consumer Programs Division, Office of Planning and Consumer Programs, NHTSA, 400 Seventh Street, SW., Washington, DC 20590. Ms. Proctor's telephone number is (202) 366–0846. Her fax number is (202) 493–2290.

SUPPLEMENTARY INFORMATION: The Anti Car Theft Act of 1992, Pub. L. 102–519, amended the law relating to the parts-marking of major component parts on designated high-theft vehicle lines and other motor vehicles. The Anti Car Theft Act amended the definition of ''passenger motor vehicle'' in 49 U.S.C. 33101(10) to include a ''multipurpose passenger vehicle or light duty truck when that vehicle or truck is rated at not more than 6,000 pounds gross vehicle weight.'' Since ''passenger motor vehicle'' was previously defined to include passenger cars only, the effect of the Anti Car Theft Act is that certain multipurpose passenger vehicle (MPV) and light-duty truck (LDT) lines may be determined to be high-theft vehicles subject to the Federal motor vehicle theft prevention standard (49 CFR part 541).

The purpose of the theft prevention standard is to reduce the incidence of motor vehicle theft by facilitating the tracing and recovery of parts from stolen vehicles. The standard seeks to facilitate such tracing by requiring that vehicle identification numbers (VINs), VIN derivative numbers, or other symbols be placed on major component vehicle parts. The theft prevention standard requires motor vehicle manufacturers to inscribe or affix VINs onto covered original equipment major component parts, and to inscribe or affix a symbol identifying the manufacturer and a common symbol identifying the replacement component parts for those original equipment parts, on all vehicle lines selected as high-theft.

The Anti Car Theft Act also amended 49 U.S.C. 33103 to require NHTSA to promulgate a parts-marking standard applicable to major parts installed by manufacturers of ''passenger motor vehicles (other than light duty trucks) in not to exceed one-half of the lines not designated under 49 U.S.C. 33104 as high-theft lines.'' Section 33103(a) further directed NHTSA to select only lines not designated under section 33104 of this title as high theft lines. NHTSA lists each of these selected lines in appendix B to part 541. Since section 33103 did not specify marking of replacement parts for below-median lines, the agency does not require marking of replacement parts for these lines. NHTSA published a final rule amending 49 CFR part 541 to include the definitions of MPV and LDT, and major component parts. See 59 FR 64164, December 13, 1995.

49 U.S.C. 33104(a)(3) specifies that NHTSA shall select high-theft vehicle lines, with the agreement of the manufacturer, if possible. Section 33104(d) provides that once a line has been designated as likely high-theft, it remains subject to the theft prevention standard unless that line is exempted under section 33106. Section 33106 provides that a manufacturer may petition to have a high-theft line

exempted from the requirements of section 33104, if the line is equipped with an antitheft device as standard equipment. The exemption is granted if NHTSA determines that the antitheft device is likely to be as effective as compliance with the theft prevention standard in reducing and deterring motor vehicle thefts.

The agency annually publishes the names of the lines which were previously listed as high-theft, and the lines which are being listed for the first time and will be subject to the theft prevention standard beginning in a given model year. It also identifies those lines that are exempted from the theft prevention standard for a given model year under section 33104. Additionally, this listing identifies those lines (except light-duty trucks) in appendix B to part 541 that have theft rates below the 1990/1991 median theft rate but are subject to the requirements of this standard under section 33103.

On May 25, 1999, the final listing of high-theft lines for the MY 2000 vehicle lines was published in the **Federal Register** (64 FR 28110). The final listing identified five vehicle lines that were listed for the first time and became subject to the theft prevention standard beginning with the 2000 model year.

For MY 2001, the agency identified eight new vehicle lines that are likely to be high-theft lines, in accordance with the procedures published in 49 CFR part 542. The new lines are the Daewoo Musso (MPV), the Honda Acura MDX (MPV), the Kia Motors Rio and Optima, the Suzuki MPV (nameplate not available), the Toyota Highlander (MPV), the Toyota Lexus IS300 and the Toyota MR2 Spyder. In addition to these eight vehicle lines, the list of high-theft vehicle lines includes all lines previously designated as high-theft and listed for prior model years. Appendix A also has been amended to reflect a nameplate change for the Isuzu Amigo vehicle line to Isuzu Rodeo Sport beginning with MY 2001.

The list of lines that have been exempted by the agency from the parts-marking requirements of Part 541 includes high-theft lines newly exempted in full beginning with MY 2001. The four vehicle lines newly exempted in full are the Ford Mercury Sable, the General Motors Chevrolet Malibu, the Nissan Pathfinder and the Volkswagen Audi Allroad Quattro.

Subsequent to publishing the MY 2000 listing, the agency granted BMW of North America, Inc., an exemption from the parts-marking requirements of the theft prevention standard for its X5 vehicle line beginning with the 2000 model year. Therefore, the BMW X5 vehicle line has been added to Appendix A–I of this listing. Furthermore, Appendix A–I has been amended to reflect a nameplate change for the General Motors Chevrolet Lumina/Monte Carlo car line. The Chevrolet Lumina/Monte Carlo car line nameplate was changed to Chevrolet Impala/Monte Carlo beginning with MY 2000.

Appendix A–II has also been amended to reflect a MY 1994 nameplate change for the General Motors Cadillac Sixty Special to General Motors Cadillac Concours.

Additionally, since the agency granted Ford Motor Company an exemption from the parts-marking requirements for its Mercury Sable car line, it has been deleted from Appendix B.

The vehicle lines listed as being subject to the parts-marking standard have previously been designated as high-theft lines in accordance with the procedures set forth in 49 CFR part 542. Under these procedures, manufacturers evaluate new vehicle lines to conclude whether those new lines are likely to be high theft. The manufacturer submits these evaluations and conclusions to the agency, which makes an independent evaluation; and, on a preliminary basis, determines whether the new line should be subject to the parts-marking requirements. NHTSA informs the manufacturer in writing of its evaluations and determinations, together with the factual information considered by the agency in making them. The manufacturer may request the agency to reconsider the preliminary determinations. Within 60 days of the receipt of these requests, the agency makes its final determination. NHTSA informs the manufacturer by letter of these determinations and its response to the request for reconsideration. If there is no request for reconsideration, the agency's determination becomes final 45 days after sending the letter with the preliminary determination. Each of the new lines on the high-theft list has been the subject of a final determination under either 49 U.S.C. 33103 or 33104.

The vehicle lines listed as being exempt from the standard have previously been exempted in accordance with the procedures of 49 CFR part 543 and 49 U.S.C. 33106.

Similarly, the low-theft lines listed as being subject to the parts-marking standard have previously been designated in accordance with the procedures set forth in 49 U.S.C. 33103.

Therefore, NHTSA finds for good cause that notice and opportunity for comment on these listings are unnecessary. Further, public comment on the listing of selections and exemptions is not contemplated by 49 U.S.C. Chapter 331.

For the same reasons, since this revised listing only informs the public of previous agency actions and does not impose additional obligations on any party, NHTSA finds for good cause that the amendment made by this notice should be effective as soon as it is published in the **Federal Register**.

Regulatory Impacts

1. Costs and Other Impacts

NHTSA has analyzed this rule and determined that it is not ''significant'' within the meaning of the Department of Transportation's regulatory policies and procedures. The agency has also considered this notice under Executive Order 12866. As already noted, the selections in this final rule have previously been made in accordance with the provisions of 49 U.S.C. 33104, and the manufacturers of the selected lines have already been informed that those lines are subject to the requirements of 49 CFR part 541 for MY 2001. Further, this listing does not actually exempt lines from the requirements of 49 CFR part 541; it only informs the general public of all such previously granted exemptions. Since the only purpose of this final listing is to inform the public of actions for MY 2001 that the agency has already taken, a full regulatory evaluation has not been prepared.

2. Regulatory Flexibility Act

The agency has also considered the effects of this listing under the Regulatory Flexibility Act. I hereby certify that this rule will not have a significant economic impact on a substantial number of small entities. As noted above, the effect of this final rule is simply to inform the public of those lines that are already subject to the requirements of 49 CFR part 541 for MY 2001. The agency believes that the listing of this information will not have any economic impact on small entities.

3. Environmental Impacts

In accordance with the National Environmental Policy Act of 1969, the agency has considered the environmental impacts of this rule, and determined that it will not have any significant impact on the quality of the human environment.

4. Federalism

This action has been analyzed in accordance with the principles and criteria contained in Executive Order 12612, and it has been determined that this final rule does not have sufficient

Federalism implications to warrant the preparation of a Federalism Assessment.

5. Civil Justice Reform

This final rule does not have a retroactive effect. In accordance with section 33118 when the Theft Prevention Standard is in effect, a State or political subdivision of a State may not have a different motor vehicle theft prevention standard for a motor vehicle or major replacement part. 49 U.S.C. 33117 provides that judicial review of this rule may be obtained pursuant to 49 U.S.C. 32909. Section 32909 does not require submission of a petition for reconsideration or other administrative proceedings before parties may file suit in court.

List of Subjects in 49 CFR Part 541

Administrative practice and procedure, Labeling, Motor vehicles, Reporting and recordkeeping requirements.

In consideration of the foregoing, 49 CFR Part 541 is amended as follows:

PART 541—[AMENDED]

1. The authority citation for Part 541 continues to read as follows:

Authority: 49 U.S.C. 33102–33104 and 33106; delegation of authority at 49 CFR 1.50.

2. In Part 541, Appendices A, A–I, A–II and B are revised to read as follows:

APPENDIX A TO PART 541.—LINES SUBJECT TO THE REQUIREMENTS OF THIS STANDARD

Manufacturer	Subject lines
ALFA ROMEO	Milano 161.
	164.
BMW	Z3.
	6 Car Line.
CONSULIER	Consulier GTP.
DAEWOO	Korando.
	Musso (MPV) [1].
	Nubira.
DAIMLERCHRYSLER	Chrysler Cirrus.
	Chrysler Fifth Avenue/Newport.
	Chrysler Laser.
	Chrysler LeBaron/Town & Country.
	Chrysler LeBaron GTS.
	Chrysler's TC.
	Chrysler New Yorker Fifth Avenue.
	Chrysler Sebring.
	Chrysler Town & Country.
	Dodge 600.
	Dodge Aries.
	Dodge Avenger.
	Dodge Colt.
	Dodge Daytona.
	Dodge Diplomat.
	Dodge Lancer.
	Dodge Neon.
	Dodge Shadow.
	Dodge Stratus.
	Dodge Stealth.
	Eagle Summit.
	Eagle Talon.
	Jeep Cherokee (MPV).
	Jeep Grand Cherokee (MPV).
	Jeep Wrangler (MPV).
	Plymouth Caravelle.
	Plymouth Colt.
	Plymouth Laser.
	Plymouth Gran Fury.
	Plymouth Neon.
	Plymouth Reliant.
	Plymouth Sundance.
	Plymouth Breeze.
FERRARI	Mondial 8.
	328.
FORD	Ford Aspire.
	Ford Escort.
	Ford Probe.
	Ford Thunderbird.
	Lincoln Continental.
	Lincoln Mark.
	Lincoln Town Car.
	Mercury Capri.
	Mercury Cougar.
	Merkur Scorpio.
	Merkur XR4Ti.
GENERAL MOTORS	Buick Electra.
	Buick Reatta.
	Buick Skylark.

APPENDIX A TO PART 541.—LINES SUBJECT TO THE REQUIREMENTS OF THIS STANDARD—Continued

Manufacturer	Subject lines
	Chevrolet Malibu.
	Chevrolet Nova.
	Chevrolet Blazer (MPV).
	Chevrolet Prizm.
	Chevrolet Venture (MPV).
	Chevrolet S–10 Pickup.
	Geo Storm.
	Chevrolet Tracker (MPV).
	GMC Jimmy (MPV).
	GMC Sonoma Pickup.
	Oldsmobile Achieva (MYs 1997–1998).
	Oldsmobile Bravada.
	Oldsmobile Cutlass.
	Oldsmobile Cutlass Supreme (MYs 1988–1997).
	Oldsmobile Intrigue.
	Pontiac Fiero.
	Pontiac Grand Prix.
	Saturn Sports Coupe.
HONDA	Accord.
	CRV (MPV).
	Odyssey (MPV).
	Passport.
	Prelude.
	S2000.
	Acura Integra.
	Acura MDX (MPV) [1].
HYUNDAI	Accent.
	Sonata.
	Tiburon.
ISUZU	Amigo [2].
	Impulse.
	Rodeo.
	Rodeo Sport.
	Stylus.
	Trooper/Trooper II.
	VehiCross (MPV).
JAGUAR	XJ.
KIA MOTORS	Optima [1].
	Rio [1].
	S–II.
LOTUS	Elan.
MASERATI	Biturbo.
	Quattroporte.
	228.
MAZDA	626.
	MX–3.
	MX–5 Miata.
	MX–6.
MERCEDES-BENZ	190 D.
	190 E.
	260E (1987–1989).
	300 SE (1988–1991).
	300 TD (1987).
	300 SDL (1987).
	300 SEL.
	350 SDL (1990–1991).
	420 SEL (1987–1991).
	560 SEL (1987–1991).
	560 SEC (1987–1991).
	560 SL.
MITSUBISHI	Cordia.
	Eclipse.
	Mirage.
	Montero (MPV).
	Montero Sport (MPV).
	Tredia.
	3000GT.
NISSAN	240SX.
	Sentra/200SX.
	Xterra.
PEUGEOT	405.
PORSCHE	924S.

APPENDIX A TO PART 541.—LINES SUBJECT TO THE REQUIREMENTS OF THIS STANDARD—Continued

Manufacturer	Subject lines
SUBARU	XT.
	SVX.
	Forester.
	Legacy.
SUZUKI	X90.
	MPV(nameplate not determined) [1].
	Sidekick (MYs 1997–1998).
	Vitara (MPV).
TOYOTA	Toyota 4-Runner (MPV).
	Toyota Avalon.
	Toyota Camry.
	Toyota Celica.
	Toyota Corolla/Corolla Sport.
	Toyota Echo.
	Toyota Highlander (MPV) [1].
	Toyota MR2.
	Toyota MR2 Spyder [1].
	Toyota RAV4 (MPV).
	Toyota Sienna (MPV).
	Toyota Tercel.
	Lexus IS300 [1].
	Lexus RX300 (MPV).
VOLKSWAGEN	Audi Quattro.
	Volkswagen Scirocco.

[1] 1 Lines added for MY 2001.
[2] 1 Renamed Isuzu Rodeo Sport beginning with MY 2001.

APPENDIX A–I—HIGH-THEFT LINES WITH ANTITHEFT DEVICES WHICH ARE EXEMPTED FROM THE PARTS-MARKING REQUIREMENTS OF THIS STANDARD PURSUANT TO 49 CFR PART 543

Manufacturer	Subject lines
AUSTIN ROVER	Sterling.
BMW	X5.[1].
	3 Car Line.
	5 Car Line.
	7 Car Line.
	8 Car Line.
DAIMLERCHRYSLER	Chrysler Conquest.
	Chrysler Imperial.
FORD	Mustang.
	Mercury Sable.[2]
	Taurus.
GENERAL MOTORS	Buick LeSabre.
	Buick Park Avenue.
	Buick Regal/Century.
	Buick Riviera.
	Cadillac Allante.
	Cadillac Deville.
	Cadillac Seville.
	Chevrolet Cavalier.
	Chevrolet Corvette.
	Chevrolet Impala/Monte Carlo.
	Chevrolet Lumina/Monte Carlo (MYs 1996–1999).[3]
	Chevrolet Malibu.[2]
	Oldsmobile Alero.
	Oldsmobile Aurora.
	Oldsmobile Toronado.
	Pontiac Bonneville.
	Pontiac Grand Am.
	Pontiac Sunfire.
HONDA	Acura CL.
	Acura Legend (MYs 1991–1996).
	Acura NSX.
	Acura RL.
	Acura SLX.
	Acura TL.
	Acura Vigor (MYs 1992–1995).
ISUZU	Impulse (MYs 1987–1991).
JAGUAR	XK8.
MAZDA	929.

APPENDIX A–I—HIGH-THEFT LINES WITH ANTITHEFT DEVICES WHICH ARE EXEMPTED FROM THE PARTS-MARKING REQUIREMENTS OF THIS STANDARD PURSUANT TO 49 CFR PART 543—Continued

Manufacturer	Subject lines
	RX–7.
	Millenia.
MERCEDES-BENZ	124 Car Line (the models within this line are):.
	260E.
	300D.
	300E.
	300CE.
	300TE.
	400E.
	500E.
	129 Car Line (the models within this line are):.
	300SL.
	500SL.
	600SL.
	SL320.
	SL500.
	SL600.
	202 Car Line (the models within this line are):.
	C220.
	C230.
	C280.
	C36.
	C43.
MITSUBISHI	Galant.
	Starion.
	Diamante.
NISSAN	Nissan Altima.
	Nissan Maxima.
	Nissan Pathfinder.[2]
	Nissan 300ZX.
	Infiniti I30.
	Infiniti J30.
	Infiniti M30.
	Infiniti QX4.
	Infiniti Q45.
PORSCHE	911.
	928.
	968.
	Boxster.
SAAB	900.
	9000.
TOYOTA	Toyota Supra.
	Toyota Cressida.
	Lexus ES.
	Lexus GS.
	Lexus LS.
	Lexus SC.
VOLKSWAGEN	Audi 5000S.
	Audi 100/A6.
	Audi 200/S4/S6.
	Audi Allroad Quattro (MPV).[2]
	Audi Cabriolet.
	Volkswagen Cabrio.
	Volkswagen Corrado.
	Volkswagen Golf/GTI.
	Volkswagen Jetta/Jetta III.
	Volkswagen Passat.

[1] Exempted in full beginning with MY 2000.
[2] Exempted in full beginning with MY 2001.
[3] Renamed Impala/Monte Carlo beginning with MY 2000.

APPENDIX A–II TO PART 541.—HIGH-THEFT LINES WITH ANTITHEFT DEVICES WHICH ARE EXEMPTED IN-PART FROM THE PARTS-MARKING REQUIREMENTS OF THIS STANDARD PURSUANT TO 49 CFR PART 543

Manufacturers	Subject lines	Parts to be marked
GENERAL MOTORS	Cadillac Eldorado	Engine, Transmission.
	Cadillac Concours	Engine, Transmission.
	Oldsmobile Ninety-Eight	Engine, Transmission.
	Pontiac Firebird	Engine, Transmission.

APPENDIX A–II TO PART 541.—HIGH-THEFT LINES WITH ANTITHEFT DEVICES WHICH ARE EXEMPTED IN-PART FROM THE PARTS-MARKING REQUIREMENTS OF THIS STANDARD PURSUANT TO 49 CFR PART 543—Continued

Manufacturers	Subject lines	Parts to be marked
	Chevrolet Camaro	Engine, Transmission.
	Oldsmobile Eighty-Eight	Engine, Transmission.

APPENDIX B—PASSENGER MOTOR VEHICLE LINES (EXCEPT LIGHT-DUTY TRUCKS) WITH THEFT RATES BELOW THE 1990/91 MEDIAN THEFT RATE, SUBJECT TO THE REQUIREMENTS OF THIS STANDARD

Manufacturer	Subject lines
Ford	Crown Victoria.
	Mercury Grand Marquis.
General Motors	Chevrolet Astro (MPV).
	GMC Safari (MPV).
Honda	Civic.

Issued on: May 22, 2000.

Stephen R. Kratzke,

Associate Administrator for Safety Performance Standards.

[FR Doc. 00–13273 Filed 5–25–00; 8:45 am]

BILLING CODE 4910–59–P

Proposed Rules

Federal Register
Vol. 65, No. 103
Friday, May 26, 2000

This section of the FEDERAL REGISTER contains notices to the public of the proposed issuance of rules and regulations. The purpose of these notices is to give interested persons an opportunity to participate in the rule making prior to the adoption of the final rules.

DEPARTMENT OF AGRICULTURE

Animal and Plant Health Inspection Service

7 CFR Parts 305 and 319

[Docket No. 98–030–1]

RIN 0579–AA97

Irradiation Phytosanitary Treatment of Imported Fruits and Vegetables

AGENCY: Animal and Plant Health Inspection Service, USDA.

ACTION: Proposed rule.

SUMMARY: We are proposing to establish regulations providing for use of irradiation as a phytosanitary treatment for fruits and vegetables imported into the United States. The irradiation treatment would provide protection against fruit flies and the mango seed weevil. This proposal would provide an alternative to the currently approved treatments (various fumigation, cold, and heat treatments, and systems approaches employing techniques such as greenhouse growing) against fruit flies and the mango seed weevil in fruits and vegetables.

DATES: We invite you to comment on this docket. We will consider all comments that we receive by July 25, 2000.

ADDRESSES: To submit a comment by postal mail, please send your comment and three copies to Docket No. 98–030–1, Regulatory Analysis and Development, PPD, APHIS, suite 3C03, 4700 River Road Unit 118, Riverdale, MD 20737–1238. Please state that your comments refer to Docket No. 98–030–1.

You may also file comments on this docket electronically, and review comments filed electronically, at the World Wide Web site http://comments.aphis.usda.gov.

You may read any comments that we receive by postal mail in our reading room. The reading room is located in room 1141 of the USDA South Building, 14th Street and Independence Avenue, SW., Washington, DC, between 8 a.m. and 4:30 p.m., Monday through Friday, except holidays. Persons wishing to inspect comments are requested to call ahead on (202) 690–2817 to facilitate entry into the comment reading room.

FOR FURTHER INFORMATION CONTACT: For general program and phytosanitary issues, contact Donna L. West, Import Specialist, Phytosanitary Issues Management, PPQ, APHIS, 4700 River Road Unit 140, Riverdale MD 20737–1236; (301) 734–6799. For technical irradiation issues, contact Dr. Arnold Foudin, Assistant Director, Scientific Services, PPQ, APHIS, 4700 River Road Unit 147, Riverdale, MD 20737–1237; (301) 734–7710.

SUPPLEMENTARY INFORMATION:

Background

I. Introduction
II. Critical Control Points: Dose, Dosimetry, Safeguards
III. Irradiation Doses to Control Fruit Flies and Seed Weevils in Fruits and Vegetables
IV. Dosimetry and Dose Control Issues
V. Safeguards for Different Irradiation Situations
VI. Proposed Regulatory Framework for Irradiation Treatments
VII. Proposed Changes to Fruits and Vegetables Import Regulations
VIII. Compliance With Executive Orders, Regulatory Flexibility Act, National Environmental Policy Act, and Paperwork Reduction Act

I. Introduction

The Animal and Plant Health Inspection Service (APHIS) is aware of growing commercial interest in the use of irradiation as a treatment for agricultural products, both for food safety purposes (to kill pathogens and retard spoilage) and for phytosanitary purposes (to destroy plant pests). At least 38 countries have approved irradiation treatment of more than 40 foods or groups of related foods. In Europe more than 28 billion pounds of food are irradiated annually. With regard to phytosanitary irradiation treatments to control plant pests, the World Health Organization, the International Plant Protection Convention, and the North American Plant Protection Organization have endorsed the technology as effective and safe.

In anticipation of requests to allow the use of irradiation in APHIS' regulatory programs, we have been developing policies for evaluating irradiation methods and have been evaluating research on the efficacy of irradiation.

To set a framework for developing APHIS' irradiation policy, we published a notice entitled ''The Application of Irradiation to Phytosanitary Problems'' in the **Federal Register** on May 15, 1996 (61 FR 24433–24439, Docket No. 95–088–1). Among other things, the notice discussed how APHIS, in collaboration with the Agricultural Research Service (ARS), would evaluate scientific research to determine the minimum irradiation doses necessary to kill or render sterile particular pests associated with particular articles. The notice emphasized that minimum dose levels are important and necessary, but that dose levels by themselves do not constitute a complete treatment schedule or an adequate regulatory framework. Treatment schedules, in addition to specifying minimum doses, may employ irradiation as a single treatment, as part of a multiple treatment, or as a component of a systems approach combined with other pest mitigation measures. The regulatory framework for employing irradiation treatments must also address system integrity or quality control issues, including methods to ensure that the irradiation is properly conducted so that the specified dose is achieved, and must address matters such as packaging or safeguarding of the treated articles to prevent reinfestation.

This proposed rule discusses these various issues and how they must be integrated to achieve effective irradiation treatments, and then proposes specific standards for an irradiation treatment for fruit flies and the mango seed weevil in imported fruits and vegetables.

II. Critical Control Points: Dose, Dosimetry, Safeguards

We have identified three critical control points in the activities involved in irradiating imported fruits and vegetables to prevent the spread of fruit flies and the mango seed weevil. These are points where errors will definitely reduce the long-term effectiveness of the treatment and where, on the other hand, correct procedure will ensure effective treatments.

The three critical control points are:

Dose: The dose of ionizing radiation, calculated in Gray, must be sufficient to

prevent adult emergence of each species of fruit fly in fruits and vegetables. Each dose is set at the lowest level that achieves this effect; the dose will not necessarily kill larvae immediately after treatment. These doses are based on research conducted by ARS and others, as discussed below.

It is important that the dose be set at the lowest effective level for regulatory, economic, and product quality reasons. The Food and Drug Administration has issued regulations providing that fruits and vegetables may receive up to 1 kiloGray (=1,000 Gray) of irradiation (21 CFR 179.26). This current limit of 1 kiloGray for fruits and vegetables is significant because industry irradiation methods can only ensure that all articles in an irradiated lot receive a guaranteed minimum dose, at the cost of having some articles in the lot subjected to two or three times the minimum dose. Therefore, to achieve a minimum absorbed dose of 250 Gray, some articles in a lot may be subjected to a dose of 750 Gray or more. Obviously, this encourages us to set the dose at the minimum effective level to avoid the possibility of any articles being subjected to a dose above 1 kiloGray. Also, the higher the dose, the greater the cost of the irradiation treatment. Finally, irradiation causes many fruits and vegetables to suffer changes in color and texture that increase at higher doses.

Dosimetry: If *establishing* the required dose correctly is the first critical control point, *delivering* the expected dose accurately and consistently is the second critical control point. Accurate dosimetry ensures that this happens. An effective dosimetry system is necessary to ensure that irradiated articles do in fact receive the minimum required dose of ionizing radiation. An inaccurate dosimetry system that records received doses as higher than they actually are could allow survival of fruit flies or mango seed weevils in treated articles. An inaccurate dosimetry system that records received doses as lower than they actually are could result in doses exceeding the 1 kiloGray limit, as well as unacceptable changes in the color and texture of the fruits and vegetables.

Safeguards: The third critical control point, safeguards, addresses the movement and identification of articles before and after they are irradiated. There is always a risk that treated articles may become reinfested with pests after treatment, and safeguards are necessary to control this risk. If the fruits and vegetables are irradiated after arriving in the United States, safeguards must also be employed to ensure that pests do not escape from articles en route through the United States to the irradiation facility. Finally, internal safeguards, such as recordkeeping, labeling, and monitoring and enforcement of regulatory requirements, are necessary to ensure that articles are not accidentally or intentionally presented as properly irradiated when they have not been.

III. Irradiation Doses To Control Fruit Flies and Seed Weevils in Imported Fruits and Vegetables

APHIS is now prepared to propose regulations providing for the use of irradiation as a phytosanitary treatment to control 11 species of fruit flies and one species of seed weevil in imported fruits and vegetables. Based on evaluation of research that is summarized in documents available upon request,[1] APHIS is proposing irradiation for each species as follows:

FRUIT FLIES AND SEED WEEVILS IN IMPORTED FRUITS AND VEGETABLES

Scientific name	Common name	Dose (gray)
Bactrocera dorsalis	Oriental fruit fly	250
Ceratitis capitata	Mediterranean fruit fly	225
Bactrocera cucurbitae	Melon fly	210
Anastrepha fraterculus	South American fruit fly	150
Anastrepha suspensa	Caribbean fruit fly	150
Anastrepha ludens	Mexican fruit fly	150
Anastrepha obliqua	West Indian fruit fly	150
Anastrepha serpentina	Sapote fruit fly	150
Bactrocera tryoni	Queensland fruit fly	150
Bactrocera jarvisi	(No common name)	150
Bactrocera latifrons	Malaysian fruit fly	150
Cryptorhynchus mangiferae	Mango seed weevil	100

ARS recommended these doses based on review of available literature, participation in workshops and meetings, discussions among ARS scientists, and verbal and written comments from numerous stakeholders and interested parties.

The recommended doses are sufficient to ensure probit 9 efficacy (a statistical estimation of 99.99683 percent mortality or sterility, corresponding to a survival rate of 32 fertile flies or weevils per million). The doses will almost entirely prevent emergence of live adults from irradiated fruits and vegetables.

ARS found sufficient data in its review of research[2] to recommend irradiation doses for 11 species of tephritid fruit flies and one species of seed weevil.

In 1986, minimum doses of 150 and 300 Gray were internationally proposed for quarantine security of tephritid fruit flies and all other arthropods, respectively (Loaharanu 1992). It was concluded that the dose of 150 Gray should prevent development of adult tephritid fruit flies capable of flight when eggs and larvae are irradiated, while 300 Gray should cause sterility to all stages of other insects and mites.

The first calculated estimates of doses to provide probit 9 security against fruit fly adult emergence were made by Balock *et al.* (1966). The probit 9

[1] ''Recommendation Irradiation Dose to Provide Quarantine Security for Commodities Infested with Certain Fruit Fly Species,'' Agricultural Research Service, April 7, 1995, and corollary APHIS memoranda. You may request these documents from the person identified above under **FOR FURTHER INFORMATION CONTACT,** or download them from http://www.aphis.usda.gov/ppd/irrad.

[2] Reports from many of the researchers cited in this document are available in a single compilation, ''Proceedings of the Final Research Coordination Meeting on Use of Irradiation as a Quarantine Treatment of Food and Agricultural Commodities, August 27–31 1990''; published by the International Atomic Energy Agency; U.S. distributor UNIPUB, Lanham, MD. Parties interested in irradiation research reports may also be interested in a huge bibliography on agricultural irradiation assembled by the Federal Research Center for Nutrition in Germany, and available on their Web site at http://www.dainet.de/bfe/english/thmliste.htm.

estimate of the irradiation dose that would prevent the emergence from fruit of adult Oriental fruit fly, *Bactrocera dorsalis* (Hendel), varied from 206 Gray in papaya to 280 Gray in a combination of eight different fruits. The fruits tested in this research ranged in size from Barbados cherry to tangerine and were infested with immature stages of the fruit fly ranging from egg to third instar. For melon fly, *Bactrocera cucurbitae* (Coquillett), combined data on irradiation of eggs through third instars in papaya, tomato, and cucumber gave a probit 9 estimate of 156 Gray. Two adult Mediterranean fruit flies, *Ceratitis capitata* (Wiedemann), emerged from approximately 1,300 early instar larvae in papayas treated at 100 Gray. However, the study's authors believed that these two flies resulted from post-treatment infestation because no adults emerged from papayas infested with approximately 19,000 early instars and treated with 25–75 Gray. No estimate of probit 9 security for *C. capitata* was offered. No tests using large numbers of *B. dorsalis* or *B. cucurbitae* were conducted at the estimated probit 9 doses; therefore, accuracy of these estimates was not confirmed.

Seo *et al.* (1973) subjected large numbers of fruit fly immatures inside fruits to irradiation doses ranging from 209 to 291 Gray. Doses as high as 244 Gray allowed some *B. dorsalis* to emerge as adults; it was not stated whether these adults were capable of flight. No irradiated *B. cucurbitae* immatures emerged as adults even at doses as low as 209 Gray. Two adult *C. capitata* emerged from an estimated 110,772 *C. capitata* immatures irradiated at 225 Gray. It was not mentioned whether either adult was capable of flight. Based on this study, Burditt and Seo (1971) recommended a dose of 210–250 Gray to prevent adult emergence of these three flies infesting tropical fruits in Hawaii.

Other studies dealt with irradiation of fruits infested with *B. dorsalis* and *C. capitata*. Although no adults emerged from an estimated 18,000 *B. dorsalis* third instars irradiated with 150 Gray in carambolas, emergence was less than 10 percent in the untreated control, indicating that the pupae were exposed to severe mortality factors unrelated to irradiation (Vijaysegaran *et al.* (1992)). A dose of 100 Gray prevented adult emergence of an estimated 131,148, 5- to 6-day-old *B. dorsalis* immatures irradiated in 250–300 gram ''Carabao'' mangoes (Manoto *et al.* (1992)). Komson *et al.* (1992) irradiated an estimated 173,042, 5-day-old *B. dorsalis* larvae reared at 27 (+/−2)°C in ''Nang Klangwan'' mangoes with 150 Gray with one adult survivor. Although no *C. capitata* adults emerged from an estimated 100,854 third instars in mangoes exposed to 150 Gray, 5 adults emerged from an estimated 5,268 larvae irradiated at that same dose in a previous test (Bustos *et al.* (1992)). Bustos *et al.* (1993) felt that 250 Gray was required to prevent development of adult *C. capitata* from irradiated larvae.

In Australia, various researchers have irradiated, at 50–100 Gray, a wide variety of fruits infested with large numbers of all immature stages of Queensland fruit fly, *Bactrocera tryoni* (Froggatt), with no apparently normal adult survivors. An estimated total of 566,714 ''old larvae'' were subjected to 75 Gray in five different fruits with no normal adult survivors. Heather *et al.* (1991) irradiated an estimated 110,935 eggs and 153,814 third instars of *Bactrocera jarvisi* (Tryon) in ''Kensington'' mangoes with 74–100 Gray and obtained no normal adult survivors.

Large numbers of five species of *Anastrepha* in fruits have been irradiated with doses of 50–150 Gray with no apparently normal adult survivors. However, von Windeguth (1986) found one apparently normal adult *A. suspensa* from an estimated 25,363 third instars in mangoes irradiated with 55 Gray.

Cherries infested with western cherry fruit fly, *Rhagoletis indifferens* Curran, were irradiated with a mean dose of 97 Gray, and one adult with vestigial wings emerged out of an estimated 15,812 immatures (Burditt and Hungate (1988)).

APHIS bases its proposed irradiation doses on the pertinent literature. The doses vary according to species, because the resistance of species varies. We propose to require a minimum dose of 250 Gray for *B. dorsalis* based on the study of Seo *et al.* (1973), who obtained 17 adults from a total of 490,289 larvae in papaya irradiated at a minimum dose of 244–252 Gray. At lower doses (214–225 Gray) in papaya, 5 of a total of 306,431 immatures developed to adults. Given the data of Seo *et al.* (1973), a dose of 250 Gray for *B. dorsalis* appears marginally effective at producing probit 9 security. However, it seems that the high survival rate at a dose of 244 Gray was atypical (17 adults emerged from 130,156 immature forms irradiated with 244 Gray), given that the study showed that fewer adults emerged at lower doses. No adults emerged when 155,903 immature forms in papayas were irradiated with 214 Gray. The only other large-scale studies with *B. dorsalis* used very high infestation levels and included few third instars, which may have reduced tolerance of the insects to irradiation (Komson *et al.* (1992); Manoto *et al.* (1992)).

We propose a minimum dose of 225 Gray for *C. capitata*. At 225 Gray, 2 of an estimated 110,772 *C. capitata* larvae completed development to the adult stage (Seo *et al.* (1973)). Furthermore, although no larvae of an estimated 100,854 third instar *C. capitata* in mangoes irradiated with 150 Gray became adults, the fact that 5 of 5,268 larvae did in an earlier test cannot be ignored (Bustos *et al.* (1992)).

We propose a minimum dose of 210 Gray for *B. cucurbitae* because at a dose of 209 Gray no *B. cucurbitae* larvae of an estimated 169,903 in bell peppers reached the adult stage (Seo *et al.* (1973)). The study's authors did not test lower doses, and no other studies using large numbers of *B. cucurbitae* have been conducted.

We propose a minimum dose of 150 Gray for eight other tephritid fruit flies: *B. tryoni, B. jarvisi, B. latifrons, A. fraterculus, A. suspensa, A. serpentina, A. ludens*, and *A. obliqua*. Although the research evidence shows that lower doses might suffice, a dose of 150 Gray should pose no greater problem to irradiation-tolerant commodities compared with lower doses, and it provides greater security.

We propose a minimum dose of 100 Gray for the mango seed weevil, *Cryptorhynchus mangiferae*, because research by ARS (Follett, 1999) has demonstrated that the weevils are effectively killed or sterilized at this dose.

IV. Dosimetry and Dose Control Issues

It is critical to ensure that articles actually receive the required dose during irradiation, since lower doses could allow pests to survive. Fortunately, the irradiation industry and researchers have spent decades developing and documenting effective systems for dosimetry. We are confident that facilities that correctly apply dosimetry guidance published by the American Society for Testing and Materials (ASTM) will be able to reliably measure the doses regulated articles receive.

The basic product delivered by businesses engaged in irradiation is an accurately measured dose of ionizing radiation, within the range requested by the customer, delivered to articles provided by the customer. Therefore, dosimetry is an integral part of these businesses' procedures, and APHIS does not need to address dosimetry in detail in this proposal, other than to require that the businesses follow good dosimetry practices to map, control, and record the radiation dose. Guidance and

requirements for dosimetry by ASTM, the U.S. Department of Energy, and APHIS, and supervision by responsible national agencies in foreign countries, establish the degree of dosimetry reliability needed to make this proposal work.

V. Safeguards for Different Irradiation Situations

Safeguards reduce risk by controlling the movement and identification of articles before and after they are irradiated. Safeguards include such matters as packaging, labeling, records, and irradiation facility construction and procedures. The types of safeguards needed to reduce risks will change with changing conditions. Certain safeguards are needed if the irradiation facility is located in an area infested with fruit flies, or if irradiated commodities leaving the facility en route to the United States will transit such an area where the risk is high that flies could oviposit in fruit after it is irradiated. These identical safeguards would not be needed if the irradiation takes place in an area not infested with fruit flies.

The actual safeguards needed for different situations are discussed below under ''Proposed Regulatory Framework for Irradiation Treatments.'' The goal of the safeguards is to address risks that are *not* fully addressed by the technical irradiation components of this proposal. Such risks include misidentification of articles so that untreated cartons are delivered labeled as treated, reinfestation of treated articles after treatment, and escape of fruit flies from articles in the United States prior to treatment.

Most of the safeguards we are proposing are based on previous operational experience that shows these safeguards to be effective when required to import fruits and vegetables that are subject to a variety of treatments under our regulations (e.g., fumigation, hot water dips, cold treatments). For instance, many existing treatments require the treated articles to be packed in insect proof cartons after treatment, and require labeling to distinguish treated from untreated cartons. The proposed safeguards concerning the allowed locations of irradiation facilities in the United States, and the routes untreated articles may follow to these facilities, are based on operational experience showing that the pests of concern cannot become established in the climate prevailing in the States where irradiation facilities would be allowed. The safeguards concerning records that irradiation facilities would have to keep (concerning lot identification, scheduled process, evidence of compliance with the scheduled process, ionizing energy source, source calibration, dosimetry, dose distribution in the product, and the date of irradiation) are based on procedures the irradiation industry has endorsed and found effective in documenting that various irradiated articles (e.g., medical supplies) receive the required dose of irradiation.

VI. Proposed Regulatory Framework for Irradiation Treatments

As discussed above, we have proposed, based on research data, the doses of radiation for imported fruits and vegetables that effectively prevent the emergence of living adult forms of 11 species of fruit flies and one species of seed weevil. The above discussion also explains how we propose to measure and verify delivery of the effective doses and that safeguards may be needed to prevent pest escape from products before treatment and reinfestation after treatment. These elements of irradiation treatment fit into the existing APHIS regulatory structure as follows.

First, we propose to establish a new part 305 in title 7 of the Code of Federal Regulations. The new part 305 would be titled ''Phytosanitary Treatments.'' At this time, this part would contain only the irradiation treatment schedules and procedures for treatment for 11 species of fruit flies and one species of seed weevil in fruits and vegetables. In the future, APHIS may add more of its existing and new treatments to part 305 to make it easier for customers to find treatments and to simplify cross-references in our regulations.

In addition to establishing a new part 305 to contain the irradiation treatment schedules, we also propose to make changes to ''Subpart—Fruits and Vegetables'' (7 CFR 319.56 through 319.56–8) to authorize the importation of articles irradiated in accordance with the new part 305.

New part 305 would also specify requirements for irradiation facilities performing the irradiation. These requirements would include procedures for approving the facility, monitoring facility operations, recordkeeping, dosimetry, and packaging of fruits and vegetables treated at the facility. These requirements in the new part 305 would be similar to existing APHIS regulations concerning irradiation treatments. These include regulations for moving regulated articles interstate from Mediterranean fruit fly quarantined areas (7 CFR 301.78–10), and regulations for moving certain fruits and vegetables interstate from Hawaii (7 CFR 318.13–4f).

Proposed § 305.1 would set forth definitions of the terms *Administrator, APHIS, Dose mapping, Dosimetry,* and *Dosimetry system.* The first two terms would use the same definitions commonly in use in other APHIS regulations. The final three terms would use definitions consistent with accepted nuclear industry use of those terms.

Proposed § 305.2(a) would set forth the common and scientific names of the fruit flies and seed weevil for which irradiation treatment is authorized and the dose in Gray required for each species.

Proposed § 305.2(b) would allow irradiation to be conducted prior to the arrival of articles in the United States, or after arrival, but would limit the location of facilities in the United States to certain northern States where the climate would preclude the successful establishment of the targeted fruit flies, *i.e.,* any State on the mainland United States except Alabama, Arizona, California, Florida, Georgia, Kentucky, Louisiana, Mississippi, Nevada, New Mexico, North Carolina, South Carolina, Tennessee, Texas, and Virginia. We propose this location restriction as a safeguard against the possibility that, despite container and movement restrictions designed to prevent this possibility, fruit flies could escape from regulated articles in the United States prior to treatment. Paragraph (b) also would provide that fruits and vegetables to be irradiated may not move into or through the States listed above prior to treatment, except that Dallas/Fort Worth, TX, would be an authorized stop for air cargo or a transloading location for shipments that arrive by air but that are subsequently transloaded into trucks for overland movement from Dallas/Fort Worth into an authorized State by the shortest route. Dallas/Fort Worth would be an exception because the transloading facility at the airport is under USDA supervision, and both the facility procedures and the climate and host material in the immediate area minimize the risk that fruit flies could escape and become established.

This geographic restriction of irradiation facilities to States where fruit flies would not survive the winter may be reevaluated later if evidence from irradiation operations shows the risk of fruit fly escape and spread from the facilities to be insignificant.

Proposed § 305.2(c) and (d) would require that facilities conducting authorized irradiation treatments, and importers moving articles to such facilities in the United States, must do so under a compliance agreement with APHIS.

Proposed § 305.2(e) would require that facilities conducting irradiation treatments be certified by the Administrator of APHIS. Certification would not expire after a fixed time; however, a facility would have to be recertified after an increase or decrease in radioisotope, natural deterioration of the radioisotope, a major modification to equipment that affects the delivered dose, or a change in the owner or manager of the facility. Recertification also may be required in cases where a significant variance in dose delivery has been measured by the dosimetry system.

In order to be certified, a facility would have to be capable of administering the minimum absorbed ionizing radiation doses and be constructed according to specified standards so that treated and untreated fruits and vegetables are kept in separate locations with a physical barrier between them to prevent the transfer of cartons. Treated and untreated fruits and vegetables could be separated with barriers such as a 6-foot wall or chain link fence to minimize interference with facility operations and visibility.

It might seem that an insect proof barrier should separate the areas for untreated and treated articles. Obviously, a chain link barrier would not prevent flies from emerging from fruits on the untreated side, flying to the treated side, and leaving the facility in fruit that has been irradiated. However, we believe an insect proof barrier in the facility is unnecessary because it is extremely unlikely that fruit and vegetable shipments, moved by air freight and irradiated on speedy industrial schedules, would be around long enough prior to treatment for fruit flies to hatch, emerge, and spread to the untreated side of the facility. Larvae and pupae, if any are present in the articles, are not mobile enough to move from untreated cartons to treated cartons. Adult flies are unlikely to be present with commercial fruit, which is usually shipped before it is fully ripe. Therefore, an insect proof barrier separating the facility areas for treated and untreated articles is not needed.

Another safeguard in proposed § 305.2(e) provides that a facility in the United States would only be approved to irradiate imported regulated articles if the Administrator determines that regulated articles would be safely transported to the facility from the port of arrival without diversion to any other destination, and without significant risk that plant pests will escape in transit or while the regulated articles are at the facility. The compliance agreement for a facility located in the United States would require the facility to comply with additional requirements to prevent escape of plant pests from the articles prior to their treatment. One of these requirements would be prompt irradiation of the fruits and vegetables to minimize the risk that fruit flies could emerge from the articles and spread to treated articles and reinfest them.

Proposed § 305.2(f) concerns monitoring of treatments. Treatment in U.S. and foreign facilities would have to be monitored by an APHIS inspector, who would also inspect treatment records and make unannounced inspections of the facility. We propose to require facilities that carry out continual irradiation operations to notify an inspector at least 24 hours before the date operations commence. Facilities that carry out periodic irradiation operations would have to notify an inspector at least 24 hours before scheduled operations.

We believe this level of monitoring is necessary to ensure that irradiation is effectively conducted. Monitoring and verification are extremely important to ensure the integrity of the entire system for irradiating imported fruits and vegetables. This is because there is no practical way for an inspector to determine, based on physical evidence from the commodity itself, that a commodity has been irradiated. Irradiation leaves no residue and usually causes no discernable change to the commodity's color or texture. In addition, an effective irradiation treatment may not kill all larvae, but instead might prevent adult emergence. In cases where an inspector at the port of arrival encounters live larvae of the target pest in a shipment that is documented as irradiated, it is extremely important that the documentation and procedures of the irradiation treatment system allow the inspector to determine with full confidence that the commodity was properly treated according to APHIS requirements.

Proposed § 305.2(g) prescribes requirements for the packaging of irradiated fruits and vegetables.

First, all irradiated fruits and vegetables must be shipped in the same cartons in which they are irradiated, and no irradiated fruits or vegetables may be shipped in the same carton with nonirradiated fruits and vegetables. This is to prevent confusion as to the treatment status of the articles.

In addition, fruits and vegetables irradiated before arrival in the United States would have to be packaged as follows:

The cartons must be insect proof unless the treated fruits and vegetables are stored in an insect proof room after irradiation and are wrapped on their pallets in insect proof polyethylene, shrink wrap, or fine netting before being shipped to the United States. If insect proof cartons are employed, they may have no openings that could allow the entry of fruit flies, and must be sealed with seals that will visually indicate if the cartons have been opened. The cartons may be constructed of any material that prevents the entry of fruit flies and prevents oviposition by fruit flies into the articles in the carton.

We also propose the following pallet security requirement for articles irradiated prior to arrival in the United States, regardless of whether insect proof cartons are employed. In order to ensure that no cartons are added to or removed from a pallet load of cartons containing irradiated fruits or vegetables, pallet loads would have to be wrapped in one of the following ways: With polyethylene sheet wrap, with net wrapping, or with strapping so that each carton on an outside row of the pallet load is constrained by a metal or plastic strap.

We further propose to require that pallet loads of irradiated fruits and vegetables be marked with irradiation lot numbers, packing and irradiation facility identification and locations, and dates of packing and irradiation. If the pallet load is broken down into smaller units before or during the process of entering the United States, the individual cartons would have to be labeled with this information. This information would allow an inspector to identify the irradiation lots and trace them back to the packing and irradiation facilities. While this labeling imposes some burden on the importer, some of the information, *e.g.,* identification of the packer, is already normally required for imported fruits and vegetables, and irradiation facilities routinely label treated articles with the identity of the irradiation facility, the lot number, and the treatment date upon request. This labeling is normally done for each pallet, but other arrangements may be made if the pallet is to be broken into smaller units prior to entry into commerce in the United States. Irradiation facilities have indicated that they can work with customers to minimize the cost and inconvenience of such labeling, *e.g.,* by providing customers with preassigned lot numbers so they can be printed on the cartons along with the packer's name.

We are not proposing any special packaging requirements for articles to be irradiated in facilities in the United States. Untreated fruits and vegetables imported for irradiation in the United States may be packed in ventilated

cartons that are not insect-proof. The cartons will generally be imported in shipping containers that are not opened until they reach the facility, and importers must sign compliance agreements with APHIS that will ensure against diversion of the shipment to a destination other than treatment, and against possible releases of fruit flies en route. No additional packing requirements appear necessary because the articles are destined for irradiation facilities in States where fruit flies cannot become established and spread.

Proposed § 305.2(h) concerns dosimetry requirements. We propose to require that absorbed dose be measured at the treatment facility using a dosimetry system that can accurately measure a minimum absorbed dose of 150, 210, 225, and 250 Gray, to match the required doses for the relevant species of fruit fly. We would require that the dosimetry system, including the number and placement of dosimeters used at the facility to measure the absorbed dose, be in accordance with standards of the American Society for Testing and Materials (ASTM). (See Designation E 1261–94, ''Standard Guide for Selection and Calibration of Dosimetry Systems for Radiation Processing,'' American Society for Testing and Materials, *Annual Book of ASTM Standards.*)

We considered proposing to require that each carton or other container of fruits or vegetables contain a radiation indicator that is placed in the carton or other container prior to irradiation and remains in place until after the fruits and vegetables have entered the United States. Such indicators, in the form of chemically impregnated stickers that change color after exposure to specified levels of ionizing radiation, are inexpensive and are in common use on cartons of medical supplies irradiated for sterility. This requirement would assist our inspectors by providing them with a tool to determine that a particular carton has been irradiated. Using such an indicator would also be a safeguard against fraudulent representations in paperwork that articles had been irradiated when they had not.

However, we have decided not to propose such a requirement at this time, for the following reasons. There are no indicator stickers currently on the market that change color in the 150–250 Gray range proposed in this document; the medical products indicators mentioned above react in the 1 kiloGray range. Also, such indicators are not accurate dosimeters and may in fact change color when exposed to conditions other than irradiation treatment (*e.g.,* intense sunlight or temperature changes). While further developments may eventually make such indicators useful for monitoring compliance with irradiation requirements for fruits and vegetables, we do not believe they would be useful now.

Proposed § 305.2(i) would require the treatment facility to maintain records of treatment for 1 year after each lot is treated. We would require the records to include the lot identification, scheduled process, evidence of compliance with the scheduled process, ionizing energy source, source calibration, dosimetry, dose distribution in the product, and the date of irradiation. All records would have to be available for review by APHIS inspectors during normal business hours. These detailed records are necessary to ensure system integrity for irradiation treatments and for successful enforcement of the regulations and identification of fraudulent documents or other violations. We believe that all of these records are already kept by irradiation facilities, either as normal business practice or as required by the Nuclear Regulatory Commission or State agencies.

Proposed § 305.2(j) and (k) describe how a person would request certification by APHIS of an irradiation facility, and how such certification could be denied or withdrawn by the Administrator.

Proposed § 305.2(l) states that the Department of Agriculture and its inspectors assume no responsibility for any loss or damage resulting from irradiation treatment. From the literature available, we believe the fruits and vegetables authorized for treatment under this section are tolerant to the minimum absorbed dose required by the treatment. However, the facility operator and shipper would be responsible for determination of tolerance. This paragraph also briefly describes the responsibilities of the Nuclear Regulatory Commission and the Food and Drug Administration in regulating irradiation facilities.

Damage to treated commodities is a significant issue for importers. In fact, one reason there is interest in irradiation treatments is that the treatment is effective against fruit flies in a number of tropical fruits and other articles that do not survive other treatments well; *e.g.,* papaya, rambutan, carambola, litchi. Some research has shown changes to fruit color and texture when they are irradiated at several times the required minimum dosage. This could be a problem because some irradiation facilities may subject the articles to two to three times the required minimum dose—either to ensure that all articles in a treated lot (both those nearest to and farthest from the radiation source) receive at least the required minimum dose, or because it is simply infeasible to expose the articles to the radiation source and then remove them quickly enough to achieve only the minimum required dose.

To illustrate this dose range problem, consider that, in a typical irradiation facility fruits may be treated while they are stacked in cartons on 4-by-4 foot pallets. When these stacks are exposed to the radiation source, an exposure long enough to result in the minimum required dose for the fruit in the center of the stack will result in a significantly higher dose for fruit on the outside of the stack, even if the stacks are rotated during irradiation. Also, some minimum required doses are so small that an entire stack of pallets need be exposed to the radiation source for 1 minute or less, but it is very difficult to move the stack of pallets through the irradiation chamber quickly enough to achieve only the minimum dose.

Therefore, persons using irradiation treatments on their commodities should pay close attention to the studies of effects on commodity quality of radiation doses over the level required by APHIS, and should understand the procedures employed by the irradiation facility and work with the facility to avoid doses that might negatively affect quality.

The following table [3] is presented to give some idea of the relative tolerances to irradiation of different fruits and vegetables.

IRRADIATION DOSES BELOW 1 KILOGRAY.—RELATIVE TOLERANCES OF FRUITS AND VEGETABLES

High	Apple, cherry, date, guava, longan, muskmelon, nectarine, papaya, peach, rambutan, raspberry, strawberry, tamarillo, tomato.

[3] Kader, A.A., 1986. ''Potential Applications of Ionizing Radiation in Postharvest Handling of Fresh Fruits and Vegetables,'' Food Technology, v. 40, no. 6, June 1986.

IRRADIATION DOSES BELOW 1 KILOGRAY.—RELATIVE TOLERANCES OF FRUITS AND VEGETABLES—Continued

Medium	Apricot, banana, cherimoya, fig, grapefruit, kumquat, loquat, litchi, orange, passion fruit, pear, pineapple, plum, tangelo, tangerine.
Low	Avocado, cucumber, grape, green bean, lemon, lime, olive, pepper, sapodilla, soursop, summer squash, leafy vegetables, broccoli, cauliflower.

This table should not be considered authoritative, as many variables affect radiation tolerance. For example, although grapes are considered to have low tolerance, in the past year grapes have been irradiated and moved from the Medfly-quarantined area in Florida, in accordance with § 301.78–10, without apparent effects on the quality of the fruit.

VII. Proposed Changes to the Fruits and Vegetables Import Regulations

As discussed above, in addition to establishing a new part 305 to contain the irradiation treatment requirements, this proposal would also make changes to the regulations to authorize the importation of fruits and vegetables using those treatments.

Regulations for importing fruits and vegetables are contained in ''Subpart—Fruits and Vegetables'' (7 CFR 319.56 through 319.56–8).

APHIS intends that irradiation, where available, may be substituted for, or used in conjunction with, any other treatment or special growing and handling conditions (systems approach) required by ''Subpart—Fruits and Vegetables'' or the Plant Protection and Quarantine Treatment Manual to mitigate the risk associated with any of the 11 species of fruit flies and one species of seed weevil named in this proposal. The fruits and vegetables regulations cover a large number of importation scenarios, and the requirements of the regulations depend on the risks presented by the particular article being imported. Fruits or vegetables imported from an area with no significant pests of concern may be imported without any treatment, subject only to inspection upon arrival. At the other extreme, fruits or vegetables imported from an area with several significant pests might have to undergo several different treatments to be eligible for importation.

''Subpart—Fruits and Vegetables'' contains a number of administrative instructions in §§ 319.56–2a through 319.56–2ee that specify unique combinations of treatments, procedures, and other tailored requirements to allow the safe importation of various articles. However, in recent years our policy has been to list most articles under one of two sections. Section 319.56–2t lists articles that may be imported from various foreign locations *without any required treatment,* subject to inspection and other activities at the port of arrival. Section 319.56–2x lists articles that may be imported from various foreign locations *only if they have been treated* in accordance with the Plant Protection and Quarantine (PPQ) Treatment Manual, which is incorporated into the regulations by reference at 7 CFR 300.1.

The PPQ Treatment Manual includes a number of fumigation, cold, and heat treatments to control the 11 species of fruit flies and one species of seed weevil that APHIS has determined can be controlled by irradiation of fruits and vegetables. Therefore, we propose to amend § 319.56–2x to state that the listed articles may be imported only if they have been either: (1) Treated in accordance with the PPQ Treatment Manual, or (2) treated by irradiation in accordance with 7 CFR part 305 if treatment is required by the PPQ Treatment Manual for one or more of the 11 species of fruit flies and one species of seed weevil listed in part 305.

There are also sections of ''Subpart—Fruits and Vegetables'' other than § 319.56–2x that require that some fruits and vegetables be treated or subjected to special growing and handling conditions (a systems approach) for fruit flies. For example, § 319.56–2h requires fumigation of grapes from Australia for several pests, including two fruit flies. Section 319.56–2k prescribes fumigation of grapes from many countries, and the pests of concern for this section are often fruit flies. Therefore, we also propose to add a new paragraph (k) to § 319.56–2 to allow substitution of irradiation for fruit fly treatments or systems approaches that are required by any section in ''Subpart—Fruits and Vegetables.'' New paragraph (k) would read ''Any fruit or vegetable that is required by this subpart or the Plant Protection and Quarantine Treatment Manual to be treated or subjected to other growing or inspection requirements to control one or more of the 11 species of fruit flies and one species of seed weevil listed in § 305.2(a) of this chapter as a condition of entry into the United States may instead be treated by irradiation in accordance with part 305 of this chapter.''

For example, § 319.56–2x currently allows importation of grapefruit and oranges from Mexico if they are treated in accordance with the PPQ Treatment Manual, which requires a cold treatment (T107) of these commodities for several species of fruit fly that attack grapefruit and oranges in Mexico. Because these species of fruit fly are among the 11 species listed in proposed part 305, grapefruit and oranges from Mexico could be imported subject to irradiation treatment instead of the cold treatment. Another example where irradiation treatment could be substituted would be kiwis and tangerines from Greece. Currently, the PPQ Treatment Manual requires either a cold treatment (T107(a)) or fumigation plus refrigeration (T108(a)) to control fruit flies in these articles from Greece. An example of a scenario where treatment for fruit flies is required by a different section of ''Subpart—Fruits and Vegetables'' would be grapes imported from Algeria under § 319.56–2k; if fruit flies are the only pest in that country requiring precooling and fumigation under § 319.56–2k, the grapes would be allowed to enter the United States if they receive an irradiation treatment instead. Another scenario under which the proposed irradiation treatment could be used in lieu of current regulatory requirements would be the current importation of pink or red tomatoes from Spain in accordance with § 319.56–2dd. To prevent the introduction of Mediterranean fruit fly, § 319.56–2dd imposes various requirements including greenhouse growing of the tomatoes, fruit fly trapping surveys in the greenhouse area, and shipping only during winter and early spring months. If this proposal is adopted, shippers of pink and red tomatoes from Spain could choose to irradiate them rather than meet the requirements of § 319.56–2dd.

These are examples of the simplest scenario under the present proposal, *i.e.,* importing articles when the only pests of concern are one or more of the 11 species of fruit flies. However, sometimes other pests that attack the articles will be present in the place of origin. If the regulations or the PPQ Treatment Manual require the article to be treated for these additional pests, the articles must receive any additional required treatment, in addition to irradiation for fruit flies or mango seed weevils.

The proposed irradiation doses are specific to the identified species of fruit fly or seed weevil but generic for the commodity. Any fruit or vegetable may be treated at the dose prescribed for the fruit fly of concern. The treatment for the fruit fly requiring the highest dose would be required when more than one species of fruit fly is a pest of concern.

VIII. Compliance With Executive Orders, Regulatory Flexibility Act, National Environmental Policy Act, and Paperwork Reduction Act

Executive Order 12866 and Regulatory Flexibility Act

This proposed rule has been reviewed under Executive Order 12866. The rule has been determined to be significant for the purposes of Executive Order 12866 and, therefore, has been reviewed by the Office of Management and Budget.

The economic analysis for the changes proposed in this document is set forth below. It provides a cost-benefit analysis as required by Executive Order 12866 and an analysis of the potential economic effects on small entities as required by the Regulatory Flexibility Act.

In accordance with 5 U.S.C. 603, we have performed an initial regulatory flexibility analysis regarding the effect of this proposed rule on small entities. Because we do not currently have all the data necessary for a comprehensive analysis of the effects of this rule on small entities, we are inviting comments concerning potential effects. In particular, we are interested in determining the number and kind of small entities that may incur benefits or costs from implementation of this proposed rule.

Under the Federal Plant Pest Act (7 U.S.C. 150aa–150jj) and the Plant Quarantine Act (7 U.S.C. 151–165 and 167), the Secretary of Agriculture is authorized to regulate the importation of plants, plant products, and other articles to prevent the introduction of injurious plant pests.

This proposed rule would permit the treatment of imported fruit and vegetables by irradiation, in place of or in conjunction with existing phytosanitary treatments or other protocols, for 11 species of fruit flies and one species of seed weevil. Irradiation could take place prior to shipment to the United States or after arrival. There would be requirements for certification of the facilities, treatment monitoring, pallet security, and recordkeeping for irradiation at all facilities, and packaging and labeling requirements for articles irradiated before arrival in the United States. Irradiation facilities would have to use an approved dosimetry system during treatment and keep records to verify effective irradiation. For irradiation after arrival, compliance agreements would impose requirements on the transit from ports to irradiation facilities, to ensure all shipments requiring irradiation are delivered to the facility and are not rerouted to sale prior to treatment.

Firms in the United States primarily affected by this proposed rule would be ones conducting the irradiation treatments. They could be variously classified by the Small Business Administration, depending on each one's particular business enterprises. A firm providing irradiation services strictly for the treatment of crops, including imported fruits and vegetables, would be included in the Standard Industry Classification (SIC) category 0723 (Crop Preparation Services, except Cotton Ginning). A firm would qualify as a small entity if it had annual revenues of $5 million or less. If a firm that imports or wholesales fruits and vegetables were to perform the irradiation itself, it would be included in SIC 5148 (Fresh Fruits and Vegetables), since its principal activity would remain importing or wholesaling. In this case, the firm would be designated as a small entity if it had 100 or fewer employees.

Firms expected to benefit most immediately from this proposed rule, however, would not belong in either of these SIC categories. They would be companies that currently provide irradiation services on contract for decontamination or sterilization purposes and could readily adapt to perform phytosanitary irradiation. They are classified within SIC 2099 (Food Preparations, N.E.C.) or SIC 2842 (Specialty Cleaning, Polishing, and Sanitation). The former category includes firms that irradiate food items, such as spices, seeds, culinary herbs, vegetable seasoning, and poultry, to destroy harmful pathogens. Included in SIC 2842 are firms that primarily provide irradiation services for the sterilization of medical devices, pharmaceutical preparations, and raw materials used in cosmetic products.

Four firms with SIC 2099 or 2842 designations have been identified that provide irradiation services on contract. For both categories, employment of 500 or fewer persons qualifies a firm as a small entity. Three of the four firms are considered small. (The fourth one had been a small entity until last year, when it was purchased by another corporation.)

Of these four companies, the one that is not a small entity is the only one engaged at present in phytosanitary irradiation. This firm treats papayas, carambolas, litchis, and other tropical fruits from Hawaii that are moved interstate to the mainland United States. Irradiation of the fruit in accordance with 7 CFR 318.13–4f, performed at facilities in Illinois, removes the risk of Mediterranean, Oriental, and melon fruit fly introduction, while also lengthening the shelf life of the fruit. Treatment of the Hawaiian fruit, however, is a small part of the firm's business; irradiation services are mainly provided for sterilization purposes through a network of facilities in nine States and Canada.

Similarly, the second of the four firms has 12 facilities throughout the United States, 8 of which are used for medical sterilizations and 4 for other purposes. One of the 12 facilities, located in southern California, has been adapted for irradiation of fruits and vegetables for the purpose of lengthening shelf life.

The other two firms that provide irradiation services are single-facility businesses. One, in Maryland, principally conducts medical and pharmaceutical sterilizations, and the other, in Florida, has been irradiating poultry products for the retail market and hospitals since 1993.

In addition to these four firms, companies that use irradiation to sterilize their own products could also benefit from this proposed rule by contracting their irradiation facilities for phytosanitary purposes. Location, throughput capacity, the irradiating processes used, and other characteristics of the facilities would help determine whether the cost of their services would be competitive in comparison to the cost of alternative methods of treatments.

While these firms are technologically capable of taking advantage of treatment opportunities afforded by this proposed rule, any economic effects on them will ultimately depend on the cost effectiveness of irradiation when compared to alternative phytosanitary treatments. A 1994 study sheds light on the benefits and costs of irradiation versus methyl bromide (MB) fumigation for the treatment of imported fruits and vegetables.[4] Economic benefits in this study were estimated in terms of preventing potential economic losses in U.S. fruit and vegetable markets that would result from discontinuation of MB as a fumigant for imports. In fiscal

[4] "Costs and Benefits of Irradiation Versus Methyl Bromide Fumigation for Disinfestation of U.S. Fruit and Vegetable Imports," by Kenneth W. Forsythe, Jr. and Phylo Evangelou, ERS Staff Report No. AGES 9412, March 1994.

year 1996, 14 percent of imported fruits, nuts, and vegetables, valued at about $345 million, were treated with MB, 80 percent at U.S. ports and 20 percent in preclearance programs in foreign locations.[5] Although temperature-modifying treatments are possible alternatives for some fruits and vegetables, MB fumigation is the principal, and sometimes sole, phytosanitary treatment available for many commodities.

The 1994 study focused on short-and medium-term costs and benefits of irradiation treatment in off-season U.S. import markets for grapes, nectarines, okra, peaches, and plums. Grapes comprise over 80 percent, by value, of imported fruits and vegetables fumigated with MB, but they have a low tolerance for irradiation. When grapes were included in the analysis, irradiation treatment costs, in 1998 dollars, ranged from 1.6 to 3.9 cents per pound. Excluding grapes, irradiation cost estimates ranged from 3.4 to 3.9 cents per pound.[6] These unit costs reflect the substantial economies of size that could be captured by irradiation facilities, due to the concentration of imported fruit at certain ports of arrival.

Preshipment and quarantine uses of MB, along with critical agricultural and emergency uses, are exempted from the MB phaseout required by the Clean Air Act.[7] These exemptions essentially segment the MB market into restricted and unrestricted parts. Demand for MB used for exempted purposes is expected to remain unaffected as its use as a soil fumigant is restricted. However, reduced production due to the phaseout may cause the price of MB used for phytosanitary purposes to rise, due to an increase in the unit cost of production. Most MB in the world is manufactured by only three companies, two in the United States and one in Israel. Whether their economies of production can be maintained will depend on the demand for MB for exempted purposes in the United States and other developed countries, and overall demand in developing countries (where final phaseout is scheduled under the Montreal Protocol for 2015).

The demand for irradiation as a treatment alternative will be influenced by product quality and phytotoxicity issues. Product shelf life can be extended by irradiation. Moreover, some fruits and vegetables that are damaged by fumigation or temperature-modifying treatments are tolerant of irradiation. On the other hand, as indicated above for grapes, some fruits and vegetables are considered not very tolerant of irradiation. Assuming consumers accept irradiation as a phytosanitary treatment, its use will be determined not only by the availability of alternative treatments and relative costs but also by its enhancing or diminishing effects on product quality.

When the latter range of unit costs (3.4 to 3.9 cents per pound) are applied to fumigated quantities of 11 varieties of fruits imported in fiscal year 1996 that have a high or medium tolerance of irradiation, costs of irradiation treatment range, in 1998 dollars, between $2.7 million and $3.1 million.[8] Applying MB fumigation costs assumed in the 1994 study, 0.6 to 1.2 cents per pound in 1998 dollars, yields a total treatment cost of $0.5 million to $0.9 million for this same set of imports. It is apparent that the use of irradiation for phytosanitary purposes is probably not a cost-competitive alternative to MB fumigation at present. However, the phaseout of MB as a soil fumigant may result in an increase in its unit cost of production, thereby making the cost of irradiation and other treatment alternatives more competitive.

Adopting this rule would broaden the choices among phytosanitary treatment alternatives for U.S. fruit and vegetable importers. No net societal gains and losses other than small price-related changes are expected from this proposed rule if irradiation is used only to treat fruits and vegetables that would have been imported otherwise using an alternative treatment. Income earned by firms providing the irradiation services would be income forgone by the displaced fumigators or other treatment providers. But if irradiation enables importations that would not otherwise occur, then societal gains (increased imports) could be attributed to its phytosanitary use. Irradiation treatment most likely will both serve as an alternative treatment for a fraction of current imports and stimulate additional imports for certain fruits and vegetables, such as papaya, that need to be treated for fruit flies and have a high tolerance for irradiation.

Allowing irradiation to be used as a phytosanitary treatment for 11 fruit fly species and one seed weevil species would most immediately benefit four firms, three of which are small entities, that currently provide irradiation services on contract for sterilization and decontamination purposes. Participation of these firms, and entry of other firms, in the treatment of imported fruits and vegetables will depend upon the demand that develops for irradiation in relation to alternative treatments.

The major alternative to this proposed rule would be to not allow these irradiation treatments. In that case, importers and irradiation businesses would not accrue the benefits described above, and firms providing existing treatment alternatives would continue operating as at present (with MB fumigation becoming less competitive as its supply is constrained).

This proposed rule contains various recordkeeping and reporting requirements. These requirements are described in this document under the heading ''Paperwork Reduction Act.''

Executive Order 12988

This proposed rule has been reviewed under Executive Order 12988, Civil Justice Reform. If this proposed rule is adopted: (1) All State and local laws and regulations that are inconsistent with this rule will be preempted; (2) no retroactive effect will be given to this rule; and (3) administrative proceedings will not be required before parties may file suit in court challenging this rule.

National Environmental Policy Act

An environmental assessment and finding of no significant impact have

[5] ''Quarantine Uses of Methyl Bromide by the United States, Fiscal Year 1996'' (Draft), APHIS-PPD-PAD, April 1997; available in the APHIS reading room (see **ADDRESSES**).

[6] To adjust irradiation unit costs estimated in the 1994 study from 1987 dollars to 1998 dollars, values are multiplied by a factor of 1.23 (producer price index for capital equipment, series ID: WPSSOP3200, Bureau of Labor Statistics, U.S. Dept. of Labor).

[7] Ten percent of methyl bromide used annually in agriculture in the United States is for commodity and quarantine treatment, compared to 85 percent for soil fumigation and 5 percent for structural fumigation. The 1999 Omnibus Consolidated and Emergency Supplemental Appropriations Act (Public Law 105–277) made specific changes to the Clean Air Act, to harmonize the U.S. phaseout of methyl bromide with the Montreal Protocol phaseout schedule for developed countries. This schedule requires U.S. methyl bromide production and importation reductions (from 1991 levels) of 25 percent in 1999, 50 percent in 2001, 70 percent in 2003, and 100 percent in 2005; exempted from this phaseout schedule are critical agricultural, emergency, and preshipment and quarantine uses. With respect to traded commodities, the amendment states that ''the [EPA] Administrator shall exempt the production, importation, and consumption of methyl bromide to fumigate commodities entering or leaving the United States or any State (or political subdivision thereof) for purposes of compliance with Animal and Plant Health Inspection Service requirements * * * '' (www.epa.gov/ozone/mbr/mbrqa.html).

[8] The 11 fruits are apricot, banana/plantain, grapefruit, orange, papaya, peach/nectarine, pineapple, plum, strawberry, tangerine, and tomato. The combined weight of import shipments of these fruits that were fumigated with MB in fiscal year 1996 was approximately 78.3 million pounds. This represented only 2.43 percent, by weight, of total imports of these 11 fruits (see, *op. cit.,* ''Quarantine Uses of Methyl Bromide by the United States, Fiscal Year 1996'' [Draft], Table 1). The range of costs is probably underestimated, since it assumes economies of size would be captured in all cases.

been prepared for this proposed rule. The assessment provides a basis for the conclusion that the irradiation methods proposed in this rule would not present a risk of introducing or disseminating plant pests and would not have a significant impact on the quality of the human environment. Based on the finding of no significant impact, the Administrator of the Animal and Plant Health Inspection Service has determined that an environmental impact statement need not be prepared.

The environmental assessment and finding of no significant impact were prepared in accordance with: (1) The National Environmental Policy Act of 1969, as amended (NEPA) (42 U.S.C. 4321 *et seq.*), (2) regulations of the Council on Environmental Quality for implementing the procedural provisions of NEPA (40 CFR parts 1500–1508), (3) USDA regulations implementing NEPA (7 CFR part 1b), and (4) APHIS' NEPA Implementing Procedures (7 CFR part 372).

Copies of the environmental assessment and finding of no significant impact are available for public inspection at USDA, room 1141, South Building, 14th Street and Independence Avenue, SW., Washington, DC, between 8 a.m. and 4:30 p.m., Monday through Friday, except holidays. Persons wishing to inspect copies are requested to call ahead on (202) 690–2817 to facilitate entry into the reading room. In addition, copies may be obtained by writing to the individual listed under **FOR FURTHER INFORMATION CONTACT.**

Paperwork Reduction Act

In accordance with section 3507(d) of the Paperwork Reduction Act of 1995 (44 U.S.C. 3501 *et seq.*), the information collection or recordkeeping requirements included in this proposed rule have been submitted for approval to the Office of Management and Budget (OMB). Please send written comments to the Office of Information and Regulatory Affairs, OMB, Attention: Desk Officer for APHIS, Washington, DC 20503. Please state that your comments refer to Docket No. 98–030–1. Please send a copy of your comments to: (1) Docket No. 98–030–1, Regulatory Analysis and Development, PPD, APHIS, suite 3C03, 4700 River Road Unit 118, Riverdale, MD 20737–1238, and (2) Clearance Officer, OCIO, USDA, room 404–W, 14th Street and Independence Avenue, SW., Washington, DC 20250. A comment to OMB is best assured of having its full effect if OMB receives it within 30 days of publication of this proposed rule.

We are proposing to authorize irradiation as a treatment for 11 species of fruit flies and one species of seed weevil in imported fruits and vegetables. This proposal would facilitate the importation of fruits and vegetables by giving importers another alternative to currently approved treatments required for articles attacked by these species of fruit flies and mango seed weevils.

Implementing this rule would necessitate the use of seven new paperwork collection activities (in the form of a compliance agreement, 24-hour notification, labeling requirements, dosimetry recordings, requests for dosimetry device approval, recordkeeping requirements, and requests for facility approval).

Labeling requirements represent a substantial part of the paperwork burden. The proposed rule would require that pallet loads of irradiated fruits and vegetables be marked by irradiation facility personnel or by the shipper with treatment lot numbers, packing and treatment facility identification and locations, and dates of packing and treatment. This information would allow an inspector to identify the treatment lots and trace them back to the packing and treatment facilities. The burden of this marking requirement would increase for importers who arrange to have pallet loads broken apart into individual cartons before entry into the United States, because, in such cases, individual cartons would have to bear the required information to allow successful traceback.

We are soliciting comments from the public (as well as affected agencies) concerning our proposed information collection and recordkeeping requirements. These comments will help us:

(1) Evaluate whether the proposed information collection is necessary for the proper performance of our agency's functions, including whether the information will have practical utility;

(2) Evaluate the accuracy of our estimate of the burden of the proposed information collection, including the validity of the methodology and assumptions used;

(3) Enhance the quality, utility, and clarity of the information to be collected; and

(4) Minimize the burden of the information collection on those who are to respond, such as through the use of appropriate automated, electronic, mechanical, or other technological collection techniques or other forms of information technology, e.g., permitting electronic submission of responses.

Estimate of burden: Public reporting burden for this collection of information is estimated to average .0825 hours per response.

Respondents: Irradiation facilities and shippers.

Estimated annual number of respondents: 125.

Estimated annual number of responses per respondent: 999.

Estimated annual number of responses: 124,885.

Estimated total annual burden on respondents: 10,305.

Copies of this information collection can be obtained from: Clearance Officer, OCIO, USDA, Room 404–W, 14th Street and Independence Avenue SW., Washington, DC 20250.

List of Subjects

7 CFR Part 305

Irradiation, Phytosanitary treatment, Plant diseases and pests, Quarantine, Reporting and recordkeeping requirements.

7 CFR Part 319

Bees, Coffee, Cotton, Fruits, Honey, Imports, Logs, Nursery Stock, Plant diseases and pests, Quarantine, Reporting and recordkeeping requirements, Rice, Vegetables.

Accordingly, we propose to amend title 7, chapter III, of the Code of Federal Regulations as follows:

1. A new part 305 would be added to read as follows:

PART 305—PHYTOSANITARY TREATMENTS

Sec.
305.1 Definitions.
305.2 Irradiation treatment of imported fruits and vegetables for certain fruit flies and mango seed weevils.

Authority: 7 U.S.C. 150dd, 150ee, 150ff, 151–167, 450, 2803, and 2809; 21 U.S.C. 136 and 136a; 7 CFR 2.22, 2.80, and 371.2(c).

§ 305.1 Definitions.

The following definitions apply for the purposes of this part:

Administrator. The Administrator, Animal and Plant Health Inspection Service, United States Department of Agriculture, or any person delegated to act for the Administrator in matters affecting this part.

APHIS. The Animal and Plant Health Inspection Service, United States Department of Agriculture.

Dose mapping. Measurement of absorbed-dose within a process load using dosimeters placed at specified locations to produce a one-, two-, or three-dimensional distribution of absorbed dose, thus rendering a map of absorbed-dose values.

Dosimeter. A device that, when irradiated, exhibits a quantifiable

change in some property of the device that can be related to absorbed dose in a given material using appropriate analytical instrumentation and techniques.

Dosimetry system. A system used for determining absorbed dose, consisting of dosimeters, measurement instruments and their associated reference standards, and procedures for the system's use.

§ 305.2 Irradiation treatment of imported fruits and vegetables for certain fruit flies and mango seed weevils.

(a) Approved doses. Irradiation at the following doses for the specified fruit flies and seed weevils, carried out in accordance with the provisions of this section, is approved as a treatment for all fruits and vegetables:

IRRADIATION FOR FRUIT FLIES AND SEED WEEVILS IN IMPORTED FRUITS AND VEGETABLES

Scientific name	Common name	Dose (gray)
Bactrocera dorsalis	Oriental fruit fly	250
Ceratitis capital	Mediterranean fruit fly	225
Bactrocera cucurbitae	Melon fly	210
Anastrepha fraterculus	South American fruit fly	150
Anastrepha suspensa	Caribbean fruit fly	150
Anastrepha ludens	Mexican fruit fly	150
Anastrepha obliqua	West Indian fruit fly	150
Anastrepha serpentina	Sapote fruit fly	150
Bactrocera tryoni	Queensland fruit fly	150
Bactrocera jarvisi	(No common name)	150
Bactrocera latifrons	Malaysian fruit fly	150
Cryptorhynchus mangiferae	Mango seed weevil	100

(b) *Location of facilities.* Where certified irradiation facilities are available, an approved irradiation treatment may be conducted for any fruit or vegetable either prior to shipment to the United States or in the United States. Irradiation facilities certified under this section may be located in any State on the mainland United States except Alabama, Arizona, California, Florida, Georgia, Kentucky, Louisiana, Mississippi, Nevada, New Mexico, North Carolina, South Carolina, Tennessee, Texas, and Virginia. Prior to treatment, the fruits and vegetables to be irradiated may not move into or through any of the States listed in this paragraph, except that movement is allowed through Dallas/Fort Worth, Texas, as an authorized stop for air cargo, or as a transloading location for shipments that arrive by air but that are subsequently transloaded into trucks for overland movement from Dallas/Fort Worth into an authorized State by the shortest route.

(c) *Compliance agreement with importers and facility operators for irradiation in the United States.* If irradiation is conducted in the United States, both the importer and the operator of the irradiation facility must sign compliance agreements with the Administrator. In the facility compliance agreement, the facility operator must agree to comply with any additional requirements found necessary by the Administrator to prevent the escape, prior to irradiation, of any fruit flies that may be associated with the articles to be irradiated. In the importer compliance agreement, the importer must agree to comply with any additional requirements found necessary by the Administrator to ensure the shipment is not diverted to a destination other than treatment and to prevent escape of plant pests from the articles to be irradiated during their transit from the port of first arrival to the irradiation facility in the United States.

(d) *Compliance agreement with irradiation facilities outside the United States.* If irradiation is conducted outside the United States, the operator of the irradiation facility must sign a compliance agreement with the Administrator and the plant protection service of the country in which the facility is located. In this agreement, the facility operator must agree to comply with the requirements of this section, and the plant protection service of the country in which the facility is located must agree to monitor that compliance and to inform the Administrator of any noncompliance.

(e) *Certified facility.* The irradiation treatment facility must be certified by the Administrator. Recertification is required in the event of an increase or decrease in radioisotope, a major modification to equipment that affects the delivered dose, or a change in the owner or managing entity of the facility. Recertification also may be required in cases where a significant variance in dose delivery has been measured by the dosimetry system. In order to be certified, a facility must:

(1) Be capable of administering the minimum absorbed ionizing radiation doses specified in paragraph (a) of this section to the fruits and vegetables; [1]

(2) Be constructed so as to provide physically separate locations for treated and untreated fruits and vegetables, except that fruits and vegetables traveling by conveyor directly into the irradiation chamber may pass through an area that would otherwise be separated. The locations must be separated by a permanent physical barrier such as a wall or chain link fence 6 or more feet high to prevent transfer of cartons.

(3) If the facility is located in the United States, the facility will only be certified if the Administrator determines that regulated articles will be safely transported to the facility from the port of arrival without significant risk that plant pests will escape in transit or while the regulated articles are at the facility.

(f) *Treatment monitoring.* Treatment must be monitored by an inspector. This monitoring must include inspection of treatment records and unannounced inspections of the facility by an inspector. Facilities that carry out continual irradiation operations must notify an inspector at least 24 hours before the date operations commence.[2] Facilities that carry out periodic irradiation operations must notify an inspector of scheduled operations at least 24 hours before scheduled operations.

(g) *Packaging.* Fruits and vegetables that are irradiated in accordance with

[1] The maximum absorbed ionizing radiation dose and the irradiation of food is regulated by the Food and Drug Administration under 21 CFR part 179.

[2] Inspector means any employee of the Animal and Plant Health Inspection Service, or other person, authorized by the Administrator in accordance with law to enforce the provisions of the regulations of this part. Inspectors are assigned to local offices of the Animal and Plant Health Inspection Service, which are listed in telephone directories.

this section must be packaged in cartons in the following manner:

(1) All irradiated fruits and vegetables must be shipped in the same cartons in which they are irradiated. Irradiated fruits and vegetables may not be packaged for shipment in a carton with nonirradiated fruits and vegetables.

(2) For all fruits and vegetables irradiated prior to arrival in the United States:

(i) The fruits and vegetables to be irradiated must be packaged either:

(A) In insect-proof cartons that have no openings that will allow the entry of fruit flies. The cartons must be sealed with seals that will visually indicate if the cartons have been opened. The cartons may be constructed of any material that prevents the entry of fruit flies and prevents oviposition by fruit flies into the articles in the carton; [3] or

(B) In noninsect-proof cartons that are stored immediately after irradiation in a room completely enclosed by walls or screening that completely precludes access by fruit flies. If stored in noninsect-proof cartons in a room that precludes access by fruit flies, prior to leaving the room each pallet of cartons must be completely enclosed in polyethylene, shrink-wrap, or another solid or netting covering that completely precludes access to the cartons by fruit flies.

(ii) To preserve the identity of treated lots, each pallet-load of cartons containing the fruits and vegetables must be wrapped before leaving the irradiation facility in one of the following ways:

(A) With polyethylene shrink wrap;

(B) With net wrapping; or

(C) With strapping so that each carton on an outside row of the pallet load is constrained by a metal or plastic strap.

(iii) Packaging must be labeled with treatment lot numbers, packing and treatment facility identification and location, and dates of packing and treatment. Pallets that remain intact as one unit until entry into the United States may have one such label per pallet. Pallets that are broken apart into smaller units prior to or during entry into the United States must have the required label information on each individual carton.

(h) *Dosimetry systems at the irradiation facility.* (1) Dosimetry mapping must indicate the doses needed to ensure that all the commodity will receive the minimum dose prescribed.

(2) Absorbed dose must be measured using an accurate dosimetry system that ensures that the absorbed dose meets or exceeds the absorbed dose required by paragraph (a) of this section (150, 210, 225, or 250 Gray, depending on the target species of fruit fly).

(3) The utilization of the dosimetry system, including the number and placement of dosimeters used, must be in accordance with American Society for Testing and Materials (ASTM) standards.[4]

(i) *Records.* An irradiation processor must maintain records of each treated lot for 1 year following the treatment date and must make these records available for inspection by an inspector during normal business hours (8 a.m. to 4:30 p.m., Monday through Friday, except holidays). These records must include the lot identification, scheduled process, evidence of compliance with the scheduled process, ionizing energy source, source calibration, dosimetry, dose distribution in the product, and the date of irradiation.

(j) *Request for certification and inspection of facility.* Persons requesting certification of an irradiation treatment facility must submit the request for approval in writing to the Animal and Plant Health Inspection Service, Plant Protection and Quarantine, Oxford Plant Protection Center, 901 Hillsboro Street, Oxford, NC 27565. The initial request must identify the owner, location, and radiation source of the facility, and the applicant must supply additional information about the facility construction, treatment protocols, and operations upon request by APHIS if APHIS requires additional information to evaluate the request. Before the Administrator determines whether an irradiation facility is eligible for certification, an inspector will make a personal inspection of the facility to determine whether it complies with the standards of this section.

(k) *Denial and withdrawal of certification.* (1) The Administrator will withdraw the certification of any irradiation treatment facility upon written request from the irradiation processor.

(2) The Administrator will deny or withdraw certification of an irradiation treatment facility when any provision of this section is not met. Before withdrawing or denying certification, the Administrator will inform the irradiation processor in writing of the reasons for the proposed action and provide the irradiation processor with an opportunity to respond. The Administrator will give the irradiation processor an opportunity for a hearing regarding any dispute of a material fact, in accordance with rules of practice that will be adopted for the proceeding. However, the Administrator will suspend certification pending final determination in the proceeding if he or she determines that suspension is necessary to prevent the spread of any dangerous insect. The suspension will be effective upon oral or written notification, whichever is earlier, to the irradiation processor. In the event of oral notification, written confirmation will be given to the irradiation processor within 10 days of the oral notification. The suspension will continue in effect pending completion of the proceeding and any judicial review of the proceeding.

(l) *Department not responsible for damage.* This treatment is approved to assure quarantine security against the listed fruit flies. From the literature available, the fruits and vegetables authorized for treatment under this section are believed tolerant to the treatment; however, the facility operator and shipper are responsible for determination of tolerance. The Department of Agriculture and its inspectors assume no responsibility for any loss or damage resulting from any treatment prescribed or monitored. Additionally, the Nuclear Regulatory Commission is responsible for ensuring that irradiation facilities are constructed and operated in a safe manner. Further, the Food and Drug Administration is responsible for ensuring that irradiated foods are safe and wholesome for human consumption.

PART 319—FOREIGN QUARANTINE NOTICES

2. The authority citation for part 319 would continue to read as follows:

Authority: 7 U.S.C. 150dd, 150ee, 150ff, 151–167, 450, 2803, and 2809; 21 U.S.C. 136 and 136a; 7 CFR 2.22, 2.80, and 371.2(c).

3. In § 319.56–2, a new paragraph (k) would be added to read as follows:

§ 319.56–2 Restrictions on entry of fruits and vegetables.

* * * * *

(k) Any fruit or vegetable that is required by this subpart or the Plant Protection and Quarantine Treatment Manual to be treated or subjected to other growing or inspection requirements to control one or more of the 11 species of fruit flies and one

[3] If there is a question as to the adequacy of a carton, send a request for approval of the carton, together with a sample carton, to the Animal and Plant Health Inspection Service, Plant Protection and Quarantine, Oxford Plant Protection Center, 901 Hillsboro Street, Oxford, NC 27565.

[4] Designation E 1261–94, ''Standard Guide for Selection and Calibration of Dosimetry Systems for Radiation Processing,'' American Society for Testing and Materials, *Annual Book of ASTM Standards.*

species of seed weevil listed in § 305.2(a) of this chapter as a condition of entry into the United States may instead be treated by irradiation in accordance with part 305 of this chapter.

4. In § 319.56–2x, paragraph (a), the introductory text preceding the table would be revised to read as follows:

§ 319.56–2x Administrative instructions; conditions governing the entry of certain fruits and vegetables for which treatment is required.

(a) The following fruits and vegetables may be imported into the United States only if they have been treated in accordance with the Plant Protection and Quarantine (PPQ) Treatment Manual, which is incorporated by reference at § 300.1 of this chapter. Treatment by irradiation in accordance with part 305 of this chapter may be substituted for treatments in the PPQ Treatment Manual for the mango seed weevil *Cryptorhynchus mangiferae* or for one or more of the following 11 species of fruit flies: *Anastrepha ludens, Anastrepha obliqua, Anastrepha serpentina, Anastrepha suspensa, Bactrocera cucurbitae, Bactrocera dorsalis, Bactrocera tryoni, Bactrocera jarvisi, Bactrocera latifrons, and Ceratitis capitata.*

* * * * *

Done in Washington, DC, this 23rd day of May 2000.

Craig A. Reed,

Administrator, Animal and Plant Health Inspection Service.

[FR Doc. 00–13291 Filed 5–25–00; 8:45 am]

BILLING CODE 3410–34–U

DEPARTMENT OF AGRICULTURE

Rural Utilities Service

7 CFR Part 1792

RIN 0572–AB47

Seismic Safety

AGENCY: Rural Utilities Service, USDA.

ACTION: Proposed rule.

SUMMARY: The Rural Utilities Service (RUS) proposes to amend its regulations to update and simplify the requirements of the agency. This revised rule would provide RUS borrowers, grant recipients, Rural Telephone Bank (RTB) borrowers and the public with updated rules for compliance with seismic safety requirements for new building construction using RUS or RTB loan, grant or guaranteed funds or funds provided through lien accommodations or subordinations approved by RUS or RTB. The proposed revision would identify model codes and standards found to provide a required level of seismic safety.

DATES: Written comments must be received by RUS on or before July 25, 2000.

ADDRESSES: Written comments should be addressed to George J. Bagnall, Director, Electric Staff Division, U.S. Department of Agriculture, Rural Utilities Service, Room 1246 South Building, Stop 1569, 14th & Independence Ave., SW., Washington, DC 20250–1569. Telephone 202–720–1900. RUS requests a signed original and three copies of all comments (7 CFR 1700.4). Comments will be available for public inspection during regular business hours (7 CFR 1.27(b)).

FOR FURTHER INFORMATION CONTACT: Mr. Donald Heald, Structural Engineer, Transmission Branch, Electric Staff Division, Rural Utilities Service, U.S. Department of Agriculture, 1400 Independence Avenue, SW, STOP 1569, Washington, DC 20250–1569. Telephone: (202) 720–9102. Fax: (202) 720–7491.

SUPPLEMENTARY INFORMATION:

Executive Order 12866

This proposed rule has been determined to be not significant for purposes of Executive Order 12866 and, therefore, has not been reviewed by the Office of Management and Budget (OMB).

Executive Order 12372

This proposed rule is excluded from the scope of Executive Order 12372, Intergovernmental Consultation, which may require consultation with State and local offices. See the final rule related notice entitled ''Department Programs and Activities Excluded from Executive Order 12372'' (50 FR 47034).

Executive Order 12988

This proposed rule has been reviewed in accordance with Executive Order 12988, Civil Justice Reform. RUS has determined that this proposed rule meets the applicable standards provided in section 3 of the Executive Order. In addition, all State and local laws and regulations that are in conflict with this rule will be preempted; no retroactive effect will be given to this rule; and, in accordance with section 212(e) of the Department of Agriculture Reorganization Act of 1994 (7 U.S.C. 6912(e)) administrative appeal procedures, if any are required, must be exhausted prior to initiating litigation against the Department or its agencies.

Regulatory Flexibility Act Certification

The Administrator of RUS has determined that this rule will not have significant economic impact on a substantial number of small entities as defined in the Regulatory Flexibility Act (5 U.S.C. 601 *et seq.*). The RUS and RTB loan programs provide borrowers with loans at interest rates and terms that are more favorable than those generally available from the private sector. Borrowers, as a result of obtaining federal financing, receive economic benefits that exceed any direct cost associated with RUS regulations and requirements.

Information Collection and Recordkeeping Requirements

In accordance with the Paperwork Reduction Act of 1995 (44 U.S.C. chapter 35), RUS invites comments on this information collection for which RUS intends to request approval from the Office of Management and Budget (OMB).

Comments on this notice must be received by July 25, 2000.

Comments are invited on (a) whether the collection of information is necessary for the proper performance of the functions of the agency, including whether the information will have practical utility; (b) the accuracy of the agency's estimate of burden including the validity of the methodology and assumption used; (c) ways to enhance the quality, utility and clarity of the information to be collected; and (d) ways to minimize the burden of the collection of information on those who are to respond, including through the use of appropriate automated, electronic, mechanical, or other technological collection techniques on other forms of information technology.

Comments may be sent to F. Lamont Heppe, Jr., Director, Program Development and Regulatory Analysis, Rural Utilities Service, U.S. Department of Agriculture, 1400 Independence Ave., SW., Stop 1522, Room 4034 South Building, Washington, D.C. 20250–1522.

For further information contact Mr. Donald Heald, Structural Engineer, Transmission Branch, Electric Staff Division, Rural Utilities Service, U.S. Department of Agriculture, 1400 Independence Avenue, SW, STOP 1569, Washington, DC 20250–1569. Telephone: (202) 720–9102. Fax: (202) 720–7491.

Title: Seismic Safety of New Building Construction.

OMB Control Number: 0572–0099.

Type of Request: Revision of a currently approved collection.

Abstract: The Earthquake Hazards Reduction Act of 1977 (42 U.S.C. 7701

et seq.) was enacted to reduce risks to life and property through the National Earthquake Hazards Reduction Program (NEHRP). The Federal Emergency Management Agency (FEMA) is designated as the agency with the primary responsibility to plan and coordinate the NEHRP. This program includes the development and implementation of feasible design and construction methods to make structures earthquake resistant. Executive Order 12699 of January 5, 1990, Seismic Safety of Federal and Federally Assisted or Regulated New Building Construction, requires that measures to assure seismic safety be imposed on federally assisted new building construction.

The revision of 7 CFR Part 1792, Subpart C, Seismic Safety of Federally Assisted New Building Construction, will reduce the requirements by the borrower or grant recipient needed to comply with this part. This revision will also include RUS water and waste water borrowers previously under the former Famers Home Administration (FmHA) (Pub. L. 103–354, 108 Stat. 3178).

Estimate of Burden: Public reporting burden for this collection of information is estimated to average 1.5 hours per response.

Respondents: Small business or organizations.

Estimated Number of Respondents: 1,000.

Estimated Number of Responses per Respondent: 1.

Estimated Total Annual Burden on Respondents: 800.

Copies of this information collection can be obtained from Dawn Wolfgang, Program Development and Regulatory Analysis, at (202) 720–0812.

All responses to this information collection and recordkeeping notice will be summarized and included in the request for OMB approval. All comments will also become a matter of public record.

National Environmental Policy Act Certification

The Administrator of RUS has determined that this proposed rule will not significantly affect the quality of the human environment as defined by the National Environmental Policy Act of 1969 (42 U.S.C. 4321 *et seq.*) Therefore, this action does not require an environmental impact statement or assessment.

Catalog of Federal Domestic Assistance

The programs covered by this proposed rule are listed in the Catalog of Federal Domestic Assistance programs under numbers 10.850, Rural Electrification Loans and Loan Guarantees; 10.851, Rural Telephone Loans and Loan Guarantees; 10.852, Rural Telephone Bank Loans; 10.760, Water and Waste Disposal System for Rural Communities; 10.764, Resource Conservation Development Loans, and 10.765, Watershed Protection and Flood Prevention Loans.

This catalog is available on a subscription basis from the Superintendent of Documents, U.S. Government Printing Office, Washington, DC 20402–9325. Telephone: (202) 512–1800.

Unfunded Mandates

This rule contains no Federal mandates (under the regulatory provision of title II of the Unfunded Mandates Reform Act) for State, local, and tribal governments or the private sector. Thus, this proposed rule is not subject to the requirements of sections 202 and 205 of the Unfunded Mandates Reform Act.

Background

RUS requires borrowers and grant recipients to meet applicable requirements mandated by Federal statutes and regulations to obtain RUS financing. One such requirement is compliance with building safety provisions of the Earthquake Hazards Reduction Act of 1977, (42 U.S.C. 7701 *et seq.*) as implemented pursuant to Executive Order 12699, Seismic Safety of Federal and Federally Assisted or Regulated New Building Construction (3 CFR, 1990 Comp., pg. 269).

Subpart C of this part codifies the policies and requirements that RUS and RTB borrowers and grant recipients must meet for new building construction when using funds provided or guaranteed by RUS or RTB (or when obtained through a lien accommodation or subordination approved by RUS or RTB).

The Executive Order requires all Federal agencies to ensure that any new building which is leased for federal users or purchased or constructed with federal assistance is designed and constructed in accordance with appropriate seismic design standards. Those standards must be equivalent to or exceed the seismic safety levels in the National Earthquake Hazards Reduction Program (NEHRP) recommended provisions for the development of seismic regulations for new buildings. The Executive Order charges the Interagency Committee on Seismic Safety in Construction (ICSSC) with recommending appropriate and cost-effective seismic design, construction standards and practices.

The ICSSC has identified several model codes and standards that provide an acceptable level of seismic safety. The existing regulation in this subpart would be revised to identify new model codes or standards which are equivalent to the 1994 NEHRP Recommended Provisions for the Development of Seismic Regulations for New Buildings.

List of Subjects in 7 CFR Part 1792

Buildings and facilities, Electric power, Grant programs, Loan programs, Reporting and recordkeeping requirements, Rural area, Seismic safety, Telephone.

For reasons set for in the preamble, chapter XVII of title 7 of the Code of Federal Regulations is proposed to be amended as follows:

PART 1792—COMPLIANCE WITH OTHER FEDERAL STATUTES, REGULATIONS, AND EXECUTIVE ORDERS

1. The authority citation for part 1792 is revised to read as follows:

Authority: 7 U.S.C. 901 *et seq.,* 1921 *et seq.,* 6941 *et seq.,* and 42 U.S.C. 7701 *et seq.*

Subpart C—Seismic Safety

2. Section 1792.101 is amended by revising paragraph (b) and removing paragraphs (c), (d), & (e), to read as follows:

§ 1792.101 General.

* * * * *

(b) This subpart identifies acceptable seismic standards which must be employed in new building construction funded by loans, grants, or guarantees made by the Rural Utilities Service (RUS) or the Rural Telephone Bank (RTB) (or through lien accommodations or subordinations approved by RUS or RTB).

3. Section 1792.102 is amended by revising the definitions for ''RUS'' and ''Seismic,'' removing ''REA,'' and adding the definition of ''Model Code'' to read as follows:

§ 1792.102 Definitions.

* * * * *

Model Code—A building code developed for the adoption of local or state authorities or to be used as the basis of a local or state building code.

* * * * *

RUS—Rural Utilities Service, and for the purposes of this subpart, shall include the Rural Telephone Bank. For the purposes of RTB borrowers, as used in this subpart, RUS means RTB and Administrator means Governor.

Seismic—Related to or caused by earthquakes.

* * * * *

4. Sections 1792.103 and 1792.104 are revised to read as follows:

§ 1792.103 Seismic design and construction standards for new buildings.

(a) In the design and construction of federally assisted buildings, the borrowers and grant recipients must utilize the seismic provisions of the most recent edition of those standards and practices that are substantially equivalent to or exceed the seismic safety level in the most recent or immediately preceding edition of the NEHRP Recommended Provisions for the Development of Seismic Regulation for New Buildings.

(b) Each of the following model codes or standards has been found to provide a level of seismic safety substantially equivalent to that provided by the use of the 1994 NEHRP Recommended Provisions and appropriate for federally assisted new building construction:

(1) 1997 International Conference of Building Officials (ICBO) Uniform Building Code. Copies are available from ICBO, Austin Regional Office, 9300 Jollyville Road., Suite 101, Austin, Texas 78759–7455.

(2) 1995 American Society of Civil Engineers (ASCE) 7, *Minimum Design Loads for Buildings and Other Structures.* Copies are available from ASCE, 345 East 47th Street, New York, New York 10017–2398.

(c) The NEHRP Recommended Provisions for the Development of Seismic Regulations for New Buildings is available from the Office of Earthquakes and Natural Hazards, Federal Emergency Management Agency, 500 C Street, SW., Washington, DC 20472.

§ 1792.104 Seismic acknowledgments.

For each applicable building, borrowers and grant recipients must provide RUS a written acknowledgment from a registered architect or engineer responsible for the design stating that seismic provisions pursuant to § 1792.103(b) will be used in the design of the building. This acknowledgement will include the identification and date of the model code or standard that is used for the seismic design of the building project and the seismic factor for the building location.

Dated: May 15, 2000.

Jill Long Thompson,

Under Secretary, Rural Development.

[FR Doc. 00–13295 Filed 5–25–00; 8:45 am]

BILLING CODE 3410–15–P

FEDERAL HOUSING FINANCE BOARD

12 CFR Parts 900, 940, 950, 955 and 956

[No. 2000–20]

RIN 3069–AA98

Federal Home Loan Bank Acquired Member Assets, Core Mission Activities, Investments and Advances

AGENCY: Federal Housing Finance Board.

ACTION: Proposed rule; extension of public comment period.

SUMMARY: On May 3, 2000, the Federal Housing Finance Board (Finance Board) published a proposed rule in the **Federal Register** (65 FR 25676 (May 3, 2000)) that would: add a new part 955 to the Finance Board's regulations to authorize the Federal Home Loan Banks (Banks) to hold acquired member assets; amend the Finance Board's recently adopted part 940 to enumerate the types of core mission assets that must be addressed in the Banks' strategic business plans; and make related changes to the Finance Board's regulations governing the Banks' investment and advances authorities.

The Finance Board has received a number of requests for an extension of the June 2, 2000 deadline for written comments on the proposed rule. In order to provide interested parties ample opportunity to participate in the rulemaking process, the Finance Board is extending the comment period for the proposed rule from June 2, 2000 to June 15, 2000.

DATES: The comment period on the proposed rule is extended until June 15, 2000.

ADDRESSES: Comments should be mailed to: Elaine L. Baker, Secretary to the Board, by electronic mail at *bakere@fhfb.gov*, or by regular mail at the Federal Housing Finance Board, 1777 F Street, NW, Washington, DC 20006. Comments will be available for public inspection at this address.

FOR FURTHER INFORMATION CONTACT: James L. Bothwell, Director and Chief Economist, (202) 408–2821; Scott L. Smith, Deputy Director, (202) 408–2991; Ellen E. Hancock, Senior Financial Analyst, (202) 408–2906; Christina K. Muradian, Senior Financial Analyst, (202) 408–2584, Office of Policy, Research and Analysis; or Eric M. Raudenbush, Senior Attorney-Advisor, (202) 408–2932; Office of General Counsel, Federal Housing Finance Board, 1777 F Street, NW, Washington, DC 20006.

Dated: May 22, 2000.

By the Board of Directors of the Federal Housing Finance Board.

Bruce A. Morrison,

Chairman.

[FR Doc. 00–13254 Filed 5–25–00; 8:45 am]

BILLING CODE 6725–01–P

DEPARTMENT OF TRANSPORTATION

Coast Guard

33 CFR Part 165

[CGD05–00–015]

RIN 2115–AA97

Safety Zone; Atlantic Ocean, Virginia Beach, VA

AGENCY: Coast Guard, DOT.

ACTION: Notice of proposed rulemaking.

SUMMARY: The Coast Guard proposes establishing temporary safety zones for the Virginia Beach Fireworks displays, north of the Virginia Beach Fishing Pier, in the Atlantic Ocean. This action would restrict vessel traffic on the Atlantic Ocean within a 2500-foot radius of a fireworks=laden barge. The safety zone is necessary to protect mariners and spectators from the hazards associated with the fireworks display.

DATES: Comments and related material must reach the Coast Guard on or before June 5, 2000.

ADDRESSES: You may mail comments and related material to USCG Marine Safety Office Hampton Roads, 200 Granby Street, Norfolk, VA, or deliver them to the same address between 8 a.m. and 4 p.m., Monday through Friday, except Federal holidays. USCG Marine Safety Office Hampton Roads maintains the public docket for this rulemaking. Comments and materials received from the public, as well as documents indicated in this preamble as being available in the docket, will become part of this docket and will be available for inspection or copying at the above address between 8 a.m. and 4 p.m., Monday through Friday, except Federal holidays.

FOR FURTHER INFORMATION CONTACT: Chief Petty Officer Roddy Corr, project officer, USCG Marine Safety Office Hampton Roads, telephone number (757) 441–3290.

SUPPLEMENTARY INFORMATION:

Request for Comments

We encourage you to participate in this rulemaking by submitting comments and related material. If you do so, please include your name and

address, identify the docket number for this rulemaking (CGD05–00–015), indicate the specific section of this document to which each comment applies, and give the reason for each comment. Please submit all comments and related material in an unbound format, no larger than 8.5 by 11 inches, suitable for copying. The comment period for this regulation is 10 (ten) days. This time period is adequate since the events are well publicized in the local maritime community. In addition these events are held in the same area at about the same time each year with no objection. If you would like to know that your comments reached us, please enclose a stamped, self-addressed postcard or envelope. We will consider all comments and material received during the comment period. We may change this proposed rule in view of them.

Public Meeting

We do not now plan to hold a public meeting, but you may submit a request for a meeting by writing to USCG Marine Safety Office Hampton Roads at the address under **ADDRESSES** explaining why one would be beneficial. If we determine that one would aid this rulemaking, we will hold one at a time and place announced by a later notice in the **Federal Register**.

Background and Purpose

The city of Virginia Beach is sponsoring several fireworks events from July 9, 2000 through September 9, 2000. The fireworks will be fired from a barge in approximate position 36° 50.75′ N, 076°58.40′ W, which position is in the vicinity of the Virginia Beach Fishing Pier.

The purpose of these regulations is to promote maritime safety and protect the boating public from the hazards associated with a fireworks display. These regulations will provide a safety buffer around the fireworks-laden barge. The regulations will affect the movement of all vessels operating in the specified areas of the Atlantic Ocean.

Public notifications would be made prior to the event via marine information broadcasts.

Discussion of Proposed Rule

The Coast Guard is proposing to establish temporary safety zones for the Virginia Beach fireworks displays, north of the Virginia Beach Fishing Pier, in the Atlantic Ocean. The safety zones would restrict vessel traffic within a 2500-foot radius of a fireworks-laden barge, in approximate position 36°50.75′ N, 076° 58.40′ W. The safety zone is necessary to protect mariners and spectators from the hazards associated with the fireworks display.

The safety zone would be enforced from 9 p.m. until 11 p.m. on July 9, 2000—rain date July 15, 2000; July 16, 2000—rain date July 22, 2000; July 23, 2000—rain date July 29, 2000; July 30, 2000—rain date August 5, 2000; August 6, 2000—rain date August 12, 2000; August 13, 2000—rain date August 19, 2000; August 20, 2000—rain date August 26, 2000; August 27, 2000; September 2, 2000—rain date September 3, 2000; and September 9, 2000.

Regulatory Evaluation

This proposed rule is not a ''significant regulatory action'' under section 3(f) of Executive Order 12866 and does not require an assessment of potential costs and benefits under section 6(a)(3) of that Order. The Office of Management and Budget has not reviewed it under that Order. It is not ''significant'' under the regulatory policies and procedures of the Department of Transportation (DOT) (44 FR 11040; February 26, 1979).

We expect the economic impact of this proposed rule to be so minimal that a full Regulatory Evaluation under paragraph 10e of the regulatory policies and procedures of DOT is unnecessary. This proposed rule will only affect a limited area for two hours per event, alternative routes exist for maritime traffic, and advance notification via marine information broadcasts will enable mariners to plan their transit to avoid the safety zones.

Small Entities

Under the Regulatory Flexibility Act (5 U.S.C. 601 *et seq.*), we considered whether this proposed rule would have a significant economic impact on a substantial number of small entities. The term ''small entities'' comprises small businesses, not-for-profit organizations that are independently owned and operated and are not dominant in their fields, and governmental jurisdictions with populations of less than 50,000.

The Coast Guard certifies under 5 U.S.C. 605(b) that this rule will not have a significant economic impact on a substantial number of small entities.

This proposed rule would affect the following entities, some of which might be small entities: the owners or operators of vessels intending to operate or anchor in portions of the Atlantic Ocean off Virginia Beach, Virginia within a 2500-foot radius of a fireworks laden barge located in approximate position 36°50.75′ N, 076°58.40′ W.

These safety zones would not have a significant economic impact on a substantial number of small entities for the following reasons: This proposed rule only affects a limited area for two hours per event, alternative routes exist for maritime traffic, and advance notification via marine information broadcasts will enable mariners to plan their transit to avoid entering the safety zones.

If you think that your business, organization, or governmental jurisdiction qualifies as a small entity and that this rule would have a significant economic impact on it, please submit a comment (see **ADDRESSES**) explaining why you think it qualifies and how and to what degree this rule would economically affect it.

Assistance for Small Entities

Under section 213(a) of the Small Business Regulatory Enforcement Fairness Act of 1996 (Public Law 104–121), we want to assist small entities in understanding this proposed rule so that they can better evaluate its effects on them and participate in the rulemaking. If the rule would affect your small business, organization, or governmental jurisdiction and you have questions concerning its provisions or options for compliance, please contact Chief Petty Officer Roddy Corr, project officer, USCG Marine Safety Office Hampton Roads, telephone number (757) 441–3290.

Collection of Information

This proposed rule would call for no new collection of information under the Paperwork Reduction Act of 1995 (44 U.S.C. 3501 *et seq.*).

Federalism

We have analyzed this proposed rule under Executive Order 13132 and have determined that this rule does not have implications for federalism under that order.

Unfunded Mandates Reform Act

The Unfunded Mandates Reform Act of 1995 (2 U.S.C. 1531–1538) governs the issuance of federal regulations that require unfunded mandates. An unfunded mandate is a regulation that requires a state, local, or tribal government or the private sector to incur direct costs without the Federal Government's having first provided the funds to pay those unfunded mandate costs. This proposed rule would not impose an unfunded mandate.

Taking of Private Property

This proposed rule would not effect a taking of private property or otherwise

have taking implications under Executive Order 12630, Governmental Actions and Interference with Constitutionally Protected Property Rights.

Civil Justice Reform

This proposed rule meets applicable standards in sections 3(a) and 3(b)(2) of Executive Order 12988, Civil Justice Reform, to minimize litigation, eliminate ambiguity, and reduce burden.

Protection of Children

We have analyzed this proposed rule under Executive Order 13045, Protection of Children from Environmental Health Risks and Safety Risks. This proposed rule is not an economically significant rule and does not concern an environmental risk to health or risk to safety that may disproportionately affect children.

Environment

We considered the environmental impact of this proposed rule and concluded that under figure 2–1, paragraph (34)(g), of Commandant Instruction M16475.lC, this proposed rule is categorically excluded from further environmental documentation. A ''Categorical Exclusion Determination'' will be available in the docket where indicated under **ADDRESSES.**

List of Subjects

Harbors, Marine safety, Navigation (water), Reporting and recordkeeping requirements, Security measures, Waterways.

For the reasons discussed in the preamble, the Coast Guard proposes to amend 33 CFR part 165 as follows:

PART 165—[AMENDED]

1. The authority citation for Part 165 continues to read as follows:

Authority: 33 U.S.C. 1231; 50 U.S.C. 191; 33 CFR 1.05–1(g), 6.04–1, 6.04–6, and 160.5; 49 CFR 1.46. Section 165.100 is also issued under authority of Sec. 311, Pub. L. 105–383.

2. Add temporary section 165.T05–015 to read as follows:

§ 165.T05–015 Safety Zone; Atlantic Ocean, Virginia Beach, VA.

(a) *Location.* The following area is a safety zone: All waters of the Atlantic Ocean within a 2500-foot radius of a fireworks laden barge in approximate position 36°50.75′ N, 076°58.40′ W.

(b) *Captain of the Port.* Captain of the Port means the Commanding Officer of the Marine Safety Office Hampton Roads, Norfolk, VA or any Coast Guard commissioned, warrant, or petty officer who has been authorized to act on his behalf.

(c) *Regulations.* (1) All persons are required to comply with the general regulations governing safety zones found in section 165.23 of this part.

(2) Persons or vessels requiring entry into or passage through a safety zone must first request authorization from the Captain of the Port. The Coast Guard representative enforcing the safety zone can be contacted on VHF marine band radio, channels 13 and 16. The Captain of the Port can be contacted at telephone number (757) 484–8192.

(3) The Captain of the Port will notify the public of changes in the status of this safety zone by marine information broadcast on VHF marine band radio, channel 22 (157.1 MHz).

(d) *Effective Date.* This section will be enforced from 9 p.m. until 11 p.m. on the following dates:

(1) July 9, 2000—rain date July 15, 2000.

(2) July 16, 2000—rain date July 22, 2000.

(3) July 23, 2000—rain date July 29, 2000.

(4) July 30, 2000—rain date August 5, 2000.

(5) August 6, 2000—rain date August 12, 2000.

(6) August 13, 2000—rain date August 19, 2000.

(7) August 20, 2000—rain date August 26, 2000.

(8) August 27, 2000.

(9) September 2, 2000—rain date September 3, 2000.

(10) September 9, 2000.

Dated: May 22, 2000.

J.E. Schrinner,

Captain, U.S. Coast Guard, Captain of the Port, Hampton Roads.

[FR Doc. 00–13442 Filed 5–24–00; 3:14 pm]

BILLING CODE 4910–15–U

ENVIRONMENTAL PROTECTION AGENCY

40 CFR Part 55

[FRL–6706–7]

Outer Continental Shelf Air Regulations; Consistency Update for California

AGENCY: Environmental Protection Agency (EPA).

ACTION: Proposed rule—consistency update.

SUMMARY: EPA is proposing to update a portion of the Outer Continental Shelf (''OCS'') Air Regulations. Requirements applying to OCS sources located within 25 miles of states' seaward boundaries must be updated periodically to remain consistent with the requirements of the corresponding onshore area (''COA''), as mandated by section 328(a)(1) of the Clean Air Act, as amended in 1990 (''the Act''). The portion of the OCS air regulations that is being updated pertains to the requirements for OCS sources for which the Santa Barbara County Air Pollution Control District (Santa Barbara County APCD) and Ventura County Air Pollution Control District (Ventura County APCD) are the designated COAs. The intended effect of approving the OCS requirements for the above Districts, contained in the Technical Support Document, is to regulate emissions from OCS sources in accordance with the requirements onshore. The changes to the existing requirements discussed below are proposed to be incorporated by reference into the Code of Federal Regulations and are listed in the appendix to the OCS air regulations.

DATES: Comments on the proposed update must be received on or before June 26, 2000.

ADDRESSES: Comments must be mailed (in duplicate if possible) to: EPA Air Docket (Air–4), Attn: Docket No. A–93–16 Section XXI, Environmental Protection Agency, Air Division, Region 9, 75 Hawthorne St., San Francisco, CA 94105.

Docket: Supporting information used in developing the rule and copies of the documents EPA is proposing to incorporate by reference are contained in Docket No. A–93–16 Section XXI. This docket is available for public inspection and copying Monday–Friday during regular business hours at the following locations:

EPA Air Docket (Air–4), Attn: Docket No. A–93–16 Section XXI, Environmental Protection Agency, Air Division, Region 9, 75 Hawthorne St., San Francisco, CA 94105.

EPA Air Docket (LE–131), Attn: Air Docket No. A–93–16 Section XXI, Environmental Protection Agency, 401 M Street SW, Room M–1500, Washington, DC 20460.

A reasonable fee may be charged for copying.

FOR FURTHER INFORMATION CONTACT: Christine Vineyard, Air Division (Air–4), U.S. EPA Region 9, 75 Hawthorne Street, San Francisco, CA 94105, (415) 744–1197.

SUPPLEMENTARY INFORMATION:

I. Background

On September 4, 1992, EPA promulgated 40 CFR part 55,[1] which established requirements to control air pollution from OCS sources in order to attain and maintain federal and state ambient air quality standards and to comply with the provisions of part C of title I of the Act. Part 55 applies to all OCS sources offshore of the States except those located in the Gulf of Mexico west of 87.5 degrees longitude. Section 328 of the Act requires that for such sources located within 25 miles of a state's seaward boundary, the requirements shall be the same as would be applicable if the sources were located in the COA. Because the OCS requirements are based on onshore requirements, and onshore requirements may change, section 328(a)(1) requires that EPA update the OCS requirements as necessary to maintain consistency with onshore requirements.

Pursuant to § 55.12 of the OCS rule, consistency reviews will occur (1) at least annually; (2) upon receipt of a Notice of Intent under § 55.4; or (3) when a state or local agency submits a rule to EPA to be considered for incorporation by reference in part 55. This proposed action is being taken in response to the submittal of rules by two local air pollution control agencies. Public comments received in writing within 30 days of publication of this document will be considered by EPA before publishing a final rule.

Section 328(a) of the Act requires that EPA establish requirements to control air pollution from OCS sources located within 25 miles of states' seaward boundaries that are the same as onshore requirements. To comply with this statutory mandate, EPA must incorporate applicable onshore rules into part 55 as they exist onshore. This limits EPA's flexibility in deciding which requirements will be incorporated into part 55 and prevents EPA from making substantive changes to the requirements it incorporates. As a result, EPA may be incorporating rules into part 55 that do not conform to all of EPA's state implementation plan (SIP) guidance or certain requirements of the Act. Consistency updates may result in the inclusion of state or local rules or regulations into part 55, even though the same rules may ultimately be disapproved for inclusion as part of the SIP. Inclusion in the OCS rule does not imply that a rule meets the requirements of the Act for SIP approval, nor does it imply that the rule will be approved by EPA for inclusion in the SIP.

II. EPA Evaluation and Proposed Action

In updating 40 CFR part 55, EPA reviewed the rules submitted for inclusion in part 55 to ensure that they are rationally related to the attainment or maintenance of federal or state ambient air quality standards or part C of title I of the Act, that they are not designed expressly to prevent exploration and development of the OCS and that they are applicable to OCS sources. 40 CFR 55.1. EPA has also evaluated the rules to ensure they are not arbitrary or capricious. 40 CFR 55.12 (e). In addition, EPA has excluded administrative or procedural rules,[2] and requirements that regulate toxics which are not related to the attainment and maintenance of federal and state ambient air quality standards.

A. After review of the rules submitted by Santa Barbara County APCD against the criteria set forth above and in 40 CFR part 55, EPA is proposing to make the following rule revision applicable to OCS sources for which the Santa Barbara County APCD is designated as the COA: Rule 330 Surface Coating of Metal Parts and Products (Adopted 1/20/00)

B. After review of the rules submitted by Ventura County APCD against the criteria set forth above and in 40 CFR part 55, EPA proposing to make the following new rule applicable to OCS sources for which the Ventura County APCD is designated as the COA: Rule 230 Notice to Comply (Adopted 11/09/99)

III. Administrative Requirements

Under Executive Order 12866 (58 FR 51735, October 4, 1993), this proposed action is not a ''significant regulatory action'' and therefore is not subject to review by the Office of Management and Budget. This proposed action merely approves state law as meeting federal requirements and imposes no additional requirements beyond those imposed by state law. Accordingly, the Administrator certifies that this proposed rule will not have a significant economic impact on a substantial number of small entities under the Regulatory Flexibility Act (5 U.S.C. 601 *et seq.*). Because this rule proposes to approve pre-existing requirements under state law and does not impose any additional enforceable duty beyond that required by state law, it does not contain any unfunded mandate or significantly or uniquely affect small governments, as described in the Unfunded Mandates Reform Act of 1995 (Public Law 104–4). For the same reason, this proposed rule also does not significantly or uniquely affect the communities of tribal governments, as specified by Executive Order 13084 (63 FR 27655, May 10, 1998). This proposed rule will not have substantial direct effects on the States, on the relationship between the national government and the States, or on the distribution of power and responsibilities among the various levels of government, as specified in Executive Order 13132 (64 FR 43255, August 10, 1999), because it merely approves a state rule implementing a federal standard, and does not alter the relationship or the distribution of power and responsibilities established in the Clean Air Act. This proposed rule also is not subject to Executive Order 13045 (62 FR 19885, April 23, 1997), because it is not economically significant.

In reviewing SIP submissions, EPA's role is to approve state choices, provided that they meet the criteria of the Clean Air Act. In this context, in the absence of a prior existing requirement for the State to use voluntary consensus standards (VCS), EPA has no authority to disapprove a SIP submission for failure to use VCS. It would thus be inconsistent with applicable law for EPA, when it reviews a SIP submission, to use VCS in place of a SIP submission that otherwise satisfies the provisions of the Clean Air Act. Thus, the requirements of section 12(d) of the National Technology Transfer and Advancement Act of 1995 (15 U.S.C. 272 note) do not apply. As required by section 3 of Executive Order 12988 (61 FR 4729, February 7, 1996), in issuing this proposed rule, EPA has taken the necessary steps to eliminate drafting errors and ambiguity, minimize potential litigation, and provide a clear legal standard for affected conduct. EPA has complied with Executive Order 12630 (53 FR 8859, March 15, 1988) by examining the takings implications of the rule in accordance with the ''Attorney General's Supplemental Guidelines for the Evaluation of Risk and Avoidance of Unanticipated Takings' issued under the executive order. This proposed rule does not impose an information collection

[1] The reader may refer to the Notice of Proposed Rulemaking, December 5, 1991 (56 FR 63774), and the preamble to the final rule promulgated September 4, 1992 (57 FR 40792) for further background and information on the OCS regulations.

[2] Each COA which has been delegated the authority to implement and enforce part 55, will use its administrative and procedural rules as onshore. However, in those instances where EPA has not delegated authority to implement and enforce part 55, EPA will use its own administrative and procedural requirements to implement the substantive requirements. 40 CFR 55.14 (c)(4).

burden under the provisions of the Paperwork Reduction Act of 1995 (44 U.S.C. 3501 *et seq.*).

List of Subjects in 40 CFR Part 55

Environmental protection, Administrative practice and procedures, Air pollution control, Hydrocarbons, Incorporation by reference, Intergovernmental relations, Nitrogen dioxide, Nitrogen oxides, Outer continental shelf, Ozone, Particulate matter, Permits, Reporting and recordkeeping requirements, Sulfur oxides.

Dated: May 11, 2000.

Laura Yoshii,

Acting Regional Administrator, Region IX.

Title 40 of the Code of Federal Regulations, part 55, is proposed to be amended as follows:

PART 55—[AMENDED]

1. The authority citation for part 55 continues to read as follows:

Authority: Section 328 of the Clean Air Act (42 U.S.C. 7401 *et seq.*) as amended by Public Law 101–549.

2. Section 55.14 is proposed to be amended by revising paragraphs (e)(3)(ii)(F) and (e)(3)(ii)(H) to read as follows:

§ 55.14 Requirements that apply to OCS sources located within 25 miles of States' seaward boundaries, by State.

* * * * *

(e) * * *

(3) * * *

(ii) * * *

(F) *Santa Barbara County Air Pollution Control District Requirements Applicable to OCS Sources.*

* * * * *

(H) *Ventura County Air Pollution Control District Requirements Applicable to OCS Sources.*

* * * * *

3. Appendix A to part 55 is proposed to be amended by revising paragraph (b)(6) and (b)(8) under the heading ''California'' to read as follows:

Appendix A to Part 55 —Listing of State and Local Requirements Incorporated by Reference Into Part 55, by State

* * * * *

California

* * * * *

(b) Local requirements.

* * * * *

(6) The following requirements are contained in *Santa Barbara County Air Pollution Control District Requirements Applicable to OCS Sources:*

Rule 102 Definitions (Adopted 5/20/99)
Rule 103 Severability (Adopted 10/23/78)
Rule 106 Notice to Comply for Minor Violations (Adopted 7/15/99)
Rule 201 Permits Required (Adopted 4/17/97)
Rule 202 Exemptions to Rule 201 (Adopted 4/17/97)
Rule 203 Transfer (Adopted 4/17/97)
Rule 204 Applications (Adopted 4/17/97)
Rule 205 Standards for Granting Applications (Adopted 4/17/97)
Rule 206 Conditional Approval of Authority to Construct or Permit to Operate (Adopted 10/15/91)
Rule 207 Denial of Application (Adopted 10/23/78)
Rule 210 Fees (Adopted 4/17/97)
Rule 212 Emission Statements (Adopted 10/20/92)
Rule 301 Circumvention (Adopted 10/23/78)
Rule 302 Visible Emissions (Adopted 10/23/78)
Rule 304 Particulate Matter-Northern Zone (Adopted 10/23/78)
Rule 305 Particulate Matter Concentration-Southern Zone (Adopted 10/23/78)
Rule 306 Dust and Fumes-Northern Zone (Adopted 10/23/78)
Rule 307 Particulate Matter Emission Weight Rate-Southern Zone (Adopted 10/23/78)
Rule 308 Incinerator Burning (Adopted 10/23/78)
Rule 309 Specific Contaminants (Adopted 10/23/78)
Rule 310 Odorous Organic Sulfides (Adopted 10/23/78)
Rule 311 Sulfur Content of Fuels (Adopted 10/23/78)
Rule 312 Open Fires (Adopted 10/2/90)
Rule 316 Storage and Transfer of Gasoline (Adopted 4/17/97)
Rule 317 Organic Solvents (Adopted 10/23/78)
Rule 318 Vacuum Producing Devices or Systems-Southern Zone (Adopted 10/23/78)
Rule 321 Solvent Cleaning Operations (Adopted 9/18/97)
Rule 322 Metal Surface Coating Thinner and Reducer (Adopted 10/23/78)
Rule 323 Architectural Coatings (Adopted 7/18/96)
Rule 324 Disposal and Evaporation of Solvents (Adopted 10/23/78)
Rule 325 Crude Oil Production and Separation (Adopted 1/25/94)
Rule 326 Storage of Reactive Organic Liquid Compounds (Adopted 12/14/93)
Rule 327 Organic Liquid Cargo Tank Vessel Loading (Adopted 12/16/85)
Rule 328 Continuous Emission Monitoring (Adopted 10/23/78)
Rule 330 Surface Coating of Miscellaneous Metal Parts and Products (Adopted 1/20/00)
Rule 331 Fugitive Emissions Inspection and Maintenance (Adopted 12/10/91)
Rule 332 Petroleum Refinery Vacuum Producing Systems, Wastewater Separators and Process Turnarounds (Adopted 6/11/79)
Rule 333 Control of Emissions from Reciprocating Internal Combustion Engines (Adopted 4/17/97)
Rule 342 Control of Oxides of Nitrogen (NOx) from Boilers, Steam Generators and Process Heaters) (Adopted 4/17/97)
Rule 343 Petroleum Storage Tank Degassing (Adopted 12/14/93)
Rule 344 Petroleum Sumps, Pits, and Well Cellars (Adopted 11/10/94)
Rule 352 Natural Gas-Fired Fan-Type Central Furnaces and Residential Water Heaters (Adopted 9/16/99)
Rule 353 Adhesives and Sealants (Adopted 8/19/99)
Rule 359 Flares and Thermal Oxidizers (6/28/94)
Rule 370 Potential to Emit—Limitations for Part 70 Sources (Adopted 6/15/95)
Rule 505 Breakdown Conditions Sections A.,B.1,. and D. only (Adopted 10/23/78)
Rule 603 Emergency Episode Plans (Adopted 6/15/81)
Rule 702 General Conformity (Adopted 10/20/94)
Rule 801 New Source Review (Adopted 4/17/97)
Rule 802 Nonattainment Review (Adopted 4/17/97)
Rule 803 Prevention of Significant Deterioration (Adopted 4/17/97)
Rule 804 Emission Offsets (Adopted 4/17/97)
Rule 805 Air Quality Impact Analysis and Modeling (Adopted 4/17/97)
Rule 808 New Source Review for Major Sources of Hazardous Air Pollutants (Adopted 5/20/99)
Rule 1301 Part 70 Operating Permits—General Information (Adopted 4/17/97)
Rule 1302 Part 70 Operating Permits—Permit Application (Adopted 11/09/93)
Rule 1303 Part 70 Operating Permits—Permits (Adopted 11/09/93)
Rule 1304 Part 70 Operating Permits—Issuance, Renewal, Modification and Reopening (Adopted 11/09/93)
Rule 1305 Part 70 Operating Permits—Enforcement (Adopted 11/09/93)

* * * * *

(8) The following requirements are contained in *Ventura County Air Pollution Control District Requirements Applicable to OCS Sources:*

Rule 2 Definitions (Adopted 11/10/98)
Rule 5 Effective Date (Adopted 5/23/72)
Rule 6 Severability (Adopted 11/21/78)
Rule 7 Zone Boundaries (Adopted 6/14/77)
Rule 10 Permits Required (Adopted 6/13/95)
Rule 11 Definition for Regulation II (Adopted 6/13/95)
Rule 12 Application for Permits (Adopted 6/13/95)
Rule 13 Action on Applications for an Authority to Construct (Adopted 6/13/95)
Rule 14 Action on Applications for a Permit to Operate (Adopted 6/13/95)
Rule 15.1 Sampling and Testing Facilities (Adopted 10/12/93)
Rule 16 BACT Certification (Adopted 6/13/95)
Rule 19 Posting of Permits (Adopted 5/23/72)
Rule 20 Transfer of Permit (Adopted 5/23/72)
Rule 23 Exemptions from Permits (Adopted 7/9/96)

Rule 24 Source Recordkeeping, Reporting, and Emission Statements (Adopted 9/15/92)
Rule 26 New Source Review (Adopted 10/22/91)
Rule 26.1 New Source Review—Definitions (Adopted 1/13/98)
Rule 26.2 New Source Review—Requirements (Adopted 1/13/98)
Rule 26.6 New Source Review—Calculations (Adopted 1/13/98)
Rule 26.8 New Source Review—Permit To Operate (Adopted 10/22/91)
Rule 26.10 New Source Review—PSD (Adopted 1/13/98)
Rule 28 Revocation of Permits (Adopted 7/18/72)
Rule 29 Conditions on Permits (Adopted 10/22/91)
Rule 30 Permit Renewal (Adopted 5/30/89)
Rule 32 Breakdown Conditions: Emergency Variances, A., B.1., and D. only. (Adopted 2/20/79)
Rule 33 Part 70 Permits—General (Adopted 10/12/93)
Rule 33.1 Part 70 Permits—Definitions (Adopted 10/12/93)
Rule 33.2 Part 70 Permits—Application Contents (Adopted 10/12/93)
Rule 33.3 Part 70 Permits—Permit Content (Adopted 10/12/93)
Rule 33.4 Part 70 Permits—Operational Flexibility (Adopted 10/12/93)
Rule 33.5 Part 70 Permits—Time frames for Applications, Review and Issuance (Adopted 10/12/93)
Rule 33.6 Part 70 Permits—Permit Term and Permit Reissuance (Adopted 10/12/93)
Rule 33.7 Part 70 Permits—Notification (Adopted 10/12/93)
Rule 33.8 Part 70 Permits—Reopening of Permits (Adopted 10/12/93)
Rule 33.9 Part 70 Permits—Compliance Provisions (Adopted 10/12/93)
Rule 33.10 Part 70 Permits—General Part 70 Permits (Adopted 10/12/93)
Rule 34 Acid Deposition Control (Adopted 3/14/95)
Rule 35 Elective Emission Limits (Adopted 11/12/96)
Rule 36 New Source Review—Hazardous Air Pollutants (Adopted 10/6/98)
Rule 42 Permit Fees (Adopted 6/22/99)
Rule 44 Exemption Evaluation Fee (Adopted 9/10/96)
Rule 45 Plan Fees (Adopted 6/19/90)
Rule 47 Source Test, Emission Monitor, and Call-Back Fees (Adopted 6/22/99)
Rule 45.2 Asbestos Removal Fees (Adopted 8/4/92)
Rule 50 Opacity (Adopted 2/20/79)
Rule 52 Particulate Matter-Concentration (Adopted 5/23/72)
Rule 53 Particulate Matter-Process Weight (Adopted 7/18/72)
Rule 54 Sulfur Compounds (Adopted 6/14/94)
Rule 56 Open Fires (Adopted 3/29/94)
Rule 57 Combustion Contaminants-Specific (Adopted 6/14/77)
Rule 60 New Non-Mobile Equipment-Sulfur Dioxide, Nitrogen Oxides, and Particulate Matter (Adopted 7/8/72)
Rule 62.7 Asbestos—Demolition and Renovation (Adopted 6/16/92)
Rule 63 Separation and Combination of Emissions (Adopted 11/21/78)
Rule 64 Sulfur Content of Fuels (Adopted 4/13/99)
Rule 67 Vacuum Producing Devices (Adopted 7/5/83)
Rule 68 Carbon Monoxide (Adopted 6/14/77)
Rule 71 Crude Oil and Reactive Organic Compound Liquids (Adopted 12/13/94)
Rule 71.1 Crude Oil Production and Separation (Adopted 6/16/92)
Rule 71.2 Storage of Reactive Organic Compound Liquids (Adopted 9/26/89)
Rule 71.3 Transfer of Reactive Organic Compound Liquids (Adopted 6/16/92)
Rule 71.4 Petroleum Sumps, Pits, Ponds, and Well Cellars (Adopted 6/8/93)
Rule 71.5 Glycol Dehydrators (Adopted 12/13/94)
Rule 72 New Source Performance Standards (NSPS) (Adopted 9/10/96)
Rule 74 Specific Source Standards (Adopted 7/6/76)
Rule 74.1 Abrasive Blasting (Adopted 11/12/91)
Rule 74.2 Architectural Coatings (Adopted 08/11/92)
Rule 74.6 Surface Cleaning and Degreasing (Adopted 11/10/98)
Rule 74.6.1 Cold Cleaning Operations (Adopted 7/9/96)
Rule 74.6.2 Batch Loaded Vapor Degreasing Operations (Adopted 7/9/96)
Rule 74.7 Fugitive Emissions of Reactive Organic Compounds at Petroleum Refineries and Chemical Plants (Adopted 10/10/95)
Rule 74.8 Refinery Vacuum Producing Systems, Waste-water Separators and Process Turnarounds (Adopted 7/5/83)
Rule 74.9 Stationary Internal Combustion Engines (Adopted 12/21/93)
Rule 74.10 Components at Crude Oil Production Facilities and Natural Gas Production and Processing Facilities (Adopted 3/10/95)
Rule 74.11 Natural Gas-Fired Residential Water Heaters-Control of NO_X (Adopted 4/9/85)
Rule 74.11.1 Large Water Heaters and Small Boilers (Adopted 9/14/99)
Rule 74.12 Surface Coating of Metal Parts and Products (Adopted 9/10/96)
Rule 74.15 Boilers, Steam Generators and Process Heaters (5MM BTUs and greater) (Adopted 11/8/94)
Rule 74.15.1 Boilers, Steam Generators and Process Heaters (1–5MM BTUs)(Adopted 6/13/95)
Rule 74.16 Oil Field Drilling Operations (Adopted 1/8/91)
Rule 74.20 Adhesives and Sealants (Adopted 1/14/97)
Rule 74.23 Stationary Gas Turbines (Adopted 10/10/95)
Rule 74.24 Marine Coating Operations (Adopted 9/10/96)
Rule 74.24.1 Pleasure Craft Coating and Commercial Boatyard Operations (Adopted 11/10/98)
Rule 74.26 Crude Oil Storage Tank Degassing Operations (Adopted 11/8/94)
Rule 74.27 Gasoline and ROC Liquid Storage Tank Degassing Operations (Adopted 11/8/94)
Rule 74.28 Asphalt Roofing Operations (Adopted 5/10/94)
Rule 74.30 Wood Products Coatings (Adopted 9/10/96)
Rule 75 Circumvention (Adopted 11/27/78)
Rule 100 Analytical Methods (Adopted 7/18/72)
Rule 101 Sampling and Testing Facilities (Adopted 5/23/72)
Rule 102 Source Tests (Adopted 11/21/78)
Rule 103 Continuous Monitoring Systems (Adopted 2/9/99)
Rule 154 Stage 1 Episode Actions (Adopted 9/17/91)
Rule 155 Stage 2 Episode Actions (Adopted 9/17/91)
Rule 156 Stage 3 Episode Actions (Adopted 9/17/91)
Rule 158 Source Abatement Plans (Adopted 9/17/91)
Rule 159 Traffic Abatement Procedures (Adopted 9/17/91)
Rule 220 General Conformity (Adopted 5/9/95)
Rule 230 Notice to Comply (Adopted 11/9/99)

* * * * *

[FR Doc. 00–13333 Filed 5–25–00; 8:45 am]
BILLING CODE 6560–50–P

DEPARTMENT OF TRANSPORTATION

Federal Motor Carrier Safety Administration

49 CFR Parts 350, 390, 394, 395, and 398

[Docket No. FMCSA–97–2350]

RIN 2126–AA23

Public Hearing on Hours of Service of Drivers; Change in Format

AGENCY: Federal Motor Carrier Safety Administration (FMCSA), DOT.

ACTION: Notice of change in hearing structure.

SUMMARY: By notice of May 5, 2000 (65 FR 26166), the FMCSA announced the scheduling of a public hearing on May 31 and June 1, 2000, for persons to present comments on the agency's proposed revisions to its hours-of-service regulations (65 FR 25540, May 2, 2000). The announcement said the hearing would be subdivided and the FMCSA would seek comments on specific topics during prescribed time periods.

Because many persons have asked to speak on the general subject, rather than specific areas, it has been determined that all speakers may speak on the general subject of the proposed revisions at any time they are scheduled to testify during the hours of 8:30 a.m. to 5 p.m. each day.

DATES: The hearing will be held on May 31 and June 1, 2000.

ADDRESS: The hearing will be at the DOT Headquarters building, Room 2230, 400 Seventh Street, SW., Washington, DC 20590–0001.

FOR FURTHER INFORMATION CONTACT: *General Information.* To request time to be heard at the Washington hearing and for other general information about the Washington hearing and others scheduled for later throughout the country, contact Mr. Stanley Hamilton, Office of Regulatory Development, (202) 366–0665. *Specific Information.* For information concerning the rulemaking contact Mr. David Miller, Office of Bus and Truck Standards, (202) 366–1790, or Mr. Charles Medalen, Office of the Chief Counsel, Federal Highway Administration, (202) 366–1354. Office hours are from 7:45 a.m. to 4:15 p.m., et, Monday through Friday, except Federal holidays.

Authority: 49 U.S.C. 322, 31502, and 31136; and 49 CFR 1.73.

Issued on: May 22, 2000.

Brian M. McLaughlin,

Director, Office of Policy Plans and Regulations.

[FR Doc. 00–13284 Filed 5–25–00; 8:45 am]

BILLING CODE 4910–22–P

DEPARTMENT OF COMMERCE

National Oceanic and Atmospheric Administration

50 CFR Part 679

[Docket No. 000511130–0130–01; I.D. 032900C]

RIN 0648–AN25

Fisheries of the Exclusive Economic Zone Off Alaska; Allocation of Pacific Cod among Vessels Using Hook-and-Line or Pot Gear in the Bering Sea and Aleutian Islands

AGENCY: National Marine Fisheries Service (NMFS), National Oceanic and Atmospheric Administration (NOAA), Commerce.

ACTION: Proposed Rule; proposed revision to the 2000 harvest specifications for Pacific cod; request for comments.

SUMMARY: NMFS proposes regulations to implement Amendment 64 to the Fishery Management Plan for the Groundfish Fishery of the Bering Sea and Aleutian Islands Area (FMP). This proposed amendment would also necessitate a revision to the 2000 harvest specifications for Pacific cod in the Bering Sea and Aleutian Islands management area (BSAI). Amendment 64, submitted by the North Pacific Fishery Management Council (Council), would apportion the hook-and-line or pot gear (fixed gear) allocation of total allowable catch (TAC) of Pacific cod in the BSAI among hook-and-line catcher-processor vessels, hook-and-line catcher vessels, and pot gear vessels. This action is necessary to respond to socio-economic needs of the fishing industry that have been identified by the Council and is intended to promote the goals and objectives of the FMP.

DATES: Comments must be received by July 10, 2000.

ADDRESSES: Comments must be sent to Sue Salveson, Assistant Regional Administrator for Sustainable Fisheries, Alaska Region, NMFS, P.O. Box 21668, Juneau, AK 99802, Attn: Lori Gravel. Hand or courier delivered comments may be sent to the Federal Building, 709 West 9th Street, Room 453, Juneau, AK 99801. Comments also may be sent via facsimile (fax) to 907–586–7465. Comments will not be accepted if submitted via e-mail or the Internet. Copies of Amendment 64 and the Environmental Assessment/Regulatory Impact Review/Initial Regulatory Flexibility Analysis (EA/RIR/IRFA) prepared for the amendments are available from the North Pacific Fishery Management Council at 605 West 4th Ave. Suite 306, Anchorage, AK 99501, telephone 907–271–2809.

FOR FURTHER INFORMATION CONTACT: James Hale, 907–586–7228.

SUPPLEMENTARY INFORMATION: NMFS manages the groundfish fisheries in the Exclusive Economic Zone (3 to 200 miles offshore) of the BSAI under the FMP, which the Council prepared and NMFS approved in 1982 under the Magnuson-Stevens Fishery Conservation and Management Act, P. L. 94–265, 16 U.S.C. 1801 (Magnuson-Stevens Act).

The Council has submitted Amendment 64 for Secretarial review. NMFS published a Notice of Availability (NOA) of the FMP amendment in the **Federal Register** on April 11, 2000 (65 FR 19354), with comments on the FMP amendment invited through June 12, 2000. Written comments may address the FMP amendment, the proposed rule, or both, but must be received by June 20, 2000 to be considered in the decision to approve or disapprove the FMP amendment.

Background and Need for Action

Beginning in 1997, Amendment 46 to the FMP allocated the TAC for BSAI Pacific cod among vessels using jig gear, trawl gear, and hook-and-line or pot gear. Two percent of the TAC is reserved for jig gear, 51 percent for hook-and-line or pot gear, and 47 percent for trawl gear. The amendment further split the trawl allocation equally between catcher vessels and catcher/processor vessels, but no split was adopted for the 51 percent allocated to hook-and-line or pot vessels.

Since the approval of Amendment 46, increasing competition for Pacific cod among catcher/processor and catcher vessels using pot or hook-and-line gear has given rise to new allocation issues. Increased prices for Pacific cod, reduced crab guideline harvest levels, and shortened or canceled crab seasons due to low resource abundance have resulted in increased harvests of Pacific cod by vessels using pot gear. Fishermen displaced from crab fisheries have expressed ongoing interest in fishing for Pacific cod aggravating the concerns of long-term Pacific cod fishermen about erosion of their gear harvest shares in the cod fishery in favor of new entrants using pot gear who, until very recently, focused harvest activity in the BSAI crab fisheries.

In response to these concerns, the Council initiated an analysis at its April 1999 meeting of the effects of splitting the hook-and-line or pot gear allocation of Pacific cod in the BSAI among hook-and-line catcher/processor vessels, hook-and-line catcher vessels, and all vessels using pot gear. At its June 1999 meeting, the Council reviewed the analysis and drafted the following problem statement to guide further analysis of alternatives for Amendment 64:

> The hook-and-line and pot fisheries for Pacific cod in the Bering Sea/Aleutian Islands are fully utilized. Competition for this resource has increased for a variety of reasons, including increased market value of cod products and a declining [acceptable biological catch and total allowable catch.] Longline and pot fishermen who have made significant long-term investments, have long catch histories, and are significantly dependent on the BSAI cod fisheries need protection from others who have little or limited history and wish to increase their participation in the fishery. This requires prompt action to promote stability in the BSAI fixed gear cod fishery until comprehensive rationalization is completed.

The subsequent analysis reviewed, in addition to the status quo, alternatives for separate Pacific cod allocations for the different hook-and-line and pot gear users that approximate their historical catches over the past 4 years. The options analyzed determined those percentages based on catch histories from (1) 1996 and 1997, (2) 1997 and 1998, (3) 1996 through 1998, and (4) 1995 through 1998. In general, the

allocations that would result from these options ranged between 80 and 85 percent to hook-and-line vessels and between 15 and 20 percent to pot vessels.

At its October 1999 meeting, the Council adopted Amendment 64 to set Pacific cod directed fishing allowances for the different hook-and-line and pot gear users (sectors) in the following percentages: Hook-and-line catcher/processor vessels, 80 percent; hook-and-line catcher vessels, 0.3 percent; pot gear vessels, 18.3 percent; and hook-and-line or pot catcher vessels less than 60 feet length overall (LOA), 1.4 percent. These percentages represent divisions of the hook-and-line or pot gear TAC after a deduction of estimated incidental catch of Pacific cod in other groundfish hook-and-line or pot gear fisheries.

The proposed amendment also provides that harvests by pot and hook-and-line catcher vessels less than 60 feet LOA would accrue against the 1.4 percent allocation only after pot vessels and hook-and-line catcher vessels harvest the respective 18.3 percent and 0.3 percent allocations. Managing the allocations in this manner would ensure that cod is available to the smaller catcher vessels even after the larger vessels in their gear sector have taken their allocation. Nevertheless, if the pot gear fishery lasts longer than the hook-and-line fishery, then the small hook-and-line catcher vessels could begin (and possibly finish) harvesting the 1.4 percent allocation before catcher vessels under 60 feet using pot gear have an opportunity to harvest any of the 1.4 percent set aside for smaller catcher vessels.

Because a sector of the BSAI Pacific cod fishery may not be able to harvest its entire allocation in a year due to halibut bycatch constraints or, in the case of the jig fishery, insufficient effort in the fishery, the Council also provided direction on how projected unharvested amounts of a gear's directed fishing allowance may be transferred to a different user group. Unharvested amounts (roll-overs) from the jig or trawl gear allocations would be apportioned between catcher-processors using hook-and-line gear and vessels equal to or greater than 60 ft LOA using pot gear according to the actual harvest of roll-overs by these two sectors during the 3-year period from 1996–98. Projections based on information in the analysis for this proposed action indicate that 94.7 percent of the cod would be allocated to the hook-and-line catcher-processor fleet and the remaining 5.3 percent to the pot fleet. In addition, any amounts of Pacific cod annually allocated to catcher vessels using hook-and-line gear or to vessels less than 60 ft (18.3 meters(m)) LOA that are projected to remain unharvested would be rolled over to the hook-and-line catcher-processor fleet in September.

The Council recommended that the Pacific cod directed fishing allowances proposed under Amendment 64 for the different hook-and-line and pot gear sectors would terminate on December 31, 2003. On that date, Pacific cod allocation would revert to the current regime unless the Council adopts and NMFS approves a new FMP amendment to continue the proposed allocations of Pacific cod or implement new allocation percentages after that date. In adopting an expiration date for the proposed amendment, the Council reasoned that 3 years would be sufficient time to evaluate the impact of this action in light of other impending changes for the BSAI fixed gear fishery, such as, proposed Amendment 67 to require Pacific cod and gear endorsements on permits issued under the License Limitation Program (LLP). Whereas this proposed action would establish allocations for different sectors of the fixed gear cod fishery, proposed Amendment 67 would limit the participants to those who meet certain historical criteria.

In adopting Amendment 64, the Council recognized that a separate regulatory amendment would be needed to apportion the 900 mt Pacific halibut prohibited species mortality limit established for nontrawl gear in regulations at § 679.21(e)(2) among catcher vessels and catcher/processor vessels fishing for Pacific cod using hook-and-line gear. Current regulations only authorize a separate Pacific halibut bycatch allowance to the ''Pacific cod hook-and-line fishery'' defined at § 679.21(e)(4)(ii)(A). Thus, catcher/processor vessels using hook-and-line gear to fish for Pacific cod could attain amounts of halibut bycatch mortality that would result in prohibition of directed fishing for Pacific cod by all vessels using hook-and-line gear, including catcher vessels using this gear type under a separate Pacific cod directed fishing allowance.

To respond to this concern, the Council has requested staff to develop an analysis of regulatory measures that would authorize further allocation of the Pacific halibut mortality limits among vessels using hook-and-line or pot gear. If adopted by the Council in the future, this regulatory amendment would be published as a separate proposed rule for public review and comment.

Incidental Catch Allowance

Pacific cod also are taken incidentally in directed fisheries using hook-and-line or pot gear for other species. To the extent practicable, NMFS credits this incidental harvest against the TAC to ensure that Pacific cod are not overharvested. The proposed rule to implement Amendment 64 would require the Administrator, Alaska Region, NMFS, (Regional Administrator), to annually establish an incidental catch allowance for Pacific cod taken in other directed hook-and-line and pot fisheries for groundfish. The incidental catch allowance would be deducted from the overall hook-and-line or pot gear allocation of the Pacific cod TAC before that allocation is divided among the different hook-and-line and pot gear user groups.

NMFS acknowledges that incidental catch of Pacific cod occurs in non-groundfish fisheries such as the hook-and-line gear fishery for Pacific halibut or crab pot gear fisheries. Sufficient data currently are not collected from these fisheries that would allow NMFS to extrapolate useful estimates of incidental catch for purposes of specifying the annual ICA and deducting these amounts from the Pacific cod TAC allocated to vessels using hook-and-line or pot gear as directed fishing allowances. The total incidental catch amount of Pacific cod in the crab and Pacific halibut fisheries likely exceeds several thousand metric tons (mt) based on (1) anecdotal information on the amount of incidentally caught Pacific cod used as bait in the crab fisheries, (2) the fact that the Pacific halibut fishery during summer months typically occurs in relatively shallow water where Pacific cod are prevalent, and (3) assumptions on amount of gear deployed and incidental catch rates. In the absence of the quantitative data needed to estimate incidental Pacific cod harvests in the halibut and crab fisheries, NMFS intends to estimate the ICA only on the basis of incidental catch estimated for the non-Pacific cod hook-and-line or pot gear groundfish fisheries.

NMFS recognizes the potential biological significance of not accounting for all incidental catch of Pacific cod in non-trawl fisheries and intends to explore with the State of Alaska and the International Pacific Halibut Commission options to collect better information on incidental catch rates of non-target species in the crab and Pacific halibut fisheries. NMFS further anticipates that improved estimates of incidental catch amounts in these fisheries will be available to the Council

when it reassesses BSAI Pacific cod allocation issues prior to the proposed expiration date of Amendment 64. Until then, NMFS' stock assessment scientists believe that, while the amounts of Pacific cod taken in the crab and Pacific halibut fisheries could exceed several thousand mt, this level of mortality does not pose significant concerns for overfishing or sustainable resource management of the Pacific cod resource given the conservative management of this species under the FMP. That being said, NMFS firmly believes that steps must be taken to collect the data necessary to obtain better estimates of overall mortality of Pacific cod in the non-groundfish fisheries.

Subsequent to the Council's October 1999 adoption of proposed Amendment 64, several owners of catcher/processor vessels using pot gear to participate in a directed fishery for Pacific cod petitioned the Council to initiate a separate FMP amendment that would authorize separate Pacific cod directed fishing allowances for catcher/processor vessels using pot gear and catcher vessels using pot gear. This petition was based on the assumptions that increased fishing effort for Pacific cod with pot gear is due primarily to catcher vessels using pot gear and that the historical harvest share of cod by catcher/processor vessels using pot gear is threatened. In response to these concerns, the Council requested staff to develop a separate FMP amendment that would authorize a further allocation of Pacific cod between these two sectors. If adopted by the Council in the future, the proposed amendment and its implementing rule would be published in the **Federal Register** for public review and comment.

In December 1999, the Council recommended seasonal allowances for the 51 percent of the Pacific cod TAC allocated to the hook-and-line or pot gear fisheries. The seasonal allowances are authorized under § 679.20(a)(7)(iv) and are based on the criteria set forth at § 679.20(a)(7)(iv)(B). The final 2000 harvest specifications for BSAI groundfish were approved by NMFS and published in the **Federal Register** on February 18, 2000 (65 FR 8282).

If approved by NMFS, the final rule implementing Amendment 64 would revise the final 2000 harvest specifications in concert with the hook-and-line and pot gear allocations proposed under the amendment. The final 2000 harvest specifications set the hook-and-line or pot gear allocation of the 2000 Pacific cod TAC at 91,048 mt. An incidental catch allowance of 500 mt, derived from estimates of incidental catch of Pacific cod in other groundfish fisheries from 1996–1999, would be deducted from the hook-and-line or pot gear allocation of the Pacific cod TAC before the allocation is apportioned to the separate gear sectors. Table 1 lists the proposed revisions to the 2000 allocations and seasonal apportionments of the Pacific cod TAC.

Consistent with § 679.20(a)(7)(iv)(C), any portion of the first seasonal allowance of the catcher/processor hook-and-line gear allocation that is not harvested by the end of the first season would become available on September 1, the beginning of the third season. No seasonal apportionment of the amounts of Pacific cod allocated to catcher vessels or to vessels using pot gear is proposed for 2000.

TABLE 1.—GEAR SHARES AND SEASONAL APPORTIONMENTS OF THE BSAI PACIFIC COD HOOK-AND-LINE AND POT GEAR ALLOCATION

Gear sector	Percent	Share (mt)	Seasonal appointment [1]	
			Date	Amount (mt)
Hook-and-line Catcher-processors	80	72,438	Jan 1–Apr 30	52,000
			May 1–Aug 31	
			Sept 1–Dec 31	20,438
Hook-and-Line Catcher Vessels	0.3	272	Jan 1–Dec 31	
Pot Gear Vessels	18.3	16,570	Jan 1–Dec 31	16,570
			272.	
Catcher Vessels under 60 feet LOA using Hook-and-line or Pot Gear	1.4	1,268	Jan 1–Dec 31	1,268
Sub-total	100	90,548		90,548
Incidental Catch Allowance		500		500
Total hook-and-line and pot gear allocation of Pacific cod TAC		91,048		91,048

[1] Any unused portion of the first seasonal Pacific cod allowance specified for catcher/processors using hook-and-line fishery will be reapportioned to the third seasonal allowance.

Implementation

In the event that NMFS approves this action and implements it mid-season during the 2000 fishing year, any overage of a sector's annual allocation of Pacific cod would be deducted proportionately from the other sectors' allocation remaining for the year.

Classification

At this time, NMFS has not determined that the FMP amendment this rule would implement is consistent with the national standards of the Magnuson-Stevens Act and other applicable laws. NMFS, in making that determination, will take into account the data, views, and comments received during the comment period.

The Council prepared an EA for this FMP amendment that discusses the impact on the environment as a result of this rule. A copy of this EA is available from the Council (see **ADDRESSES**).

The Initial Regulatory Flexibility Analysis (IRFA) prepared for this action indicates that the proposed amendment could negatively affect a number of small entities. For purposes of the Regulatory Flexibility Act (RFA), all catcher vessels fishing for Pacific cod using hook-and-line or pot gear can be considered small businesses, with annual receipts of less than $3 million. Under the current LLP, approximately 330 catcher vessels would be authorized to participate in the Bering Sea Pacific cod hook-and-line or pot gear fishery. Of the 98 catcher-processor vessels potentially authorized under the LLP to fish for Pacific cod, approximately one-third could be considered small entities.

Five of the ten shore-based plants and floating processors operating within Alaskan state waters and processing most of the Pacific cod harvested by hook-and-line or pot gear catcher vessels would be considered small businesses under RFA, processing less than 2 percent of the total shoreside landings of Pacific cod by catcher vessels in 1998. Other small entities affected by the proposed amendment include the three Alaskan communities that are home to processing plants that process limited amounts of BSAI Pacific cod: King Cove, Egegik, and Kenai.

The proposed amendment would allocate a portion of the Pacific cod resource away from the longline catcher-processor fleet and move it to the catcher vessels delivering to shore-based processors. Because the longline catcher-processor fleet comprises the highest number of large entities of any sector fishing off Alaska, this allocation would tend to favor small entities. By implementing the allocations by gear sector without limiting the number of vessels in any gear sector that may enter the fishery, this action may have the effect of increasing competition among users. However, the Council at its April 2000 meeting took final action to mitigate the effect of this action on competition within gear sectors by recommending for approval by NMFS a proposed amendment to require gear and species endorsements on licenses of those who wish to participate in the fixed gear BSAI Pacific cod fishery.

The magnitude of the proposed amendment's impact cannot be conclusively determined with the data currently available. Most persons operating in the fishery affected by the proposed action are small entities given their expected annual gross revenues of less than $3 million, and revenues could potentially be decreased by more than 5 percent, but that depends on the level of catch that might have been achieved in the absence of an allocation. Also, impacts of this action on potential revenues cannot be isolated from other factors including price fluctuation, amount of effort exerted by latent permits, and stock fluctuation of alternative fisheries such as crab.

This action would not limit the number of vessels moving into the Pacific cod fishery from the crab fishery because of downward trends in the Bering Sea crab stocks, and any increase in participation of crab vessels in the Pacific cod pot gear fishery would increase competition for the 18.3 percent of the fixed gear Pacific cod TAC allocated to pot gear vessels and the 1.4 percent allocated to vessels under 60 ft LOA. As noted here, the Council intends to mitigate this impact with proposed Amendment 67, which would require gear and species endorsements based on historical participation in the fishery.

Nothing in this proposed action would result in any changes in reporting or recordkeeping requirements, or any obvious disproportionment regulatory impacts to small entities relative to large. From one perspective, setting a percentage allocation will keep one sector from increasing its share relative to what it could do under the status quo. From the information in the analysis, and from public testimony before the Council, it appears likely that the pot sector would increase its relative share in the absence of a quota split. From another perspective, adoption of the Council's preferred alternative would serve to increase the current share of the smallest entities. In deliberations on this action, the Council considered alternative allocation options, based on historical percentages of catch by the different gear sectors, that would have had varying degrees of impact on small entities in the fixed gear Pacific cod fishery. For longline catcher processors, the annual average harvests ranged from 80 percent of the fixed gear Pacific cod TAC for the years 1996–97 to 86.5 percent for the years 1997–98. For this gear sector the Council chose the lower end of the range, thus leaving a larger percentage of the TAC remaining for longline catcher vessels, pot vessels, and both longline and pot vessels under 60 ft LOA. The allocation options reviewed for longline catcher vessels ranged from 0 percent in the years 1996–97 to 0.25 percent for the years 1995–98. The Council chose a slightly higher percentage (3.0 percent) than the highest average reviewed in the options. For pot vessels, the options ranged from an average harvest of 13.5 percent for the years 1997–98 to 21 percent for 1996–97. While the higher average would have had less impact on small entities in the pot sector, the Council chose to set the pot allocation at 18.3 percent and provided for small entities that are pot or longline vessels under 60 ft LOA by setting aside for those vessels an allocation that represents a larger percentage of the TAC than vessels under 60 ft LOA have historically harvested.

This analysis did not reveal any existing Federal rules that duplicate, overlap, or conflict with any to the actions proposed in the alternatives.

This proposed rule has been determined to be not significant for the purposes of E.O. 12866.

The President has directed Federal agencies to use plain language in their communications with the public, including regulations. To comply with that directive, we seek public comment on any ambiguity or unnecessary complexity arising from the language used in this rule.

List of Subjects in 50 CFR Part 679

Alaska, Fisheries, Recordkeeping and reporting requirements.

Dated: May 19, 2000.

Penelope D. Dalton,

Assistant Administrator for Fisheries, National Marine Fisheries Service.

For the reasons set out in the preamble, 50 CFR part 679 is proposed to be amended as follows:

PART 679—FISHERIES OF THE EXCLUSIVE ECONOMIC ZONE OFF ALASKA

1. The authority citation for 50 CFR part 679 continues to read as follows:

Authority: 16 U.S.C. 773 *et seq*, 1801 *et seq*., and 3631 *et seq*.

2. In § 679.20, paragraph (a)(7)(i)(C) is redesignated as paragraph (a)(7)(i)(D), paragraph (a)(7)(ii)(B) is redesignated as paragraph (a)(7)(ii)(C), redesignated paragraphs (a)(7)(i)(D) and (a)(7)(ii)(C) and paragraphs (a)(7)(iv)(A), (a)(7)(iv)(C) and (b)(1)(v) are revised, paragraph (a)(7)(iii) is removed, and new paragraphs (a)(7)(i)(C) and (a)(7)(ii)(B) are added to read as follows:

§ 679.20 General limitations.

* * * * *

(a) * * *

(7) * * *

(i) * * *

(C) *Allocations among vessels using hook-and-line or pot gear (Applicable through December 31, 2003).* (*1*) The Regional Administrator annually will estimate the amount of Pacific cod taken as incidental catch in directed fisheries for groundfish other than Pacific cod by vessels using hook-and-line or pot gear and deduct that amount from the portion of Pacific cod TAC annually allocated to hook-and-line or pot gear under paragraph (a)(7)(i)(A) of this section. The remainder will be further allocated as directed fishing allowances as follows:

(*i*) 80 percent to catcher/processor vessels using hook-and-line gear;

(*ii*) 0.3 percent to catcher vessels using hook-and-line gear;

(*iii*) 18.3 percent to vessels using pot gear; and

(*iv*) 1.4 percent to catcher vessels less than 60 feet LOA that use either hook-and-line or pot gear.

(*2*) Harvests of Pacific cod made by catcher vessels less than 60 feet (18.3 m)

LOA using pot gear will not accrue to the 1.4 percent allocation under paragraph (a)(7)(i)(C)(*1*)(*iv*) of this section until vessels using pot gear have harvested the 18.3 percent allocated to all vessels using pot gear under paragraph (a)(7)(i)(C)(*1*)(*iii*) of this section.

(*3*) Harvests of Pacific cod made by catcher vessels less than 60 feet (18.3 m) LOA using hook-and-line gear will not accrue to the 1.4 percent allocation under paragraph (a)(7)(i)(C)(*1*)(*iv*) of this section until catcher vessels using hook-and-line gear have harvested the 0.3 percent allocated to all catcher vessels using hook-and-line gear under paragraph (a)(7)(i)(C)(*1*)(*ii*) of this section.

(D) The Regional Administrator may establish separate directed fishing allowances and prohibitions authorized under paragraph (d) of this section for vessels harvesting Pacific cod using trawl gear, jig gear, hook-and-line gear, or pot gear.

(ii) * * *

(A) * * *

(B) *Reallocation among vessels using hook-and-line or pot gear.* If, during a fishing year, the Regional Administrator determines that catcher vessels using hook-and-line gear or vessels less than 60 ft (18.3 m) LOA using hook-and-line or pot gear will not be able to harvest the directed fishing allowance of Pacific cod allocated to those vessels under paragraphs (a)(7)(i)(C)(*1*)(*ii*) or (a)(7)(i)(C)(*1*)(*iv*) of this section, NMFS may reallocate the projected unused amount of Pacific cod as a directed fishing allowance to catcher/processor vessels using hook-and-line gear through notification in the **Federal Register**.

(C) *Reallocation between vessels using trawl or non-trawl gear.* If, during a fishing year, the Regional Administrator determines that vessels using trawl gear, hook-and-line gear, pot gear or jig gear will not be able to harvest the entire amount of Pacific cod in the BSAI allocated to those vessels under paragraphs (a)(7)(i)(A), (a)(7)(i)(B) or (a)(7)(i)(C) of this section, NMFS may reallocate the projected unused amount of Pacific cod to vessels harvesting Pacific cod using the other gear type(s) through notification in the **Federal Register**, except as provided below:

(*1*) *Reallocation of TAC specified for jig gear.* On September 15 of each year, the Regional Administrator will reallocate any projected unused amount of Pacific cod in the BSAI allocated to vessels using jig gear only to vessels using hook-and-line or pot gear through notification in the **Federal Register**.

(*2*) *Reallocation of TAC to catcher/processor vessels using hook-and-line gear or vessels using pot gear.* Any unharvested amounts of Pacific cod TAC that are reallocated from vessels using trawl or jig gear to catcher/processor vessels using hook-and-line gear or vessels using pot gear to increase directed allowances established under paragraphs (a)(7)(i)(C)(*1*)(*i*) or (a)(7)(i)(C)(*1*) (*iii*) of this section, will be apportioned so that catcher/processor vessels using hook-and-line gear will receive 95 percent and vessels using pot gear will receive 5 percent of any such reallocation.

(iv) * * *

(A) *Time periods.* NMFS, after consultation with the Council, may divide the directed fishing allowances allocated to vessels using hook-and-line or pot gear under paragraph (a)(7)(i)(C) of this section among the following three periods: January 1 through April 30, May 1 through August 31, and September 1 through December 31.

(B)* * *

(C) *Unused seasonal allowances.* Any unused portion of a seasonal allowance of Pacific cod allocated to vessels using hook-and-line or pot gear under paragraph (a)(7)(i)(C) will be reallocated to the remaining seasons during the current fishing year in a manner determined by NMFS, after consultation with the Council.

* * * * *

(b) * * *

(1) * * *

(v) *Pacific cod* Any amounts of the BSAI nonspecific reserve that are apportioned to Pacific cod as provided by paragraph (b)(1)(ii) of this section must be apportioned among vessels using jig, hook-and-line or pot, and trawl gear in the same proportion specified in paragraph (a)(7)(i) of this section, unless the Regional Administrator determines under paragraph (a)(7)(ii) of this section that vessels using a certain gear type will not be able to harvest the additional amount of Pacific cod. In this case, the nonspecific reserve will be apportioned to vessels using the other gear type(s).

* * * * *

[FR Doc. 00–13188 Filed 5–25–00; 8:45 am]

BILLING CODE 3510–22–P

Notices

Federal Register

Vol. 65, No. 103

Friday, May 26, 2000

This section of the FEDERAL REGISTER contains documents other than rules or proposed rules that are applicable to the public. Notices of hearings and investigations, committee meetings, agency decisions and rulings, delegations of authority, filing of petitions and applications and agency statements of organization and functions are examples of documents appearing in this section.

DEPARTMENT OF AGRICULTURE

Submission for OMB Review; Comment Request

May 22, 2000.

The Department of Agriculture has submitted the following information collection requirement(s) to OMB for review and clearance under the Paperwork Reduction Act of 1995, Public Law 104–13. Comments regarding (a) whether the collection of information is necessary for the proper performance of the functions of the agency, including whether the information will have partical utility; (b) the accuracy of the agency's estimate of burden including the validity of the methodology and assumptions used; (c) ways to enhance the quality, utility and clarity of the information to be collected; (d) ways to minimize the burden of the collection of infomration on those who are to respond, including through the use of appropriate automated, electronic, mechanical, or other technological collection techniques or other forms of information technology should be addressed to: Desk Officer for Agriculture, Office of Information and Regulatory Affairs, Office of Management and Budget (OMB), Washington, D.C. 20503 and to Departmental Clearance Office, USDA, OCIO, Mail Stop 7602, Washington, D.C. 20250-7602. Comments regarding these information collections are best assured of having their full effect if received within 30 days of this notification. Copies of the submission(s) may be obtained by calling (202) 720–6746.

An agency may not conduct or sponsor a collection of information unless the collection of information displays a currently valid OMB control number and the agency informs potential persons who are to respond to the collection of information that such persons are not required to respond to the collection of information unless it displays a currently valid OMB control number.

Farm Service Agency

Title: 7 CFR 1910–A Receiving and Processing Applications.

OMB Control Number: 0560–0178.

Summary of Collection: Section 302 (7 U.S.C. 1922) of the Consolidated Farm and Rural Development Act (CONACT) provides that ''the Secretary is authorized to make and insure loans under this title to farmers and ranchers * * *'' Section 339 (7 U.S.C. 1989) of the CONACT further provides ''the Secretary is authorized to make such rules and regulations, prescribe the terms and conditions for making and insuring loans, security instruments and agreements, except as otherwise specified herein, and make such delegations of authority as he deems necessary to carry out this title.'' The Farm Service Agency (FSA) has issued regulations through the Federal Register process to implement the making and servicing of direct loans in chapter 18 of the Code of Federal Regulations. These regulations establish the information collections necessary for FSA to make and service direct loans. These loans include Operating, Farm Ownership, Soil and Water, Softwood Timber Production, Emergency, Economic Emergency, Economic Opportunity, Recreation, and Rural Housing loans for Farm Service Buildings. FSA will collect information using loan applications.

Need and Use of the Information: FSA will collect information to determine eligibility and financial feasibility on respondent's requests for loans. The information is required to insure that FSA provides assistance to applicants who have reasonable prospects of repaying the government and meet statutory eligibility requirements.

Description of Respondents: Farm; individuals or households; business or other-for-profit; Federal Government.

Number of Respondents: 34,970.

Frequency of Responses: Reporting: Other (Eligibility).

Total Burden Hours: 119,412.

Forest Service

Title: Application for Permit Non-Federal Commercial Use of Roads by Order.

OMB Control Number: 0596–0016.

Summary of Collection The forest Service (FS) transporation system includes approximately 380,000 miles of roads. These roads are grouped into five maintenance levels. Level one includes roads, which are closed and maintained only to protect the environment. Level of maintenance increase to level five, which is maintained for safe passenger car use. The roads usually provide the only access to commercial products including timber and minerals found on both Federal and private lands within and adjacent to National Forests. Annual maintenance not performed becomes a backlog that creates a financial burden for the FS. To remedy the backlog and pay for needed maintenance the FS requires commercial users to apply and pay for a permit to use the FS Road System. Maintenance resulting from commercial use is accomplished through collection of funds or requiring the commercial users to perform the maintenance. The vehicle for this is the Road Use Permit. The authority for the Road Use Permit process comes from 36 CFR 212.5, 36 CFR 212.9 and 36 CFR 261.54 Section 212.9 authorizes the FS to develop a road system with private in holders that is mutually beneficial to both parties. FS will collect information using form FS 7700–40.

Need and Use of the Information: FS will collect the name; address; and telephone number; description of mileage of roads; purpose of use; use schedule; and plans for future use. The information is used by the FS to identify the road maintenance that is the direct result of the applican't traffic, to calculate any applicable collections for recovery of past Federal investments in roads. Without the Road Use Permit the backlog of maintenance would increase and the FS would have great difficulty providing the transportation system necessary to meet our mission.

Description of Respondents: Business or other for-profit; individuals or households; State, Local or Tribal Government; not-for-profit institutions.

Number of Respondents: 2000.

Frequency of Responses: Reporting: On occasion.

Total Burden Hours 500.

Farm Service Agency

Title: Lamb Meat Adjustment Assistance Program (LMAAP).

OMB Control Number: 0560–NEW.

Summary of Collection: The Lamb Meat Adjustment Assistance Program (LMAAP) is administered and implemented under the general

direction of and supervision of the Farm Service Agency (FSA) through its State and County Committees. The LMAAP is authorized by the Act of August 24, 1935, clause (3) of section 32, and are implemented by regulations at 7 CFR Part 748, which provide for the reestablishment of farmers' purchasing power by making payments in connection with the normal production of any agricultural commodity for domestic consumption. Recently the surge of low-priced, imported lamb-meat causes the threat of injury to U.S. producers in the sheep and lamb industry. The objective of the program is to make direct payments to producers of sheep and lamb operations to help them weather the current economic crisis, as well as, help improve their production efficiencies and the marketability of lamb meat during the 3 year period from July 21, 1999, through July 31, 2002. FSA will collect information using forms FSA–382 and 383.

Need and Use of the Information: FSA will collect the following information: (1) Sheep and lamb operation name; (2) each related producer's name; (3) ID number and shares; (4) the number of rams purchased for the intended purpose of breeding; (5) the number of eligible sheep enrolled in and eligible sheep improvement program; and/or (6) the type and cost of the facility improvement. The information is needed to verify commodity and producer eligibility and calculate payment amounts. Without the information from the producers, FSA would be unable to administer the program to provide direct payments to the sheep and lamb operations.

Description of Respondents: Farm; Individuals or households; Business or other-for-profit.

Number of Respondents: 60,000.

Frequency of Responses: Reporting: Annually.

Total Burden Hours: 25,000.

Agency is requesting and emergency approval by May 20, 2000.

William McAndrew,

Departmental Clearance Officer.

[FR Doc. 00–13236 Filed 5–25–00; 8:45 am]

BILLING CODE 3410–01–M

DEPARTMENT OF AGRICULTURE

Agricultural Marketing Service

[TB–00–09]

Flue-Cured Tobacco Advisory Committee—Notice of Committee Renewal

AGENCY: Agricultural Marketing Service, USDA.

ACTION: Notice of committee renewal.

SUMMARY: Notice is hereby given that the Secretary of Agriculture has renewed the Flue-Cured Tobacco Advisory Committee for an additional period of 2 years.

FOR FURTHER INFORMATION CONTACT: John P. Duncan III, Deputy Administrator, Tobacco Programs, AMS, USDA, 300 12th Street, S.W., Stop 0280, Room 502 Annex Building, P.O. Box 96456, Washington, D.C. 20090–6456, (202) 205–0567.

SUPPLEMENTARY INFORMATION: The Committee, which reports to the Secretary through the Under Secretary for Marketing and Regulatory Programs, recommends opening dates and selling schedules for the flue-cured marketing area which aid the Secretary in making an equitable apportionment and assignment of tobacco inspectors. The Committee consists of 39 members; 21 producer representatives, 10 warehouse representatives, and 8 buyer representatives, representing all segments of the flue-cured tobacco industry and meets at the call of the Secretary. The Secretary has determined that renewal of this Committee is in the public interest.

To ensure that recommendations of the Committee take into account the needs of diverse groups served by the Department, membership should include, to the extent practicable, persons with demonstrated ability to represent minorities, women, and persons with disabilities.

This notice is given in compliance with the Federal Advisory Committee Act (5 U.S.C. App.).

Dated: May 22, 2000.

Paul W. Fiddick,

Assistant Secretary for Administration.

[FR Doc. 00–13239 Filed 5–25–00; 8:45 am]

BILLING CODE 3410–02–P

DEPARTMENT OF AGRICULTURE

Forest Service

Plantation Lakes Project; Ottawa National Forest, Houghton County, Michigan

AGENCY: Forest Service, USDA.

ACTION: Notice of intent to prepare an environmental impact statement.

SUMMARY: The USDA-Forest Service will prepare an Environmental Impact Statement (EIS) for the Plantation Lakes Project to disclose the effects of timber harvest, site preparation for natural and artificial regeneration, planting, road management including: road construction, reconstruction, temporary road construction, obliteration, and motorized vehicle closure; dispersed parking area installation and improvement, trail construction, maintenance of permanent openings for wildlife habitat, and classification of old growth, in the Frost Opportunity Area on the Ontonagon Ranger District, and the Connors, Kenton, Plantation Lakes, and Richard Lake Opportunity Areas on the Kenton Ranger District, located approximately 7 air miles northeast of Kenton, Michigan. The purpose and need for action is to: (1) Promote and maintain processes which would enhance natural species diversity, manage to reduce insect and disease potential below epidemic levels, and decrease fire hazard in the long term while providing a supply of wood products for regional and local needs to help support a stable economic base within the dependent geographical area. (2) Maintain and enhance habitat capable of sustaining long-term populations of a variety of wildlife species. (3) Maintain a road system that allows for management of National Forest lands and provides for public access while meeting other resource needs, and (4) Provide dispersed recreation opportunities to meet public needs.

The DEIS is expected to be filed with the EPA and available for public review by September, 2000.

DATES: Written comments and suggestions should be received on or before June 26, 2000.

ADDRESSES: Written comments and suggestions concerning the scope of the analysis should be sent to Leanne Marten, District Ranger, Ontonagon District, 1209 Rockland Road, Ontonagon, MI 49953.

FOR FURTHER INFORMATION CONTACT: Contact Allen Nicholson, Interdisciplinary Team Leader, Iron

River Ranger District, Phone: (906) 265–5139.

SUPPLEMENTARY INFORMATION: The project area contains approximately 17,700 acres within the Ottawa National Forest, Houghton County, Michigan. The legal location of the National Forest lands within the project area are: all or portions of Section 4–10, 15–22, 27–30, 33, T48N R36W; Sections 1, 12, 24, 25, T48N R37W; Sections 29–34, T49N R36W; Sections 22, 23, 26, 27, 34–36, T49N R37W, Michigan Meridian.

The Forest Service proposes to harvest approximately 111,000 hundred cubic feet (equivalent to approximately 60 million board feet, MMBF) of timber through a variety of harvest methods on approximately 7,080 acres of forest land. Silviculture systems include approximately 1830 acres of salvage-modified clearcut, 1070 acres of salvage/sanitation harvest, 3,250 acres of selection harvest, 200 acres of shelterwood preparation harvest, and 730 acres of commercial thinning. Connected actions include: approximately 2120 acres of mechanical site preparation for natural and artificial regeneration, and supplemental planting on approximately 140 acres. An estimated 2.5 miles of new system road construction, 8.0 miles of system road reconstruction, and 4.0 miles of temporary road construction would be needed to access timber harvest areas. Temporary roads would be evaluated based on the proposed national transportation policy and would be either obliterated following completion of sale activities or added to the classified road system in the Maintenance Level 1 closed category. The proposal also includes an estimated 3.5 miles of system road decommissioning, permanent closure or obliteration of approximately 16 miles of unclassified roads currently closed, and permanent closure or obliteration of approximately 7.5 miles of unclassified roads currently open. Approximately 0.5 additional miles of Forest Road 1338, currently open, would be managed as closed to highway vehicles. A dispersed parking/camping area would be provided at this new road closure. Approximately 400 feet of new trail and a canoe access at Echo Lake would be constructed, about 100 feet of trail would be resurfaced at Penegor Lake, and improvements made to small parking areas at Penegor and Echo Lakes.

The proposal also includes maintaining approximately 110 acres of permanent openings for wildlife habitat and the classification of approximately 1660 acres of old growth.

The Ottawa Forest Plan provides guidance for management activities within the potentially affected area through its goals, objectives, standards and guidelines, and management area direction. The proposed projects include activities in management areas (MAs) 1.1,2.1,3.1, and 4.1. This proposal includes 11 openings greater than 40 acres (size range is approximately 50 to 480 acres), to treat high-risk stands of jack pine (Regional Forester approval for exceeding the forty acre regeneration and salvage/sanitation harvest would be required prior to signing the Record of Decision).

Range of Alternatives

The Forest Service will consider a range of alternatives. One of these will be the ''no action'' alternative in which none of the proposed activities will be implemented. Additional alternatives will examine varying levels and locations for the proposed activities to achieve the proposal's purposes, as well as to respond to the issues and other resource values.

The EIS will analyze the direct, indirect, and cumulative environmental effects of the alternatives. Past, present, and projected activities on both private and National Forest lands will be considered. The EIS will disclose site-specific mitigation measures, if needed, and their effectiveness.

Preliminary Issues

Tentatively, several preliminary issues of concern have been identified. These issues are briefly described below:

Transportation System: Implementation of the proposed action would permanently close or obliterate roads not needed for the transportation system, and manage an additional segment of road as closed to some types of motorized use. This may affect the public's ability to use traditional access routes.

Vegetation: There are large areas of mature and declining jack pine that are at high risk of loss to insects, disease, or fire. When proposed harvest areas are added to adjacent recently harvested areas (10–15 years ago) several temporary open areas exceeding 40 acres will be created.

Canada Lynx: Effective April 24, 2000, the lynx was listed as a threatened species by the US Fish and Wildlife Service. The lynx will be addressed in the EIS.

Decisions To Be Made

The Ottawa Forest Supervisor will decide the following:

- Whether or not to harvest timber and, if so, identify the selection of, and site-specific location of, appropriate timber management practices (silvicultural prescription, fuels treatment, site preparation, and reforestation), road construction, reconstruction, and temporary road construction necessary to provide access to accomplish treatments, and appropriate mitigation measures.
- Whether or not to permanently close or obliterate roads and restrict motorized access, and if so, where and how.
- Whether or not to maintain permanent openings, and, if so, the location and size of openings to be maintained.
- What facilities, if any, should be constructed to enhance dispersed recreation opportunities.
- What, if any, specific project monitoring requirements would be needed to assure mitigation measures are implemented and effective.

Public Involvement and Scoping: In February 1996, initial scoping was done for the Trophy Barr timber sale, now one of the projects included in the Plantation Lakes analysis. Comments received regarding the Trophy Barr sale project proposal prior to this notice will be included in the documentation for the EIS. The public is encouraged to take part in the process by communicating or visiting with Forest Service officials at any time during the analysis and prior to the decision. The Forest Service will be seeking information, comments, and assistance from Federal, State, and local agencies, as well as other individuals or organizations who may be interested in, or affected by, the proposed action. This input will be used in preparation of the draft and final EIS. The scoping process will include:

- Identifying potential issues.
- Identifying major issues to be analyzed in depth.
- Identifying alternatives to the proposed action.
- Identifying potential environmental effects of this proposed action and the alternatives (i.e. direct, indirect, and cumulative effects and connected actions).

Estimated Dates for Filing. While public participation in this analysis is welcome at any time, comments received within 30 days of the publication of this notice will be especially useful in the preparation of the Draft EIS. The Draft EIS is expected to be filed with the Environmental Protection Agency (EPA) and to be available for public review by September, 2000. At that time EPA will

publish a Notice of Availability of the draft EIS in the **Federal Register**. The comment period on the draft EIS will be 45 days from the date the EPA publishes the Notice of Availability in the **Federal Register**. It is very important that those interested in the management of this area participate at that time.

The final EIS is scheduled to be completed by March, 2001. In the final EIS, the Forest Service is required to respond to comments and responses received during the comment period that pertain to the environmental consequences discussed in the draft EIS and applicable laws, regulations, and policies considered in making a decision regarding the proposal.

Reviewer's Obligations: The Forest Service believes, at this early stage, it is important to give reviewers notice of several court rulings related to public participation in the environmental review process. First, reviewers of draft environmental impact statements must structure their participation in the environmental review of the proposal so that it is meaningful and alerts an agency to the reviewer's position and contentions. *Vermont Yankee Nuclear Power Corp.* v. *NRDC*, 435 U.S. 519, 553 (1978). Also, environmental objections that could be raised at the draft environmental impact statement stage may be waived or dismissed by the courts. *City of Angoon* v. *Hodel*, 803 F2d 1016, 1022 (9th Cir. 1986) and *Wisconsin Heritages, Inc.* v. *Harris*, 490 F. Supp. 1334, 1338 (E.D. Wis. 1980). Because of these court rulings, it is very important that those interested in this proposed action participate by the close of the 45 day comment period so that substantive comments and objectives are made available to the Forest Service at a time when it can meaningfully consider and respond to them in the final EIS.

To be most helpful, comments on the draft EIS should be as specific as possible and may address the adequacy of the statement or the merit of the alternatives discussed. Reviewers may wish to refer to the Council on Environmental Quality regulations for implementing the procedural provisions of the National Environmental Policy Act at 40 CFR fl503.3 in addressing these points.

Responsible Official: Phyllis A. Green, Forest Supervisor, Ottawa National Forest, E6248 U.S. 2, Ironwood, MI 49938, is the Responsible Official. As the Responsible Official she will decide if the proposed project will be implemented. She will document the decision and reasons for the decision in the Record of Decision. I have delegated the responsibility to prepare the EIS to Leanne Marten, District Ranger, Ontonagon Ranger District.

Dated: May 17, 2000.

Phyllis A. Green,

Forest Supervisor, Ottawa National Forest.

[FR Doc. 00–13027 Filed 5–25–00; 8:45 am]

BILLING CODE 3410–11–M

DEPARTMENT OF AGRICULTURE

Rural Housing Service

Notice of Request for Extension of a Currently Approved Information Collection

AGENCY: Rural Housing Service (RHS), USDA.

ACTION: Proposed collection: comments request.

SUMMARY: In accordance with the Paperwork Reduction Act of 1995, this notice announces the Rural Housing Service's intention to request an extension for a currently approved information collection in support of the program for Farm Labor Housing Loan and Grant Policies, Procedures and Authorizations for Multi-Family Housing.

DATES: Comments on this notice must be received by July 25, 2000 to be assured of consideration.

FOR FURTHER INFORMATION CONTACT: Mary Fox, Senior Loan Specialist, Multi-Family Housing Processing Division, RHS, United States Department of Agriculture, Stop 0781, 1400 Independence Ave., SW, Washington, DC 20250–0781, Telephone (202) 720–1624.

SUPPLEMENTARY INFORMATION:

Title: Farm Labor Housing Loan and Grant Policies, Procedures and Authorizations.

OMB Number: 0575–0045.

Expiration Date of Approval: June 30, 2000.

Type of Request: Extension of a currently approved information collection.

Abstract: The Rural Housing Service (RHS) is authorized under Section 514, 516, and 521 of Title V of the Housing Act of 1949, as amended, to make initial and subsequent loans and grants to provide housing and related facilities for domestic farm labor. A loan only can be made to a farmowner, family farm partnership, family farm corporation, or an association of farmers whose farming operations demonstrate a need for farm labor housing and that is engaged in agricultural or aquacultural farming operations and which will own the housing and operate it on a nonprofit basis. A loan can also be made to any limited partnership in which the general partner is a nonprofit entity. A loan and/or grant can be made to public, private nonprofit organizations for domestic farm labor in areas where need exists. In some cases, rental assistance may be provided to eligible tenants.

RHS has the responsibility of assuring the public that funds for Farm Labor Housing projects are financed to build, buy, improve or repair farm labor housing and related facilities. The facilities financed are to have decent, safe and sanitary living conditions and are managed and operated as mandated by Congress. 7 CFR part 1944, subpart D was issued to set forth the policies and procedures and delegation of authority for making initial and subsequent insured loans under Section 514 and grants under Section 516 to provide housing and related facilities for domestic farm labor and to assure that applicable laws and authorities are carried out as intended.

With the provisions of this regulation, RHS will be able to provide the financial assistance and necessary guidance to applicants in the development of their project proposals. It provides the Agency the capacity to meaningfully evaluate the feasibility of the proposed projects. RHS will be able to assure Congress and the general public that all LH projects will be operated for purposes that are intended, and for the benefit of those they are mandated to serve.

The required information is collected on a project-by-project basis and is done so in accordance with the amended Housing Act of 1949, so that RHS can provide guidance and be assured of compliance with terms and conditions of loan, grant, and or subsidy agreements.

Estimate of Burden: Public reporting burden for this collection of information is estimated to average 10.93 hours per response.

Respondents: Farms, Not-for-profit Institutions, and State, Local or Tribal Government.

Estimated Number of Respondents: 95.

Estimated Number of Responses per Respondent: 8.21.

Estimated Total Annual Burden on Respondents: 8,524 hours.

Copies of this information collection can be obtained from Brenda Frost, Regulations and Paperwork Management Branch, Support Services Division, at (202) 692–0037.

Comments are invited on: (a) Whether the proposed collection of information is necessary for the proper performance of the functions of RHS, including

whether the information will have practical utility; (b) the accuracy of RHS's estimate of the burden of the proposed collection of information including the validity of the methodology and assumptions used; (c) ways to enhance the quality, utility and clarity of the information to be collected; and (d) ways to minimize the burden of the collection of information on those who are to respond, including through the use of appropriate automated, electronic, mechanical, or other technological collection techniques or other forms of information technology. Comments may be sent to Brenda Frost, Regulations and Paperwork Management Branch, U.S. Department of Agriculture, Rural Development, STOP 0743, 1400 Independence Ave., SW, Washington, DC 20250–0743. All responses to this notice will be summarized and included in the request for OMB approval. All comments will also become a matter of public record.

Dated: May 10, 2000.

Obediah G. Baker, Jr.,

Acting Administrator, Rural Housing Service.

[FR Doc. 00–13237 Filed 5–25–00; 8:45 am]

BILLING CODE 3410–XV–P

DEPARTMENT OF AGRICULTURE

Rural Utilities Service

Jackson County Lake Project

AGENCY: Rural Utilities Service, USDA.

ACTION: Notice of Availability of Draft Environmental Impact Statement and Notice of Public Meeting.

SUMMARY: Notice is hereby given that the Rural Utilities Service (RUS) is issuing a Draft Environmental Impact Statement (EIS) for the Jackson County Lake Project. The Draft EIS was prepared pursuant to the National Environmental Policy Act of 1969 (NEPA) (U.S.C. 4231 *et seq.*) in accordance with the Council on Environmental Quality (CEQ) regulations for implementing the procedural provisions of NEPA (40 CFR parts 1500–1508) and RUS regulations (7 CFR part 1940, Subpart G). RUS invites comments on the Draft EIS.

The purpose of the EIS is to evaluate the potential environmental impacts of and alternatives to the Jackson County Empowerment Zone (EZ) Community, Incorporated and Jackson County Water Association's (JCWA) applications for financial assistance to provide water supply for the residents of Jackson County and parts of surrounding counties. The project, known as the Jackson County Lake Project, proposes to construct a roller-compacted concrete dam to create a reservoir within Jackson County, Kentucky, and to construct a raw water transmission main from the proposed reservoir to the JCWA Treatment Plant. A 300-foot buffer zone surrounding the reservoir horizontally from the normal pool level has been proposed to protect the water quality of the reservoir by restricting development and certain land uses in this area. Also included in the proposal is the construction of a water intake structure and a pump house to pump water out of the reservoir. Proposed recreational development around the reservoir may include a boat ramp, boat dock, public beach, hiking trails, picnic areas, and a primitive campground.

DATES: Written comments on this Draft EIS will be accepted on or before July 10, 2000. A public meeting will be held on June 27, 2000. The public meeting will be held in two sessions, one beginning at 10 a.m. and one beginning at 7 p.m.

ADDRESSES: To send comments or for more information, contact: Mark S. Plank, USDA, Rural Utilities Service, Engineering and Environmental Staff, 1400 Independence Avenue, Mail Stop 1571, Washington DC 20250, telephone (202) 720–1649, fax (202) 720–0820, or email: mplank@rus.usda.gov. Further information can also be obtained from: Thomas G. Fern, State Director, USDA, Rural Development State Office, 771 Corporate Drive, Suite 200, Lexington, KY 40503, telephone (606) 224–7300, or fax (606) 224–7340. The public meeting will be held in the gymnasium of Jackson County High School, located on U.S. 421.

A copy of the Draft EIS can be obtained or viewed online at http://www.usda.gov/rus/water/ees/deis-jc.htm. The files are in a portable document format (pdf); in order to review or print the document, users need to obtain a free copy of Acrobat Reader. The Acrobat Reader can be obtained from http://www.adobe.com/prodindex/acrobat/readstep.html.

Copies of the Draft EIS will be available for public review during normal business hours at the following locations:

Jackson County Public Library, Courthouse Square, PO Box 160, McKee, KY 40447, (606) 287–8113

Natural Resources Conservation Service, U.S. Highway 421 South, McKee, KY 40447, (606) 287–8311

Jackson County Extension Service, 263 U.S. Highway 421 South, PO Box 188, McKee, KY 40447, (606) 287–7693

Kentucky Highlands Investment Corporation, 362 Old Whitley Road, London, KY 40741, (606) 864–5175

Jackson County EZ Community, Incorporated, McCammon Ridge Road, PO Box 280, McKee, KY 40447, (606) 287–8395

USDA Rural Development, 771 Corporate Drive, Suite 200, Lexington, KY 40503, (606) 224–7300.

SUPPLEMENTARY INFORMATION: Pursuant to Subchapter C, Part 1 (Empowerment Zones, Enterprise Communities and Rural Development Investment Areas) of Title XIII of the Omnibus Budget Reconciliation Act of 1993, Jackson County, Kentucky is located in an area designated as an Empowerment Zone/Enterprise Community (EZ/EC) (see **Federal Register** Vol. 60, No. 24, February 6, 1995). The purpose of the EZ/EC initiative is to empower rural communities and their residents to create opportunities for economic development as part of a Federal-State-local and private sector partnership. The proposed action is an integral component of the EZ/EC initiative as identified in the Kentucky Highland Empowerment Zone's Strategic Plan. The proposed action will improve the area's water supply necessary for promoting economic development in the area.

The Jackson County EZ Community, Inc. and the JCWA have applied for financial assistance for the Jackson County Lake Project from the following: RUS; Appalachian Regional Commission; U.S. Department of Commerce, Economic Development Administration; Department of Housing and Urban Development; Kentucky Highlands Empowerment Zone; and Kentucky Tobacco Settlement money. In accordance with 40 CFR 1501.5, Lead Agencies, the RUS is the lead Agency for the EIS and the U.S. Forest Service is the Cooperating Agency.

A number of alternatives were evaluated in the EIS and were determined to be unreasonable or inefficient due to environmental or economic reasons or due to an insufficient yield to meet the projected water needs of Jackson County. These alternatives included eleven reservoir sites throughout Jackson County, groundwater development, the expansion of existing surface water storage facilities within Jackson County, water conservation, and importing water from existing surface water resources in surrounding counties to the JCWA Treatment Plan.

Three alternative sites for the dam and reservoir were determined to be reasonable for further consideration,

and are evaluated in the EIS along with the No Action alternative. these alternative reservoir sites include the War Fork and Steer Fork site, the Sturgeon Creek, 8.5 million gallons per day (mgd) site, and the Sturgeon Creek, 2.5 mgd site.

The War Fork and Steer Fork dam site is located about 0.5 miles southwest of Turkey Foot in eastern Jackson County. The dam would be situated on War Fork, 0.75 miles north of the confluence with Steer Fork. The dam would be about 87 to 107 feet tall, 760 to 790 feet long, and 102 to 122 feet wide, creating a reservoir with an average yield of 2.5 mgd of raw water. At a normal pool elevation of 980 feet above mean sea level (MSL), the surface area of this reservoir would be about 116 acres. At a potential maximum floor elevation of 1,000 feet above MSL, the surface area of the reservoir would be approximately 162 acres. The total acreage for a reservoir at maximum flood level at this site, with a 300-foot buffer extending from normal pool level, would be about 337 acres of land. As much of this land is currently part of the Daniel Boone National Forest, land acquisition at this site would require a land exchange with the U.S. Forest Service. the War Fork and Steer Fork reservoir site has been identified as the Lead Agency's Preferred Alternative.

The Sturgeon Creek, 8.5 mgd dam site is located near the Jackson/Owsley County boundary line in eastern Jackson County. The dam would be situated on Sturgeon Creek, just below the confluence with Blackwater Creek. The dam would be about 84 to 100 feet tall, 825 to 850 feet long, and 99 to 115 feet wide, creating a reservoir with an average yield of 8.5 mgd of raw water. Due to this greater yield, a reservoir at this site might be used as a regional water supply source to serve the needs of neighboring counties in addition to Jackson County. At a normal pool elevation of 990 feel above MSL, the surface area of this reservoir would be about 467 acres. At a potential maximum flood elevation of 1,010 feet above MSL, the surface of the reservoir would be approximately 740 acres. The total acreage for a reservoir at maximum flood level at this site, with a 300-foot buffer extending from normal pool level, would be about 1,119 acres of land. all of this land is currently privately owned. Implementation of the project at this site would require the relocation of residents currently living on the project at this site would require the relocation of residents currently living on the project site and the demolition or relocation of existing structures in this area, including homes, barns, and outbuildings. There would also be connected actions associated with the project at this site, such as plugging water and oil wells in the project area, closing existing septic and storage tanks, and relocating roadways, such as KY 30.

The Sturgeon Creek, 3.5 mgd dam site is located near the Jackson/Owsley County boundary line in eastern Jackson County. The dam would be situated on Sturgeon Creek, about 0.6 miles above the confluence with Blackwater Creek. The dam would be about 64 to 67 feet tall, 500 to 600 feet long, and 104 to 107 feet wide, creating a reservoir with an average yield of 3.5 mgd of raw water. At a normal pool elevation of 980 feet above MSL, the furace area of this reservoir would be about 264 acres. At a potential maximum flood elevation of 1,000 feet above MSL, the surface area of the reservoir would be approximately 440 acres. The total acreage for a reservoir at maximum flood level at this site, with a 300–foot buffer extending from normal pool level, would be about 643 acres of land. All of this land is currently privately owned. Implementation of the project at this site would require the relocation of residents currently living on the project site and the demolition or relocation of existing structures in this area, including homes, barns, and outbuildings. There would also be connected actions associated with the project at this site, such as plugging water and oil wells in the project area, closing existing septic and storage tanks, and relocating roadways, such as KY 30.

Some major potential environmental impacts associated with the implementation of the proposed action that are common to all three dam and reservoir sites include a significant, beneficial increase in recreational opportunities provided by the reservoir, moderately significant changes in property values in the vicinity of and increases in business development induced by the proposed reservoir, moderately significant impacts to downstream aquatic biota and riparian vegetation due to decreased water quality; and significant impacts on the visual quality of the area, both adverse and beneficial.

There are also major potential site-specific environmental impacts associated with the implementation of the project. The project at the War Fork and Steer Fork site would have slightly greater adverse impacts on downstream water quality as a result of construction activities, due to the Wild and Scenic Study River status of the downstream river segment. In addition, there would be a more significant adverse impact on terrestrial plants and wildlife due to permanent elimination of forest habitat at this site. The Federally-endangered India bat (*Myotis sodalis*) is also more likely to utilize this site for foraging than either of the Sturgeon Creek sites, although it is unlikely that the project will have an adverse effect on the local population of these bats.

Major potential environmental impacts are similar at both of the Sturgeon Creek reservoir sites. Implementation of the project at these sites would result in a significant loss of Prime and other important farmland, moderately significant changes to roadway structure due to the necessary relocation of KY 30, and moderately significant permanent changes in land uses within the project area. The project would likely result in significant disruption of community structure and social relations due to necessary residential relocations from either of the project areas. There would also be a more significant adverse impact on human health and safety in the event of a dam failure at either of the Sturgeon Creek sites. In addition, a preliminary cultural resources survey indicated a potentially significant archeological site within the boundaries of both Sturgeon Creek reservoir sites, which would require Phase II testing, and the potential for historic sites and undisturbed, intact cultural deposits to be located there.

With this notice, RUS invites any affected Federal, State, and local Agencies and other interested persons to comment on the Draft EIS. RUS will hold a public meeting on June 27, 2000, in the gymnasium of Jackson County High School, located on U.S. 421. This public meeting will be held in two sessions, one beginning at 10 a.m. and one beginning at 7 p.m. In accordance with 40 CFR Section 1503.1, Inviting Comments, the purpose of the meeting will be to solicit comments from interested parties on the Draft EIS for the Jackson County Lake Project.

Throughout the Jackson County Lake Project EIS, two definitions of the No Action alternative were analyzed. The first definition, identified in the EIS as the No Change alternative, describes a situation in which nothing is done to meet the projected water and recreation needs of Jackson County. The No Change alternative was determined to be unreasonable due to the documented need for water in Jackson County. Therefore, a second definition, identified as the No Action alternative in the EIS, was also analyzed. The No Action alternative assumes that, although a dam and reservoir will not be constructed to meet the needs of Jackson County, other activities will occur to

increase the current water supply, although in insufficient amounts to meet the projected needs. These activities may include drilling additional water wells throughout Jackson County, constructing water transmission lines from existing resources, such as intermittent streams, within the County to the JCWA Treatment Plant, or water conservation.

The major environmental and human health and safety impacts that would result from implementation of the No Action alternative include: Significant, continued lack of recreation needs within Jackson County and the surrounding region; a moderately significant adverse impact on human health and safety due to an insufficient water supply; a significant impediment to growth of industry, residential devleopment, and employment in Jackson County; an impediment to other development goals of the EZ/EC; and a significant potential to adversely and disproportionately affect minority or low-income groups due to further economic degradation and due to adverse health impacts associated with an insuficient water supply.

Dated: May 22, 2000.

John P. Romano,

Deputy Administrator, Water and Environmental Programs.

[FR Doc. 00–13294 Filed 5–25–00; 8:45 am]

BILLING CODE 3410–15–M

COMMITTEE FOR PURCHASE FROM PEOPLE WHO ARE BLIND OR SEVERELY DISABLED

Procurement List; Additions

AGENCY: Committee for Purchase From People Who Are Blind or Severely Disabled.

ACTION: Additions to the Procurement List.

SUMMARY: This action adds to the Procurement List commodities to be furnished by nonprofit agencies employing persons who are blind or have other severe disabilities.

EFFECTIVE DATE: June 26, 2000.

ADDRESSES: Committee for Purchase From People Who Are Blind or Severely Disabled, Jefferson Plaza 2, Suite 10800, 1421 Jefferson Davis Highway, Arlington, Virginia 22202–3259.

FOR FURTHER INFORMATION CONTACT: Louis R. Bartalot (703) 603–7740.

SUPPLEMENTARY INFORMATION:

On February 4 and March 31, 2000, the Committee for Purchase From People Who Are Blind or Severely Disabled published notices (65 F.R. 5492 and 17255) of proposed additions to the Procurement List.

After consideration of the material presented to it concerning capability of qualified nonprofit agencies to provide the commodities and impact of the additions on the current or most recent contractors, the Committee has determined that the commodities listed below are suitable for procurement by the Federal Government under 41 U.S.C. 46–48c and 41 CFR 51–2.4.

I certify that the following action will not have a significant impact on a substantial number of small entities. The major factors considered for this certification were:

1. The action will not result in any additional reporting, recordkeeping or other compliance requirements for small entities other than the small organizations that will furnish the commodities to the Government.

2. The action will not have a severe economic impact on current contractors for the commodities.

3. The action will result in authorizing small entities to furnish the commodities to the Government.

4. There are no known regulatory alternatives which would accomplish the objectives of the Javits-Wagner-O'Day Act (41 U.S.C. 46–48c) in connection with the commodities proposed for addition to the Procurement List.

Accordingly, the following commodities are hereby added to the Procurement List:

Blanket Set, Bed

6545–00–911–1300

Thumbtacks, Maptacks and Pushpins

7510–00–272–6886 (Thumbtacks)
7510–00–272–6887 (Thumbtacks)
7510–00–272–3099 (Maptacks)
7510–00–285–5844 (Maptacks)
7510–00–940–0935 (Pushpins)

This action does not affect current contracts awarded prior to the effective date of this addition or options that may be exercised under those contracts.

Leon A. Wilson, Jr.,

Executive Director.

[FR Doc. 00–13316 Filed 5–25–00; 8:45 am]

BILLING CODE 6353–01–P

COMMITTEE FOR PURCHASE FROM PEOPLE WHO ARE BLIND OR SEVERELY DISABLED

Procurement List; Proposed Additions

AGENCY: Committee for Purchase From People Who Are Blind or Severely Disabled.

ACTION: Proposed Additions to Procurement List.

SUMMARY: The Committee has received proposals to add to the Procurement List commodities and services to be furnished by nonprofit agencies employing persons who are blind or have other severe disabilities.

Comments Must Be Received on or Before: June 26, 2000.

ADDRESSES: Committee for Purchase From People Who Are Blind or Severely Disabled, Jefferson Plaza 2, Suite 10800, 1421 Jefferson Davis Highway, Arlington, Virginia 22202–3259.

FOR FURTHER INFORMATION CONTACT: Louis R. Bartalot (703) 603–7740.

SUPPLEMENTARY INFORMATION:

This notice is published pursuant to 41 U.S.C. 47(a)(2) and 41 CFR 51–2.3. Its purpose is to provide interested persons an opportunity to submit comments on the possible impact of the proposed actions.

If the Committee approves the proposed additions, all entities of the Federal Government (except as otherwise indicated) will be required to procure the commodities and services listed below from nonprofit agencies employing persons who are blind or have other severe disabilities.

I certify that the following action will not have a significant impact on a substantial number of small entities. The major factors considered for this certification were:

1. The action will not result in any additional reporting, recordkeeping or other compliance requirements for small entities other than the small organizations that will furnish the commodities and services to the Government.

2. The action will result in authorizing small entities to furnish the commodities and services to the Government.

3. There are no known regulatory alternatives which would accomplish the objectives of the Javits-Wagner-O'Day Act (41 U.S.C. 46–48c) in connection with the commodities and services proposed for addition to the Procurement List. Comments on this certification are invited. Commenters should identify the statement(s) underlying the certification on which they are providing additional information.

The following commodities and services have been proposed for addition to Procurement List for production by the nonprofit agencies listed:

Commodities

PVA Sponge Mop Refill

M.R. 1037
NPA: The Lighthouse for the Blind, Inc., Seattle, Washington

Cover, Mattress
7210–00–140–4235
NPA: Winston-Salem Industries for the Blind, Winston-Salem, North Carolina

Nonfat Dry Milk
8910–00–NSH–0001
NPA: Advocacy and Resources Corp. (ARC), Cookeville, Tennessee, Transylvania Vocational Services, Inc., Brevard, North Carolina

Services

Grounds Maintenance

U.S. Army Reserve Centers at the following locations:

Lydia Street Ext., Waterbury, Connecticut
Phelps Road, East Windsor, Connecticut

AMSA 69

26 Seamans Lane, Milford, Connecticut
499 Mile Lane, Middletown, Connecticut

AMSA 72

536 Spring Street, Windsor Locks, Connecticut
200 Wintergreet Avenue, New Haven, Connecticut
180 High Street, Fairfield, Connecticut
South Quaker Lane, West Hartford, Connecticut
NPA: CW Resources, Inc., New Britain, Connecticut

Janitorial/Custodial

Bureau of Land Management, Montana State Office Fire Office Complex for the following locations in Billings, Montana:

The Fire Operations and Air Tanker Base Building, 1299 Rimtop Drive
Billings Zone Fire Cache Building, Airport Industrial Park IP–7, 551 Northview Drive
NPA: Community Options Resource Enterprises, Inc., Billings, Montana

Janitorial/Custodial

Bureau of Land Management, Carlsbad Field Office, 620 East Green Street, Carlsbad, New Mexico

Leon A. Wilson, Jr.
Executive Director.

[FR Doc. 00–13317 Filed 5–25–00; 8:45 am]

BILLING CODE 6353–01–P

COMMISSION ON CIVIL RIGHTS

Agenda and Notice of Public Meeting of the Utah Advisory Committee

Notice is hereby given, pursuant to the provisions of the rules and regulations of the U.S. Commission on Civil Rights, that a meeting of the Utah Advisory Committee to the Commission will convene at 6 p.m. and adjourn at 8 p.m. on Thursday, June 22, 2000, at the Horizonte School, 1234 So. Main Street, Salt Lake City, Utah 84101. The purpose of the meeting is to discuss civil rights issues in the State and plan future activities.

Persons desiring additional information, or planning a presentation to the Committee, should contact John Dulles, Director of the Rocky Mountain Regional Office, 303–866–1040 (TDD 303–866–1049). Hearing-impaired persons who will attend the meeting and require the services of a sign language interpreter should contact the Regional Office at least ten (10) working days before the scheduled date of the meeting.

The meeting will be conducted pursuant to the provisions of the rules and regulations of the Commission.

Dated at Washington, DC, May 19, 2000.

Lisa M. Kelly,
Special Assistant to the Staff Director, Regional Programs Coordination Unit.

[FR Doc. 00–13214 Filed 5–25–00; 8:45 am]

BILLING CODE 6335–01–P

DEPARTMENT OF COMMERCE

Submission for OMB Review; Comment Request

DOC has submitted to the Office of Management and Budget (OMB) for clearance the following proposal for collection of information under the provisions of the Paperwork Reduction Act (44 U.S.C. chapter 35).

Agency: Census Bureau.

Title: 2000 Panel of the Survey of Income and Program Participation, Wave 3.

Form Number(s): SIPP/CAPI Automated Instrument.

Agency Approval Number: 0607–0865.

Type of Request: Revision of a currently approved collection.

Burden: 37,650.

Number of Respondents: 26,250.

Avg Hours Per Response: 30 minutes.

Needs and Uses: The Census Bureau conducts the Survey of Income and Program Participation (SIPP) to collect information concerning the distribution of income received directly as money or indirectly as in-kind benefits. SIPP data are used by economic policymakers, the Congress, state and local governments, and Federal agencies that administer social welfare and transfer payment programs such as the Department of Health and Human Services, the Department of Housing and Urban Development, and the Department of Agriculture.

The SIPP is a longitudinal survey, in that households in the panel are interviewed at 4-month intervals or waves over the life of the panel. The duration of a panel is typically 3 to 4 years. The length of the 2000 SIPP Panel is subject to the approval of budget initiatives but is currently scheduled for one year and will include three waves of interviews.

The survey is molded around a central core of labor force and income questions, health insurance questions, and questions concerning government program participation that remain fixed throughout the life of the panel. The core questions are asked in Wave 1 and are updated during subsequent interviews. The core is supplemented with additional questions or topical modules designed to answer specific needs.

This request is for clearance of the topical modules for Wave 3. The core questionnaire and topical modules for Waves 1 and 2 were cleared previously. The topical modules for Wave 3 are: Medical Expenses and Utilization of Health Care (Adults and Children); Work Related Expenses and Child Support Paid; and Assets, Liabilities, and Eligibility. Wave 3 interviews will be conducted from October 2000 through January 2001. Additionally, a reinterview for quality control purposes will be conducted with a small subsample of respondents throughout the life of the panel.

Affected Public: Individuals or households.

Frequency: Every 4 months.

Respondent's Obligation: Voluntary.

Legal Authority: Title 13, United States Code, Section 182.

OMB Desk Officer: Susan Schechter, (202) 395–5103.

Copies of the above information collection proposal can be obtained by calling or writing Linda Engelmeier, DOC Forms Clearance Officer, (202) 482–3272, Department of Commerce, room 5033, 14th and Constitution Avenue, NW, Washington, DC 20230 (or via the Internet at LEngelme@doc.gov).

Written comments and recommendations for the proposed information collection should be sent within 30 days of publication of this notice to Susan Schechter, OMB Desk Officer, room 10201, New Executive Office Building, Washington, DC 20503.

Dated: May 23, 2000.

Madeleine Clayton,

Management Analyst, Office of the Chief Information Officer.

[FR Doc. 00–13296 Filed 5–25–00; 8:45 am]

BILLING CODE 3510–07–P

DEPARTMENT OF COMMERCE

Submission for OMB Review; Comment Request

DOC has submitted to the Office of Management and Budget (OMB) for clearance the following proposal for collection of information under the provisions of the Paperwork Reduction Act (44 U.S.C. chapter 35).

Agency: Census Bureau.

Title: Survey of Housing Starts, Sales, and Completions.

Form Number(s): SOC–QI/SF.1, SOC–QI/MF.1.

Agency Approval Number: 0607–0110.

Type of Request: Extension of a currently approved collection.

Burden: 9,395 hours.

Number of Respondents: 26,000.

Avg Hours Per Response: 5 minutes.

Needs and Uses: The U.S. Census Bureau is requesting an extension of the currently approved collection for the Survey of Housing Starts, Sales, and Completions, also known as the Survey of Construction (SOC).

Government agencies and private companies use statistics from the SOC to monitor and evaluate the large and dynamic housing construction industry. From the SOC, three principal economic indicators are produced: Housing Starts, New Home Sales, and Housing Completions. In addition, a number of other statistical series are produced, including extensive information on the physical characteristics of new residential buildings, and indexes measuring rates of inflation in the price of new buildings. These statistics are based on a sample of residential buildings in permit-issuing places and a road canvass in a sample of land areas not covered by building permit systems.

We mail survey forms to the respondents to complete. A few days later, field representatives either call or visit the respondents to enter their survey responses into a laptop computer using Computer Assisted Personal Interviewing (CAPI). Approximately 26,000 buildings are selected in the sample each year. The Builder, real estate agent, rental agent, or new home owner is contacted an average of 4.34 times (at monthly intervals) over the course of the building project.

Affected Public: Businesses or other for-profit organizations.

Frequency: Monthly.

Respondent's Obligation: Voluntary.

Legal Authority: Title 13 U.S.C., Section 182.

OMB Desk Officer: Susan Schechter, (202) 395–5103.

Copies of the above information collection proposal can be obtained by calling or writing Linda Engelmeier, DOC Forms Clearance Officer, (202) 482–3272, Department of Commerce, room 5033, 14th and Constitution Avenue, NW, Washington, DC 20230 (or via the Internet at LEngelme@doc.gov).

Written comments and recommendations for the proposed information collection should be sent within 30 days of publication of this notice to Susan Schechter, OMB Desk Officer, room 10201, New Executive Office Building, Washington, DC 20503.

Dated: May 23, 2000.

Madeleine Clayton,

Management Analyst, Office of the Chief Information Officer.

[FR Doc. 00–13297 Filed 5–25–00; 8:45 am]

BILLING CODE 3510–07–P

DEPARTMENT OF COMMERCE

Bureau of Export Administration

Regulations and Procedures Technical Advisory Committee; Notice of Partially Closed Meeting

The Regulations and Procedures Technical Advisory Committee (RPTAC) will meet June 13, 2000, 9:00 a.m., Room 3884, in the Herbert C. Hoover Building, 14th Street between Constitution and Pennsylvania Avenues, NW, Washington DC. The Committee advises the Office of the Assistant Secretary for Export Administration on implementation of the Export Administration Regulations (EAR) and provides for continuing review to update the EAR as needed.

Agenda

Public Session

1. Opening remarks by the Chairperson.
2. Presentation of papers or comments by the public.
3. Update on pending regulatory revisions.
4. Update on BXA policies under review.
5. Discussion of deemed export rule.
6. Discussion of BXA compliance initiatives.
7. Discussion of regulations relating to encryption and high performance computers.

Closed Session

8. Discussion of matters properly classified under Executive Order 12958, dealing with the U.S. export control program and strategic criteria related thereto.

A limited number of seats will be available for the public session. Reservations are not accepted. To the extent that time permits, members of the public may present oral statements to the Committee. The public may submit written statements at any time before or after the meeting. However, to facilitate the distribution of public presentation materials to the Committee members, the Committee suggests that presenters forward the public presentation materials prior to the meeting to the following address: Ms. Lee Ann Carpenter, OSIES/EA/BXA MS: 3876, 14th St. & Constitution Ave., NW, Washington, DC 20230.

The Assistant Secretary for Administration, with the concurrence of the delegate of the General Counsel, formally determined on January 12, 1999, pursuant to section 10(d) of the Federal Advisory Committee Act, as amended, that the series of meetings or portions of meetings of the Committee and of any Subcommittees thereof, dealing with the classified materials listed in 5 U.S.C. 552b(c)(1) shall be exempt from the provisions relating to public meetings found in section 10(a)(1) and 10(a)(3) of the Federal Advisory Committee Act. The remaining series of meetings or portions thereof will be open to the public.

A copy of the Notice of Determination to close meetings or portions of meetings of the Committee is available for public inspection and copying in the Central Reference and Records Inspection Facility, Room 6020, U.S. Department of Commerce, Washington, DC. For more information, call Lee Ann Carpenter at (202) 482–2583.

Dated: May 22, 2000.

Lee Ann Carpenter,

Committee Liaison Officer.

[FR Doc. 00–13253 Filed 5–25–00; 8:45 am]

BILLING CODE 3510–JT–M

DEPARTMENT OF COMMERCE

International Trade Administration

[A–570–836]

Glycine From the People's Republic of China: Extension of Time Limit for Preliminary Results of the New Shipper Review

AGENCY: Import Administration, International Trade Administration, Department of Commerce.

ACTION: Notice of extension of time limit for preliminary results of antidumping duty administrative review.

SUMMARY: The Department of Commerce (''the Department'') is extending the time limit for the preliminary results of a new shipper review of glycine from the People's Republic of China (''China''). This review covers one Chinese producer, Nantong Dongchang Chemical Industry Corp. (''Nantong''), for the period March 1, 1999 through August 31, 1999.

EFFECTIVE DATE: May 26, 2000.

FOR FURTHER INFORMATION CONTACT: Maria Dybczak at (202) 482–5811; Office of AD/CVD Enforcement, Group III, Office 9, Import Administration, International Trade Administration, U.S. Department of Commerce, 14th Street and Constitution Avenue, NW, Washington, D.C. 20230.

The Applicable Statute

Unless otherwise indicated, all citations to the statute are references to the provisions effective January 1, 1995, the effective date of the amendments made to the Tariff Act of 1930 (''the Act'') by the Uruguay Round Agreements Act (''URAA'').

Postponement of Preliminary Results

The Department has determined that it is not practicable to issue its preliminary results of the administrative review within the current time limit of June 28, 2000. *See Decision Memorandum from Edward C. Yang, Office Director to Joseph A. Spetrini, Deputy Assistant Secretary, Enforcement Group III,* May 16, 2000. The Department is extending the time limit for completion of the preliminary results until August 28, 2000 in accordance with Section 751(a)(2)(B)(iv) of the Act.

The deadline for the final results of this review will continue to be 90 days after the signature date of the preliminary results.

Dated: May 16, 2000.

Joseph A. Spetrini,

Deputy Assistant Secretary, Enforcement Group III.

[FR Doc. 00–13321 Filed 5–25–00; 8:45 am]

BILLING CODE 3510–DS–P

DEPARTMENT OF COMMERCE

International Trade Administration

[A–337–804]

Certain Preserved Mushrooms From Chile: Preliminary Rescission of Antidumping Duty Administrative Review

AGENCY: Import Administration, International Trade Administration, Department of Commerce.

ACTION: Notice of preliminary rescission of antidumping duty administrative review.

SUMMARY: In response to a timely request from the petitioners, [1] on January 26, 2000, the Department of Commerce published a notice of initiation of an administrative review of the antidumping duty order on certain preserved mushrooms from Chile with respect to Nature's Farm Products (Chile) S.A. and Ravine Foods Inc. covering the period August 5, 1998, through November 30, 1999. *See Initiation of Antidumping and Countervailing Duty Administrative Reviews,* 65 FR 42280 (January 26, 2000). [2] The Department of Commerce is now preliminarily rescinding this review as a result of the absence of imports and entries into the United States of subject merchandise during the period of review.

EFFECTIVE DATE: May 26, 2000.

FOR FURTHER INFORMATION CONTACT: David J. Goldberger or Katherine Johnson, Import Administration, International Trade Administration, U.S. Department of Commerce, 14th Street and Constitution Avenue, NW, Washington, DC 20230; telephone: (202) 482–4136 or (202) 482–4929, respectively.

SUPPLEMENTARY INFORMATION:

Applicable Statute

Unless otherwise indicated, all citations to the Tariff Act of 1930, as amended (''the Act''), are references to the provisions effective January 1, 1995, the effective date of the amendments made to the Act by the Uruguay Round Agreements Act. In addition, unless otherwise indicated, all citations to the Department of Commerce's regulations are to 19 CFR part 351 (1999).

Background

On January 21, 2000, the Department (''the Department'') issued the antidumping questionnaire to Nature's Farm Products (Chile) S.A. (''NFP'') via its U.S. parent, Nature Farm Products, Inc., and Ravine Foods Inc. (''Ravine''), a Canadian company. On January 26, 2000, the Department published a notice of initiation of an administrative review of the antidumping duty order on certain preserved mushrooms from Chile with respect to NFP and Ravine (65 FR 4228). On February 28, 2000, Ravine advised the Department that the company did not export the subject merchandise to the United States during the period of review (''POR'').

To confirm the accuracy of Ravine's claim, the Department performed a customs query on entries of the subject merchandise exported from Chile and Canada. In so doing, the Department examined U.S. Customs import statistics, and found no imports of the subject merchandise by Ravine, NFP, or any other company from Chile to the United States during the period of review (''POR''). We also found no imports of the subject merchandise from Canada. Accordingly, there is no basis for applying facts available in this instance with regard to NFP, which did not respond to our questionnaire. *See* March 14, 2000, memorandum, ''U.S. Customs Data on Imports of the Subject Merchandise,'' from David J. Goldberger to Irene Darzenta Tzafolias. The petitioners did not comment on these findings.

Scope of the Review

The products covered by this review are certain preserved mushrooms whether imported whole, sliced, diced, or as stems and pieces. The preserved mushrooms covered under this review are the species *Agaricus bisporus* and *Agaricus bitorquis*. ''Preserved mushrooms'' refer to mushrooms that have been prepared or preserved by

[1] The petitioners are the Coalition for Fair Preserved Mushroom Trade which includes the American Mushroom Institute and the following domestic companies: L.K. Bowman, Inc., Nottingham, PA; Modern Mushrooms Farms, Inc., Toughkernamon, PA; Monterrey Mushrooms, Inc., Watsonville, CA; Mount Laurel Canning Corp., Temple, PA; Mushrooms Canning Company, Kennett Square, PA; Southwood Farms, Hockessin, DE; Sunny Dell Foods, Inc., Oxford, PA; United Canning Corp., North Lima, OH.

[2] On December 14, 1999, the Department published a notice of ''Opportunity To Request Administrative Review'' which inadvertently omitted the antidumping duty order on preserved mushrooms from Chile. Therefore, on December 16, 1999, the Department informed interested parties that they could request an administrative review of the antidumping duty order on certain preserved mushrooms from Chile no later than January 3, 2000.

cleaning, blanching, and sometimes slicing or cutting. These mushrooms are then packed and heated in containers including but not limited to cans or glass jars in a suitable liquid medium, including but not limited to water, brine, butter or butter sauce. Preserved mushrooms may be imported whole, sliced, diced, or as stems and pieces. Included within the scope of this review are ''brined'' mushrooms, which are presalted and packed in a heavy salt solution to provisionally preserve them for further processing.

Excluded from the scope of this review are the following: (1) All other species of mushroom, including straw mushrooms; (2) all fresh and chilled mushrooms, including ''refrigerated'' or ''quick blanched mushrooms''; (3) dried mushrooms; (4) frozen mushrooms; and (5) ''marinated,'' ''acidified'' or ''pickled'' mushrooms, which are prepared or preserved by means of vinegar or acetic acid, but may contain oil or other additives.

The merchandise subject to this review is classifiable under subheadings 2003.1000.27, 2003.1000.31, 2003.1000.37, 2003.1000.43, 2003.1000.47, 2003.1000.53, and 0711.90.4000 of the Harmonized Tariff Schedule of the United States (''HTS''). Although the HTS subheadings are provided for convenience and Customs purposes, our written description of the scope of this review is dispositive.

Preliminary Rescission of Review

Pursuant to 19 CFR 351.213(d)(3), the Department may rescind an administrative review, in whole or only with respect to a particular exporter or producer, if the Secretary concludes that, during the period covered by the review, there were no entries, exports, or sales of the subject merchandise. Since the evidence shows that there were no entries of certain preserved mushrooms made by any exporter or producer from Chile during the POR, we are preliminarily rescinding this review in accordance with 19 CFR 351.213(d)(3). The cash-deposit rate for NFP and ''All Other'' producers/exporters of the subject merchandise will remain at 148.51 percent, the rate established in the most recent segment of this proceeding (63 FR 56613, October 22, 1998).

This notice is published in accordance with 19 CFR 351.213(d)(4).

Dated: May 19, 2000.

Richard W. Moreland,

Deputy Assistant Secretary for Import Administration.

[FR Doc. 00–13319 Filed 3–25–00; 8:45 am]

BILLING CODE 3510–DS–M

DEPARTMENT OF COMMERCE

International Trade Administration

[A–588–054; A–588–604]

Tapered Roller Bearings, Four Inches or Less in Outside Diameter, and Components Thereof, From Japan and Tapered Roller Bearings and Parts Thereof, Finished and Unfinished, From Japan; Antidumping Duty Administrative Reviews; Time Limits

AGENCY: Import Administration, International Trade Administration, Department of Commerce.

ACTION: Notice of extension of time limits.

SUMMARY: The Department of Commerce (the Department) is extending the time limits for the preliminary results of the 1998–1999 administrative reviews of the antidumping finding (A–588–054) and duty order (A–588–604) on tapered roller bearings from Japan. These reviews cover 3 manufacturers/exporters of the subject merchandise to the United States and the period October 1, 1998 through September 30, 1999.

EFFECTIVE DATE: May 26, 2000.

FOR FURTHER INFORMATION CONTACT: Deborah Scott at (202) 482–2657 or Robert James at (202) 482–0649, Antidumping and Countervailing Duty Enforcement Group III, Office Eight, Import Administration, International Trade Administration, U.S. Department of Commerce, 14th Street and Constitution Avenue NW., Washington, DC 20230.

SUPPLEMENTARY INFORMATION: Because it is not practicable to complete these reviews within the normal statutory time limit, the Department is extending the time limits for completion of the preliminary results until October 31, 2000 in accordance with section 751(a)(3)(A) of the Tariff Act of 1930, as amended. See Memorandum from Joseph A. Spetrini to Troy H. Cribb, on file in Room B–099 of the main Commerce building. The deadline for the final results of this review will continue to be 120 days after publication of the preliminary results.

These extensions are in accordance with section 751(a)(3)(A) of the Tariff Act of 1930, as amended (19 U.S.C. 1675 (a)(3)(A)).

Dated: May 15, 2000.

Joseph A. Spetrini,

Deputy Assistant Secretary, AD/CVD Enforcement Group III.

[FR Doc. 00–13318 Filed 5–25–00; 8:45 am]

BILLING CODE 3510–DS–P

DEPARTMENT OF COMMERCE

International Trade Administration

Application for Duty-Free Entry of Scientific Instrument

Pursuant to Section 6(c) of the Educational, Scientific and Cultural Materials Importation Act of 1966 (Pub. L. 89–651; 80 Stat. 897; 15 CFR part 301), we invite comments on the question of whether an instrument of equivalent scientific value, for the purposes for which the instrument shown below is intended to be used, is being manufactured in the United States.

Comments must comply with 15 CFR 301.5(a)(3) and (4) of the regulations and be filed within 20 days with the Statutory Import Programs Staff, U.S. Department of Commerce, Washington, DC 20230. Applications may be examined between 8:30 a.m. and 5 p.m. in Room 4211, U.S. Department of Commerce, 14th Street and Constitution Avenue, NW., Washington, DC.

Docket Number: 00–010. *Applicant:* Tulane University, 6823 St. Charles Avenue, New Orleans, LA 70118–5698. *Instrument:* Electron Microscope, Model JEM–2010. *Manufacturer:* JEOL Ltd., Japan. *Intended Use:* The instrument is intended to be used for the study of microstructure of metals, metal oxide fibers, ceramics, semiconductors, composite materials, and geological samples. In these studies, the microscope is used to measure particle and crystal sizes and morphologies, crystalline structure and d-spacing of crystallographic planes, chemical composition and distribution, and number and extent of defects. In addition, the instrument will be used to train graduate students so that they will better understand the microscopy analysis of their samples. *Application accepted by Commissioner of Customs:* April 12, 2000.

Frank W. Creel,

Director, Statutory Import Programs Staff.

[FR Doc. 00–13320 Filed 5–25–00; 8:45 am]

BILLING CODE 3510–DS–P

DEPARTMENT OF COMMERCE

National Institute of Standards and Technology

[Docket Number: 000505126–0126–01

RIN 0693–ZA37

Materials Science and Engineering Laboratory, NIST Center for Neutron Research Supplemental Grants Program—Availability of Funds

AGENCY: National Institute of Standards and Technology, Commerce.

ACTION: Notice.

SUMMARY: The purpose of this notice is to inform potential applicants that the National Institute of Standards and Technology Center for Neutron Research (NCNR) is establishing a supplemental program within the Materials Science and Engineering Laboratory (MSEL) Grants Program, offering financial assistance in the field of Neutron Scattering Research and Spectroscopy.

DATES: Proposals for the NCNR Supplemental Grants Program must be received no later than 5:00 p.m. Eastern Standard Time (June 26, 2000). Applications received after the closing time and date will not be accepted, and they will be returned to the sender.

ADDRESSES: Each applicant must submit one signed original and two paper copies of a proposal with a Grant Application (Standard Form 424, Rev. 7/97 series and other required forms) to Denise Sullivan, National Institute of Standards and Technology, NIST Center for Neutron Research, STOP 8560, Gaithersburg, Maryland 20899–8560, Phone (301) 975–5831. Facsimile, electronic mail, and other forms of electronic application submissions will not be accepted.

FOR FURTHER INFORMATION CONTACT: Ms. Denise Sullivan (301) 975–5831.

SUPPLEMENTARY INFORMATION:

Catalog of Federal Domestic Assistance Name and Number: Measurement and Engineering Research and Standards—11.609.

Authority: As authorized under 15 U.S.C. 272(b)(7) and (c)(16), the MSEL conducts a basic and applied research program directly and through grants and cooperative agreements to eligible recipients.

Program Description/Objectives

The primary objective of the supplemental program in Neutron Research is to develop new areas of neutron instrumentation with emphasis on cold neutrons; to explore and develop new areas of neutron scattering science, with emphasis on macromolecular science, condensed matter physics, and chemistry; to assist and train facility users in their research, and to conduct other outreach and educational activities that advance the use of neutrons by U.S. university and industrial scientists.

Eligibility

The NCNR Supplemental Grants Program will be open to colleges and universities in the United States.

Funding Instrument

The funding instrument will be a cooperative agreement, to allow substantial NIST involvement in directing and collaborating on the scope of work.

Funding Availability

Proposals will be considered for research projects with durations up to five years, subject to the availability of funds, satisfactory progress, and continuing relevance to the objectives of the NIST Center for Neutron Research. The anticipated level of funding for the supplemental program in Neutron Research in the MSEL Grants Program is for one ward of up to $2,000,000 per year.

Proposal Review and Evaluation Criteria

Proposals will be reviewed in a two-step process. First, an independent, objective panel of at least three individuals knowledgeable about neutron scattering research and spectroscopy will conduct a technical review of proposals, based on the evaluation criteria. Second, the Center Director will make the final award selection. In making the final award selection, the Center Director will take into consideration the results of the panel's evaluations, including rank, the compatibility of the applicant's proposal with the program objectives of the NCNR, and the Center Director's judgment as to which application, when the slate is taken as a whole, is likely to best further the objectives of the NCNR Supplemental Grants Program, described above in the ''Program Description/Objectives'' section. If an award is made to an applicant inconsistent with the ranking by technical reviewers, the Center Director shall justify the selection in writing. The final approval of the selected application and award of a cooperative agreement will be made by the NIST Grants Officer based on compliance with program requirements and whether the recommended applicants appear competently managed, responsible, and committed to achieving project objectives. The decision of the Grants Officer is final.

For the NCNR Supplemental Grants Program, the evaluation criteria the technical reviewers will use in evaluating the proposals are a follows:

1. Qualifications and experience of the Principle Investigator in neutron scattering research, as demonstrated by extensive publications and invited lectures in condensed matter physics, chemistry, material science, macromolecular science or ralted fields. (15%)
2. Qualifications and experience of the proposed staff of the university in neutron scattering research or in related scientific or engineering areas that are key to the activities contained in the proposal, as demonstrated by resumes of staff proposed for this program. (25%)
3. Quality of the proposed research and development plan and its potential impact on neutron scattering science, particularly in the areas of macromolecular science, condensed matter physics, and chemistry. (30%)
4. Quality of the plan in the terms of providing research assistance to U.S. neutron researchers using the NCNR facilities and related training, education, and outreach plan. (20%)
5. Quality of the plan for special engagement and outreach to minority or female students, professional scientists, or institutions. (10%)

Award Period

Proposals will be considered for research projects with a duration of up to five years. When a proposal for a multi-year award is approved, funding will generally be provided for only the first year of the program. If an application is selected for funding, NIST has no obligation to provide any additional funding in connection with that award. Renewal of an award to increase funding or extend the period of performance is at the total discretion of NIST. Funding for each subsequent year of a multi-year proposal will be contingent upon satisfactory progress, continued relevance to the mission of the NCNR program, and the availability of funds.

Matching Funds

This program does not require the recipient to provide any matching funds.

Application Kit

An application kit, containing all required application forms and certifications is available by contacting Ms. Denise Sullivan, (301) 975-5831. The application kit includes the following:

SF 424 (Rev 7/97)—APPLICATION FOR FEDERAL ASSISTANCE
SF 424A (Rev 7/97)—BUDGET INFORMATION—Non-Construction Programs
SF 424B (Rev 7/97)—ASSURANCES—Non-Construction Programs
CD 511 (7/91)—CERTIFICATION REGARDING DEBARMENT, SUSPENSION, AND OTHER RESPONSIBILITY MATTERS; DRUG-FREE WORKPLACE REQUIREMENTS AND LOBBYING
CD 512 (7/91)—CERTIFICATION REGARDING DEBARMENT, SUSPENSION, INELIGIBILITY AND VOLUNTARY EXCLUSION—LOWER TIER COVERED TRANSACTIONS AND LOBBYING
SF–LLL—DISCLOSURE OF LOBBYING ACTIVITIES
CD–346—APPLICANT FOR FUNDING ASSISTANCE

Paperwork Reduction Act

The Standard Form 424 and other Standard Forms in the application kit are subject to the requirements of the Paperwork Reduction Act and have been approved by OMB under Control No. 0348–0043, 0348–0044, 0348–0040, 0348–0046, and 0605–0001.

Notwithstanding any other provision of the law, no person is required to respond to, nor shall any person be subject to a penalty for failure to comply with a collection, subject to the requirements of the Paperwork Reduction Act, unless that collection of information displays a currently valid OMB Control Number.

Additional Requirements

Primary Application Certifications: All primary applicant institutions must submit a completed form CD–511, ''Certifications Regarding Debarment, Suspension and Other Responsibility Matters; Drug-Free Workplace Requirements and Lobbying'' and the following explanations must be provided:

1. *Nonprocurement Debarment and Suspension*. Prospective participants (as defined at 15 CFR part 26, section 105) are subject to 15 CFR part 26, ''Nonprocurement Debarment and Suspension'' and the related section of the certification form prescribed above applies;

2. *Drug-Free Workplace*. Grantees (as defined at 15 CFR part 26, section 605) are subject to 15 CFR part 26, subpart F, ''Government wide Requirements for Drug-Free Workplace (Grants)'' and the related section of the certification form prescribed above applies;

3. *Anti-Lobbying*. Persons (as defined at 15 CFR part 28, section 105) are subject to the lobbying provisions of 31 U.S.C. 1352, ''Limitation on use of appropriated funds to influence certain Federal contacting and financial transactions,'' and the lobbying section of the certification form prescribed above applies to applications/bids for grants, cooperative agreements, and contracts for more than $100,000, and loans and loan guarantees for more than $150,000, or the single family maximum mortgage limit for affected programs, whichever is greater.

4. *Anti-Lobbying Disclosure*. Any applicant institution that has paid or will pay for lobbying using any funds must submit an SF—LL, ''Disclosure of Lobbying Activities,'' as required under 15 CFR part 28, appendix B.

5. *Lower-Tier Certifications*. Recipients shall require applicant/bidder institutions for subgrants, contracts, subcontracts, or other lower tier covered transactions at any tier under the award to submit, if applicable, a completed Form CD–512, ''Certifications Regarding Debarment, Suspension, Ineligibility and Voluntary Exclusion—Lower Tier Covered Transactions and Lobbying'' and disclosure form, SF—LLL, ''Disclosure of Lobbying Activities.'' Form CD–512 is intended for the use of recipients and should not be transmitted to NIST. SF—LLL submitted by any tier recipient or subrecipient should be submitted to NIST in accordance with the instructions contained in the award document.

Name Check Reviews

All for-profit and non-profit applicants will be subject to a name check review process. Name checks are intended to reveal if any key individuals associated with the applicant have been convicted of or are presently facing, criminal charges such as fraud, theft, perjury, or other matters which significantly reflect on the applicant's management honesty or financial integrity. Form CD–346 must be completed for all personnel with key programmatic or fiduciary responsibilities.

Preaward Activities

Applicants (or their institutions) who incur any costs prior to an award being made do so solely at their own risk of not being reimbursed by the Government. Notwithstanding any verbal assurance that may have been provided, there is no obligation on the part of NIST to cover pre-award costs.

No Obligation for Future Funding

If an application is accepted for funding, DOC has no obligation to provide any additional future funding in connection with that award. Renewal of an award to increase funding or extend the period of performance is at the total discretion of NIST.

Past Performance

Unsatisfactory performance under prior Federal awards may result in an application not being considered for funding.

False Statements

A false statement on an application is grounds for denial or termination of funds, and grounds for possible punishment by a fine or imprisonment as provided in 18 U.S.C. 1001.

Delinquent Federal Debts

No award of Federal funds shall be made to an applicant who has an outstanding delinquent Federal debt until either:

1. The delinquent account is paid in full,

2. A negotiated repayment schedule is established and at least one payment is received, or

3. Other arrangements satisfactory to DoC are made.

Indirect Costs

Regardless of any approved indirect cost rate applicable to the award, the maximum dollar amount of allocable indirect costs for which the DoC will reimburse the Recipient shall be the lesser of:

(a) the Federal Share of the total allocable indirect costs of the award based on the negotiated rate with the cognizant Federal agency as established by audit or negotiation; or

(b) the line item amount for the Federal share of indirect costs contained in the approved budget of the award.

Purchase of American-Made Equipment and Products

Applicants are hereby notified that they are encouraged, to the greatest practicable extent, to purchase American-made equipment and products with funding provided under this program.

Federal Policies and Procedures

Recipients and subrecipients under each of the above grant programs shall be subject to all Federal laws and Federal and Departmental regulations, policies, and procedures applicable to financial assistance awards.

Each of the above grant programs does not directly affect any state or local government.

Applications under these programs are not subject to Executive Order

12372, ''Intergovernmental Review of Federal Programs.''

Executive Order Statement

This funding notice was determined to be ''not significant'' for purposes of Executive Order 12866.

Dated: May 22, 2000.

Karen H. Brown,

Deputy Director, NIST.

[FR Doc. 00–13299 Filed 5–25–00; 8:45 am]

BILLING CODE 3510–13–M

DEPARTMENT OF THE INTERIOR

Office of the Secretary

DEPARTMENT OF COMMERCE

National Oceanic and Atmospheric Administration

Solicitation of Public Comments on Establishing a Review Process for Mandatory Conditions Developed by the Departments of the Interior and Commerce in the Context of Hydropower Licensing

AGENCIES: Office of the Secretary, Interior; National Oceanic and Atmospheric Administration (NOAA), Commerce.

ACTION: Notice of solicitation of public comments.

SUMMARY: The Department of the Interior and the Department of Commerce (Departments) have committed to establishing a review process for the mandatory conditions and prescriptions the Departments develop as part of the Federal Energy Regulatory Commission's hydropower licensing proceedings under part I of the Federal Power Act. The Departments have convened a joint drafting committee to develop such a process and, with the input of the public and agency field staffs, will be exploring a variety of options in the coming months.

DATES: Comments must be submitted by June 26, 2000.

ADDRESSES: Please submit all comments to Liz Birnbaum, U.S. Department of the Interior, Solicitor's Office, MS–6352, 1849 C Street, NW 20240, or by email: <MARP@ios.doi.gov>.

FOR FURTHER INFORMATION CONTACT: Liz Birnbaum, U.S. Department of the Interior, 202–208–4423, or Stephen Waste, U.S. Department of Commerce, 301–713–2325, extension 182.

SUPPLEMENTARY INFORMATION:

Background

Pursuant to Part I of the Federal Power Act, 16 U.S.C. 791a *et seq.*, the Department of the Interior and Department of Commerce possess certain authorities in the process for licensing non-federal hydroelectric generating facilities. Although the final licensing decision lies with the Federal Energy Regulatory Commission (Commission), various bureaus of the Departments provide input to the Commission on a number of issues related to the license application. Among others, the Departments' authorities include the U.S. Fish and Wildlife Service's and National Marine Fisheries Service's authority to prescribe fishways under section 18 of the Federal Power Act, 16 U.S.C. 811, and the Secretary of the Interior's authority with respect to land ''reservations'' that may contain non-federal hydropower project works, to establish conditions ''necessary for the adequate protection and utilization of such reservations'' under section 4(e) of the Federal Power Act, 16 U.S.C. 797(e). These reservations may include lands managed principally by the U.S. Fish and Wildlife Service, the National Park Service, the Bureau of Land Management, the Bureau of Reclamation and the Bureau of Indian Affairs.

The Federal Power Act states that both section 18 prescriptions and section 4(e) conditions must be included in any license issued by the Commission. The mandatory nature of these prescriptions and conditions has been upheld by Federal courts, including the Supreme Court. *Escondido Mutual Water Co.* v. *La Jolla Band of Mission Indians*, 466 U.S. 765 (1984); *Bangor Hydroelectric Co.* v. *FERC*, 78 F.3d 659 (D.C. Cir. 1996); *American Rivers* v. *FERC*, 129 F.3d 99 (2d Cir. 1997); *American Rivers* v. *FERC*, 187 F.3d 1007 (9th Cir. 1999). After incorporation into a license, the prescriptions and conditions are subject to judicial review under the appeal procedures of the Federal Power Act, which places exclusive jurisdiction in the Federal courts of appeals (16 U.S.C. 8251(b)).

Currently, the Departments try to work closely with the license applicant in developing mandatory prescriptions and conditions. However, the Departments understand the interest of licensees and others in having a more formal opportunity to provide input on the Departments' mandatory conditions before FERC issues a license. Such a review process mechanism would provide an opportunity for the Departments and interested parties to work together to improve prescriptions and conditions in advance of license issuance. While it is generally thought that this process would only be appropriate in a traditional process licensing, the Departments will also evaluate whether such a mechanism should be available for prescriptions and conditions developed during negotiations under the Commission's alternative licensing procedure, or other settlement negotiations.

Before the Departments can establish a review process, a number of issues must be considered and addressed. The Departments do not wish to institute a review process that causes significant delays in developing prescriptions and conditions, or creates unnecessary procedural burdens on the Commission, licensees, or on to balance the need to obtain timely, meaningful input with their legal obligation to support conditions and prescriptions with substantial evidence in the record. Furthermore, in consideration of increasingly significant resource constraints, the Departments must adopt a procedure that is not too burdensome.

Timing will be a particularly important consideration in establishing a review process. While the Departments often have an opportunity to review and comment on draft hydropower licensing applications before the applications are due, they typically do not see the final license application until it is submitted to the Commission. The Departments therefore have very little time to analyze the application and develop appropriate prescriptions and conditions. In addition, they often must wait to receive additional environmental information before being able to develop section 18 prescriptions or Section 4(e) conditions. Commission rules ask that the Departments submit prescriptions and conditions within 60 days after the Commission determines that the application is complete and ready for environmental review. Where there is sufficient information to support a preliminary prescription or condition, the Departments normally take this time to develop prescriptions and conditions that address the application as written, leaving little time for any kind of review process. Once the prescriptions and conditions have bean submitted, the Commission's regulations provide a narrow 45-day comment period for public comments. Therefore, in developing a review process, the Departments must consider whether to delay their submissions to the Commission in order to accommodate the new process, use the time period already contemplated under the Commission's regulations, or take otherstreps to integrate this new process into the licensing procedure.

Issues To Be Addressed

Based on the cited considerations, the Departments are seeking public comment on the following questions:

1. Should a review process be adopted and, if so, what kind of process should be established?

2. If so, how could such a process be integrated into the Commission's current licensing procedures in a timely and efficient manner? To meet the constraints of timeliness and resource limitations, are changes needed in the timing or implementation of various steps in the agencies'—including the Commission's—existing regulations or procedures? If not, then when should the review process take place?

3. If, under any review process mechanism, it were not possible to avoid delaying the overall licensing process, would it still be worth establishing such a process?

4. Should the review process for Section 4(e) and Section 18 be the same?

5. Who should be allowed to initiate and/or participate in the review process? Should it be limited to the license applicant? Should it be limited to formal parties (*i.e.*, intervenors) to the Commission's licensing process (note that, depending upon when the review process takes place, there may not yet be intervenors before the Commission)? Should the opportunity be available to anyone with an interest in the project?

6. Should the new process be available for prescriptions and conditions agreed upon pursuant to the Commission's streamlined alternative licensing procedure—a process that already provides considerable opportunity for communication and negotiation among the Departments and other interested parties?

Alex Matthiessen,

Special Assistant to the Deputy Secretary, U.S. Department of the Interior.

Andrew Rosenberg,

Acting Assistant Administrator for Fisheries, National Marine Fisheries Service, National Oceanic and Atmospheric Administration, Department of Commerce.

[FR Doc. 00–13265 Filed 5–25–00; 8:45 am]

BILLING CODE 4310–10–P

DEPARTMENT OF DEFENSE

Office of the Secretary

Submission for OMB Review; Comment Request

ACTION: Notice.

The Department of Defense has submitted to OMB for clearance, the following proposal for collection of information under the provisions of the Paperwork Reduction Act (44 U.S.C. chapter 35).

Title and OMB Number: Defense Federal Acquisition Regulation Supplement (DFARS) Appendix I, DoD Pilot Mentor Protege Program Improvements; OMB Number 0704–0412.

Type of Request: Extension.

Number of Respondents: 145.

Responses per Respondent: 1.

Annual Responses: 145.

Average Burden per Response: 3 hours.

Annual Burden Hours: 435 (145 reporting hours and 290 recordkeeping hours).

Needs and Uses: The new information collection required by Appendix I, Policy and Procedures for the DoD Pilot Mentor-Protege Program, is required by section 811 of the National Defense Authorization Act for Fiscal Year 2000 (Public Law 106–65). DoD will use the information to assess whether the purposes of the Pilot Mentor-Protege Program have been attained and to prepare the reports to Congress required by section 811 of Public Law 106–65. DFARS Appendix I requires a protege firm to report on its progress under a mentor-protege agreement by concurring with or rebutting its mentor firm's year-end report. The protege firm also must provide data on its employment, revenues, and participation in Dod contracts. The report is required annually during the protege firm's program participation term and for two fiscal years after the expiration of the program participation term.

Affected Public: Business or Other For-Profit.

Frequency: Annually.

Respondent's Obligation: Required to Obtain or Retain Benefits.

OMB Desk Officer: Mr. Lewis W. Oleinick.

Written comments and recommendations on the proposed information collection should be sent to Mr. Oleinick at the Office of Management and Budget, Desk Officer for DoD (Acquisition), Room 10236, New Executive Office Building, Washington, DC 20503.

DOD Clearance Officer: Mr. Robert Cushing.

Written requests for copies of the information collection proposal should be sent to Mr. Cushing, WHS/DIOR, 1215 Jefferson Davis Highway, Suite 1204, Arlington, VA 22202–4302.

Dated: May 22, 2000.

Patricia L. Toppings,

Alternate OSD Federal Register Liaison Officer, Department of Defense,

[FR Doc. 00–13286 Filed 5–25–00; 8:45 am]

BILLING CODE 5001–10–M

DEPARTMENT OF DEFENSE

Office of the Secretary

Submission for OMB Review; Comment Request

ACTION: Notice.

The Department of Defense has submitted to OMB for clearance, the following proposal for collection of information under the provisions of the Paperwork Reduction Act (44 U.S.C. chapter 35).

Title, Form Number, and OMB Number: Pentagon Reservation Parking Permit Application; DD Form 1199; OMB Number 0704–0395.

Type of Request: Extension.

Number of Respondents: 10,000.

Responses per Respondent: 1.

Annual Responses: 10,000.

Average Burden per Response: 5 minutes.

Annual Burden Hours: 833.

Needs and Uses: The information collection requirement is necessary for the administration and management of the Pentagon's parking control program, which is designed to meet the government mandated car pool program. Respondents are Department of Defense and non-DoD personnel who utilize designated parking areas on the Pentagon Reservation. The Pentagon Reservation Parking Permit Application, DD Form 1199, is a machine read form that includes information, such as name, rank or grade, Social Security Number (SSN), and vehicle license plate number, required for the issuance and control of the parking permit. The DD Form 1199 is scanned into a computerized database designed for the administration of the Pentagon's parking control program. Each member of a Pentagon Reservation authorized car pool or individual parking permit holder is required to complete and submit the DD Form 1199 upon initial application and annually thereafter.

Affected Public: Individuals or Households.

Frequency: On Occasion; Annually.

Respondent's Obligation: Required to Obtain or Retain Benefits.

OMB Desk Officer: Mr. Edward C. Springer.

Written comments and recommendations on the proposed information collection should be sent to

Mr. Springer at the Office of Management and Budget, Desk Officer for DoD, Room 10236, New Executive Office Building, Washington, DC 20503.

DOD Clearance Officer: Mr. Robert Cushing.

Written requests for copies of the information collection proposal should be sent to Mr. Cushing, WHS/DIOR, 1215 Jefferson Davis Highway, Suite 1204, Arlington, VA 22202–4302.

Dated: May 22, 2000.

Patricia L. Toppings,

Alternate OSD Federal Register Liaison Officer, Department of Defense.

[FR Doc. 00–13287 Filed 5–25–00; 8:45 am]

BILLING CODE 5001–10–M

DEPARTMENT OF DEFENSE

Office of the Secretary

Submission for OMB Review; Comment Request

ACTION: Notice.

The Department of Defense has submitted to OMB for clearance, the following proposal for collection of information under the provisions of the Paperwork Reduction Act (44 U.S.C. chapter 35).

Title, Form Number, and OMB Number: Medical Screening of Military Personnel; DD Forms 2807–1, 2807–2; OMB Number 0704–[To Be Determined].

Type of Request: New Collection.

Number of Respondents: 850,000.

Responses per Respondent: 1.

Annual Responses: 850,000.

Average Burden per Response: 9.6 minutes.

Annual Burden Hours: 135,833.

Needs and Uses: Title 10 USC 504, 505, 507, 532, 978, 1201, 1202, and 4346, require military applicants to meet medical accession standards for enlistment, induction, and appointment to the Armed Forces. This information collection is the basis for determining medical eligibility of applicants based upon their current and past medical history. The General Accounting Office report, ''Military Attrition—DoD Could Save Millions by Better Screening Enlisted Personnel,'' dated January 1997, instructed the Department of Defense to develop a better method for medically screening military applicants. As a result, the DD Form 2807–1, ''Report of Medical History'' and the DD Form 2807–2, ''Medical Prescreen of Medical History Report,'' will be the forms used to collect the necessary data needed from the military applicants to elicit a more accurate picture of their well being and medical history. The information obtained on the DD Form 2807–2 will also identify any medical disqualifying condition(s) prior to the application process and meets the Congressional requirements to obtain the applicant's health care provider and insurance provider.

Affected Public Individuals or Households; Not-For-Profit Institutions.

Frequency: On Occasion.

Respondent's Obligation: Voluntary.

OMB Desk Officer: Mr. Edward C. Springer.

Written comments and recommendations on the proposed information collection should be sent to Mr. Springer at the Office of Management and Budget, Desk Officer for DoD, Room 10236, New Executive Office Building, Washington, DC 20503.

DOD Clearance Officer: Mr. Robert Cushing.

Written requests for copies of the information collection proposal should be sent to Mr. Cushing, WHS/DIOR, 1215 Jefferson Davis Highway, Suite 1204, Arlington, VA 22202–4302.

Dated: May 22, 2000.

Patricia L. Toppings,

Alternate OSD Federal Register Liaison Officer, Department of Defense.

[FR Doc. 00–13288 Filed 5–25–00; 8:45 am]

BILLING CODE 5001–10–M

DEPARTMENT OF DEFENSE

Department of the Air Force

Notice of Intent To Prepare an Environmental Impact Statement; Airfield Repairs, Landing Systems Improvements, and Adjustments to Aircrew Training at Altus Air Force Base, Oklahoma

The United States Air Force intends to prepare an Environmental Impact Statement (EIS) to evaluate potential environmental impacts of the following proposed actions at the 97th Air Mobility Wing, Altus Air Force Base, Oklahoma:

- Repair of the west runway (Runway 17 Right/35 Left) and associated taxiways;
- Installation of an Instrument Landing System (ILS) for the east runway (Runway 17 Left/35 Right) and a Microwave Landing System (MLS) on the assault landing strip;
- Increase C–17 and KC–135 training while phasing out C–141 aircrew training and reducing C–5 training.

Deterioration of airfield pavements over the years has increased the potential for loose material damage to the aircraft that use the west runway and associated taxiways. During the nearly three-year phased runway repair program, some increased use of the east runway would be necessary. During an approximate four-month period, the west runway would be closed and the east runway would be used for all essential aircraft operations.

An instrument approach is a series of predetermined maneuvers for the orderly transfer of an aircraft from the beginning of the initial approach to a landing, or to a point from which a landing may be made visually or a missed approach is executed. Currently, Altus AFB has ILS approaches only to each end of the west runway. ILS equipment transmits information to aircraft to guide the aircraft to the runway. This ILS approach capability would be lost during the repair phase when the west runway would be closed. Thus, installing ILS equipment on the east runway before the west runway is closed for repair would allow continued ILS approach training at Altus AFB. Over the long-term, the increased availability of ILS approaches on both runways, as opposed to only the west runway, would improve aircrew training efficiency at the base. Aircrews currently use simulators for MLS approaches since the base does not have MLS equipment on the airfield. MLS approach capability to the assault landing strip would allow aircrews to perform MLS approaches in the C–17 aircraft. This equipment would also complement simulator training.

As C–141 aircraft are phased out of the Air Force inventory, the Air Force's need for C–17 and KC–135 aircrew training will increase and need for C–5 aircrew training will decrease from levels previously forecast and environmentally assessed. The net effect will be an increased need for flying training at Altus AFB. Altus AFB aircrews would continue using Clinton-Sherman Industrial Airpark, Burns Flat, Oklahoma, for practice approaches, takeoffs, landings, and closed patterns.

In addition to the Proposed Action, the EIS will evaluate the potential environmental impacts of alternatives. One alternative is identical to the Proposed Action except that C–5 aircraft operations at the base would be reduced during the period when the west runway is closed. A second alternative is identical to the Proposed Action except that KC–135 aircraft operations at the base would be reduced during the period when the west runway is closed. These two alternatives would result in increased operations at Clinton-Sherman Industrial Airpark during the period of runway repair. The flying training adjustments identified for the

Proposed Action would occur under a third alternative; however, the runway repair and landing systems installations would not occur. A fourth alternative would be the same as the Proposed Action except that the C–141 aircraft would not be phased out. Therefore, this alternative would include C–141 aircraft operations. The EIS will also evaluate the No Action alternative.

The EIS is being prepared in compliance with the National Environmental Policy Act. The Air Force invites government agency representatives and members of the community to hear a presentation on the proposal and to identify environmental issues to be analyzed in the EIS that will be used in the decision-making process.

A public scoping meeting on the proposal will be held Tuesday, June 13, 2000. An Open House will be held at 6:30 p.m. The meeting begins at 7:30 p.m. in Herschel H. Crow Auditorium, Western Oklahoma State College, 2801 N. Main, Altus, Oklahoma.

Comments on this proposed action may be sent (postmarked by June 30, 2000) to Linda C. Stokes, 97 AMW/PA, 100 Inez Blvd., Suite 2, Altus AFB, OK 73523–5047. Ms. Stokes can be reached at (580) 481–7229 or by facsimile at (580) 481–5966.

Janet A. Long,

Air Force Federal Register Liaison Officer.

[FR Doc. 00–13305 Filed 5–25–00; 8:45 am]

BILLING CODE 5001–05–P

DEPARTMENT OF EDUCATION

[CFDA No. 84.295A]

Office of Educational Research and Improvement (OERI); Ready-To-Learn (RTL) Television Program

Notice of selection criteria and extension of deadline for transmittal of applications for a new award for fiscal year (FY) 2000.

SUMMARY: On May 3, 2000, we published in the **Federal Register** (65 FR 25815–25817) a notice inviting applications for a new award for FY 2000 for the RTL Television Program. This notice explains the Selection Criteria that the Secretary will use to evaluate your application.

Note: This notice also extends the deadline for transmittal of applications as follows:

Deadline for Transmittal of Applications: June 26, 2000.

Selection Criteria: The Secretary uses the following selection criteria in 34 CFR 700.30 to evaluate applications for new grants under this competition.

The maximum score for all of these criteria is 100 points.

The maximum score for each criterion is indicated in parentheses.

(a) *National significance* (30 points). The Secretary considers the national significance of the proposed project. In determining the national significance of the proposed project, the Secretary considers the following factors:

(1) The importance of the problem or issue to be addressed.

(2) The nature of the products (such as information, materials, processes, or techniques) likely to result from the project and the potential for their effective use in a variety of other settings.

(3) The extent and quality of plans for disseminating results in ways that will allow others to use the information.

(b) *Quality of the project design* (30 points). The Secretary considers the quality of the design of the proposed project. In determining the quality of the design of the proposed project, the Secretary considers the following factors:

(1) The extent to which the research design includes a thorough, high-quality review of the relevant literature, a high-quality plan for research activities, and the use of appropriate theoretical and methodological tools, including those of a variety of disciplines, where appropriate.

(2) The quality of the plan for evaluating the functioning and impact of the project, including the objectivity of the evaluation and the extent to which the methods of evaluation are appropriate to the goals, objectives, and outcomes of the project.

(3) The quality of the demonstration design and procedures for documenting project activities and results.

(4) The likelihood that the design of the project will successfully address the intended, demonstrated educational need or needs.

(5) How well and innovatively the project addresses statutory purposes, requirements, and any priority or priorities announced for the program.

(c) *Quality and potential contributions of personnel* (10 points). The Secretary considers the quality and potential contributions of personnel for the proposed project. In determining the quality and potential contributions of personnel for the proposed project, the Secretary considers the following factors:

(1) The qualifications, including training and experience, of the project director or principal investigator.

(2) The qualifications, including training and experience, of key project personnel.

(3) The qualifications, including training and experience, of proposed consultants or subcontractors.

(d) *Adequacy of resources* (10 points). The Secretary considers the adequacy of resources for the proposed project. In determining the adequacy of resources for the proposed project, the Secretary considers the following factors:

(1) The adequacy of support from the lead applicant organization.

(2) The relevance and commitment of each partner in the project to the implementation and success of the project.

(3) Whether the budget is adequate to support the project.

(e) *Quality of the management plan* (20 points). The Secretary considers the quality of the management plan of the proposed project. In determining the quality of the management plan of the proposed project, the Secretary considers the following factors:

(1) The adequacy of the management plan to achieve the objectives of the project, including the specification of staff responsibility, timelines, and benchmarks for accomplishing project tasks.

(2) The adequacy of plans for ensuring high-quality products and services.

(3) The adequacy of plans for ensuring continuous improvement in the operation of the project.

(4) How the applicant will ensure that a diversity of perspectives are brought to bear in the operation of the project, including those of parents and teachers, where appropriate.

FOR FURTHER INFORMATION CONTACT: Joe Caliguro, U.S. Department of Education, 555 New Jersey Avenue, NW., room 604–I, Washington, DC 20202–5520. Telephone: (202) 219–1596. If you use a telecommunications device for the deaf (TDD), you may call the Federal Information Relay Service (FIRS) at 1–800–877–8339.

Individuals with disabilities may obtain this document in an alternative format (*e.g.,* Braille, large print, audiotape, or computer diskette) on request to the program contact person listed in the previous paragraph.

Electronic Access to This Document

You may view this document, as well as all other Department of Education documents published in the **Federal Register**, in text or Adobe Portable Document Format (PDF) on the Internet at either of the following sites:

http://ocfo.ed.gov/fedreg.htm

http://www.ed.gov/news.html

To use the PDF you must have the Adobe Acrobat Reader, which is available free at either of the previous sites. If you have questions about using

the PDF, call the U.S. Government Printing Office (GPO), toll free, at 1–888–293–6498; or in the Washington, DC area at (202) 512–1530.

Note: The official version of this document is the document published in the **Federal Register**. Free Internet access to the official edition of the **Federal Register** and the Code of Federal Regulations is available on GPO Access at: http://www.access.gpo.gov/nara/index.html

Program Authority: 20 U.S.C. 6921–6928.

Dated: May 23, 2000.

C. Kent McGuire,

Assistant Secretary for Educational Research and Improvement.

[FR Doc. 00–13302 Filed 5–25–00; 8:45 am]

BILLING CODE 4000–01–P

DEPARTMENT OF ENERGY

National Nuclear Security Administration; Rescheduling of Scoping Meeting for the Proposed Relocation of the Los Alamos National Laboratory Technical Area 18 Missions

AGENCY: Department of Energy, National Nuclear Security Administration.

ACTION: Rescheduling of scoping meeting.

SUMMARY: On May 2, 2000, the Department of Energy (DOE) announced in the **Federal Register**, 65 FR 25472), that it would hold scoping meetings for the proposal to relocate missions at Technical Area 18 (TA–18). Due to the fire in the Los Alamos, New Mexico area, DOE announced in the **Federal Register** that the Los Alamos scoping meeting scheduled for May 17, 2000 was postponed (65 FR 31536). DOE has now rescheduled the Los Alamos scoping meeting for May 30th, 7–10 p.m. at the Northern New Mexico Community College, 921 Paseo de Onate, Espanola, New Mexico 87532. DOE regrets any inconvenience for this postponement. DOE is also announcing that the scoping period, originally scheduled to end on June 1, 2000, has been extended until June 15, 2000. Any questions associated with the TA–18 Project can be asked by calling Mr. Jay Rose at 1–800–832–0885, ext. 65484.

Issued in Washington, D.C., this 22nd day of May 2000.

Henry Garson,

NEPA Compliance Officer, Office of Defense Programs, Department of Energy.

[FR Doc. 00–13262 Filed 5–25–00; 8:45 am]

BILLING CODE 6450–01–P

DEPARTMENT OF ENERGY

Environmental Management Site-Specific Advisory Board, Paducah

AGENCY: Department of Energy (DOE).

ACTION: Notice of open meeting.

SUMMARY: This notice announces a meeting of the Environmental Management Site-Specific Advisory Board (EM SSAB), Paducah. The Federal Advisory Committee Act (Pub. L. 92–463, 86 Stat. 770) requires that public notice of these meetings be announced in the **Federal Register**.

DATES: Thursday, June 1, 2000: 6:30 p.m.–8:30 p.m.

ADDRESSES: Paducah Information Age Park Resource Center, 2000 McCracken Boulevard, Paducah, Kentucky.

FOR FURTHER INFORMATION CONTACT: John D. Sheppard, Site-Specific Advisory Board Coordinator, Department of Energy Paducah Site Office, Post Office Box 1410, MS–103, Paducah, Kentucky 42001, (270) 441–6804.

SUPPLEMENTARY INFORMATION:

Purpose of the Board: The purpose of the Board is to make recommendations to DOE and its regulators in the areas of environmental restoration and waste management activities.

Tentative Agenda: 6:30 p.m.
Call to order
Project briefing
SSAB discussion
Public discussion
8:30 p.m.
Adjourn

Public Participation: The meeting is open to the public. Written statements may be filed with the Committee either before or after the meeting. Individuals who wish to make oral statements pertaining to agenda items should contact John D. Sheppard at the address or telephone number listed above. The Deputy Designated Federal Officer is empowered to conduct the meeting in a fashion that will facilitate the orderly conduct of business. Each individual wishing to make public comment will be provided a maximum of 5 minutes to present their comments at the end of the meeting. This notice is being published less than 15 days in advance of the meeting because during their regular monthly meeting on May 18, 2000, the SSAB, Paducah, determined that an additional review of the Drum Mountain Project was important for the final assessment of environmental monitoring consideration prior to operation to take place in early June. Consequently, a special meeting of the Board was requested by the Board. Public notice of this special SSAB, Paduach, meeting was published in the local newspaper during the weekend edition of May 20–21, 2000.

Minutes: The minutes of this meeting will be available for public review and copying at the Freedom of Information Public Reading Room, 1E–190, Forrestal Building, 1000 Independence Avenue, SW, Washington, DC 20585 between 9 a.m. and 4 p.m., Monday–Friday, except Federal holidays. Minutes will also be available at the Department of Energy's Environmental Information Center and Reading Room at 175 Freedom Boulevard, Highway 60, Kevil, Kentucky between 8 a.m. and 5 p.m. on Monday thru Friday or by writing to John D. Sheppard, Department of Energy Paducah Site Office, Post Office Box 1410, MS–103, Paducah, Kentucky 42001 or by calling him at (270) 441–6804.

Issued at Washington, DC on May 22, 2000.

Rachel M. Samuel,

Deputy Advisory Committee Management Officer.

[FR Doc. 00–13263 Filed 5–25–00; 8:45 am]

BILLING CODE 6450–01–P

DEPARTMENT OF ENERGY

Environmental Management Site-Specific Advisory Board, Paducah

AGENCY: Department of Energy (DOE)

ACTION: Notice of open meeting.

SUMMARY: This notice announces a meeting of the Environmental Management Site-Specific Advisory Board (EM SSAB), Paducah. The Federal Advisory Committee Act (Pub. L. No. 92–463, 86 Stat. 770) requires that public notice of these meetings be announced in the **Federal Register**.

DATES: Thursday, June 15, 2000: 5:30 p.m.—8:30 p.m.

ADDRESSES: Paducah Information Age Park Resource Center, 2000 McCracken Boulevard, Paducah, Kentucky.

FOR FURTHER INFORMATION CONTACT: John D. Sheppard, Site Specific Advisory Board Coordinator, Department of Energy Paducah Site Office, Post Office Box 1410, MS–103, Paducah, Kentucky 42001, (270) 441–6804.

SUPPLEMENTARY INFORMATION:

Purpose of the Board: The purpose of the Board is to make recommendations to DOE and its regulators in the areas of environmental restoration and waste management activities.

Tentative Agenda:
5:30 p.m. Informal Discussion
6:00 p.m. Call to Order
6:10 p.m. Approve Minutes
6:20 p.m. Presentations/Board Response/Public Comments

7:20 p.m. Sub Committee Reports/ Board Response/Public Comment
8:15 p.m. Administrative Issues
8:30 p.m. Adjourn

Public Participation: The meeting is open to the public. Written statements may be filed with the Committee either before or after the meeting. Individuals who wish to make oral statements pertaining to agenda items should contact John D. Sheppard at the address or telephone number listed above. Requests must be received 5 days prior to the meeting and reasonable provision will be made to include the presentation in the agenda. The Deputy Designated Federal Officer is empowered to conduct the meeting in a fashion that will facilitate the orderly conduct of business. Each individual wishing to make public comment will be provided a maximum of 5 minutes to present their comments at the end of the meeting.

Minutes: The minutes of this meeting will be available for public review and copying at the Freedom of Information Public Reading Room, 1E–190, Forrestal Building, 1000 Independence Avenue, SW, Washington, DC 20585 between 9 a.m. and 4 p.m., Monday—Friday, except Federal holidays. Minutes will also be available at the Department of Energy's Environmental Information Center and Reading Room at 175 Freedom Boulevard, Highway 60, Kevil, Kentucky between 8:00 a.m. and 5:00 p.m. on Monday thru Friday or by writing to John D. Sheppard, Department of Energy Paducah Site Office, Post Office Box 1410, MS–103, Paducah, Kentucky 42001 or by calling him at (270) 441–6804.

Issued at Washington, DC on May 22, 2000.

Rachel M. Samuel,

Deputy Advisory Committee Management Officer.

[FR Doc. 00–13264 Filed 5–25–00; 8:45 am]

BILLING CODE 6450–01–P

DEPARTMENT OF ENERGY

Office of Fossil Energy; National Petroleum Council

AGENCY: Department of Energy.

ACTION: Notice of open meeting.

SUMMARY: This notice announces a meeting of the National Petroleum Council. Federal Advisory Committee Act (Public Law 92–463, 86 Stat. 770) requires notice of these meetings be announced in the **Federal Register**.

DATES: Tuesday, June 20, 2000, 9 AM.

ADDRESSES: The St. Regis Hotel, Crystal Ballroom, 923 16th & K Streets, NW, Washington, DC.

FOR FURTHER INFORMATION CONTACT: Margie D. Biggerstaff, U.S. Department of Energy, Office of Fossil Energy, Washington, DC 20585. Phone: 202/586–3867.

SUPPLEMENTARY INFORMATION: *Purpose of the Committee:* To provide advice, information, and recommendations to the Secretary of Energy on matters relating to oil and gas or the oil and gas industry.

Tentative Agenda:

—Call to order and introductory remarks by Archie W. Dunham, Chair of the NPC.

—Remarks by the Honorable Bill Richardson, Secretary of Energy (invited).

—Consideration of the proposed final report of the NPC Committee on Refining.

—Progress Report of the NPC Committee on Critical Infrastructure Protection.

—Administrative matters.

—Discussion of any other business properly brought before the NPC.

—Public comment (10-minute rule).

—Adjournment.

Public Participation: The meeting is open to the public. The chairperson of the Council is empowered to conduct the meeting in a fashion that will facilitate the orderly conduct of business. Any member of the public who wishes to file a written statement with the Council will be permitted to do so, either before or after the meeting. Members of the public who wish to make oral statements pertaining to agenda items should contact Margie D. Biggerstaff at the address or telephone number listed above. Requests must be received at least five days prior to the meeting and reasonable provision will be made to include the presentation on the agenda.

Transcripts: Available for public review and copying at the Public Reading Room, Room IE–190, Forrestal Building, 1000 Independence Avenue, S.W., Washington, D.C., between 9 AM and 4 PM, Monday through Friday, except Federal holidays.

Issued at Washington, D.C., on May 23, 2000.

Rachel M. Samuel,

Deputy Committee Advisory Management Officer.

[FR Doc. 00–13261 Filed 5–25–00; 8:45 am]

BILLING CODE 6450–01–P

DEPARTMENT OF ENERGY

Federal Energy Regulatory Commission

[Docket Nos. ER00–2251–001, ER97–705–012, ER98–2491–007 and ER99–2251–001]

Consolidated Edison Company of New York, Inc., Consolidated Edison Solutions, Inc., Consolidated Edison Energy, Inc. and Orange and Rockland Utilities, Inc.; Notice of Filing

May 22, 2000.

Take notice that on May 5, 2000, Consolidated Edison Company of New York, Inc. (Con Edison), on behalf of itself and its affiliates Consolidated Edison Solutions, Inc., Consolidated Edison Energy, Inc., and Orange and Rockland Utilities, Inc. submitted an updated market power analysis.

Con Edison states that a copy of the filing was served on the New York Public Service Commission.

Any person desiring to be heard or to protest such filing should file a motion to intervene or protest with the Federal Energy Regulatory Commission, 888 First Street, NE., Washington, DC 20426, in accordance with Rules 211 and 214 of the Commission's Rules of Practice and Procedure (18 CFR 385.211 and 385.214). All such motions and protests should be filed on or before June 1, 2000. Protests will be considered by the Commission to determine the appropriate action to be taken, but will not serve to make protestants parties to the proceedings. Any person wishing to become a party must file a motion to intervene. Copies of this filing are on file with the Commission and are available for public inspection. This filing may also be viewed on the Internet at http://www.ferc.fed.us/online/rims.htm (call 202–208–2222 for assistance).

Linwood A. Watson, Jr.,

Acting Secretary.

[FR Doc. 00–13228 Filed 5–25–00; 8:45 am]

BILLING CODE 6717–01–M

DEPARTMENT OF ENERGY

Federal Energy Regulatory Commission

[Docket No. MG00–8–000]

Egan Hum Partners, L.P.; Notice of Filing

May 22, 2000.

Take notice that on April 18, 2000, Egan Hum Partners, L.P. made a standards of conduct filing under Part 161 of the Commission's regulations, 18

CFR 161, and Order Nos. 497 *et seq.*,[1] Order Nos. 566 *et seq.*,[2] and Order No. 599.[3]

Egan Hum states that it has served copies of this filing on its customers and on the regulatory agency of the state of Louisiana.

Any person desiring to be heard or to protest such filing should file a motion to intervene or protest with the Federal Energy Regulatory Commission, 888 First Street, NE, Washington, D.C. 20426, in accordance with Rules 211 or 214 of the Commission's Rules of Practice and Procedure (18 CFR 385.211 or 385.214). All such motions to intervene or protest should be filed on or before June 6, 2000. Protests will be considered by the Commission in determining the appropriate action to be taken but will not serve to make protestants parties to the proceeding. Any person wishing to become a party must file a motion to intervene. Copies of this filing are on file with the Commission and are available for public inspection. This filing may be viewed on the web at *http://www.ferc.fed.us/online/rims.htm* (call 202–208–2222 for assistance).

Linwood A. Watson, Jr.,

Acting Secretary.

[FR Doc. 00–13227 Filed 5–25–00; 8:45 am]

BILLING CODE 6717–01–M

[1] Order No. 497, 53 FR 22139 (June 14, 1988), FERC Stats. & Regs. 1986–1990 ¶ 30,820 (1988); Order No. 497–A, *order on rehearing,* 54 FR 52781 (December 22, 1989), FERC Stats. & Regs. 1986–1990 ¶ 30,868 (1989); Order No. 497–B, *order extending sunset date,* 55 FR 53291 (December 28, 1990), FERC Stats. & Regs. 1986–1990 ¶ 30,908 (1990); Order No. 497–C, *order extending sunset date,* 57 FR 9 (January 2, 1992), FERC Stats. & Regs. 1991–1996 ¶ 30,934 (1991), *rehearing denied,* 57 FR 5815 (February 18, 1992), 58 FERC ¶ 61,139 (1992); Tenneco Gas v. FERC (affirmed in part and remanded in part), 969 F.2d 1187 (D.C. Cir. 1992); Order No. 497–D, *order on remand and extending sunset date,* 57 FR 58978 (December 14, 1992), FERC Stats. & Regs. 1991–1996 ¶ 30,958 (December 4, 1992); Order No. 497–E, *order on rehearing and extending sunset date,* 59 FR 243 (January 4, 1994), FERC Stats. & Regs. 1991–1996 ¶ 30,987 (December 23, 1993); Order No. 497–F, *order denying rehearing and granting clarification,* 59 FR 15336 (April 1, 1994), 66 FERC ¶ 61,347 (March 24, 1994); and Order No. 497–G, *order extending sunset date,* 59 FR 32884 (June 27, 1994), FERC Stats. & Regs. 1991–1996 ¶ 30,996 (June 17, 1994).

[2] Standards of Conduct and Reporting Requirements for Transportation and Affiliate Transactions, Order No. 566, 59 FR 32885 (June 27, 1994), FERC Stats. & Regs. 1991–1996 ¶ 30,997 (June 17, 1994); Order No. 566–A, *order on rehearing,* 59 FR 52896 (October 20, 1994), 69 FERC ¶ 61,044 (October 14, 1994); Order No. 566–B, *order on rehearing,* 59 FR 65707, (December 21, 1994), 69 FERC ¶ 61,334 (December 14, 1994)

[3] Reporting Interstate Natural Gas Pipeline Marketing Affiliates on the Internet, Order No. 599, 63 FR 43075 (August 12, 1998), FERC Stats. & Regs. 31,064 (1998).

DEPARTMENT OF ENERGY

Federal Energy Regulatory Commission

[Docket No. RP00–287–000]

Great Lakes Gas Transmission Limited Partnership and Ocean Energy Resources, Inc.; Notice of Petition for Declaratory Order

May 22, 2000.

Take notice that on May 18, 2000, Great Lakes Gas Transmission Limited Partnership (Great Lakes) and Ocean Energy Resources, Inc. (Ocean) (jointly the parties) pursuant to Rule 207 of the Rules of Practice and Procedure, 18 CFR 385.207, of the Federal Energy Regulatory Commission, tendered for filing a Request for Declaratory order concerning application of Great Lakes' right of First Refusal procedures.

The parties jointly request that the Commission declare whether the ''primary term'' of the 6–19–98 FT254 shall be determined by reference to the contract date stated in Section 1 and the effective date stated in Section 7, or by reference to the term of service stated in Section 6.

Great Lakes and Ocean ask the Commission to identify the ''primary terms'' of Service Agreement FT254, for purposes of determining whether Section 16(a) or 16(b) of the Right of First Refusal procedures of Great Lakes' FERC Gas Tariff, Second Revised Volume No. 1, should apply. The parties respectfully request the Commission to issue a final Declaratory Order prior to the July 31, 2000 closing date of the Open Season for the 6–19–98 FTS254 capacity now posted on Great Lakes' Electronic Bulletin Board, so that neither Ocean nor any bidder may be harmed by the outcome of these proceedings.

Any person desiring to be heard or to protest said filing should file a motion to intervene or a protest with the Federal Energy Regulatory Commission, 888 First Street, N.E., Washington, D.C. 20426, in accordance with Sections 385.214 or 385.211 of the Commission's Rules and Regulations. All such motions or protests must be filed on or before June 19, 2000. Protests will be considered by the Commission in determining the appropriate action to be taken, but will not serve to make protestants parties to the proceedings. Any person wishing to become a party must file a motion to intervene. Copies of this filing are on file with the Commission and are available for public inspection in the Public Reference Room. This filing may be viewed on the web at http://www.ferc.fed.us/online/rims.htm (call 202–208–2222 for assistance).

Linwood A. Watson, Jr.

Acting Secretary.

[FR Doc. 00–13229 Filed 5–25–00; 8:45 am]

BILLING CODE 6717–01–M

DEPARTMENT OF ENERGY

Federal Energy Regulatory Commission

[Docket No. EL00–79–000]

Mid-Tex G&T Electric Cooperative, Inc., et al., Complainants. v. West Texas Utilities Company, Respondent; Notice of Complaint

May 22, 2000.

Take notice that on May 19, 2000, Mid-Tex G&T Electric Cooperative, Inc. (''Mid-Tex'') and its member cooperatives filed a Complaint and Request for Refund of Fuel Adjustment Clause Charges against West Texas Utilities Company (''WTU''). Mid-Tex requests that the Commission issue an order finding that (A) the inclusion of emergency or replacement power costs in fuel cost adjustments violates the terms of the TWU wholesale rate schedules applicable to the Complainants and the provisions of the Commission's fuel clause regulations, (B) Directing WTU to (i) recalculate the fuel factor for any month where emergency or replacement power costs were included in the fuel adjustment calculation and (ii) refund to the Complainants, with interest, all fuel clause overcharges; and (C) Ordering WTU to cease and desist from including emergency or replacement power costs in its fuel clause calculations in the future and to comply with the requirements of its wholesale rates schedules and the Commission's fuel clause regulations.

Any person desiring to be heard or to protest this filing should file a motion to intervene or protest with the Federal Energy Regulatory Commission, 888 First Street, N.E., Washington, D.C. 20426, in accordance with Rules 211 and 214 of the Commission's Rules of Practice and Procedure (18 CFR 385.211 and 385.214). All such motions or protests must be filed on or before June 8, 2000. Protests will be considered by the Commission in determining the appropriate action to be taken, but will not serve to make protestants parties to the proceeding. Any person wishing to become a party must file a motion to intervene. Copies of this filing are on file with the Commission and are available for public inspection in the

Public Reference Room. This filing may also be viewed on the Internet at http://www.ferc.fed.us/online/rims.htm (call 202–208–2222) for assistance. Answers to the complaint shall also be due on or before June 8, 2000.

Linwood A. Watson, Jr.,

Acting Secretary.

[FR Doc. 00–13230 Filed 5–25–00; 8:45 am]

BILLING CODE 6717–01–M

DEPARTMENT OF ENERGY

Federal Energy Regulatory Commission

[Docket No. EC00–92–000]

Nevada Sun-Peak Limited Partnership and Sun-Peak Power, LLC; Notice of Filing

May 22, 2000.

Take notice that on May 17, 2000, Nevada Sun-Peak Limited Partnership and Sun-Peak Power, LLC (Applicants) filed with the Federal Energy Regulatory Commission pursuant to Section 203 of the Federal Power Act, 16 U.S.C. 824b, and Part 33 of the Commission's regulations, a joint Application requesting that the Commission approve the transaction by which Sun-Peak Power, LLC will acquire general and limited partnership interests in Nevada Sun-Peak Limited Partnership, and a request for expedited consideration. Pursuant to 18 CFR 388.112, Applicants request confidential treatment of Exhibit H to the Application.

Any person desiring to be heard or to protest such filing should file a motion to intervene or protest with the Federal Energy Regulatory Commission, 888 First Street, NE., Washington, DC 20426, in accordance with Rules 211 and 214 of the Commission's Rules of Practice and Procedure (18 CFR 385.211 and 385.214). All such motions and protests should be filed on or before June 16, 2000. Protests will be considered by the Commission to determine the appropriate action to be taken, but will not serve to make protestants parties to the proceedings. Any person wishing to become a party must file a motion to intervene. Copies of this filing are on file with the Commission and are available for public inspection. This filing may also be viewed on the Internet at http://www.ferc.fed.us/online/rims.htm (call 202–208–2222 for assistance).

Linwood A. Watson, Jr.,

Acting Secretary.

[FR Doc. 00–13222 Filed 5–25–00; 8:45 am]

BILLING CODE 6717–01–M

DEPARTMENT OF ENERGY

Federal Energy Regulatory Commission

[Docket No. QF87–407–005]

Pedricktown Cogeneration Limited Partnership; Notice of Application for Commission Recertification of Qualifying Status of a Cogeneration Facility

May 22, 2000.

Take notice that on May 16, 2000, Pedricktown Cogeneration Limited Partnership, 143 Highway 130, Pedricktown, NJ 08067, filed with the Federal Energy Regulatory Commission an application for recertification of a facility as a qualifying cogeneration facility pursuant to Section 292.207(a) of the Commission's Regulations. No determination has been made that the submittal constitutes a complete filing. The facility is a topping-cycle cogeneration facility with a maximum net electric power production capacity of 117.8 MW. It is interconnected with Atlantic City Electric Company and sells electric capacity and energy on a merchant basis in PJM.

The Commission previously certified the facility as a qualifying cogeneration facility in docket No. QF87–407–000, Pedricktown Cogeneration Limited Partnership, 41 FERC ¶ 62,025 (1987) and recertified the facility as a qualifying cogeneration facility in Docket No. QF87–407–003, 50 FERC ¶ 62,069 (1990) and Docket No. QF87–407–004, 73 FERC ¶ 62,108 (1995). Notices of Self-certification were filed on May 7, 1987 (Docket No. QF87–407–001) and on November 2, 1987 (Docket No. QF87–407–002).

Recertification is sought to reflect the proposed sale of half of the upstream ownership interests in the Facility and to report certain changes in operating mode resulting from recent contract restructuring.

Any person desiring to be heard or to protest such filing should file a motion to intervene or protest with the Federal Energy Regulatory Commission, 888 First Street, N.E., Washington, D.C. 20426, in accordance with Rules 211 and 214 of the Commission's Rules of Practice and Procedure (18 CFR 385.211 and 385.214). All such motions and protests should be filed on or before June 15, 2000. Protests will be considered by the Commission to determine the appropriate action to be taken, but will not serve to make protestants parties to the proceedings. Any person wishing to become a party must file a motion to intervene. Copies of this filing are on file with the Commission and are available for public inspection. This filing may also be viewed on the Internet at http://www.ferc.fed.us/online/rims.htm (call 202–208–2222 for assistance).

Linwood A. Watson, Jr.,

Acting Secretary.

[FR Doc. 00–13224 Filed 5–25–00; 8:45 am]

BILLING CODE 6717–01–M

DEPARTMENT OF ENERGY

Federal Energy Regulatory Commission

[Docket No. EC00–93–000]

SOWEGA Power LLC; Notice of Filing

May 22, 2000.

Take notice that on May 17, 2000, SOWEGA Power LLC (SOWEGA Power) submitted for filing an application under Section 203 of the Federal Power Act for approval of (1) the transfer of control over SOWEGA Power's jurisdictional transmission facilities and paper facilities as a result of a transfer of ownership of SOWEGA Power from its existing owners, Grady Electric Membership Cooperative (Grady EMC) and Three Notch Electric Membership Cooperative (Three Notch EMC) to SOWEGA Energy Resources LLC, a new company to be owned by Grady EMC, Three Notch EMC, and ConerStone Operating Services, Inc., and (2) a transfer of SOWEGA Power's interest in certain 230 kV bus facilities to Baconton Power LLC.

Any person desiring to be heard or to protest such filing should file a motion to intervene or protest with the Federal Energy Regulatory Commission, 888 First Street, N.E., Washington, DC 20426, in accordance with Rules 211 and 214 of the Commission's Rules of Practice and Procedure (18 CFR 385.211 and 385.214). All such motions and protests should be filed on or before June 16, 2000. Protests will be considered by the Commission to determine the appropriate action to be taken, but will not serve to make protestants parties to the proceedings. Any person wishing to become a party must file a motion to intervene. Copies of this filing are on file with the Commission and are available for public inspection. This filing may also be viewed on the Internet at http://www.ferc.fed.us/online/rims. htm (call 202–208–2222 for assistance).

Linwood A. Watson, Jr.,

Acting Secretary.

[FR Doc. 00–13223 Filed 5–25–00; 8:45 am]

BILLING CODE 6717–01–M

DEPARTMENT OF ENERGY

Federal Energy Regulatory Commission

[Docket No. RP96–275–007]

Tennessee Gas Pipeline Company; Notice of Compliance Filing

May 22, 2000.

Take notice that on May 16, 2000, Tennessee Gas Pipeline Company (Tennessee), tendered for filing as part of its FERC Gas Tariff, Fifth Revised Volume No. 1, Sixth Revised Sheet No. 405. Tennessee requests an effective date of June 16, 2000.

Tennessee states that this filing is in compliance with the Commission's April 13, 2000 Order on Remand in the above-referenced docket (Remand Order). Tennessee Gas Pipeline Company, 91 FERC ¶ 61,053 (2000). Tennessee further states that the filing eliminates the 20-year term-matching cap from Tennessee's net present value firm capacity allocation method.

Any person desiring to protest this filing should file a protest with the Federal Energy Regulatory Commission, 888 First Street, NE, Washington, DC 20426, in accordance with Section 385.211 of the Commission's Rules and Regulations. All such protests must be filed as provided in Section 154.210 of the Commission's Regulations. Protests will be considered by the Commission in determining the appropriate action to be taken, but will not serve to make protestants parties to the proceedings. Copies of this filing are on file with the Commission and are available for public inspection in the Public Reference Room. This filing may be viewed on the web at http://www.ferc.fed.us/online/rims.htm (call 202–208–2222 for assistance).

Linwood A. Watson, Jr.,

Acting Secretary.

[FR Doc. 00–13225 Filed 5–25–00; 8:45 am]

BILLING CODE 6717–01–M

DEPARTMENT OF ENERGY

Federal Energy Regulatory Commission

[Docket No. RP97–336–004]

Trailblazer Pipeline Company; Notice of Proposed Change in FERC Gas Tariff

May 22, 2000.

Take notice that on May 15, 2000, Trailblazer Pipeline Company (Trailblazer) tendered for filing Original Sheet No. 6A to be a part of its FERC Gas Tariff, Third Revised Volume No. 1, to be effective May 15, 2000.

Trailblazer states that the purpose of this filing is to implement a negotiated rate transaction with Enservco Energy, Inc. under Trailblazer's Rate Schedule FTS pursuant to Section 38 of the General Terms and Conditions of Trailblazer's Tariff.

Trailblazer requests waiver of the Federal Energy Regulatory Commission's (Commission) Regulations, including the 30-day notice requirement of Section 154.207, to the extent necessary to permit Original Sheet No. 6A to become effective May 15, 2000.

Trailblazer states that copies of the filing are being mailed to its customers, interested state commissions and all parties set out on the Commission's official service list in Docket No. RP97–336.

Any person desiring to be heard or to protest said filing should file a motion to intervene or a protest with the Federal Energy Regulatory Commission, 888 First Street, NE., Washington, DC 20426, in accordance with Sections 385.214 or 385.211 of the Commission's Rules and Regulations. All such motions or protests must be filed in accordance with Section 154.210 of the Commission's Regulations. Protests will be considered by the Commission in determining the appropriate action to be taken, but will not serve to make protestants parties to the proceedings. Any person wishing to become a party must file a motion to intervene. Copies of this filing are on file with the Commission and are available for public inspection in the Public Reference Room. This filing may be viewed on the web at http://www.ferc.fed.us/online/rims.htm (call 202–208–2222 for assistance).

Linwood A. Watson, Jr.,

Acting Secretary.

[FR Doc. 00–13226 Filed 5–25–00; 8:45 am]

BILLING CODE 6717–01–M

DEPARTMENT OF ENERGY

Federal Energy Regulatory Commission

[Docket No. EG00–117–000, et al.]

Ameren Energy Generating Company, et al.; Electric Rate and Corporate Regulation Filings

May 22, 2000.

Take notice that the following filings have been made with the Commission:

1. Ameren Energy Generating Company

[Docket No. EG00–117–000]

Take notice that on May 18, 2000, Ameren Energy Generating Company (Generating Co.), c/o Ameren Services, 1901 Chouteau Avenue, St. Louis, MO 63166, filed with the Federal Energy Regulatory Commission an amendment to its application for determination of exempt wholesale generator status pursuant to Part 365 of the Commission's regulations.

Comment date: June 12, 2000, in accordance with Standard Paragraph E at the end of this notice. The Commission will limit its consideration of comments to those that concern the adequacy or accuracy of the application.

2. FirstEnergy System

[Docket No. ER00–2518–000]

Take notice that on May 17, 2000, FirstEnergy System tendered for filing a Service Agreement to provide Non-Firm Point-to-Point Transmission Service for Pepco Services, Inc., the Transmission Customer. Services are being provided under the FirstEnergy System Open Access Transmission Tariff submitted for filing by the Federal Energy Regulatory Commission in Docket No. ER97–412–000.

The proposed effective date under this Service Agreement is May 16, 2000 for the above mentioned Service Agreement in this filing..

Comment date: June 7, 2000, in accordance with Standard Paragraph E at the end of this notice.

3. FirstEnergy System

[Docket No. ER00–2519–000]

Take notice that on May 17, 2000, FirstEnergy System tendered for filing Service Agreements to provide Firm Point-to-Point Transmission Service for Pepco Services, Inc., the Transmission Customer. Services are being provided under the FirstEnergy System Open Access Transmission Tariff submitted for filing by the Federal Energy Regulatory Commission in Docket No. ER97–412–000.

The proposed effective date under this Service Agreement is May 16, 2000, for the above mentioned Service Agreement in this filing.

Comment date: June 7, 2000, in accordance with Standard Paragraph E at the end of this notice.

4. Southern Company Services, Inc.

[Docket No. ER00–2520–000]

Take notice that on May 17, 2000, Southern Company Services, Inc., as agent for Georgia Power Company (Georgia Power), tendered for filing the Interconnection Agreement by and

between West Georgia Generating Company L.P. (West Georgia) and Georgia Power (the Agreement). The Agreement permits West Georgia to interconnect and operate in parallel with the Georgia Power electric system.

The Agreement is dated as of May 11, 2000 and shall terminate upon mutual written agreement of the parties.

Comment date: June 7, 2000, in accordance with Standard Paragraph E at the end of this notice.

5. The Dayton Power and Light Company

[Docket No. ER00–2521–000]

Take notice that on May 17, 2000, The Dayton Power and Light Company (Dayton), tendered for filing service agreements establishing MIECO Inc., as customers under the terms of Dayton's Open Access Transmission Tariff.

Dayton requests an effective date of one day subsequent to this filing for the service agreements. Accordingly, Dayton requests waiver of the Commission's notice requirements.

Copies of this filing were served upon establishing MIECO Inc., and the Public Utilities Commission of Ohio.

Comment date: June 7, 2000, in accordance with Standard Paragraph E at the end of this notice.

6. The Dayton Power and Light Company

[Docket No. ER00–2522–000]

Take notice that on May 17, 2000, The Dayton Power and Light Company (Dayton), tendered for filing service agreements establishing with Cargill—Alliant, LLC and MIECO Inc., as customers under the terms of Dayton's Open Access Transmission Tariff.

Dayton requests an effective date of one day subsequent to this filing for the service agreements. Accordingly, Dayton requests waiver of the Commission's notice requirements.

Copies of this filing were served upon with Cargill—Alliant, LLC, MIECO Inc., and the Public Utilities Commission of Ohio.

Comment date: June 7, 2000, in accordance with Standard Paragraph E at the end of this notice.

7. Public Service Company of New Mexico

[Docket No. ER00–2523–000]

Take notice that on May 17, 2000, Public Service Company of New Mexico (PNM), tendered for filing an executed service agreement and network operating agreement for network integration transmission service under the terms of PNM's Open Access Transmission Service Tariff with Navopache Electric Cooperative, Inc. (Navopache), dated April 26, 2000. PNM's filing is available for public inspection at its offices in Albuquerque, New Mexico

Copies of this filing have been served upon Navopache and the New Mexico Public Regulation Commission.

Comment date: June 7, 2000, in accordance with Standard Paragraph E at the end of this notice.

8. Entergy Services, Inc.

[Docket No. ER00–2524–000]

Take notice that on May 17, 2000, Entergy Services, Inc., on behalf of Entergy Louisiana, Inc., tendered for filing an Interconnection and Operating Agreement with Ouachita Power, LLC (Ouachita), and a Generator Imbalance Agreement with Ouachita.

Comment date: June 7, 2000, in accordance with Standard Paragraph E at the end of this notice.

9. Entergy Services, Inc.

[Docket No. ER00–2525–000]

Take notice that on May 17, 2000, Entergy Services, Inc., on behalf of Entergy Louisiana, Inc., tendered for filing an Interconnection and Operating Agreement with Koch Power Louisiana, L.L.C. (Koch), and a Generator Imbalance Agreement with Koch.

Comment date: June 7, 2000, in accordance with Standard Paragraph E at the end of this notice.

10. Entergy Services, Inc.

[Docket No. ER00–2526–000]

Take notice that on May 17, 2000, Entergy Services, Inc., on behalf of Entergy Gulf States, Inc., tendered for filing an Interconnection and Operating Agreement with Acadia Power Partners, LLC (Acadia), the First Amendment to the Interconnection Agreement with Acadia, and a Generator Imbalance Agreement with Acadia.

Comment date: June 7, 2000, in accordance with Standard Paragraph E at the end of this notice.

11. New Century Services, Inc.

[Docket No. ER00–2528–000]

Take notice that on May 17, 2000, New Century Services, Inc. (NCS), on behalf of Public Service Company of Colorado (Public Service), tendered for filing the Master Power Purchase and Sale Agreement between Public Service and Western Area Power Administration—Colorado River Storage Project., which is an umbrella service agreement under Public Service's Rate Schedule for Market-Based Power Sales (Public Service FERC Electric Tariff, Original Volume No. 6).

NCS requests that this agreement become effective on April 27, 2000.

Comment date: June 7, 2000, in accordance with Standard Paragraph E at the end of this notice.

12. Dow Pipeline Company

[Docket No. ER00–2529–000]

Take notice that on May 17, 2000, Dow Pipeline Company (DPL), tendered for filing pursuant to Rule 205, 18 CFR 385.205, a petition for waivers and blanket approvals under various regulations of the Commission and for an order accepting its FERC Electric Rate Schedule No. 1, and for the purpose of permitting Dow to assign transmission capacity and to resell Firm Transmission Rights, to be effective as of May 18, 2000, the day following the date of its filing.

DPL intends to engage in electric power and energy transactions as a marketer. In transactions where DPL sells electric energy, it proposes to make such sales on rates, terms, and conditions to be mutually agreed to with the purchasing party. Neither DPL nor any of its affiliates is in the business of transmitting or distributing electric power.

Rate Schedule No. 1 provides for the sale of energy and capacity at agreed prices.

Comment date: June 7, 2000, in accordance with Standard Paragraph E at the end of this notice.

13. Entergy Services, Inc.

[Docket No. ER00–2530–000]

Take notice that on May 17, 2000, Entergy Services, Inc., on behalf of Entergy Arkansas, Inc., Entergy Gulf States, Inc., Entergy Louisiana, Inc., Entergy Mississippi, Inc., and Entergy New Orleans, Inc., (collectively, the Entergy Operating Companies) tendered for filing a Non-Firm Point-To-Point Transmission Service Agreement and a Short-Term Firm Point-To-Point Transmission Service Agreement both between Entergy Services, Inc., as agent for the Entergy Operating Companies, and MIECO, Inc.

Comment date: June 7, 2000, in accordance with Standard Paragraph E at the end of this notice.

14. Commonwealth Edison Company

[Docket No. ER00–2531–000]

Take notice that on May 17, 2000, Commonwealth Edison Company (ComEd) tendered for filing, pursuant to Section 205 of the Federal Power Act, and Part 35 of the Commission's Regulations, an Application for Authorization to Amend Market-Based Rate Schedule to allow ComEd to sell

power at market-based rates to Central Illinois Power Company (CILCO).

ComEd also requests that the Commission permit its proposed amended rate schedule to take effect on May 18, 2000.

Comment date: June 7, 2000, in accordance with Standard Paragraph E at the end of this notice.

15. Tampa Electric Company

[Docket No. ER00–2532–000]

Take notice that on May 17, 2000, Tampa Electric Company (Tampa Electric), tendered for filing service agreements with Allegheny Energy Supply Company, LLC (Allegheny) for firm and non-firm point-to-point transmission service under Tampa Electric's open access transmission tariff.

Tampa Electric proposes an effective date of May 17, 2000, for the tendered service agreements, and therefore requests waiver of the Commission's notice requirement.

Copies of the filing have been served on Allegheny and the Florida Public Service Commission.

Comment date: June 7, 2000, in accordance with Standard Paragraph E at the end of this notice.

16. Tampa Electric Company

[Docket No. ER00–2533–000]

Take notice that on May 17, 2000, Tampa Electric Company (Tampa Electric), tendered for filing the First Amendment to the Interconnection Agreement among Tampa Electric, Seminole Electric Cooperative, Inc. (Seminole), and Hardee Power Partners Limited (HPP).

Tampa Electric proposes that the First Amendment be made effective on April 18, 2000, and therefore requests waiver of the Commission's notice requirement.

Copies of the filing have been served on Seminole, HPP, and the Florida Public Service Commission.

Comment date: June 7, 2000, in accordance with Standard Paragraph E at the end of this notice.

17. SOWEGA Power LLC

[Docket No. ER00–2534–000]

Take notice that on May 17, 2000, SOWEGA Power LLC tendered for filing, pursuant to Section 205 of the Federal Power Act, a Common Bus Ownership Agreement between itself and its prospective affiliate, Baconton Power LLC. The agreement concerns ownership interests in certain 230 kV bus facilities on the plant site shared by SOWEGA Power and Baconton Power that are used to connect the generators to Georgia Transmission Corporation.

SOWEGA Power seeks a waiver of the Commission's 60 day prior notice and filing requirements and requests an effective date from the Commission as of May 18, 2000.

Comment date: June 7, 2000, in accordance with Standard Paragraph E at the end of this notice.

18. EMW Marketing Corp.

[Docket No. ER00–2535–000]

Take notice that on May 17, 2000, EMW Marketing Corp. (EMW), tendered for filing an application for waivers and blanket approvals under various regulations of the Commission and for an order accepting EMW's FERC Electric Rate Schedule No. 1 and accompanying Code of Conduct to be effective as of 60 days from the date of the filing or upon issuance of the Commission's order accepting the Rate Schedule and Code of Conduct.

EMW intends to engage in electric power and energy transactions as a marketer and a broker. In transactions where EMW sells electric energy, it proposes to make such sales on rates, terms and conditions to be mutually agreed to with the purchasing party. EMW's proposed Rate Schedule also permits it to reassign transmission capacity and make resales of firm transmission rights in California.

Comment date: June 7, 2000, in accordance with Standard Paragraph E at the end of this notice.

19. Ameren Services Company

[Docket No. ER00–2538–000]

Take notice that on May 17, 2000, Ameren Services Company (AMS) , as Agent for Central Illinois Public Service Company (CIPS), tendered for filing a Fifth Amendment and Service Schedule L, each dated April 24, 2000, to the Power Supply Agreement, dated June 11, 1987, as amended, between Illinois Municipal Electric Agency (IMEA) and CIPS. AMS asserts that the purpose of the Amendment is to establish a two-year firm power supply for two of IMEA's members '' the cities of Batavia, IL and St. Charles, IL.

AMS requests that open acceptance of these filings retroactively become effective June 1, 2000.

Comment date: June 7, 2000, in accordance with Standard Paragraph E at the end of this notice.

Standard Paragraphs

E. Any person desiring to be heard or to protest such filing should file a motion to intervene or protest with the Federal Energy Regulatory Commission, 888 First Street, N.E., Washington, D.C. 20426, in accordance with Rules 211 and 214 of the Commission's Rules of Practice and Procedure (18 CFR 385.211 and 385.214). All such motions or protests should be filed on or before the comment date. Protests will be considered by the Commission in determining the appropriate action to be taken, but will not serve to make protestants parties to the proceeding. Any person wishing to become a party must file a motion to intervene. Copies of these filings are on file with the Commission and are available for public inspection. This filing may also be viewed on the Internet at http://www.ferc.fed.us/ online/rims.htm (call 202–208–2222 for assistance).

Linwood A. Watson, Jr.,

Acting Secretary.

[FR Doc. 00–13220 Filed 5–25–00; 8:45 am]

BILLING CODE 6717–01–P

DEPARTMENT OF ENERGY

Federal Energy Regulatory Commission

[Docket No. ER00–2157–001, et al.]

Commonwealth Edison Company, et al.; Electric Rate and Corporate Regulation Filings

May 17, 2000.

Take notice that the following filings have been made with the Commission:

1. Commonwealth Edison Company

[Docket No. ER00–2157–001]

Take notice that on May 12, 2000, Commonwealth Edison Company (ComEd) tendered for filing Amendment No. 1 to the Interconnection Agreement between ComEd and Des Plaines Green Land Development L.L.C. (Des Plaines), which ComEd filed with the Commission on April 10, 2000 in Docket No. ER00–2157–000.

ComEd requests the same effective date of April 11, 2000, for Amendment No. 1 as it requested for the Interconnection Agreement in its April 10, 2000 filing.

Copies of the filing were served on Des Plaines and the Illinois Commerce Commission.

Comment date: June 2, 2000, in accordance with Standard Paragraph E at the end of this notice.

2. AES Eastern Energy, L.P.

[Docket No. ER00–2463–000]

Take notice that on May 10, 2000, AES Eastern Energy, L.P. (AES Eastern), tendered for filing two long-term service agreements. Both contracts are between AES Eastern and Aquila Risk Management Corporation.

Comment date: May 30, 2000, in accordance with Standard Paragraph E at the end of this notice.

3. Commonwealth Edison Company

[Docket No. ER00–2472–000]

Take notice that on May 12, 2000, Commonwealth Edison Company (ComEd) tendered for filing pursuant to Section 35.15 of the Federal Energy Regulatory Commission's regulations, 18 CFR 35.15, a Notice of Cancellation of Service Agreement Nos. 76, 15, and 163 between ComEd and Sonat Power Marketing, L.P. (Sonat), and a Notice of Cancellation of Service Agreement No. 7 between ComEd and Illinova Energy Partners, Inc. (IEP) under ComEd's Open Access Transmission Tariff (OATT).

ComEd requests an effective date of May 12, 2000, for the cancellations and accordingly requests waiver of the Commission's notice requirements.

ComEd served copies of the filing upon EPME, and Dynegy, the successors in interest to Sonat and IEP, respectively.

Comment date: June 2, 2000, in accordance with Standard Paragraph E at the end of this notice.

4. American Electric Power Service Corporation Central and South West Services, Inc.

[Docket No.ER00–2473–000]

Take notice that on May 12, 2000, American Electric Power Service Corporation tendered for filing, on behalf of the operating company subsidiaries of American Electric Power Company, Inc. and Central and South West Corporation, proposed amendments to the Open Access Transmission Tariff accepted for filing by the Commission in Docket No. ER98–2786–000.

Comment date: June 2, 2000, in accordance with Standard Paragraph E at the end of this notice.

5. Southern Indiana Gas and Electric Company

[Docket No. ER00–2474–000]

Take notice that on May 12, 2000, Southern Indiana Gas and Electric Company (SIGECO), tendered for filing service agreements for firm and non-firm transmission service under Part II of its Transmission Services Tariff with Cinergy Capital & Trading, Inc. (CCT), and MIECO, Inc.

Copies of the filing were served upon each of the parties to the service agreement.

Comment date: June 2, 2000, in accordance with Standard Paragraph E at the end of this notice.

6. Jersey Central Power & Light Company

[Docket No. ER00–2475–000]

Take notice that on May 12, 2000, Jersey Central Power & Light Company (doing business and referred to as GPU Energy), tendered for filing two amendments to the Interconnection Agreement, dated as of March 1, 1978, as amended, between GPU Energy and Atlantic City Electric Company (Agreement). The amendments revise a component of the rate for service under the Agreement relating to GPU Energy's O&M expense for 2000 and 2001.

Comment date: June 2, 2000, in accordance with Standard Paragraph E at the end of this notice.

7. Commonwealth Edison Company

[Docket No. ER00–2476–000]

Take notice that on May 12, 2000, Commonwealth Edison Company (ComEd), tendered for filing a Notice of Cancellation for Service Agreement No. 334 (between ComEd and Commonwealth Edison Company, in its Wholesale Merchant Function (WMD) for Firm Point-to-Point Transmission Service under ComEd's Open Access Transmission Tariff (OATT), and submits for filing a firm service agreement (New Service Agreement) between ComEd and WMD under ComEd's Open Access Transmission Tariff, FERC Electric Tariff Volume No. 5 (OATT).

ComEd requests an effective date of May 1, 2000, for the New Service Agreement and the cancellation of Service Agreement No. 334, and accordingly, seeks waiver of the Commission's notice requirements.

Copies of this filing were served on WMD.

Comment date: June 2, 2000, in accordance with Standard Paragraph E at the end of this notice.

8. Western Systems Power Pool

[Docket No. ER00–2477–000]

Take notice that on May 12, 2000, the Western Systems Power Pool (WSPP), tendered for filing certain revisions to the WSPP Agreement. The WSPP states that these changes are intended to clarify certain provisions relating to firm sales, and to allow the WSPP members to modify certain provisions of the WSPP Agreement on a transaction-specific basis as agreed to by the parties.

The WSPP seeks an effective date of July 1, 2000 for this filing.

The WSPP states that copies of this filing have been served upon all state commissions within the continental United States and all members of the WSPP.

Comment date: June 2, 2000, in accordance with Standard Paragraph E at the end of this notice.

9. Virginia Electric and Power Company

[Docket No. ER00–2478–000]

Take notice that on May 12, 2000, Virginia Electric and Power Company (Virginia Power), tendered for filing a service agreement for Firm Point-to-Point Transmission Service by Virginia Electric and Power Company to Amerada Hess Corporation and a Service Agreement for Non-Firm Point-to-Point Transmission Service by Virginia Electric and Power Company to Amerada Hess Corporation.

The foregoing Service Agreements are tendered for filing under the Open Access Transmission Tariff to Eligible Purchasers dated July 14, 1997. Under the tendered Service Agreements, Virginia Power will provide point-to-point service to the Transmission Customer under the rates, terms and conditions of the Open Access Transmission Tariff.

Virginia Power requests an effective date of May 12, 2000, the date of filing of the Service Agreements.

Copies of the filing were served upon Amerada Hess Corporation, the Virginia State Corporation Commission and the North Carolina Utilities Commission.

Comment date: June 2, 2000, in accordance with Standard Paragraph E at the end of this notice.

10. Madison Gas and Electric Company

[Docket No. ER00–2479–000]

Take notice that on May 12, 2000, Madison Gas and Electric Company (MGE), tendered for filing a service agreement under MGE's Market-Based Power Sales Tariff with The Dayton Power and Light Company.

MGE requests this agreement be effective the date the agreement was filed with the FERC.

Comment date: June 2, 2000, in accordance with Standard Paragraph E at the end of this notice.

11. Wisconsin Electric Power Company

[Docket No. ER00–2480–000]

Take notice that on May 12, 2000, Wisconsin Electric Power Company (Wisconsin Electric), tendered for filing a Short-Term Firm Transmission Service Agreement and a non-firm Transmission Service Agreement between itself and NewEnergy Inc. (NewEnergy). The Transmission Service Agreements allow NewEnergy to receive transmission services under Wisconsin Energy Corporation Operating Companies' FERC Electric Tariff, Volume No. 1.

Wisconsin Electric requests an effective date coincident with its filing and waiver of the Commission's notice requirements in order to allow for economic transactions as they appear.

Copies of the filing have been served on NewEnergy, the Public Service Commission of Wisconsin and the Michigan Public Service Commission.

Comment date: June 2, 2000, in accordance with Standard Paragraph E at the end of this notice.

12. Wisconsin Electric Power Company

[Docket No. ER00–2481–000]

Take notice that on May 12, 2000, Wisconsin Electric Power Company (Wisconsin Electric), tendered for filing a short-term firm Transmission Service Agreement and a non-firm Transmission Service Agreement between itself and Calpine Power Services Company (Calpine). The Transmission Service Agreements allow Calpine to receive transmission services under Wisconsin Energy Corporation Operating Companies' FERC Electric Tariff, Volume No. 1.

Wisconsin Electric requests an effective date coincident with its filing and waiver of the Commission's notice requirements in order to allow for economic transactions as they appear.

Copies of the filing have been served on Calpine, the Public Service Commission of Wisconsin and the Michigan Public Service Commission.

Comment date: June 2, 2000, in accordance with Standard Paragraph E at the end of this notice.

13. Central Power and Light Company, West Texas Utilities Company, Public Service Company of Oklahoma, Southwestern Electric Power Company

[Docket No. ER00–2482–000]

Take Notice that on May 12, 2000, Central Power and Light Company, West Texas Utilities Company, Public Service Company of Oklahoma and Southwestern Electric Power Company (collectively, the CSW Operating Companies), tendered for filing revised pages to the CSW Operating Companies' open access transmission service tariff (CSW OATT).

The CSW Operating Companies state that a copy of the filing was served on the Public Utility Commission of Texas, the Oklahoma Corporation Commission, the Arkansas Public Service Commission, the Louisiana Public Service Commission, and on all persons with whom the CSW Operating Companies have entered into service agreements under the CSW OATT.

Comment date: June 2, 2000, in accordance with Standard Paragraph E at the end of this notice.

14. New Century Services, Inc.

[Docket No. ER00–2483–000]

Take notice that on May 12, 2000, New Century Services, Inc. (NCS), on behalf of Public Service Company of Colorado (Public Service), tendered for filing the Master Power Purchase and Sale Agreement between Public Service and Sempra Energy Trading Corp., which is an umbrella service agreement under Public Service's Rate Schedule for Market-Based Power Sales (Public Service FERC Electric Tariff, Original Volume No. 6).

NCS requests that this agreement become effective on April 14, 2000.

Comment date: June 2, 2000, in accordance with Standard Paragraph E at the end of this notice.

15. Tucson Electric Power Company

[Docket No. ER00–2484–000]

Take notice that on May 12, 2000, Tucson Electric Power Company tendered for filing an Umbrella Agreement for Short-Term Firm Point-to-Point Transmission Service dated as of May 4, 2000 by and between Tucson Electric Power Company and Southern California Edison Company. No service has commenced at this time, and also a Non-Firm Service Agreement dated as of May 4, 2000 by and between Tucson Electric Power Company and Southern California Edison Company. Service commenced on April 13, 2000.

Comment date: June 2, 2000, in accordance with Standard Paragraph E at the end of this notice.

16. Allegheny Energy Service Corporation, on behalf of Allegheny Energy Supply Company, LLC

[Docket No. ER00–2499–000]

Take notice that on May 12, 2000, Allegheny Energy Service Corporation on behalf of Allegheny Energy Supply Company, LLC (Allegheny Energy Supply), tendered for filing Amendment No. 3 to Supplement No. 23 to the Market Rate Tariff to incorporate a Netting Agreement with New York State Electric & Gas Corporation into the tariff provisions.

Allegheny Energy Supply requests a waiver of notice requirements to make the Amendment effective as of May 3, 2000 or such other date as ordered by the Commission.

Copies of the filing have been provided to the Public Utilities Commission of Ohio, the Pennsylvania Public Utility Commission, the Maryland Public Service Commission, the Virginia State Corporation Commission, the West Virginia Public Service Commission, and all parties of record.

Comment date: June 2, 2000, in accordance with Standard Paragraph E at the end of this notice.

Standard Paragraphs

E. Any person desiring to be heard or to protest such filing should file a motion to intervene or protest with the Federal Energy Regulatory Commission, 888 First Street, NE., Washington, DC 20426, in accordance with Rules 211 and 214 of the Commission's Rules of Practice and Procedure (18 CFR 385.211 and 385.214). All such motions or protests should be filed on or before the comment date. Protests will be considered by the Commission in determining the appropriate action to be taken, but will not serve to make protestants parties to the proceeding. Any person wishing to become a party must file a motion to intervene. Copies of these filings are on file with the Commission and are available for public inspection. This filing may also be viewed on the Internet at http://www.ferc.fed.us/online/rims.htm (call 202–208–2222 for assistance).

Linwood A. Watson, Jr.,

Acting Secretary.

[FR Doc. 00–13219 Filed 5–25–00; 8:45 am]

BILLING CODE 6717–01–P

DEPARTMENT OF ENERGY

Federal Energy Regulatory Commission

[Docket No. ER00–2212–001, et al.]

Entergy Services. Inc., et al. Electric Rate and Corporate Regulation Filings

May 18, 2000.

Take notice that the following filings have been made with the Commission:

1. Entergy Services, Inc.

Docket No. ER00–2212–001]

Take notice that on May 12, 2000, Entergy Services, Inc., acting as agent for Entergy Arkansas, Inc. and Entergy Gulf States, Inc., tendered for filing an amendment to its April 14, 2000, filing of Generator Imbalance Agreements with Pine Bluff Energy LLC (Pine Bluff) and Carville Energy LLC (Carville), and amendments to the Interconnection and Operating Agreements with Pine Bluff and Carville.

Comment date: June 2, 2000, in accordance with Standard Paragraph E at the end of this notice.

2. Wisconsin Public Service Corporation

[Docket No. ER00–2495–000]

Take notice that on May 15, 2000, Wisconsin Public Service Corporation (WPSC), tendered for filing an amendment to its Coordination Sales Tariff (CST), FERC Electric Tariff, First Revised Volume No. 5. WPSC filed this amendment to change the definition of ''out-of-pocket cost'' for purposes of Service Schedule A—Negotiated Capacity and Energy, Service Schedule B—General Purpose Energy and Service Schedule C—Emergency Energy. This filing also reformats the CST to comply with the Commission's new tariff sheet designation policy.

Copies of the filing were served upon the public utility's customers under the CST Tariff, the Public Service Commission of Wisconsin and the Michigan Public Service Commission.

Comment date: June 5, 2000, in accordance with Standard Paragraph E at the end of this notice.

3. Allegheny Energy Service Corporation, on behalf of Allegheny Energy Supply Company, LLC

[Docket No. ER00–2494–000]

Take notice that on May 15, 2000, Allegheny Energy Service Corporation on behalf of Allegheny Energy Supply Company, LLC (Allegheny Energy Supply), tendered for filing Supplement No. 41 to add one (1) new Customer to the Market Rate Tariff under which Allegheny Energy Supply Company offers generation services; and filed Amendment No. 1 to Supplement No. 41 to incorporate a Netting Agreement with FirstEnergy Trading Services, Inc. into the tariff provisions.

Allegheny Energy Supply requests a waiver of notice requirements both to make service available to the Customer and to make the Netting Agreement effective as of April 16, 2000 or on a date as determined by the Commission.

Copies of the filing have been provided to the Public Utilities Commission of Ohio, the Pennsylvania Public Utility Commission, the Maryland Public Service Commission, the Virginia State Corporation Commission, the West Virginia Public Service Commission, and all parties of record.

Comment date: June 5, 2000, in accordance with Standard Paragraph E at the end of this notice.

4. Maine Electric Power Company

[Docket No. ER00–2493–000]

Take notice that on May 15, 2000, Maine Electric Power Company (MEPCO) tendered for filing a service agreement for Non-Firm Point-to-Point Transmission service entered into with Duke Energy Trading and Marketing. Service will be provided pursuant to MEPCO's Open Access Transmission Tariff, designated rate schedule MEPCO—FERC Electric Tariff, Original Volume No. 1, as supplemented.

Comment date: June 5, 2000, in accordance with Standard Paragraph E at the end of this notice.

5. Public Service Company of New Mexico

[Docket No. ER00–2127–000]

Take notice that on May 15, 2000, Public Service Company of New Mexico (PNM), tendered for filing an amendment to its April 5, 2000, filing of Notices of Cancellation of various Electric Power Sale, Purchase, and Tariff Service Agreements. In the amendment, PNM withdraws the Notice of Cancellation for the Service Agreement between PNM and Washington Water Power Company (now known as Avista Corporation) dated June 1, 1992 under Avista Corporation's FERC Electric Rate Tariff Original Volume No. 4. PNM's filing is available for public inspection at its offices in Albuquerque, New Mexico.

Comment date: June 5, 2000, in accordance with Standard Paragraph E at the end of this notice.

6. Commonwealth Edison Company

[Docket No. ER00–2487–000]

Take notice that on May 15, 2000, Commonwealth Edison Company (ComEd), tendered for filing a Sales Agreement to sell power and energy to Central Illinois Light Company (CILCO).

ComEd requests an effective date of May 16, 2000 for the agreements and accordingly seeks waiver of the Commission's notice requirements.

Copies of the filing were served on CILCO.

Comment date: June 5, 2000, in accordance with Standard Paragraph E at the end of this notice.

7. Commonwealth Edison Company

[Docket No. ER00–2486–000]

Take notice that on May 15, 2000, Commonwealth Edison Company (ComEd), tendered for filing MBR Sales Agreements establishing Dynegy Energy Services, Inc., MidAmerican Energy Company and Nicor Energy, L.L.C. as customers under ComEd's FERC Electric Market Based-Rate Schedule for power sales.

ComEd requests an effective date of May 16, 2000 for the agreements and accordingly seeks waiver of the Commission's notice requirements.

Copies of the filing were served on Dynegy Energy Services, Inc., MidAmerican Energy Company and Nicor Energy L.L.C.

Comment date: June 5, 2000, in accordance with Standard Paragraph E at the end of this notice.

8. Reliant Energy Mid-Atlantic Power Holdings, LLC

[Docket No. ER00–2508–000]

Take notice that on May 15, 2000, Reliant Energy Mid-Atlantic Power Holdings, LLC (Reliant Energy Mid-Atlantic), tendered for filing a Notice of Succession pursuant to Section 35.16 of the Commission's Regulations, 18 CFR 35.16. Reliant Energy Mid-Atlantic is succeeding to the FERC Electric Tariff, First Revised Volume No. 1 of Reliant Energy Pennsylvania Holdings, LLC, effective May 12, 2000.

Comment date: June 5, 2000, in accordance with Standard Paragraph E at the end of this notice.

9. Allegheny Energy Service Corporation, on behalf of Monongahela Power Company, The Potomac Edison Company and West Penn Power Company (Allegheny Power)

[Docket No. ER00–1262–000]

Take notice that on May 12, 2000, Allegheny Energy Service Corporation on behalf of Monongahela Power Company, The Potomac Edison Company and West Penn Power Company (Allegheny Power), tendered for filing filed revisions to its Open Access Transmission Tariff in compliance with the Commission's Order of Aril 13, 2000 at Docket No. ER00–1262–000, 91 FERC ¶ 61,044.

Copies of the filing have been provided to jurisdictional customers, the Public Utilities Commission of Ohio, the Pennsylvania Public Utility Commission, the Maryland Public Service Commission, the Virginia State Corporation Commission, the West Virginia Public Service Commission and all parties of record.

Comment date: June 2, 2000, in accordance with Standard Paragraph E at the end of this notice.

10. MidAmerican Energy Company

[Docket No. ER00–2503–000]

Take notice that on May 15, 2000, MidAmerican Energy Company (MidAmerican), tendered for filing with the Commission a Notice of Cancellation of its Service Agreement dated July 11, 1962, between Iowa Power and Light Company (a predecessor company of MidAmerican) and the City of Neola, Iowa, pursuant to Section 35.15 of the Commission's

Regulations. This Agreement has been designated as MidAmerican Rate Schedule No. 33.

MidAmerican requests a waiver of Section 35.15 to the extent that this Notice of Cancellation has not been filed within the time required by such section. MidAmerican inadvertently failed to submit the Notice of Cancellation upon expiration of the agreement under its own terms.

MidAmerican requests that the following rate schedule be canceled effective as of 11:59 p.m. on March 31, 1999:

MidAmerican has mailed a copy of this filing to City of Neola, Iowa, the Iowa Utilities Board, the Illinois Commerce Commission and the South Dakota Public Utilities Commission.

Comment date: June 5, 2000, in accordance with Standard Paragraph E at the end of this notice.

11. PacifiCorp, Portland General Electric Company, Puget Sound Energy, Inc., Avista Corporation; TransAlta Centralia Generation LLC

[Docket No. EC00–87–001]

Take notice that on May 11, 2000, PacifiCorp, Portland General Electric Company, Puget Sound Energy, Inc., and Avista Corporation, and TransAlta Centralia Generation LLC (TACG) (collectively, the Applicants) filed as part of Exhibit H to their Application filed on Friday, May 5, 2000 pursuant to Section 203 of the Federal Power Act, an unexecuted version of the Assignment and Assumption Agreement for the transfer of the Standby Service Agreement.

Comment date: June 5, 2000, in accordance with Standard Paragraph E at the end of this notice.

12. PacifiCorp; Portland General Electric Company; Puget Sound Energy, Inc.; Avista Corporation; TransAlta Centralia Generation LLC

[Docket No. EC00–87–000]

Take notice that on May 5, 2000, PacifiCorp, Portland General Electric Company, Puget Sound Energy, Inc., Avista Corporation (collectively, the Joint Parties), and TransAlta Centralia Generation LLC (TACG) (together, the Applicants) submitted for filing an application pursuant to Section 203 of the Federal Power Act (FPA) seeking authorization to assign the rights and obligations of the Joint Parties under the Centralia Standby Service Agreement between Bonneville Power Administration (BPA) and the Joint Parties from the Joint Parties to TACG.

On May 8, 2000, the applicants filed an errata to their application correcting footnote one on page one of the application. It incorrectly stated that the Joint parties and certain other non-jurisdictional public entities are the joint owners of the Centralia Steam Electric Generating Plant (the Centralia Facility). The Applicants would like to clarify that these parties interests in the Centralia Facility were conveyed to TACG in a transaction which was approved by the Commission and consummated on May 4, 2000.

Comment date: June 5, 2000, in accordance with Standard Paragraph E at the end of this notice.

13. Madison Gas & Electric Company

[Docket No. EC00–89–000]

Take notice that on May 9, 2000, Madison Gas & Electric Company (MGE), pursuant to Section 203 of the Federal Power Act, 16 U.S.C. § 824b, filed an Application for approval to transfer operational control over certain identified transmission facilities to the Midwest Independent Transmission System Operator, Inc. (Midwest ISO). MGE states that this filing is intended to reflect the fact that it has joined the Midwest ISO, and to allow for the transfer of control of the identified facilities to the Midwest ISO.

MGE states that the filing has been served on all affected state commissions and all parties in Docket Nos. ER98–1438 and EC98–24.

Comment date: June 8, 2000, in accordance with Standard Paragraph E at the end of this notice.

14. P&L Coal Holdings Corporation; Edison Mission Energy; Citizens Power LLC

[Docket No. EC00–90–000]

Take notice that on May 12, 2000, P&L Coal Holdings Corporation, Edison Mission Energy, and Citizens Power LLC filed an application for an order authorizing the proposed sale to Edison Mission Energy, of certain of P&L Coal Holdings Corporation's indirect equity interests in the following power marketing entities: Citizens Power Sales LLC, Hartford Power Sales, L.L.C., CL Power Sales One, L.L.C., CL Power Sales Two, L.L.C., CP Power Sales Five, L.L.C., CL Power Sales Six, L.L.C., CL Power Sales Seven, L.L.C., CL Power Sales Eight, L.L.C., CL Power Sales Nine, L.L.C., CL Power Sales Ten, L.L.C., CP Power Sales Twelve, L.L.C., CP Power Sales Thirteen, L.L.C., CP Power Sales Fourteen, L.L.C., CP Power Sales Fifteen, L.L.C., CP Power Sales Seventeen, L.L.C., CP Power Sales Eighteen, L.L.C., CP Power Sales Nineteen, L.L.C., and CP Power Sales Twenty, L.L.C.

Comment date: June 12, 2000, in accordance with Standard Paragraph E at the end of this notice.

15. Conectiv; NRG Energy, Inc.

[Docket No. EC00–91–000]

Take notice that on May 15, 2000, Conectiv and NRG Energy, Inc. (NRG Energy) (collectively, the Applicants) submitted on behalf of certain of their respective subsidiaries a joint application under Section 203 of the Federal Power Act and Part 33 of the Commission's regulations to request authorization and approval for the sale of certain jurisdictional transmission facilities (and the appurtenant generating facilities) and for the assignment of interests in the Keystone and Conemaugh Interconnection Agreements to NRG Energy.

The Conectiv subsidiaries involved in the sale of the facilities and interests are Delmarva Power & Light Company, Atlantic City Electric Company, and Conectiv Delmarva Generation, Inc. The NRG Energy subsidiaries who will acquire the Conectiv facilities and interests are Deepwater Power LLC; B. L. England Power LLC; Indian River Power LLC; Vienna Power LLC; Keystone Power LLC; and Conemaugh Power LLC. The NRG Energy subsidiaries who will participate in the ownership of those six companies are MidAtlantic Generation Holding LLC; NRG Atlantic LLC; and NRG MidAtlantic Generating LLC.

The Applicants' proposed closing date for the sale and assignment is on or about September 1, 2000. The Applicants request approval of the transaction by or about August 1, 2000.

The Applicants state that copies of their joint application have been served upon the state regulatory commissions of New Jersey, Delaware, Maryland, Pennsylvania and Virginia; the signatories to the Keystone and Conemaugh Interconnection Agreements; the PJM Interconnection, LLC; Delmarva's wholesale requirements customers; and the wholesale electric systems dependent on Atlantic or Delmarva for access to the PJM transmission grid.

Comment date: June 14, 2000, in accordance with Standard Paragraph E at the end of this notice.

16. New England Power Pool

[Docket No. ER00–2485–000]

Take notice that on May 15, 2000, the New England Power Pool (NEPOOL) Participants Committee and Transmission Owners submitted the Fifty-Fifth Agreement Amending the New England Power Pool Agreement

(Fifty-Fifth Agreement) which provides for the addition of System Restoration and Planning Services to the NEPOOL Tariff, including both requirements and compensation for the provision of those services. The NEPOOL Participants Committee and Transmission Owners could not agree on the effective date for the Agreement and have requested the Commission determine the effective date provided such date is not later than July 14, 2000.

The NEPOOL Participants Committee and Transmission Owners state that copies of these materials were sent to the NEPOOL Participants and the six New England state governors and regulatory commissions.

Comment date: June 5, 2000, in accordance with Standard Paragraph E at the end of this notice.

17. Commonwealth Edison Company

[Docket No. ER00–2488–000]

Take notice that on May 15, 2000, Commonwealth Edison Company (ComEd) tendered for filing a Sales Agreement to sell power and energy to Unicom Energy, Inc. (UEI).

ComEd requests an effective date of May 16, 2000 for the agreements and accordingly seeks waiver of the Commission's notice requirements.

Copies of the filing were served on UEI.

Comment date: June 5, 2000, in accordance with Standard Paragraph E at the end of this notice.

18. Louisville Gas And Electric Company; Kentucky Utilities Company

[Docket No. ER00–2489–000]

Take notice that on May 15, 2000, Louisville Gas and Electric Company (LG&E)/Kentucky Utilities (KU) (hereinafter Companies) tendered for filing executed unilateral Service Sales Agreement between Companies and Connectiv Energy Supply, Inc. under the Companies' Rate Schedule MBSS. This filing replaces previous filing of unexecuted agreement filed on April 18, 2000 and designated Docket No. ER00–2231–000.

Comment date: June 5, 2000, in accordance with Standard Paragraph E at the end of this notice.

19. Louisville Gas And Electric Company; Kentucky Utilities Company

[Docket No. ER00–2490–000]

Take notice that on May 15, 2000, Louisville Gas and Electric Company (LG&E)/Kentucky Utilities (KU) (hereinafter Companies) tendered for filing an executed Netting Agreement between the Companies and Connectiv Energy Supply, Inc.

Comment date: June 5, 2000, in accordance with Standard Paragraph E at the end of this notice.

20. Louisville Gas And Electric Company; Kentucky Utilities Company

[Docket No. ER00–2491–000]

Take notice that on May 15, 2000, Louisville Gas and Electric Company (LG&E)/Kentucky Utilities (KU) (hereinafter Companies) tendered for filing AN executed Netting Agreement between the Companies and DTE Energy Trading.

Comment date: June 5, 2000, in accordance with Standard Paragraph E at the end of this notice.

21. PPL Montana, LLC

[Docket No. ER00–2492–000]

Take notice that on May 15, 2000, PPL Montana, LLC (PPL Montana) filed a Service Agreement dated May 1, 2000 with PPL EnergyPlus, LLC (PPL EnergyPlus) under PPL Montana's Market-Based Rate Tariff, FERC Electric Tariff, Original Volume No. 1. The Service Agreement adds PPL EnergyPlus as an eligible customer under the Tariff.

PPL Montana requests an effective date of May 1, 2000 for the Service Agreement.

PPL Montana states that PPL EnergyPlus has been served with a copy of this filing.

Comment date: June 5, 2000, in accordance with Standard Paragraph E at the end of this notice.

22. Consumers Energy Company

[Docket No. ER00–2496–000]

Take notice that on May 15, 2000, Consumers Energy Company (Consumers) tendered for filing a service agreement for unbundled wholesale power service pursuant to the Consumers' cost-based Power Sales Tariff accepted for filing on September 12, 1997 in Docket No. ER97–964–000 with British Columbia Power Exchange Corporation.

Copies of the filed agreement were served upon the Michigan Public Service Commission and the customer.

Comment date: June 5, 2000, in accordance with Standard Paragraph E at the end of this notice.

23. Entergy Services, Inc.

[Docket No. ER00–2497–000]

Take notice that on May 15, 2000, Entergy Services, Inc., on behalf of Entergy Arkansas, Inc., Entergy Gulf States, Inc., Entergy Louisiana, Inc., Entergy Mississippi, Inc., and Entergy New Orleans, Inc., (collectively, the Entergy Operating Companies) tendered for filing a Long-Term Firm Point-to-Point Transmission Service Agreement Entergy Services, Inc. as agent for the Entergy Operating Companies, and PECO Energy Company—Power Team.

Entergy Services requests that the agreement be made effective no later than May 3, 2000.

Comment date: June 5, 2000, in accordance with Standard Paragraph E at the end of this notice.

24. Golden Spread Electric Cooperative, Inc.

[Docket No. ER00–2498–000]

Take notice that on May 15, 2000, Golden Spread Electric Cooperative, Inc. (Golden Spread) tendered for filing Revisions to its FERC Rate Schedule Nos. 23–33.

Copies of this filing were served upon each of Golden Spread's Member Cooperatives taking service under such rate schedules and the Public Utility Commission of Texas.

Comment date: June 5, 2000, in accordance with Standard Paragraph E at the end of this notice.

25. Deseret Generation & Transmission Co-operative, Inc.

[Docket No. ER00–53–000]

Take notice that on May 15, 2000, Deseret Generation & Transmission Co-operative, Inc. filed an informational filing, attached as Appendix A, providing the exact amount paid as a Supplemental 1999 Rate Rebate to each of its six member cooperatives.

Comment date: June 5, 2000, in accordance with Standard Paragraph E at the end of this notice.

26. NorthWestern Corporation

[Docket No. ES00–35–001]

Take notice that on May 12, 2000, NorthWestern Corporation submitted an amendment to its original application in this proceeding pursuant to Section 204 of the Federal Power Act. The amendment seeks authorization to issue (iii) not more than 1,000,000 shares of its Common Stock, par value $1.75 per share, including related Common Stock Purchase Rights, for its Dividend Reinvestment and Director Stock Purchase Plan; (iv) not more than 100,000 shares of its Common Stock, par value $1.75 per share, including related Common Stock Purchase Rights to be issued for the purpose of making charitable contributions to qualifying organizations; (v) not more than 500,000 shares of its Cumulative Preferred Stock, par value $100 per share; and (vi) not more than 500,000 shares of its Preference Stock, par value $50 per share.

NorthWestern Corporation also requests an exemption from the

Commission's competitive bidding and negotiated placement requirements of 18 CFR 34.2.

Comment date: June 7, 2000, in accordance with Standard Paragraph E at the end of this notice.

Standard Paragraph

E. Any person desiring to be heard or to protest such filing should file a motion to intervene or protest with the Federal Energy Regulatory Commission, 888 First Street, N.E., Washington, D.C. 20426, in accordance with Rules 211 and 214 of the Commission's rules of practice and procedure (18 CFR 385.211 and 385.214). All such motions or protests should be filed on or before the comment date. Protests will be considered by the Commission in determining the appropriate action to be taken, but will not serve to make protestants parties to the proceeding. Any person wishing to become a party must file a motion to intervene. Copies of these filings are on file with the Commission and are available for public inspection. This filing may also be viewed on the Internet at http://www.ferc.fed.us/online/rims.htm (call 202–208–2222 for assistance).

Linwood A. Watson, Jr.,

Acting Secretary.

[FR Doc. 00–13221 Filed 5–25–00; 8:45 am]

BILLING CODE 6717–01–P

DEPARTMENT OF ENERGY

Federal Energy Regulatory Commission

[Docket No. EG00–152–000, et al.]

Lone Star Steel Sales Company, et al.; Electric Rate and Corporate Regulation Filings

May 17, 2000.

Take notice that the following filings have been made with the Commission:

1. Lone Star Steel Sales Company

[Docket No. EG00–152–000]

Take notice that on May 15, 2000, Lone Star Steel Sales Company (LSSS), P.O. Box 803546, Dallas, Texas 75380, filed with the Federal Energy Regulatory Commission an application for determination of exempt wholesale generator status pursuant to part 365 of the Commission's regulations.

LSSS is a Delaware corporation with its principal place of business in Dallas, Texas. LSSS is engaged exclusively in the business of owning or operating an eligible facility selling electric energy at wholesale. The eligible facility consists of 15 MW of gas-fired generation located in Northeast Texas that is entirely within the certificated service area of Southwestern Electric Power Company (SWEPCO).

Comment date: June 7, 2000, in accordance with Standard Paragraph E at the end of this notice. The Commission will limit its consideration of comments to those that concern the adequacy or accuracy of the application.

2. Twelvepole Creek, LLC

[Docket No. EG00–153–000]

Take notice that on May 15, 2000, Twelvepole Creek, LLC, with its principal place of business c/o Columbia Electric Company, 13880 Dulles Corner Lane, Herndon, VA, 20171, filed with the Federal Energy Regulatory Commission an application for determination of exempt wholesale generator status pursuant to Part 365 of the Commission's regulations. Twelvepole Creek, LLC intends to construct, own or lease, and operate an approximately 504 MW natural gas-fired generating facility located in Wayne County, West Virginia. All output from the facility will be sold at wholesale.

Comment date: June 7, 2000, in accordance with Standard Paragraph E at the end of this notice. The Commission will limit its consideration of comments to those that concern the adequacy or accuracy of the application.

3. MidAmerican Energy Company

[Docket No. EL99–92–002]

Take notice that on May 11, 2000, MidAmerican Energy Company (MidAmerican), 666 Grand Avenue, 2900 Ruan Center, Des Moines, Iowa 50309 tendered for filing a Refund Report as required by the March 17, 2000 Letter Order in Docket No. EL99–92–000.

MidAmerican states that the last billings at non-settlement rates were rendered for the month of February 2000 and that all subsequent billings have been based on the settlement rates and charges approved by the Letter Order. MidAmerican further states that interest on the refunds was calculated in accordance with 18 CFR 35.19a and that all refunds with interest required to be paid pursuant to the Letter Order were transmitted electronically to customers on April 28, 2000.

Copies of the filing were served on all parties to Docket Nos. EL99–92–000 and ER99–3887–000.

Comment date: June 12, 2000, in accordance with Standard Paragraph E at the end of this notice.

4. Lyon Rural Electric Cooperative

[Docket No. ES00–34–000]

Take notice that on May 10, 2000, Lyon Rural Electric Cooperative (Lyon) filed an application pursuant to Section 204 of the Federal Power Act seeking authorization to borrow money under a long-term loan agreement in the form of secured promissory notes in an amount not to exceed $2,400,000. Lyon seeks authorization to borrow money under a short-term line of credit agreement in the form of promissory notes in an amount not to exceed $900,000. Lyon requests authorization for the long-term loan agreement and the short-term line of credit over a two-year period commencing June 30, 2000.

Lyon also seeks a waiver of the Commission's competitive bidding and negotiated placement requirements of 18 CFR 34.2 regarding both the long-term loan agreement and the short-term line of credit.

Comment date: June 7, 2000, in accordance with Standard Paragraph E at the end of this notice.

5. Northwestern Corporation

[Docket No. ES00–35–000]

Take notice that on May 8, 2000, Northwestern Corporation filed an application pursuant to Section 204 of the Federal Power Act seeking authorization to issue

(i) not more than 5,000,000 shares of its Common Stock, par value $1.75 per share, including related Common Stock Purchase Rights; and

(ii) not more than $140,000,000 of its mortgage bonds, notes, debentures, subordinated debentures, guarantees or other evidences of indebtedness.

NorthWestern also requests an exemption from the Commission's competitive bidding and negotiated placement requirements of 18 CFR 34.2.

Comment date: June 7, 2000, in accordance with Standard Paragraph E at the end of this notice.

6. Electric Energy, Inc.

[Docket No. ES00–36–000]

Take notice that on May 11, 2000, Electric Energy, Inc. submitted an application pursuant to the Federal Power Act seeking authorization to issue from time to time (a) not more than $120 million of new long-term debt with a maturity of up to 15 years, and (b) new short-term debt in an amount not to exceed $70 million at any time.

Comment date: June 7, 2000, in accordance with Standard Paragraph E at the end of this notice.

7. Kansas Gas and Electric Company

[Docket No. ES00–37–000]

Take notice that on May 11, 2000, Kansas Gas and Electric Company submitted an application pursuant to Section 204 of the Federal Power Act seeking authorization to (1) issue not more than $1 billion of short-term securities on or before December 31, 2002, and (2) pledge first mortgage bonds in an aggregate principal amount not to exceed $1.0 billion at any one time outstanding to secure such short-term indebtedness.

Kansas Gas and Electric Company also requests a waiver from the Commission's competitive bidding and negotiated placement requirements of 18 CFR 34.2 with regards to the issuance of short-term securities.

Comment date: June 7, 2000, in accordance with Standard Paragraph E at the end of this notice.

8. Kansas Gas and Electric Company

[Docket No. ES00–38–000]

Take notice that on May 11, 2000, Kansas Gas and Electric Company submitted an application pursuant to Section 204 of the Federal Power Act seeking authorization to pledge not more than $1 billion of first mortgage bonds and guaranties to secure short-term indebtedness of its parent, Western Resources, Inc.

Comment date: June 7, 2000, in accordance with Standard Paragraph E at the end of this notice.

9. Western Resources, Inc.

[Docket No. ES00–39–000]

Take notice that on May 11, 2000, Western Resources, Inc. submitted an application pursuant to Section 204 of the Federal Power Act seeking authorization to (1) issue not more than $1.5 billion in short-term securities on or before December 31, 2002, and (2) pledge first mortgage bonds in an aggregate principal amount not to exceed $1.5 billion to secure such short-term indebtedness.

Western Resources, Inc. also requests a waiver of the Commission's competitive bidding and negotiated placement requirements of 18 CFR 34.2 with regards to the issuance of short-term securities.

Comment date: June 7, 2000, in accordance with Standard Paragraph E at the end of this notice.

Standard Paragraphs

E. Any person desiring to be heard or to protest such filing should file a motion to intervene or protest with the Federal Energy Regulatory Commission, 888 First Street, NE., Washington, DC 20426, in accordance with Rules 211 and 214 of the Commission's Rules of Practice and Procedure (18 CFR 385.211 and 385.214). All such motions or protests should be filed on or before the comment date. Protests will be considered by the Commission in determining the appropriate action to be taken, but will not serve to make protestants parties to the proceeding. Any person wishing to become a party must file a motion to intervene. Copies of these filings are on file with the Commission and are available for public inspection. This filing may also be viewed on the Internet at http://www.ferc.fed.us/ online/rims.htm (call 202–208–2222 for assistance).

Linwood A. Watson, Jr.,

Acting Secretary.

[FR Doc. 00–13217 Filed 5–25–00; 8:45 am]

BILLING CODE 6717–01–P

DEPARTMENT OF ENERGY

Federal Energy Regulatory Commission

[Docket No. EG00–141–000, et al.]

PSEG Power New York Inc., et al.; Electric Rate and Corporate Regulation Filings

May 19, 2000.

Take notice that the following filings have been made with the Commission:

1. PSEG Power New York Inc.

[Docket No. EG00–141–000]

Take notice that on May 1, 2000, PSEG Power New York Inc. (PSEG New York or Applicant) with its principal office at 80 Park Plaza Newark, New Jersey filed with the Federal Energy Regulatory Commission an application for determination of exempt wholesale generator status pursuant to Part 365 of the Commission's regulations.

PSEG New York is a corporation organized under the laws of the State of Delaware. PSEG New York will be engaged, directly or indirectly through an affiliate as defined in Section 2(a)(11)(B) of the Public Utility Holding Company Act of 1935, exclusively in owning, or both owning and operating a generating facility which consists of four fossil generating units representing a total of approximately 400 MW of generating capacity and incidental facilities located in the Township of Bethlehem, County of Albany, State of New York; selling electric energy at wholesale and engaging in project development activities with respect thereto.

Comment date: June 9, 2000, in accordance with Standard Paragraph E at the end of this notice. The Commission will limit its consideration of comments to those that concern the adequacy or accuracy of the application.

2. CMS Distributed Power L.L.C.

[Docket No. EG00–154–000]

Take notice that on May , 2000, CMS Distributed Power L.L.C., 330 Town Center Drive, Suite 1000, Dearborn, Michigan 48126, filed with the Federal Energy Regulatory Commission an application for determination of exempt wholesale generator status pursuant to Part 365 of the Commission's regulations.

CMS Distributed Power L.L.C. is a Michigan limited liability company and a wholly-owned indirect subsidiary of CMS Energy Corporation, a Michigan corporation. CMS Distributed Power L.L.C. is constructing a diesel powered generating facility in Dearborn, Michigan of approximately 38 megawatts and a diesel powered generating facility in Zilwaukee, Michigan of approximately 40 megawatts.

Comment date: June 9, 2000, in accordance with Standard Paragraph E at the end of this notice. The Commission will limit its consideration of comments to those that concern the adequacy or accuracy of the application.

3. Kansas Gas and Electric Company

[Docket No. ES00–37–001]

Take notice that on May 17, 2000, Kansas Gas and Electric Company submitted an amendment to its original application in this proceeding pursuant to Section 204 of the Federal Power Act. The application is amended so as to define the terms ''short term indebtedness,'' ''securities'' and ''short-term securities'' to mean securities with a maturity date no longer than five years from the date of issuance. The application is further amended so that the final maturity date of the medium-term securities to be issued will be no later than December 31, 2007.

Comment date: June 7, 2000, in accordance with Standard Paragraph E at the end of this notice.

4. Kansas Gas and Electric Company

[Docket No. ES00–38–001]

Take notice that on May 17, 2000, Kansas Gas and Electric Company submitted an amendment to its original application in this proceeding pursuant to Section 204 of the Federal Power Act. The application is amended so as to define the term ''short term indebtedness'' to mean securities with a

maturity date no longer than five years from the date of issuance.

Kansas Gas and Electric Company requested a waiver from the Commission's competitive bidding and negotiated placement requirements of 18 CFR 34.2.

Comment date: June 7, 2000, in accordance with Standard Paragraph E at the end of this notice.

5. Western Resources, Inc.

[Docket No. ES00–39–001]

Take notice that on May 17, 2000, Western Resources, Inc. submitted an amendment to its original application in this proceeding pursuant to Section 204 of the Federal Power Act. The application is amended so as to define the terms ''short term indebtedness,'' ''securities'' and ''short-term securities'' to mean securities with a maturity date no longer than five years from the date of issuance. The application is further amended so that the final maturity date of the medium-term securities to be issued will be no later than December 31, 2007.

Comment date: June 7, 2000, in accordance with Standard Paragraph E at the end of this notice.

6. Rumford Cogeneration Company Limited Partnership

[Docket No. QF86–291–003]

Take notice that on May 16, 2000, Rumford Cogeneration Company Limited Partnership, c/o The Mead Corporation, Courthouse Plaza NE, Dayton, OH 45463, filed with the Federal Energy Regulatory Commission an application for recertification of a facility as a qualifying cogeneration facility pursuant to Section 292.207(b) of the Commission's regulations. No determination has been made that the submittal constitutes a complete filing. The facility is a 95 MW topping-cycle cogeneration facility. It is interconnected with Central Maine Power Company.

The Facility was originally certified as a QF in Docket No. QF86–291–000, Rumford Cogeneration Company, 34 FERC ¶ 62,205 (1986). Rumford also filed Notices of Self-recertification on September 29, 1987, in Docket No. QF86–291–001, and on October 22, 1997 in Docket No. QF86–291–002.

Recertification is sought to reflect the proposed sale of one of the limited partners' interest in the Facility.

Comment date: June 19, 2000, in accordance with Standard Paragraph E at the end of this notice.

7. California Independent System Operator Corporation

[Docket No. ER00–726–000]

Take notice that on May 16, 2000, the California Independent System Operator Corporation (ISO), tendered for filing a revision to the Scheduling Coordinator Agreement (SCA) between the ISO and Puget Sound Energy. The ISO states that the revision modifies the SCA to incorporate a name change for the bank in which Puget Sound Energy maintains its Fed-Wire Transfer account.

The ISO requests that the revision be made effective as of November 18, 1999.

The ISO states that this filing has been served on Puget Sound Energy and the California Public Utilities Commission.

Comment date: June 6, 2000, in accordance with Standard Paragraph E at the end of this notice.

8. Energy East Corporation and CMP Group, Inc.

[Docket No. ER00–2373–001]

Take notice that on May 16, 2000, Central Maine Power Company (CMP), tendered for filing pursuant to Rule 215 of the Rules of Practice and Procedure of the Federal Energy Regulatory Commission, 18 CFR 385.215, amended revised pages to CMP's Open Access Transmission Tariff in compliance with Energy East Corporation and CMP Group, Inc., 91 FERC ¶ 61, 001 (2000).

Comment date: June 6, 2000, in accordance with Standard Paragraph E at the end of this notice.

9. Southwestern Electric Power Company

[Docket No. ER00–2500–000]

Take notice that on May 16, 2000, Southwestern Electric Power Company (SWEPCO), tendered for filing an Interconnection Agreement between SWEPCO and Lone Star Steel Sales Company (Lone Star). The Interconnection Agreement supersedes an Interconnection Agreement between SWEPCO and Lone Star filed July 28, 1999. SWEPCO requests an effective date for the new Interconnection Agreement of May 17, 2000. Accordingly, SWEPCO requests waiver of the Commission's notice requirements.

SWEPCO states that a copy of the filing was served on Lone Star and the Public Utility Commission of Texas.

Comment date: June 6, 2000, in accordance with Standard Paragraph E at the end of this notice.

10. Western Resources, Inc.

[Docket No. ER00–2501–000]

Take notice that on June 6, 2000, Western Resources, Inc. (WR), tendered for filing the Third Amendment to the electric service Contract with the City of Ellinwood, Kansas (Ellinwood), the Third Amendment to the electric service Contract with the City of Larned, Kansas (Larned), the Third Amendment to the electric service Contract with the City of Osage City, Kansas (Osage City), the Third Amendment to the electric Service Contract with the City of Sterling, Kansas (Sterling), and the Second Amendment to the electric service Contract with City of Wamego, Kansas (Wamego).

WR requests an effective date of June 1, 2000 for these rate schedule changes.

Copies of this filing has been served upon the City of Ellinwood, City of Larned, City of Osage City, City of Sterling, City of Wamego, and the Kansas Corporation Commission.

Comment date: June 6, 2000, in accordance with Standard Paragraph E at the end of this notice.

11. Western Resources, Inc.

[Docket No. ER00–2502–000]

Take notice that on May 16, 2000, Western Resources, Inc., tendered for filing Service Schedule WTU–6/2000, which will supercede Service Schedule WTU–3/94. Service Schedule WTU–6/2000 is proposed to be effective as of June 1, 2000. The revisions to Service Schedule WTU–3/94 promotes competition by allowing customers taking service under this schedule to receive credit for alternative competitive resources.

A copy of this filing was served upon the Kansas Corporation Commission and the wholesale customers who take service under the aforementioned Service Schedule.

Comment date: June 6, 2000, in accordance with Standard Paragraph E at the end of this notice.

12. Allegheny Energy Service Corporation, on behalf of Allegheny Energy Supply Company, LLC

[Docket No. ER00–2504–000]

Take notice that on May 16, 2000, Allegheny Energy Service Corporation on behalf of Allegheny Energy Supply Company, LLC (Allegheny Energy Supply), tendered for filing Supplement No. 42 to add one (1) new Customer to the Market Rate Tariff under which Allegheny Energy Supply Company offers generation services; and filed Amendment No. 1 to Supplement No. 42 to incorporate a Netting Agreement with Tractebel Energy Marketing, Inc. into the tariff provisions.

Allegheny Energy Supply requests a waiver of notice requirements to make service available as of April 19, 2000 or

on a date as determined by the Commission to Tractebel Energy Marketing, Inc., and make the Netting Agreement effective as of May 3, 2000 or on a date as determined by the Commission.

Copies of the filing have been provided to the Public Utilities Commission of Ohio, the Pennsylvania Public Utility Commission, the Maryland Public Service Commission, the Virginia State Corporation Commission, the West Virginia Public Service Commission, and all parties of record.

Comment date: June 6, 2000, in accordance with Standard Paragraph E at the end of this notice.

13. Allegheny Energy Service Corporation, on behalf of Monongahela Power Company, The Potomac Edison Company, and West Penn Power Company, (Allegheny Power)

[Docket No. ER00–2505–000]

Take notice that on May 16, 2000, Allegheny Energy Service Corporation on behalf of Monongahela Power Company, The Potomac Edison Company and West Penn Power Company (Allegheny Power), tendered for filing Supplement No. 79 to add Public Service Company of Colorado to Allegheny Power's Open Access Transmission Service Tariff which has been accepted for filing by the Federal Energy Regulatory Commission in Docket No. ER96–58–000.

The proposed effective date under the Service Agreements is May 15, 2000 or a date ordered by the Commission.

Copies of the filing have been provided to the Public Utilities Commission of Ohio, the Pennsylvania Public Utility Commission, the Maryland Public Service Commission, the Virginia State Corporation Commission, and the West Virginia Public Service Commission.

Comment date: June 6, 2000, in accordance with Standard Paragraph E at the end of this notice.

14. PPL Electric Utilities Corporation

[Docket No. ER00–2506–000]

Take notice that on May 16, 2000, PPL Electric Utilities Corporation tendered for filing notice of cancellation of Service Agreement No. 8 under its FERC Electric Tariff Volume No. 1. PPL Utilities requested an effective date of this cancellation of July 17, 2000.

Notice of the proposed cancellation has been served upon Cargill-Alliant, LLC.

Comment date: June 6, 2000, in accordance with Standard Paragraph E at the end of this notice.

15. Central Vermont Public Service Corporation

[Docket No. ER00–2507–000]

Take notice that on May 16, 2000, Central Vermont Public Service Corporation, tendered for filing a modification to its billing procedures under Section 7.1 of its open access Transmission Service Tariff No. 7.

Copies of the filing were served upon Central Vermont's jurisdictional customers, Vermont Public Service Board, New Hampshire Public Utilities Commission, Connecticut Public Utilities Control Department and Massachusetts Public Utilities Commission.

Comment date: June 6, 2000, in accordance with Standard Paragraph E at the end of this notice.

16. Duke Energy Corporation

[Docket No. ER00–2509–000]

Take notice that on May 16, 2000, Duke Energy Corporation (Duke), tendered for filing a Service Agreement with New Energy, Inc. for Non-Transmission Service under Duke's Open Access Transmission Tariff.

Duke requests that the proposed Service Agreement be permitted to become effective on May 2, 2000.

Duke states that this filing is in accordance with Part 35 of the Commission's Regulations and a copy has been served on the North Carolina Utilities Commission.

Comment date: June 6, 2000, in accordance with Standard Paragraph E at the end of this notice.

17. Duke Energy Corporation

[Docket No. ER00–2510–000]

Take notice that on May 16, 2000, Duke Energy Corporation (Duke), tendered for filing a Service Agreement with New Energy, Inc., for Transmission Service under Duke's Open Access Transmission Tariff.

Duke requests that the proposed Service Agreement be permitted to become effective on May 2, 2000.

Duke states that this filing is in accordance with Part 35 of the Commission's Regulations and a copy has been served on the North Carolina Utilities Commission.

Comment date: June 6, 2000, in accordance with Standard Paragraph E at the end of this notice.

18. Duke Energy Corporation

[Docket No. ER00–2511–000]

Take notice that on May 16, 2000, Duke Energy Corporation (Duke), tendered for filing a Service Agreement with Amerada Hess Corporation for Non-Transmission Service under Duke's Open Access Transmission Tariff.

Duke requests that the proposed Service Agreement be permitted to become effective on May 2, 2000.

Duke states that this filing is in accordance with Part 35 of the Commission's Regulations and a copy has been served on the North Carolina Utilities Commission.

Comment date: June 6, 2000, in accordance with Standard Paragraph E at the end of this notice.

19. Duke Energy Corporation

[Docket No. ER00–2512–000]

Take notice that on May 16, 2000, Duke Energy Corporation (Duke), tendered for filing a Service Agreement with Amerada Hess Corporation, for Transmission Service under Duke's Open Access Transmission Tariff.

Duke requests that the proposed Service Agreement be permitted to become effective on May 2, 2000.

Duke states that this filing is in accordance with Part 35 of the Commission's Regulations and a copy has been served on the North Carolina Utilities Commission.

Comment date: June 6, 2000, in accordance with Standard Paragraph E at the end of this notice.

20. Northern Indiana Public Service Company

[Docket No. ER00–2513–000]

Take notice that on May 16, 2000, Northern Indiana Public Service Company tendered for filing an executed Standard Transmission Service Agreement for Non-Firm Point-to-Point Transmission Service between Northern Indiana Public Service Company and Amerada Hess Corporation (Amerada).

Under the Transmission Service Agreement, Northern Indiana Public Service Company will provide Point-to-Point Transmission Service to Amerada pursuant to the Transmission Service Tariff filed by Northern Indiana Public Service Company in Docket No. OA96–47–000 and allowed to become effective by the Commission.

Northern Indiana Public Service Company has requested that the Service Agreement be allowed to become effective as of May 17, 2000.

Copies of this filing have been sent to Amerada, the Indiana Utility Regulatory Commission, and the Indiana Office of Utility Consumer Counselor.

Comment date: June 6, 2000, in accordance with Standard Paragraph E at the end of this notice.

21. TransAlta Centralia Generation LLC

[Docket No. ER00–2514–000]

Take notice that on May 16, 2000, TransAlta Centralia Generation LLC (TACG) tendered for filing, pursuant to Section 205 of the Federal Power Act and Part 35 of the Commission's Rules and Regulations, a Power Purchase and Sale Agreement between TACG and TransAlta Energy Marketing (US) Inc.

Comment date: June 6, 2000, in accordance with Standard Paragraph E at the end of this notice.

22. MidAmerican Energy Company

[Docket No. ER00–2515–000]

Take notice that on May 16, 2000, MidAmerican Energy Company (MidAmerican), tendered for filing with the Commission a Notice of Cancellation of its Service Agreement dated July 21, 1958, between Iowa Power and Light Company (a predecessor company of MidAmerican) and City of Carlisle, Iowa, pursuant to Section 35.15 of the Commission's Regulations. MidAmerican requests that the following rate schedule be canceled effective as of 11:59 p.m. on February 23, 1998. This Agreement has been designated as MidAmerican Rate Schedule No. 32.

MidAmerican requests a waiver of Section 35.15 to the extent that this Notice of Cancellation has not been filed within the time required by such section. MidAmerican inadvertently failed to submit the Notice of Cancellation upon expiration of the agreement. The expired agreement was supplanted by a new agreement, the ''Wholesale Full Requirements Power Sales Agreement'' and has been designated as MidAmerican Rate Schedule Electric Tariff No. 5, Service Agreement No. 24.

MidAmerican has mailed a copy of this filing to City of Carlisle, Iowa, the Iowa Utilities Board, the Illinois Commerce Commission and the South Dakota Public Utilities Commission.

Comment date: June 6, 2000, in accordance with Standard Paragraph E at the end of this notice.

23. Central Maine Power Company

[Docket No. ER00–2017–000]

Take notice that on May 16, 2000, Central Maine Power Company (CMP), tendered for filing an amendment to its Motion To Defer Action (Motion), filed on May 12, 2000, in the above-referenced docket. By the Motion and this amendment, CMP is seeking for the Commission to defer action for forty-five (45) days on an unexecuted service agreement for Firm Local Point-to-Point Transmission and interconnection agreement by and between CMP and Moosehead Energy Inc., submitted in Docket No. ER00–2017–000. CMP states this amendment will allow CMP and Moosehead Energy, Inc., to negotiate executed agreements.

Comment date: June 6, 2000, in accordance with Standard Paragraph E at the end of this notice.

24. Citizens Power Sales LLC, et al

[Docket Nos. ER94–1685–029, ER95–393–027, ER95–892–053, ER95–856–002, ER96–2652–047, ER99–893–005, ER99–892–006, ER99–891–006, ER99–890–006, ER99–4229–003, ER99–4330–001, ER99–4228–003, and ER99–4331–001]

Take notice that on May 12, 2000, Citizens Power Sales LLC, Hartford Power Sales, L.L.C., CL Power Sales One, L.L.C., CL Power Sales Two, L.L.C., CP Power Sales Five, L.L.C., CL Power Sales Six, L.L.C., CL Power Sales Seven, L.L.C., CL Power Sales Eight, L.L.C., CL Power Sales Nine, L.L.C., CL Power Sales Ten, L.L.C., CP Power Sales Twelve, L.L.C., CP Power Sales Thirteen, L.L.C., CP Power Sales Fourteen, L.L.C., CP Power Sales Fifteen, L.L.C., CP Power Sales Seventeen, L.L.C., CP Power Sales Eighteen, L.L.C., CP Power Sales Nineteen, L.L.C., and CP Power Sales Twenty, L.L.C., tendered for filing revised codes of conduct.

Comment date: June 2, 2000, in accordance with Standard Paragraph E at the end of this notice.

Standard Paragraphs

E. Any person desiring to be heard or to protest such filing should file a motion to intervene or protest with the Federal Energy Regulatory Commission, 888 First Street, N.E., Washington, D.C. 20426, in accordance with Rules 211 and 214 of the Commission's Rules of Practice and Procedure (18 CFR 385.211 and 385.214). All such motions or protests should be filed on or before the comment date. Protests will be considered by the Commission in determining the appropriate action to be taken, but will not serve to make protestants parties to the proceeding. Any person wishing to become a party must file a motion to intervene. Copies of these filings are on file with the Commission and are available for public inspection. This filing may also be viewed on the Internet at http://www.ferc.fed.us/online/rims.htm (call 202–208–2222 for assistance).

Linwood A. Watson, Jr.,

Acting Secretary.

[FR Doc. 00–13218 Filed 5–25–00; 8:45 am]

BILLING CODE 6717–01–P

ENVIRONMENTAL PROTECTION AGENCY

[FRL–6705–6]

Agency Information Collection Activities; OMB Responses

AGENCY: Environmental Protection Agency (EPA).

ACTION: Notices.

SUMMARY: This document announces the Office of Management and Budget's (OMB) responses to Agency clearance requests, in compliance with the Paperwork Reduction Act (44 U.S.C. 3501 *et. seq.*). An agency may not conduct or sponsor, and a person is not required to respond to, a collection of information unless it displays a currently valid OMB control number. The OMB control numbers for EPA's regulations are listed in 40 CFR part 9 and 48 CFR Chapter 15.

FOR FURTHER INFORMATION CONTACT: Sandy Farmer at 260–2740,or email at Farmer.sandy@epa.gov,and please refer to the appropriate EPA Information Collection Request (ICR) Number.

SUPPLEMENTARY INFORMATION:

OMB Responses to Agency Clearance Requests

OMB Approvals

EPA ICR No. 1573.06; Part B Permit Application, Permit Modifications, and Special Permits; in 40 CFR parts 264 and 270; was approved 03/31/2000; OMB No. 2050–0009; expires 03/31/2003.

EPA ICR No. 0029.07; National Pollutant Discharge Elimination System (NPDES) Modification and Variance Requests; in 40 CFR parts 122.62 and 122.63; was approved 04/04/2000; OMB No. 2040–0068; expires 04/30/2003.

EPA ICR No. 1560.05; National Water Quality Inventory Reports '' Clean Water Act Sections 305(b), 303(d), 314(a), and 106(e); in 40 CFR part 130.10(2); was approved 04/05/2000; OMB No. 2040–0071; expires 04/30/2003.

EPA ICR No. 0168.07; Pollutant Discharge Elimination System and Sewage Sludge Management State Programs; in 40 CFR parts 122 through 125; was approved 04/10/2000; OMB No. 2040–0057; expires 04/30/2003.

EPA ICR No. 0226.15; Applications for NPDES Discharge Permits and the Sewage Management Permits; in 40 CFR parts 122 through 125, 403, and 501; was approved 04/11/2000; OMB No. 2040–0086; expires 04/30/2003.

EPA ICR No. 1569.04; Approval of State Coastal Non-point Control Program '' CZARA Section 6217; was

approved 04/1/2000; OMB No. 2040–0153; expires 04/30/2003.

EPA ICR No. 1500.04; National Estuary Program; in 40 CFR part 35, subpart P was approved 04/11/2000; OMB No. 2040–0138; expires 04/30/2003.

EPA ICR No. 1727.02; Evaluation of the Burden of Waterborne Disease Within Communities in the United States; was approved 04/20/2000; OMB No. 2080–0050; expires 04/30/2003.

Extensions of Expiration Dates

EPA ICR No. 0276.08; Application for Experimental Use Permit (EUP) to Ship and Use a Pesticide for Experimental Purposes Only; in 40 CFR part 172; OMB No. 2070–0040; on 02/29/2000 OMB extended the expiration date through 05/31/2000.

EPA ICR No. 1780.01; Voluntary Cover Sheet for TSCA Submissions; OMB No. 2070–0156; on 03/30/2000 OMB extended the expiration date through 06/30/2000.

EPA ICR No. 0282.10; Emission Defect Information and Voluntary Emission Recall Reports; in 40 CFR part 85, subpart T, and 40 CFR part 91, subpart I; OMB No. 2060–0048; on 03/30/2000 OMB extended the expiration date through 08/31/2000.

EPA ICR No. 1000.06; Polychlorinated Biphenyls (PCBs) Used in Electrical Equipment; in 40 CFR part 761; OMB No. 2070–0003; on 03/30/2000 OMB extended the expiration date through 09/30/2000.

EPA ICR No. 1796.01; Industrial Combustion Coordinated Rule-making (ICCR) Questionnaire; OMB No. 2060–0355; on 03/30/2000 OMB extended the expiration date through 09/30/2000.

EPA ICR No. 1504.03; Data Generation for Registration Activities; in 40 CFR part 158; OMB No. 2070–0107; on 03/31/2000 OMB extended the expiration date through 05/31/2000.

EPA ICR No. 0597.06; Maximum Residue Limit (MRL) Petitions on Food/Feed Crops and New Inert Ingredients; in 40 CFR parts 177 and 180; OMB No. 2070–0024; on 03/31/2000 OMB extended the expiration date through 06/30/2000.

EPA ICR No. 0922.05; Data Call-in for Special Review Chemicals; in 40 CFR part 158; OMB No. 2070–0057; on 03/31/2000 OMB extended the expiration date through 06/30/2000.

EPA ICR No. 1774.01; Mobile Air Conditioner Retrofitting Program; in 40 CFR part 82; OMB No. 2060–0350; on 04/20/2000 OMB extended the expiration date through 06/30/2000.

Comments Filed

EPA ICR No. 1920.01; Revisions to Regulatory Provisions Governing Permit Issuance for the National Pollutant Discharge Elimination System; on 04/11/2000 OMB filed comment.

EPA ICR No. 0002.10; Revision of Information Request for National Pretreatment Program; in 40 CFR part 403; OMB No. 2040-0009; on 04/10/2000 OMB filed comment.

EPA ICR No. 0229.14; Standards for the use or Disposal of Sewage Sludge—Round 2 Amendments to 40 CFR part 503; OMB No. 2040–0004; on 04/13/2000 OMB filed comment.

Action Withdrawn

ICR No. 1940.01; Health Effects of Particulate Matter and Co-Pollutant Exposures Near the El Paso/Juarez Border Crossings; on 04/25/2000 OMB filed comment.

Dated: May 17, 2000.

Oscar Morales,

Director, Collection Strategies Division.

[FR Doc. 00–13206 Filed 5–25–00; 8:45 am]

BILLING CODE 6560–50–P

ENVIRONMENTAL PROTECTION AGENCY

[FRL–6709–9]

Agency Information Collection Activities: Submission for OMB Review; Comment Request; Revisions to the Information Collection Request (ICR) for the National Water Quality Inventory Reports (Clean Water Act Section 305(b)) and Proposed Revisions to EPA's Regulations Implementing Section 303(d)

AGENCY: Environmental Protection Agency.

ACTION: Notice.

SUMMARY: In compliance with the Paperwork Reduction Act (44 U.S.C. 3501 *et seq.*), this document announces that an ICR for the proposed revisions to the Water Quality Planning and Management Regulation has been forwarded to the Office of Management and Budget (OMB) for review and approval. The ICR describes the nature of the information collection for the proposed regulation and its expected burden and cost. The ICR also revises the expected burden and costs of the current Section 303(d) program and for Section 305(b) reports.

DATES: Comments must be submitted on or before June 26, 2000.

FOR FURTHER INFORMATION CONTACT: For a copy of EPA ICR Number 1560.06 contact Sandy Farmer at the Environmental Protection Agency (EPA) by mail at Collection Strategies Division; U.S. Environmental Protection Agency (2822); 1200 Pennsylvania Ave., NW, Washington, DC 20460, by phone at (202) 260–2740, by email at *farmer.sandy@epa.gov,* or download from the Internet at *http://www.epa.gov/icr.* For technical questions about this ICR, contact Richard Iovanna by phone at (202) 260–5194 or by email at *iovanna.rich@epa.gov.*

SUPPLEMENTARY INFORMATION:

Section 303(d) of the Clean Water Act requires States, Territories, and authorized Tribes to identify and rank waters which do not meet water quality standards following implementation of technology-based controls. Under section 303(d), States, Territories, and authorized Tribes are also required to establish total maximum daily loads (TMDLs) for listed waters not meeting standards as a result of pollutant discharges. In developing the section 303(d) lists, States, Territories, and authorized Tribes are required to consider various sources of water-quality related data and information, including the section 305(b) water quality reports. The section 305(b) reports contain information on the extent of water quality degradation, the pollutants and sources affecting water quality, and progress in controlling water pollution.

The Clean Water Act requires EPA to review and approve or disapprove section 303(d) lists and TMDLs. Currently, there are 56 respondents (the 50 States, the District of Columbia, and the five Territories). Section 303(d) specifically requires States, Territories, and authorized Tribes to develop lists and TMDLs ''from time to time'' and EPA to review and approve or disapprove the lists and the TMDLs. EPA collects section 305(b) reports from 59 respondents (the 50 States, the District of Columbia, five Territories, and 3 River Basin commissions).

The Office of Management and Budget (OMB) previously approved information collection authority for the submission of section 305(b) reports under 40 CFR 130.10(a) of the EPA Water Quality Management Standards under OMB Number 2040–0071. In 1992, OMB approved an addendum to this ICR clarifying the burden associated with preparing section 303(d) lists of waters for inclusion in the section 305(b) reports. OMB reapproved the ICR for the period 1993–1995, 1996–1998, and then again from March 1999–April 2003 (ICR Number 1560.05, approved April 5, 2000).

Today's proposed ICR (ICR Number 1560.06, OMB Number 2040–0071) proposes revisions to the currently approved ICR based on changes EPA proposed to make to the section 303(d) regulations. These revisions would increase the burden to States, Territories, and authorized Tribes for four section 303(d) activities related to preparation of the section 303(d) lists: revising the listing methodology, establishing schedules for TMDL development, increased public participation, and providing the listing methodology in a new format. EPA's currently approved ICR for the period March 1999 through April 2003 was based on the burden to respondents of the current program and did not include consideration of the impact of the proposed regulations. The revisions contained in the revised ICR include the increased section 303(d) listing burden to States, Territories, and authorized Tribes that would result under the proposed regulations.

As required by OMB's Terms of Clearance for the currently approved ICR, the revised ICR includes the respondent burden associated with developing TMDLs. This burden has not been estimated in previous ICRs, but can now be included due to recent advances in EPA's ability to estimate the cost of developing TMDLs. In this ICR, the burden for developing TMDLs is divided into two parts: the burden associated with the current TMDL regulations, and the additional burden associated with the new requirements for the final revisions to the TMDL regulations. The new requirements add two additional TMDL development tasks: preparation of an implementation plan, and written response to public comments regarding the TMDL.

As required by OMB's Terms of Clearance for the currently approved ICR, the revised ICR also estimates the burden to respondents of providing information as required by section 305(b) on the costs and benefits of attaining water quality standards, and the burden to the Agency of providing guidance to respondents for preparing this information. Although this is not a new requirement, the burden of providing this information has not been estimated in previous ICRs, whether based on the effort associated with the current practices of respondents in providing this information or the availability of better guidance for developing this information.

The revised ICR does not include the reduction in respondent burden resulting from the anticipated final regulations' adoption of a 4-year section 303(d) listing cycle instead of the current 2-year section 303(d) listing cycle because the savings (although substantial over time) would likely not be realized for the period covered by this ICR. It also does not include the reduction in respondent burden resulting from EPA's March 27, 2000 rule removing the federal requirement for States to submit their section 303(d) lists in 2000 (skipping this listing cycle) because the timing of the rule's issuance makes it difficult to estimate the extent to which savings occurred.

EPA has concluded that no government information collection activity duplicates the information requested by this revised ICR and, therefore, it has no other way to obtain the information. Therefore, these responses are mandatory. In addition to EPA, environmental groups will most likely use the information collected to assess the actions of States, Territories, and authorized Tribes. Information collected through the proposed activities is not confidential because all respondents are State agencies, Territorial agencies, and Tribes working entirely in a public forum. The proposed information collection activities do not request information of a sensitive nature from the State, Territorial, or Tribal respondents.

The projected average additional cost associated with the revised section 303(d) rule requirements is estimated to be $218,663 per respondent, and the total annual cost for all 56 respondents is estimated to be $12,245,100 . This estimate does not include any of the savings that will accrue to respondents in future years resulting from the Agency's anticipated adoption of a 4-year section 303(d) listing cycle instead of the current 2-year section 303(d) listing cycle. The average current cost associated with developing TMDLs under the current section 303(d) program is estimated to be $7,653,941 per respondent, and the total annual cost for all 56 respondents is estimated to be $128,620,703. The average current cost associated with developing benefit cost information for the section 305(b) biennial reports is estimated to be $1,750, and the total annual cost for all 59 respondents is estimated to be $103,253. The average potential additional cost associated with developing improved benefit cost information for the section 305(b) biennial reports is estimated to be $25,901 per respondent (depending on the level of detail and sophistication of the analyses), and the total annual potential additional cost for all 59 respondents is estimated to be $1,424,891. Overall, the burden associated with the new requirements amounts to a total of 351,504 hours at a cost of $13,669,991 and the burden associated with the current program requirements amounts to a total of 3,309,950 hours at a cost of $128,723,955. Burden means the total time, effort, or financial resources expended by persons to generate, maintain, retain, or disclose or provide information to or for a Federal agency. This includes the time needed to review instructions; develop, acquire, install, and utilize technology and systems for the purposes of collecting, validating, and verifying information, processing and maintaining information, and disclosing and providing information; adjust the existing ways to comply with any previously applicable instructions and requirements; train personnel to be able to respond to a collection of information; search data sources; complete and review the collection of information; and transmit or otherwise disclose the information. An Agency may not conduct or sponsor, and a person is not required to respond to collection of information unless it displays a currently valid OMB control number. The OMB control numbers for EPA's regulations are listed in 40 CFR part 9 and 48 CFR Chapter 15.

Comments are requested on the Agency's need for this information, the accuracy of the provided burden estimates, and any suggested methods for minimizing respondent burden, including through the use of automated collection techniques. Send comments on the ICR to the Director, Collection Strategies Division; U.S. Environmental Protection Agency (2822); 1200 Pennsylvania Ave., NW, Washington, DC 20460; and to the Office of Information and Regulatory Affairs, Office of Management and Budget, 725 17th St., NW, Washington, DC 20503, marked ''Attention: Desk Officer for EPA.'' Include the ICR number in any correspondence. Since OMB is required to make a decision concerning the ICR between 30 and 60 days after May 26, 2000, a comment to OMB is best assured of having its full effect if OMB receives it by June 26, 2000. The final rule will respond to any OMB or public comments on the information collection requirements contained in this proposal.

Dated: May 19, 2000

Robert H. Wayland III,

Director, Office of Wetlands, Oceans and Watersheds.

[FR Doc. 00–13441 Filed 5–25–00; 8:45 am]

BILLING CODE 6560–50–P

ENVIRONMENTAL PROTECTION AGENCY

[OH137–1a; FRL–6705–3]

Adequacy Status of Cincinnati, Ohio Submitted Ozone Maintenance Plan Budgets for Transportation Conformity Purposes

AGENCY: Environmental Protection Agency (EPA).

ACTION: Notice of adequacy.

SUMMARY: In this document, EPA is notifying the public that EPA has found that the motor vehicle emissions budgets in the Cincinnati, Ohio ozone maintenance plan submitted on December 22, 1999, are adequate for conformity purposes. On March 2, 1999, the D.C. Circuit Court ruled that submitted State Implementation Plans (SIPs) cannot be used for conformity determinations until EPA has affirmatively found them adequate. As a result of our finding, Cincinnati can use the motor vehicle emissions budgets for the year 2010 from the submitted ozone maintenance plan for future conformity determinations. These budgets are effective June 12, 2000.

FOR FURTHER INFORMATION CONTACT: The finding and the response to comments already received will be available at EPA's conformity website: *http://www.epa.gov/oms/traq*, (once there, click on the ''Conformity'' button, then look for ''Adequacy Review of SIP Submissions for Conformity'').

Patricia Morris, Environmental Scientist, Regulation Development Section (AR–18J), Air Programs Branch, Air and Radiation Division, United States Environmental Protection Agency, Region 5, 77 West Jackson Boulevard, Chicago, Illinois 60604, (312) 353–8656, morris.patricia@epa.gov.

SUPPLEMENTARY INFORMATION:

Background

Throughout this document, whenever ''we,'' ''us'' or ''our'' is used, we mean EPA. Today's document is simply an announcement of a finding that we have already made. EPA Region 5 sent a letter to the Ohio Environmental Protection Agency on April 27, 2000, stating that the motor vehicle emissions budgets in the Cincinnati, Ohio submitted ozone maintenance plan for 2010 are adequate. This finding will also be announced on EPA's conformity website: *http://www.epa.gov/oms/traq*, (once there, click on the ''Conformity'' button, then look for ''Adequacy Review of SIP Submissions for Conformity'').

Transportation conformity is required by section 176(c) of the Clean Air Act. EPA's conformity rule requires that transportation plans, programs, and projects conform to state air quality implementation plans and establishes the criteria and procedures for determining whether or not they do. Conformity to a SIP means that transportation activities will not produce new air quality violations, worsen existing violations, or delay timely attainment of the national ambient air quality standards.

The criteria by which we determine whether a SIP's motor vehicle emission budgets are adequate for conformity purposes are outlined in 40 CFR 93.118(e)(4). Please note that an adequacy review is separate from EPA's completeness review, and it also should not be used to prejudge EPA's ultimate approval of the SIP. Even if we find a budget adequate, the SIP could later be disapproved.

We've described our process for determining the adequacy of submitted SIP budgets in guidance (May 14, 1999 memo titled ''Conformity Guidance on Implementation of March 2, 1999 Conformity Court Decision''). We followed this guidance in making our adequacy determination.

Authority: 42 U.S.C. 7401–7671q.

Dated: May 5, 2000.

Norman Niedergang,

Acting Regional Administrator, Region 5.

[FR Doc. 00–13203 Filed 5–25–00; 8:45 am]

BILLING CODE 6560–50–P

ENVIRONMENTAL PROTECTION AGENCY

[ER–FRL–6607–5]

Environmental Impact Statements; Notice of Availability

Responsible Agency: Office of Federal Activities, General Information (202) 564–7167 or www.epa.gov/oeca/ofa.

Weekly receipt of Environmental Impact Statements

Filed May 15, 2000 Through May 19, 2000

Pursuant to 40 CFR 1506.9.

EIS No. 000146, Final EIS, USA, HI, Schofield Barracks Wastewater Treatment Plant (WWTP), Effluent Treatment and Disposal, NPDES Permit and COE Section 404 Permit, City of County of Honolulu, Oahu, HI, Due: June 26, 2000, Contact: William Eng (703) 428–7078.

EIS No. 000147, Draft EIS, AFS, ID, East Beaver and Miner's Creek Timber Sales and Prescribed Burning Project, Implementation, Caribou-Targhee National Forest, Dubois Ranger District, Clark County, ID, Due: July 10, 2000, Contact: John Councilman (208) 374–5422.

EIS No. 000148, Draft EIS, FHW, MO, US Route 65/US Route 36 in Livingston County, Transportation Improvements, Funding and COE Section 404 Permit, Livingston County, MO, Due: July 10, 2000, Contact: Carole Hopkins (573) 526–6680.

EIS No. 000149, Draft EIS, FHW, TX, Grand Parkway (TX–99) Segment C, Construction from US 59 to TX 288, Funding and Right-of-Way Requirements, City of Houston, Fort Bend and Brazoria Counties, TX, Due: July 13, 2000, Contact: John Mack (512) 916–5516.

EIS No. 000150, Draft EIS, AFS, CA, 64-Acre Tract Intermodal Transit Center, Construction and Operation, Lake Tahoe Basin Management Unit, Tahoe City, Placer County, CA, Due: July 21, 2000, Contact: Joe Oden (530) 573–2653.

EIS No. 000151, Final EIS, FHW, FL, FL–423 (John Young Parking), Improvements from FL–50 to FL–434, City of Orlando, Orange County, FL, Due: June 26, 2000, Contact: Mark Bartlett (850) 942–9650.

EIS No. 000152, Draft EIS, RUS, KY, Jackson County Lake Project, Implementation, To Provide Adequate Water Supplies for the Projected Residential, Commercial and Industrial Needs, Funding and Possible COE Section 10 and 404 Permits, Jackson County, KY, Due: July 10, 2000, Contact: Mark S. Plank (202) 720–1649.

EIS No. 000153, Draft EIS, FTA, NY, East Side Access Project, Improve Access to Manhattan's East Side for Commuters in the Long Island Transportation Corridor (LITC), MTA Long Island Rail Road (LIRR), Funding, Nassau, Suffolk, New York, Queens and Bronx Counties, NY, Due: July 12, 2000, Contact: Anthony G. Carr (212) 668–2175.

EIS No. 000154, Draft EIS, GSA, MA, U.S. Courthouse Springfield, Construction, Hampden County, MA, Due: July 11, 2000, Contact: Frank Saviano (617) 565–5494.

EIS No. 000155, Draft EIS, AFS, MT, Discovery Ski Area Expansion, Implementation, Special-Use-Permit and COE Section 404 Permit, Beaverhead-Deerlodge National Forest, Pintler Ranger District, Rumsey Mountain, Granite County, MT, Due: July 10, 2000, Contact: Bob Gilman (406) 859–3211.

EIS No. 000156, Final EIS, AFS, WY, ID, Targhee National Forest Plan Oil and Gas Leasing Analysis, Implementation, Bonneville, Butte,

Clark, Fremont and Madison Counties, ID and Teton County, WY, Due: June 26, 2000, Contact: Wally Bunnell (208) 624–3151.

Amended Notices

EIS No. 000141, Draft EIS, AFS, Forest Service Roadless Area Conservation, Implementation, Proposal to Protect Roadless Areas, In addition, the Agency is proposing special consideration for the Tongass National Forest, Due: July 17, 2000, Contact: Scott Conroy (703) 605–5299. Revision of FR notice published on 05/19/2000: CEQ Comment Date corrected from 07/03/2000 to 07/17/2000.

Dated: May 23, 2000.

Joseph C. Montgomery,

Director, NEPA Compliance Division, Office of Federal Activities.

[FR Doc. 00–13303 Filed 5–25–00; 8:45 am]

BILLING CODE 6560–50–U

ENVIRONMENTAL PROTECTION AGENCY

[ER–FRL–6607–6]

Environmental Impact Statements and Regulations; Availability of EPA Comments

Availability of EPA comments prepared May 08, 2000 Through May 12, 2000 pursuant to the Environmental Review Process (ERP), under Section 309 of the Clean Air Act and Section 102(2)(c) of the National Environmental Policy Act as amended. Requests for copies of EPA comments can be directed to the Office of Federal Activities at (202) 574–7167. An explanation of the ratings assigned to draft environmental impact statements (EISs) was published in FR dated April 14, 2000 (65 FR 20157).

Draft EISs

ERP No. D–AFS–F65026–MN

Rating EC2, Gunflint Corridor Fuel Reduction, Implementation, Superior National Forest, Gunflint Ranger District, Cook County, MN.

Summary: EPA expressed environmental concerns regarding potential adverse impacts to air and water quality.

ERP No. D-AFS-J65313–CO

Rating EC2, White River National Forest, Revised Land and Resource Management Plan, Implementation, Eagle, Garfield, Gunnison, Mesa, Moffat and Pitkin Counties, CO.

Summary: EPA expressed environmental concerns that the impacts of unplanned, user-created travelways on the Forest were not fully evaluated and disclosed and the analysis of ski-based resorts and aerial travel corridors contained conflicting and misleading information. EPA suggests that the watershed analysis include information from the most recent watershed assessments. EPA supports the preferred alternative as best meeting the purpose and need for both the Forest and Travel Management Plans.

ERP No. D-AFS-L65346–OR

Rating LO, Triangle Land Exchange Project, Between Clearwater Land Exchange Oregon (Clearwater) an Oregon Partnership, Implementation, Malheur, Umatilla and Wallowa-Whitman National Forests, Baker, Grant, Harney and Wallowa Counties, OR.

Summary: EPA expressed lack of objections.

ERP No. D–AFS–L65351–ID

Rating EC2, East Slate Project, Harvesting Timber, Implementation, Idaho Panhandle National Forests, St. Joe Ranger District, Shoshone County, ID.

Summary: EPA expressed environmental concerns regarding impacts to water quality from roads and proposed harvest activities. EPA suggests that the EIS describe whether restoration efforts contingent on funding are incorporated into the effects analysis and that a monitoring plan to determine extent of temperature impacts to salmonid be included.

Final EISs

ERP No. F–AFS–J65295–MT

Clancy-Unionville Vegetation Manipulation and Travel Management Project, Implementation, Helena National Forest, Helena Ranger District, Lewis and Clark and Jefferson Counties, MT.

Summary: EPA did not object to the preferred alternative, but expressed environmental concerns regarding the level of aquatic and hydrologic monitoring proposed by the BLM and Forest Service. EPA suggests that quantitative emissions for PM10 from prescribed burning be disclosed for each alternative.

ERP No. F–OSM–E61047–TN

Fall Creek Falls Petition Evaluation Document, Implementation, Designate the Land as Unsuitable for Surface Coal Mining Operation, Van Buren and Bledsoe Counties, TN.

Summary: EPA supports the less damaging alternative that ensures protection of Park land viewsheds and protects three of the five watersheds that were threatened by mine expansion while permitting mining in previously degraded Piney Creek and Dry Fork.

Dated: May 23, 2000.

Joseph C. Montgomery,

Director, NEPA Compliance Division, Office of Federal Activities.

[FR Doc. 00–13304 Filed 5–25–00; 8:45 am]

BILLING CODE 6560–50–U

ENVIRONMENTAL PROTECTION AGENCY

[FRL–6705–5]

Gulf of Mexico Program Focus Team Meeting

AGENCY: Environmental Protection Agency (EPA).

ACTION: Notice of meeting of the Gulf of Mexico Program (GMP) focus teams.

SUMMARY: Under the Federal Advisory Act, Public Law 92463, EPA gives notice of a comprehensive meeting of GMP Focus Teams (Public Health, Nutrient Enrichment, Habitat, and Nonindigenous Species).

DATES: The Comprehensive Meeting will be held on Tuesday, June 20, 2000, from 10 p.m. to 5 p.m. and on Wednesday, June 21, 2000, from 9 a.m. to 4 p.m.

ADDRESSES: The meeting will be held at the Hilton New Orleans Riverside, Poydras at the Mississippi River, New Orleans, LA (504) 561–0500.

FOR FURTHER INFORMATION CONTACT: Gloria D. Car, Designated Federal Officer, Gulf of Mexico Program Office, Building 1103, Room 202, Stennis Space Center, MS 39529–6000 at (228) 688–2421.

SUPPLEMENTARY INFORMATION: Proposed agenda items will include: Focus Team Development of FY2001 Performance Goal Recommendations and Supporting Strategies, Overview of FY2000 Workplan Process and Accomplishments, Briefing on FY2001 Workplan Schedule, and Review of Focus Team Roles and Responsibilities.

The meeting is open to the public.

Dated: May 17, 2000.

Gloria D. Car,

Designated Federal Officer.

[FR Doc. 00–13201 Filed 5–25–00; 8:45 am]

BILLING CODE 6560–50–P

ENVIRONMENTAL PROTECTION AGENCY

[OPP–00661; FRL–6589–2]

State FIFRA Issues Research and Evaluation Group (SFIREG) Water Quality/Pesticide Disposal Working Committee Meeting; Notice of Public Meeting

AGENCY: Environmental Protection Agency (EPA).

ACTION: Notice of public meeting.

SUMMARY: The State FIFRA Issues Research and Evaluation Group (SFIREG) Water Quality/Pesticide Disposal Working Committee will hold a 2-day meeting, beginning on June 12, 2000, and ending on June 13, 2000. This notice announces the location and times for the meeting and sets forth the tentative agenda topics.

DATES: The meeting will be held on Monday, June 12, 2000, from 8:30 a.m. to 5 p.m. and Tuesday, June 13, 2000, from 8:30 a.m. to noon.

ADDRESSES: The meeting will be held at Doubletree Hotel, 300 Army Navy Drive, Arlington—Crystal City, VA.

FOR FURTHER INFORMATION CONTACT: Philip H. Gray, SFIREG Executive Secretary, P.O. Box 1249, Hardwick, VT 05843–1249; telephone number: (802) 472–6956; fax: (802) 472–6957; e-mail address: aapco@plainfield.bypass.com or Georgia A. McDuffie, Field and External Affairs Division (7506C), Office of Pesticide Programs, Environmental Protection Agency, 1200 Pennsylvania Avenue, NW., Washington, DC 20405; telephone number: (703) 605–0195; fax number: (703) 308–1850; e-mail address: McDuffie.Georgia@epa.gov.

SUPPLEMENTARY INFORMATION:

I. Does this Action Apply to Me?

This action is directed to the public in general, but all parties interested in SFIREG's information exchange relationship with EPA regarding important issues related to human health, environmental exposure to pesticides, and insight into EPA's decision-making process are invited and encouraged to attend the meetings and participate as appropriate.

II. How Can I Get Additional Information, Including Copies of this Document and Other Related Documents?

1. *Electronically*. You may obtain electronic copies of this document, and certain other related documents that might be available electronically, from the EPA Internet Home Page at http://www.epa.gov/. To access this document, on the Home Page select ''Laws and Regulations'' and then look up the entry for this document under the ''**Federal Register**—Environmental Documents.'' You can also go directly to the **Federal Register** listings at http://www.epa.gov/fedrgstr/. You may also obtain electronic copies of the minutes, and certain other related documents that might be available electronically from the Association of American Pesticide Control Officials (AAPCO) Internet Home Page at http://aapco.ceris.purdue.edu/doc/index.html. To access this document, on the Home Page select ''SFIREG Meetings.''

2. *By mail*. Philip H. Gray, SFIREG Executive Secretary, P.O. Box 1249, Hardwick, VT 05843–1249.

III. Purpose of Meeting

Tentative Agenda:

1. Revising EPA guidance document for the Pesticide Management Plan rule.
2. Probabilistic risk assessment for ecological effects.
3. State regulation of aquatic use pesticides.
4. Up-date on Total Maximum Daily Load (TMDL) activities in California.
5. Report on certain herbicides in surface and ground water in the Midwest.
6. Topics for Pesticide Regulatory Education Program (PREP) course on water quality.
7. General program up-dates from the Office Pesticide Programs (OPP) and the Office of Enforcement and Compliance Assurance (OECA).
8. Other topics as appropriate.

List of Subjects

Environmental protection.

Dated: May 19, 2000.

Jay Ellenberger,

Acting Director, Field and External Affairs Division, Office of Pesticide Programs.

[FR Doc. 00–13314 Filed 5–25–00; 8:45 am]

BILLING CODE 6560–50–F

ENVIRONMENTAL PROTECTION AGENCY

[OPP–30496; FRL–6559–5]

Pesticide Products; Registration Applications

AGENCY: Environmental Protection Agency (EPA).

ACTION: Notice.

SUMMARY: This notice announces receipt of applications to register pesticide products containing new active ingredients not included in any previously registered products pursuant to the provisions of section 3(c)(4) of the Federal Insecticide, Fungicide, and Rodenticide Act (FIFRA), as amended.

DATES: Written comments, identified by the docket control number OPP–30496, must be received on or before June 26, 2000.

ADDRESSES: Comments may be submitted by mail, electronically, or in person. Please follow the detailed instructions for each method as provided in Unit I. of the ''SUPPLEMENTARY INFORMATION.'' To ensure proper receipt by EPA, it is imperative that you identify docket control number OPP–30496 in the subject line on the first page of your response.

FOR FURTHER INFORMATION CONTACT: By mail: Thomas C. Harris, Registration Division (7505C), Office of Pesticide Programs, Environmental Protection Agency, Ariel Rios Bldg., 1200 Pennsylvania Ave., NW., Washington, DC 20460. Office location, telephone number, and e-mail address: Rm. 213, CM #2, 1921 Jefferson Davis Hwy., Arlington, VA 22202; telephone number: 703–308–9423; e-mail: harris.thomas@epa.gov.

SUPPLEMENTARY INFORMATION:

I. General Information

A. Does this Action Apply to Me?

You may be affected by this action if you are an agricultural producer, food manufacturer, or pesticide manufacturer. Potentially affected categories and entities may include, but are not limited to:

Categories	NAICS codes	Examples of potentially affected entities
Industry	111 112 311 32532	Crop production Animal production Food manufacturing Pesticide manufacturing

This listing is not intended to be exhaustive, but rather provides a guide for readers regarding entities likely to be affected by this action. Other types of entities not listed in the table could also be affected. The North American Industrial Classification System (NAICS) codes have been provided to assist you and others in determining whether or not this action might apply to certain entities. If you have questions regarding the applicability of this action to a particular entity, consult the person listed under ''FOR FURTHER INFORMATION CONTACT.''

B. How Can I Get Additional Information, Including Copies of this Document and Other Related Documents?

1. *Electronically*. You may obtain electronic copies of this document, and certain other related documents that might be available electronically, from the EPA Internet Home Page at http://www.epa.gov/. To access this document, on the Home Page select ''Laws and Regulations'' and then look up the entry for this document under the ''**Federal Register**—Environmental Documents.'' You can also go directly to the **Federal Register** listings at http://www.epa.gov/fedrgstr/.

2. *In person*. The Agency has established an official record for this action under docket control number OPP–30496. The official record consists of the documents specifically referenced in this action, any public comments received during an applicable comment period, and other information related to this action, including any information claimed as confidential business information (CBI). This official record includes the documents that are physically located in the docket, as well as the documents that are referenced in those documents. The public version of the official record does not include any information claimed as CBI. The public version of the official record, which includes printed, paper versions of any electronic comments submitted during an applicable comment period, is available for inspection in the Public Information and Records Integrity Branch (PIRIB), Rm. 119, Crystal Mall #2, 1921 Jefferson Davis Hwy., Arlington, VA, from 8:30 a.m. to 4 p.m., Monday through Friday, excluding legal holidays. The PIRIB telephone number is (703) 305–5805.

C. How and to Whom Do I Submit Comments?

You may submit comments through the mail, in person, or electronically. To ensure proper receipt by EPA, it is imperative that you identify docket control number OPP–30496 in the subject line on the first page of your response.

1. *By mail*. Submit your comments to: Public Information and Records Integrity Branch (PIRIB), Information Resources and Services Division (7502C), Office of Pesticide Programs (OPP), Environmental Protection Agency, Ariel Rios Bldg., 1200 Pennsylvania Ave., NW., Washington, DC 20460.

2. *In person or by courier*. Deliver your comments to: Public Information and Records Integrity Branch (PIRIB), Information Resources and Services Division (7502C), Office of Pesticide Programs (OPP), Environmental Protection Agency, Rm. 119, Crystal Mall #2, 1921 Jefferson Davis Highway, Arlington, VA. The PIRIB is open from 8:30 a.m to 4 p.m., Monday through Friday, excluding legal holidays. The PIRIB telephone number is (703) 305–5805.

3. *Electronically*. You may submit your comments electronically by e-mail to: ''opp-docket@epa.gov,'' or you can submit a computer disk as described above. Do not submit any information electronically that you consider to be CBI. Avoid the use of special characters and any form of encryption. Electronic submissions will be accepted in WordPerfect 6.1/8.0 or ASCII file format. All comments in electronic form must be identified by docket control number OPP–30496. Electronic comments may also be filed online at many Federal Depository Libraries.

D. How Should I Handle CBI that I Want to Submit to the Agency?

Do not submit any information electronically that you consider to be CBI. You may claim information that you submit to EPA in response to this document as CBI by marking any part or all of that information as CBI. Information so marked will not be disclosed except in accordance with procedures set forth in 40 CFR part 2. In addition to one complete version of the comment that includes any information claimed as CBI, a copy of the comment that does not contain the information claimed as CBI must be submitted for inclusion in the public version of the official record. Information not marked confidential will be included in the public version of the official record without prior notice. If you have any questions about CBI or the procedures for claiming CBI, please consult the person identified under ''FOR FURTHER INFORMATION CONTACT.''

E. What Should I Consider as I Prepare My Comments for EPA?

You may find the following suggestions helpful for preparing your comments:

1. Explain your views as clearly as possible.

2. Describe any assumptions that you used.

3. Provide copies of any technical information and/or data you used that support your views.

4. If you estimate potential burden or costs, explain how you arrived at the estimate that you provide.

5. Provide specific examples to illustrate your concerns.

6. Offer alternative ways to improve the registration activity.

7. Make sure to submit your comments by the deadline in this notice.

8. To ensure proper receipt by EPA, be sure to identify the docket control number assigned to this action in the subject line on the first page of your response. You may also provide the name, date, and **Federal Register** citation.

II. Registration Applications

EPA received applications as follows to register pesticide products containing active ingredients not included in any previously registered products pursuant to the provision of section 3(c)(4) of FIFRA. Notice of receipt of these applications does not imply a decision by the Agency on the applications.

Products Containing Active Ingredients Not Included in Any Previously Registered Products

1. File Symbol: 48210–G. Applicant: Sankyo Co., Ltd., c/o Rockwell Enterprises, Inc., 1720 Savannah Dr., NE, Rio Rancho, NM 87124–5700. Product Name: Milbemectin Technical Miticide/Insecticide. Active ingredient: Milbemectin (≥ 70% milbemycin A_4 and ≤ 30% milbemycin A_3) at 97.0%. Proposed classification/Use: Formulation into miticide/insecticide for application to pome fruits group, citrus fruits group, strawberries, ornamentals, and non-bearing fruit trees.

2. File Symbol: 48210–U. Applicant: Sankyo Co., Ltd., c/o Rockwell Enterprises, Inc., 1720 Savannah Dr., NE, Rio Rancho, NM 87124–5700. Product Name: Milbeknock EC Miticide/Insecticide. Active ingredient: Milbemectin (≥ 70% milbemycin A_4 and ≤ 30 milbemycin A_3) at 1.0%. Proposed classification/Use: Miticide/insecticide for application to pome fruits group, citrus fruits group, strawberries, ornamentals, and non-bearing fruit trees.

Authority: 7 U.S.C. 136.

List of Subjects

Environmental protection, Pesticides and pest.

Dated: May 17, 2000.

Peter Caulkins,

Acting Director, Registration Division, Office of Pesticide Programs.

[FR Doc. 00–13312 Filed 5–25–00; 8:45 am]

BILLING CODE 6560–50–F

ENVIRONMENTAL PROTECTION AGENCY

[OPP–42077; FRL–6488–6]

Delaware State Plan for Certification of Applicators of Restricted Use Pesticides; Notice of Availability

AGENCY: Environmental Protection Agency (EPA).

ACTION: Notice of intent.

SUMMARY: The State of Delaware has submitted to EPA several statutory, regulatory, and programmatic amendments to its State Plan for Certification and Training of Applicators of Restricted Use Pesticides. The proposed amendments establish new requirements for the certification and recertification of pesticide applicators, requires training for registration of non-certified employees, adopts EPA's requirements for direct supervision, adds new commercial subcategories, and establishes the payment of fees for commercial applicators, issuance of business licenses, and dealer permits. Notice is hereby given of the intention of the Regional Administrator, Region III, to approve the revised Plan for the Certification of Applicators of Restricted Use Pesticides. EPA is soliciting comments on the proposed amendments.

DATES: Comments, identified by docket control number OPP–42077, must be received on or before July 10, 2000.

ADDRESSES: Comments may be submitted by mail, electronically, or in person. Please follow the detailed instructions for each method as provided in Unit I. of the **SUPPLEMENTARY INFORMATION**. To ensure proper receipt by EPA, it is imperative that you identify docket control number OPP–42077 in the subject line on the first page of your response.

FOR FURTHER INFORMATION CONTACT: Clara Fuentes, Pesticides/Asbestos Programs and Enforcement Branch (3WC32), Environmental Protection Agency, Region III, 1650 Arch St., Philadelphia, PA 19103–2029; telephone number: 215–814–3453; fax number: 215–814–3114; e-mail address: fuentes.clara@epa.gov.

SUPPLEMENTARY INFORMATION:

I. General Information

A. Does this Action Apply to Me?

This action is directed to the public in general. This action may, however, be of interest to those involved in agriculture and anyone involved with the distribution and application of pesticides for agricultural purposes. Others involved with pesticides in a non-agricultural setting may also be affected. In addition, it may be of interest to others, such as, those persons who are or may be required to conduct testing of chemical substances under the Federal Food, Drug, and Cosmetic Act (FFDCA), or the Federal Insecticide, Fungicide, and Rodenticide Act (FIFRA). Since other entities may also be interested, the Agency has not attempted to describe all the specific entities that may be affected by this action. If you have any questions regarding the applicability of this action to a particular entity, consult the person listed under **FOR FURTHER INFORMATION CONTACT**.

B. How Can I Get Copies of the Amended State Plan, Other Related Documents, and Additional Information?

To obtain copies of the amended Delaware Certification Plan, other related documents, or additional information contact:

1. Clara Fuentes at the address listed under **FOR FURTHER INFORMATION CONTACT**.

2. Larry Towel, Delaware Department of Agriculture, Pesticides Compliance, 2320 Dupont Highway, Dover, DE 19901; telephone number: 302–697–6287; e-mail address: larry@smtp.dda.state.de.us.

3. John MacDonald, Office of Pesticides Program, Field and External Affairs Division (7506C), Environmental Protection Agency, Ariel Rios Bldg., 1200 Pennsylvania Ave., NW.; telephone number: 703–305–7370; e-mail address: macdonald.john@epa.gov.

C. How and to Whom Do I Submit Comments?

You may submit comments through the mail, in person, or electronically to Clara Fuentes at the address listed under **FOR FURTHER INFORMATION CONTACT**. To ensure proper receipt by EPA, it is imperative that you identify docket control number OPP–42077 in the subject line on the first page of your response. Electronic comments can be submitted by e-mail or you can submit a computer disk. When submitting comments electronically do not submit any information that you consider to be CBI. Avoid the use of special characters and any form of encryption. Electronic submissions will be accepted in WordPerfect 6.1/8.0 or ASCII file format. All comments in electronic form must be identified by docket control number OPP–42077.

D. How Should I Handle CBI that I Want to Submit to the Agency?

Do not submit any information electronically that you consider to be CBI. You may claim information that you submit to EPA in response to this document as CBI by marking any part or all of that information as CBI. Information so marked will not be disclosed except in accordance with procedures set forth in 40 CFR part 2. In addition to one complete version of the comment that includes any information claimed as CBI, a copy of the comment that does not contain the information claimed as CBI must be submitted for inclusion in the public version of the official record. Information not marked confidential will be included in the public version of the official record without prior notice. If you have any questions about CBI or the procedures for claiming CBI, please consult the person identified under **FOR FURTHER INFORMATION CONTACT**.

E. What Should I Consider as I Prepare My Comments for EPA?

You may find the following suggestions helpful for preparing your comments:

1. Explain your views as clearly as possible.

2. Describe any assumptions that you used.

3. Provide copies of any technical information and/or data you used that support your views.

4. If you estimate potential burden or costs, explain how you arrived at the estimate that you provide.

5. Provide specific examples to illustrate your concerns.

6. Make sure to submit your comments by the deadline in this notice.

7. To ensure proper receipt by EPA, be sure to identify the docket control number assigned to this action in the subject line on the first page of your response. You may also provide the name, date, and **Federal Register** citation.

II. What Action is the Agency Taking?

EPA has reviewed the revised Delaware Certification Plan and finds it in compliance with FIFRA and 40 CFR part 171 and is announcing its intention to appprove the amended plan and seeks public comment.

List of Subjects

Environmental protection.

Dated: May 16, 2000.

Bradley M. Campbell,

Regional Administrator, Region III.

[FR Doc. 00–13315 Filed 5–25–00; 8:45 am]

BILLING CODE 6560–50–F

ENVIRONMENTAL PROTECTION AGENCY

[PF–937A; FRL–6588–6]

Vinclozolin, Notice of Filing; Availability of Supplemental Information

AGENCY: Environmental Protection Agency (EPA).

ACTION: Notice.

SUMMARY: EPA is announcing the availability of its summary of the toxicity and human health risk associated with the notice of filing of the pesticide petition (PP) (OF6079), which proposes the establishment of tolerances for residues of the fungicide vinclozolin in or on the raw agricultural commodities succulent beans and canola.

DATES: Comments, identified by docket control number PF–937A, must be received by EPA on or before June 4, 2000.

ADDRESSES: Comments may be submitted by mail, electronically, or in person. Please follow the detailed instructions for each method as provided in Unit I. of the ''SUPPLEMENTARY INFORMATION.'' To ensure proper receipt by EPA, it is imperative that you identify docket control number PF–937A in the subject line on the first page of your response.

FOR FURTHER INFORMATION CONTACT: Mary L. Waller, Registration Division (7505C), Office of Pesticide Programs, Environmental Protection Agency, 1200 Pennsylvania Ave., NW., Washington, DC 20460; telephone number: (703) 308–9354; e-mail address: waller.mary@epa.gov.

SUPPLEMENTARY INFORMATION:

I. General Information

A. Does this Action Apply to Me?

This action is directed to the public in general, nevertheless, a wide range of stakeholders will be interested in this risk summary for vinclozolin, including environmental, human health, and agricultural advocates; the chemical industry; pesticide users; and members of the public interested in the use of pesticides on food. As such, the Agency has not attempted to specifically describe all the entities potentially affected by this action. If you have any questions regarding the applicability of this action to a particular entity, consult the person listed under ''FOR FURTHER INFORMATION CONTACT.''

B. How Can I Get Additional Information, Including Copies of this Document or Other Related Documents?

1. *Electronically.* You may obtain electronic copies of this document and other related documents from the EPA Internet Home Page at http://www.epa.gov/. To access this document, on the Home Page select ''Laws and Regulations'' and then look up the entry for this document under the ''**Federal Register**—Environmental Documents.'' You can also go directly to the **Federal Register** listings at http://www.epa.gov/fedrgstr/.

2. *In person.* The Agency has established an official record for this action under docket control numbers PF–937A. The official record consists of the documents specifically referenced in this action, any public comments received during an applicable comment period, and other information related to this action, including any information claimed as CBI. This official record includes the documents that are physically located in the docket, as well as the documents that are referenced in those documents. The public version of the official record does not include any information claimed as CBI. The public version of the official record, which includes printed, paper versions of any electronic comments submitted during an applicable comment period, is available for inspection in Rm. 119, Crystal Mall #2, 1921 Jefferson Davis Hwy., Arlington, VA, from 8:30 a.m. to 4 p.m., Monday through Friday, excluding legal holidays. The PIRIB telephone number is (703) 305–5805.

C. How and to Whom Do I Submit Comments?

You may submit comments through the mail, in person, or electronically. To ensure proper receipt by EPA, it is imperative that you identify docket control number PF–937A in the subject line on the first page of your response.

1. *By mail.* Submit comments to: Public Information and Records Integrity Branch, Information Resources and Services Division (7502C), Office of Pesticide Programs, Environmental Protection Agency, 1200 Pennsylvania Ave., NW., Washington, DC 20460.

2. *In person or by courier.* Deliver comments to: Public Information and Records Integrity Branch, Information Resources and Services Division, Office of Pesticide Programs, Environmental Protection Agency, Rm. 119, Crystal Mall #2, 1921 Jefferson Davis Hwy., Arlington, VA. The PIRIB is open from 8:30 a.m. to 4 p.m., Monday through Friday, excluding legal holidays. The PIRIB telephone number is (703) 305–5805.

3. *Electronically.* Submit electronic comments by e-mail to: ''opp-docket@epa.gov,'' or you can submit a computer disk as described in this unit. Do not submit any information electronically that you consider to be CBI. Electronic comments must be submitted as an ASCII file, avoiding the use of special characters and any form of encryption. Comments and data will also be accepted on standard computer disks in WordPerfect 6.1/8.0 or ASCII file format. All comments in electronic form must be identified by the docket control number PF–937A. Electronic comments may also be filed online at many Federal Depository Libraries.

D. How Should I Handle CBI Information that I Want to Submit to the Agency?

Do not submit any information electronically that you consider to be CBI. You may claim information that you submit to EPA in response to this document as CBI by marking any part or all of that information as CBI. Information so marked will not be disclosed except in accordance with procedures set forth in 40 CFR part 2. In addition to one complete version of the comment that includes any information claimed as CBI, a copy of the comment that does not contain the information claimed as CBI must be submitted for inclusion in the public version of the official record. Information not marked confidential will be included in the public version of the official record without prior notice. If you have any questions about CBI or the procedures for claiming CBI, please consult the person listed under ''FOR FURTHER INFORMATION CONTACT.''

II. What Action is EPA Taking in this Notice?

The notice of filing proposing the establishment of tolerances for the residues of the fungicide vinclozolin in or on succulent beans and canola was published in the **Federal Register** on April 21, 2000 (65 FR 21427) (FRL–6555–6). The supplemental information to that notice of filing has been placed in the public version of the official record under docket control number PF–937A for public viewing. Due to the availability of this additional information the Agency is extending the closing of the comment period for the notice of filing from May 21, 2000 to June 4, 2000.

The notice of filing represented the view of the petitioner concerning the toxicity and risk associated with the establishment of these tolerances. The supplemental information contains the Agency's summary of the toxicity and risk associated with the establishment of these tolerances. This document has been developed to provide the public with the Agency's current risk characterization for vinclozolin and to provide an opportunity, through this notice, for interested parties to provide written comments to the Agency on the chemical, vinclozolin.

List of Subjects

Environmental protection, Chemicals, Pesticides and pests.

Dated: May 12, 2000.

James J. Jones,

Director, Registration Division, Office of Pesticide Programs.

[FR Doc. 00–12649 Filed 5–25–00; 8:45 am]

BILLING CODE 6560–50–F

ENVIRONMENTAL PROTECTION AGENCY

[FRL–6705–8]

Proposed CERCLA Prospective Purchaser Agreement for the Former O'Shux Golf Course, Adjacent to the Copley Square Plaza Superfund Site

AGENCY: Environmental Protection Agency (EPA).

ACTION: Proposal of CERCLA Prospective Purchaser Agreement for the former O'Shux Golf Course as part of the settlement of the Copley Square Plaza Superfund Site.

SUMMARY: In accordance with the comprehensive Environmental Response, Compensation, and Liability Act of 1980 (CERCLA), 42 U.S.C. 9601 *et seq.,* as amended by the Superfund Amendments and Reauthorization Act of 1986 (SARA), Public Law 99–499, notice is hereby given that a proposed prospective purchaser agreement (PPA) for the former O'Shux Golf Course adjacent to the Copley Square Plaza Superfund Site (Site) located in Copley, Ohio, has been executed by Ameri-Con Inc. The proposed PPA has been submitted to the Attorney General for approval. The proposed PPA would resolve certain potential claims of the United States under sections 106 and 107 of CERCLA, 42 U.S.C. 9606 and 9607, against Ameri-Con Inc. and Ameri-Con Copley, Ltd. The proposed PPA will not pay any money directly to the United States, but is part of a larger settlement by which the United States stands to recover just under 50% of its outstanding response costs incurred at the Site. The Site is not on the National Priorities List.

DATES: Comments on the proposed PPA must be received by U.S. EPA on or before June 26, 2000.

ADDRESSES: A copy of the proposed PPA is available for review at U.S. EPA, Region 5, 77 West Jackson Boulevard, Chicago, Illinois 60604. Please contact Kathleen Schnieders at (312) 353–8912, prior to visiting the Region 5 office.

Comments on the proposed PPA should be addressed to Kathleen Schnieders, Office of Regional Counsel, U.S. EPA, Region 5, 77 West Jackson Boulevard (Mail Code C–14J), Chicago, Illinois 60604.

FOR FURTHER INFORMATION CONTACT: Kathleen Schnieders at (312) 353–8912, of the U.S. EPA Region 5 Office of Regional Counsel.

A 30-day period, commencing on the date of publication of this notice, is open for comments on the proposed PPA. Comments should be sent to the addressee identified in this notice.

Richard C. Karl,

Acting Director, Superfund Division, Region 5.

[FR Doc. 00–13198 Filed 5–25–00; 8:45 am]

BILLING CODE 6560–50–M

ENVIRONMENTAL PROTECTION AGENCY

[FRL–6705–9]

Proposed CERCLA Administrative Cost Recovery Settlement; Hoxie Flying Service, Inc., Hoxie, Sheridan County, Kansas

AGENCY: Environmental Protection Agency (EPA).

ACTION: Notice; request for public comment.

SUMMARY: In accordance with section 122(h) of the Comprehensive Environmental Response, Compensation, and Liability Act, as amended (''CERCLA''), 42 U.S.C. 9622(h), notice is hereby given of a proposed administrative settlement for recovery of past response costs concerning the Hoxie Superfund Crash Site, Hoxie, Sheridan County, Kansas, with the following settling party: Hoxie Flying Service, Inc. The settlement requires the settling party to pay $89,500 to the Hazardous Substance Superfund over a period of five years, plus interest at the current rate specified for interest on investments of the Hazardous Substance Superfund (5.3%) established by 26 U.S.C. 9507. The settlement agreement includes a covenant not to sue the settling party pursuant to section 107(a) of CERCLA, 42 U.S.C. 9607(a). An employee of Hoxie Flying Services, Inc. crashed into the roof of a residence located at the Site while carrying a full load of methyl parathion. EPA removed contaminated portions of the structure and contaminated soils surrounding the residence and then restored the property in cooperation with the home owner's insurance company. The home owner's insurance company has reimbursed $10,000 of EPA's total costs of $134,398.54. For thirty (30) days following the date of publication of this notice, the Agency will receive written comments relating to the settlement. The Agency will consider all comments received and may modify or withdraw its consent to the settlement if comments received disclose facts or considerations which indicate that the settlement is inappropriate, improper, or inadequate. The Agency's response to any comments received will be available for public inspection at the Sheridan County Library, 801 Royal Avenue, Hoxie, Kansas 67740, and Office of Regional Hearing Clerk, EPA, 901 North 5th Street, Kansas City, KS 66101.

DATES: Comments must be submitted on or before June 26, 2000.

ADDRESSES: The proposed settlement providing additional background information relating to the settlement is available for public inspection at Office of Regional Hearing Clerk, Environmental Protection Agency, 901 N. 5th Street, Kansas City, KS 66101. A copy of the proposed settlement may be obtained from Kathy Robinson, Regional Hearing Clerk, EPA, 901 N. 5th Street, Kansas City, KS 66101, telephone 913–551–7567. Comments should reference the Hoxie Superfund Crash Site, Hoxie, Sheridan County, Kansas, Docket No. CERCLA 7–2000–0018, and should be addressed to Regional Hearing Clerk, EPA, 901 N. 5th Street, Kansas City, KS 66101.

FOR FURTHER INFORMATION CONTACT: James D. Stevens, Assistant Regional Counsel, EPA, 901 N. 5th Street, Kansas City, KS 66101, telephone: 913–551–7322.

Dated: May 15, 2000.

William Rice,

Acting Regional Administrator, Region 7.

[FR Doc. 00–13204 Filed 5–25–00; 8:45 am]

BILLING CODE 6560–50–P

FEDERAL EMERGENCY MANAGEMENT AGENCY

[FEMA–1326–DR]

Maine; Amendment No. 1 to Notice of a Major Disaster Declaration

AGENCY: Federal Emergency Management Agency (FEMA).

ACTION: Notice.

SUMMARY: This notice amends the notice of a major disaster for the State of Maine, (FEMA–1326–DR), dated April 28, 2000, and related determinations.

EFFECTIVE DATE: May 18, 2000.

FOR FURTHER INFORMATION CONTACT: Madge Dale, Response and Recovery Directorate, Federal Emergency Management Agency, Washington, DC 20472, (202) 646–3772.

SUPPLEMENTARY INFORMATION: The notice of a major disaster for the State of Maine is hereby amended to include the following area among those areas determined to have been adversely affected by the catastrophe declared a major disaster by the President in his declaration of April 28, 2000:

Piscataquis County for Public Assistance

(The following Catalog of Federal Domestic Assistance Numbers (CFDA) are to be used for reporting and drawing funds: 83.537, Community Disaster Loans; 83.538, Cora Brown Fund Program; 83.539, Crisis Counseling; 83.540, Disaster Legal Services Program; 83.541, Disaster Unemployment Assistance (DUA); 83.542, Fire Suppression Assistance; 83.543, Individual and Family Grant (IFG) Program; 83.544, Public Assistance Grants; 83.545, Disaster Housing Program; 83.548, Hazard Mitigation Grant Program)

Robert J. Adamcik,

Deputy Associate Director, Response and Recovery Directorate.

[FR Doc. 00–13325 Filed 5–25–00; 8:45 am]

BILLING CODE 6718–02–P

FEDERAL EMERGENCY MANAGEMENT AGENCY

[FEMA–3154–EM]

New Mexico; Amendment No. 2 to Notice of an Emergency Declaration

AGENCY: Federal Emergency Management Agency (FEMA).

ACTION: Notice.

SUMMARY: This notice amends the notice of an emergency for the State of New Mexico, (FEMA–3154–EM), dated May 10, 2000, and related determinations.

EFFECTIVE DATE: May 19, 2000.

FOR FURTHER INFORMATION CONTACT: Madge Dale, Response and Recovery Directorate, Federal Emergency Management Agency, Washington, DC 20472, (202) 646–3772.

SUPPLEMENTARY INFORMATION: Notice is hereby given that the incident period for the emergency declaration has been reopened. The incident period is May 5, 2000 and continuing.

(The following Catalog of Federal Domestic Assistance Numbers (CFDA) are to be used for reporting and drawing funds: 83.537, Community Disaster Loans; 83.538, Cora Brown Fund Program; 83.539, Crisis Counseling; 83.540, Disaster Legal Services Program; 83.541, Disaster Unemployment Assistance (DUA); 83.542, Fire Suppression Assistance; 83.543, Individual and Family Grant (IFG) Program; 83.544, Public Assistance Grants; 83.545, Disaster Housing Program; 83.548, Hazard Mitigation Grant Program)

Lacy E. Suiter,

Executive Associate Director, Response and Recovery Directorate.

[FR Doc. 00–13323 Filed 5–25–00; 8:45 am]

BILLING CODE 6718–02–P

FEDERAL EMERGENCY MANAGEMENT AGENCY

[FEMA–1329–DR]

New Mexico; Amendment No. 2 to Notice of a Major Disaster Declaration

AGENCY: Federal Emergency Management Agency (FEMA).

ACTION: Notice.

SUMMARY: This is a notice of the Presidential declaration of a major disaster for the State of New Mexico (FEMA–1329–DR), dated May 13, 2000, and related determinations.

EFFECTIVE DATE: May 19, 2000.

FOR FURTHER INFORMATION CONTACT: Madge Dale, Response and Recovery Directorate, Federal Emergency Management Agency, Washington, DC 20472, (202) 646–3772.

SUPPLEMENTARY INFORMATION: The notice of a major disaster for the State of New Mexico is hereby amended to include Public Assistance for the following area among those areas determined to have been adversely affected by the catastrophe declared a major disaster by the President in his declaration of May 13, 2000. Act (42 U.S.C. 5121 *et seq.*), as follows:

Los Alamos County for Public Assistance (previously designated for Individual Assistance)

The following Catalog of Federal Domestic Assistance Numbers (CFDA) are to be used for reporting and drawing funds: 83.537, Community Disaster Loans; 83.538, Cora Brown Fund Program; 83.539, Crisis Counseling; 83.540, Disaster Legal Services Program; 83.541, Disaster Unemployment Assistance (DUA); 83.542, Fire Suppression Assistance; 83.543, Individual and Family Grant (IFG) Program; 83.544, Public Assistance Grants; 83.545, Disaster Housing Program; 83.548, Hazard Mitigation Grant Program.

Lacy E. Suiter,

Executive Associate Director, Response and Recovery Directorate.

[FR Doc. 00–13324 Filed 5–25–00; 8:45 am]

BILLING CODE 6718–02–P

FEDERAL EMERGENCY MANAGEMENT AGENCY

Open Meeting, Technical Mapping Advisory Council

AGENCY: Federal Emergency Management Agency (FEMA).

ACTION: Notice of meeting.

SUMMARY: In accordance with § 10(a)(2) of the Federal Advisory Committee Act, 5 U.S.C. App. 1, the Federal Emergency Management Agency gives notice that the following meeting will be held:

NAME: Technical Mapping Advisory Council.

DATE OF MEETING: June 1–2, 2000.

PLACE: Federal Emergency Management Agency, Region III Office, Liberty Square Bldg., 2nd Floor, 105 S. Seventh Street, Philadelphia, PA 19106–3316.

TIMES: 8:30 a.m. to 5 p.m., both days.

PROPOSED AGENDA:

1. Call to Order and Announcements.
2. Action on Minutes of Previous Meetings.
3. Discussion of Final Annual Report.
4. New Business.
5. Adjournment.

STATUS: This meeting is open to the public.

FOR FURTHER INFORMATION CONTACT: Michael K. Buckley, P.E., Federal Emergency Management Agency, 500 C Street SW., room 421, Washington, DC 20472, telephone (202) 646–2756 or by facsimile at (202) 646–4596.

SUPPLEMENTARY INFORMATION: This meeting is open to the public with limited seating available on a first-come, first-served basis. Members of the general public who plan to attend the meeting should contact Ms. Sally P. Magee, Federal Emergency Management Agency, 500 C Street SW., room 442, Washington, DC 20472, telephone (202) 646–8242 or by facsimile at (202) 646–4596 on or before May 29, 2000.

Minutes of the meeting will be prepared and will be available upon request 30 days after they have been approved by the next Technical Mapping Advisory Council meeting.

Dated: May 22, 2000.

Michael J. Armstrong,

Associate Director for Mitigation.

[FR Doc. 00–13326 Filed 5–25–00; 8:45 am]

BILLING CODE 6718–04–P

FEDERAL RESERVE SYSTEM

Formations of, Acquisitions by, and Mergers of Bank Holding Companies

The companies listed in this notice have applied to the Board for approval, pursuant to the Bank Holding Company Act of 1956 (12 U.S.C. 1841 *et seq.*) (BHC Act), Regulation Y (12 CFR part 225), and all other applicable statutes and regulations to become a bank holding company and/or to acquire the assets or the ownership of, control of, or the power to vote shares of a bank or bank holding company and all of the banks and nonbanking companies owned by the bank holding company, including the companies listed below.

The applications listed below, as well as other related filings required by the Board, are available for immediate inspection at the Federal Reserve Bank indicated. The application also will be available for inspection at the offices of the Board of Governors. Interested persons may express their views in writing on the standards enumerated in the BHC Act (12 U.S.C. 1842(c)). If the proposal also involves the acquisition of a nonbanking company, the review also includes whether the acquisition of the nonbanking company complies with the standards in section 4 of the BHC Act (12 U.S.C. 1843). Unless otherwise noted, nonbanking activities will be conducted throughout the United States. Additional information on all bank holding companies may be obtained from the National Information Center website at www.ffiec.gov/nic/.

Unless otherwise noted, comments regarding each of these applications must be received at the Reserve Bank indicated or the offices of the Board of Governors not later than June 19, 2000.

A. Federal Reserve Bank of New York (Betsy Buttrill White, Senior Vice President) 33 Liberty Street, New York, New York 10045–0001:

1. Australia and New Zealand Banking Group Limited, Melbourne, Australia; to become a bank holding company by acquiring 100 percent of the voting shares of Amerika Samoa Bank, Pago Pago, American Samoa.

B. Federal Reserve Bank of Chicago (Phillip Jackson, Applications Officer) 230 South LaSalle Street, Chicago, Illinois 60690–1414:

1. Lafayette Community Bancorp, Lafayette, Indiana; to become a bank holding company by acquiring 100 percent of the voting shares of Lafayette Community Bank (in organization), Lafayette, Indiana.

C. Federal Reserve Bank of St. Louis (Randall C. Sumner, Vice President) 411 Locust Street, St. Louis, Missouri 63166–2034:

1. Arvest Bank Group, Inc., Bentonville, Arkansas, and its subsidiary, First Bancshares, Incorporated, Bartlesville, Oklahoma; to retain 100 percent of the voting shares of State Bank and Trust, Tulsa, Oklahoma, following it's conversion to a state chartered bank.

2. Heritage Group, Inc., Aurora, Nebraska; to acquire 100 percent of the voting shares of City National Bank and Trust Company, Hastings, Nebraska.

Board of Governors of the Federal Reserve System, May 22, 2000.

Robert deV. Frierson,

Associate Secretary of the Board.

[FR Doc. 00–13255 Filed 5–25–00; 8:45 am]

BILLING CODE 6210–01–P

FEDERAL RESERVE SYSTEM

Change in Bank Control Notices; Acquisitions of Shares of Banks or Bank Holding Companies

The notificants listed below have applied under the Change in Bank Control Act (12 U.S.C. 1817(j)) and § 225.41 of the Board's Regulation Y (12 CFR 225.41) to acquire a bank or bank holding company. The factors that are considered in acting on the notices are set forth in paragraph 7 of the Act (12 U.S.C. 1817(j)(7)).

The notices are available for immediate inspection at the Federal Reserve Bank indicated. The notices also will be available for inspection at the offices of the Board of Governors. Interested persons may express their views in writing to the Reserve Bank indicated for that notice or to the offices of the Board of Governors. Comments must be received not later than June 9, 2000.

A. Federal Reserve Bank of Cleveland (Paul Kaboth, Banking Supervision) 1455 East Sixth Street, Cleveland, Ohio 44101–2566:

1. Gary Arthur Rubel and Nancy Sue Rubel, both of Englewood, Florida; to acquire voting shares of CNB Bancorp, Inc., Woodsfield, Ohio, and thereby indirectly acquire voting shares of Citizens National Bank of Woodsfield, Woodsfield, Ohio.

Board of Governors of the Federal Reserve System, May 22, 2000.

Robert deV. Frierson,

Associate Secretary of the Board

[FR Doc. 00–13256 Filed 5–25–00; 8:45 am]

BILLING CODE 6210–01–P

FEDERAL RESERVE SYSTEM

Notice of Proposals To Engage in Permissible Nonbanking Activities or To Acquire Companies That Are Engaged in Permissible Nonbanking Activities

The companies listed in this notice have given notice under section 4 of the Bank Holding Company Act (12 U.S.C. 1843) (BHC Act) and Regulation Y, (12 CFR Part 225) to engage *de novo*, or to acquire or control voting securities or assets of a company, including the companies listed below, that engages either directly or through a subsidiary or other company, in a nonbanking activity that is listed in § 225.28 of Regulation Y (12 CFR 225.28) or that the Board has determined by Order to be closely related to banking and permissible for bank holding companies. Unless otherwise noted, these activities will be conducted throughout the United States.

Each notice is available for inspection at the Federal Reserve Bank indicated. The notice also will be available for inspection at the offices of the Board of Governors. Interested persons may express their views in writing on the question whether the proposal complies with the standards of section 4 of the BHC Act. Additional information on all bank holding companies may be obtained from the National Information Center website at www.ffiec.gov/nic/.

Unless otherwise noted, comments regarding the applications must be received at the Reserve Bank indicated or the offices of the Board of Governors not later than June 9, 2000.

A. Federal Reserve Bank of Kansas City (D. Michael Manies, Assistant Vice President) 925 Grand Avenue, Kansas City, Missouri 64198–0001:

1. First Gothenburg Bancshares, Inc., Gothenburg, Nebraska; Nebraska Bankshares, Inc., Gothenburg, Nebraska; and Stamford Banco, Inc., Stamford, Nebraska; to acquire First Gothenburg Bancshares, Inc., Gothenburg, Nebraska, through Cook Management, Inc., Gothenburg, Nebraska, and thereby engage in general insurance activities in a town of less than 5,000 in population, pursuant to § 225.28(b)(11)(iii) of Regulation Y.

Board of Governors of the Federal Reserve System, May 22, 2000.

Robert deV. Frierson,

Associate Secretary of the Board.

[FR Doc. 00–13257 Filed 5–25–00; 8:45 am]

BILLING CODE 6210–01–P

FEDERAL RESERVE SYSTEM

[Docket No. R–1037]

Modifying Federal Reserve ACH Deposit Deadlines and Pricing Practices Relative to Private-Sector ACH Operators

AGENCY: Board of Governors of the Federal Reserve System.

ACTION: Notice.

SUMMARY: Based on comments received in response to its request for comment last year, the Board has concluded that the Federal Reserve Banks' deposit deadlines and pricing practices for automated clearing house (ACH) transactions exchanged with private-sector ACH operators should be modified. The Board is considering specific modifications to these deadlines and pricing practices, which could be implemented as early as mid-2001, and requests comment on these proposed modifications.

DATES: Comments must be submitted on or before July 25, 2000.

ADDRESSES: Comments, which should refer to Docket No. R–1037, may be mailed to Ms. Jennifer J. Johnson, Secretary, Board of Governors of the Federal Reserve System, 20th and C Streets, NW., Washington, DC 20551 or mailed electronically to regs.comments@federalreserve.gov. Comments addressed to Ms. Johnson also may be delivered to the Board's mail room between 8:45 a.m. and 5:15 p.m. and to the security control room outside of those hours. Both the mail room and the security control room are accessible from the courtyard entrance on 20th Street between Constitution Avenue and C Street, NW. Comments may be inspected in Room MP–500 between 9 a.m. and 5 p.m. weekdays, pursuant to § 261.12, except as provided in § 261.14, of the Board's Rules Regarding Availability of Information, 12 CFR 261.12 and 261.14.

FOR FURTHER INFORMATION CONTACT: Jack K. Walton II, Manager (202/452–2660); Michele Braun, Project Leader (202/452–2819); or Jeffrey S.H. Yeganeh, Senior Financial Services Analyst (202/728–5801); for the hearing impaired *only*, contact Janice Simms, Telecommunication Device for the Deaf (202/872–4984).

SUPPLEMENTARY INFORMATION:

I. Background

The Federal Reserve Banks are collectively the largest ACH operator and process more than 80 percent of commercial interbank ACH transactions. Private-sector ACH operators (PSOs) process the remaining transactions and typically provide services, including processing and settling ACH transactions, similar to those offered by the Reserve Banks. PSOs also rely on the Reserve Banks' ACH services for the delivery and settlement of some transactions in which either the originating depository financial institution (ODFI) or receiving depository financial institution (RDFI) is not their customer.

The Reserve Banks' authority to provide payment services is limited by law to services provided to depository institutions.[1] The Reserve Banks, however, allow depository institutions to send or receive their ACH transactions through intermediaries, such as PSOs, and treat those intermediaries as agents of the depository institutions they serve. Nevertheless, all depository institutions are currently subject to the same Reserve Bank prices and service guidelines regardless of how they send or receive their ACH transactions to and from the Reserve Banks.

Some industry representatives have expressed concerns that the Reserve Banks' price and service level policies have created barriers to open and vigorous competition among ACH operators because the policies do not recognize the role played by operators in the ACH system.[2] Specifically, these representatives have maintained that the Reserve Banks' deposit deadlines and price structure do not permit the PSOs to compete effectively in the provision of ACH services to depository institutions.

The Federal Reserve Board recognizes the benefits of competition in the provision of payment services. In a 1990 white paper on the Federal Reserve in the payments system, the Board stated that ''the role of the Federal Reserve in providing payments services is to promote the integrity and efficiency of the payments mechanism and to ensure the provision of payment services to all depository institutions on an equitable basis, and to do so in an atmosphere of competitive fairness.''[3] In addition, the Board's standards for priced services activities note that ''Federal Reserve actions are implemented in a manner that ensures fairness to other providers of payment services.''[4]

In response to the industry's concerns, the Board requested comment last year on the benefits and drawbacks of modifying the Reserve Banks' deposit deadlines and pricing practices for ACH transactions exchanged with PSOs (64 FR 27793, May 21, 1999). Specifically, the Board requested comment on whether the Reserve Banks should (1) modify their deposit deadlines and processing schedules, (2) modify their pricing structure for interoperator transactions, and (3) limit any modifications to PSOs only.

II. Summary of Comments

The Board received fifty-eight responses to its request for comment.[5] Thirty-two commenters supported and twenty-six commenters opposed modifications to the Reserve Banks' deposit deadlines and pricing practices. Those supporting modifications generally tended to be larger depository institutions and ACH associations that believed modifications would improve competition in the provision of ACH services. Those opposing modifications generally tended to be smaller or medium-sized depository institutions that believed any modifications would lead to higher Reserve Bank fees, which in turn would make them less able to compete in the market for origination services with institutions that use PSO ACH services. Given the diversity in the commenters' views, Board staff invited commenters to a meeting in December 1999 to discuss interoperator issues more fully and to explore alternative approaches to addressing these issues.[6]

A. Deposit Deadlines

The Board requested comment on the benefits and drawbacks of the Reserve

[1] Reserve Banks may also provide services to a limited set of other institutions, such as state member banks that are not defined as depository institutions. Further, the Reserve Banks may provide services to other entities if directed to do so as fiscal agent of the United States.

[2] ACH Vision 2000 Task Force Recommendations, NACHA, 1997; The Role of the Federal Reserve and the Banking Industry in the Retail Electronic Payments Systems of the Future, The Bankers Roundtable, April 1998.

[3] The Federal Reserve in the Payments System, Federal Reserve Regulatory Service 7–139.

[4] Standards Related to Priced-Services Activities of the Federal Reserve Banks, Federal Reserve Regulatory Service 7–136.

[5] The Board received seventeen comments from small banks and thrifts, fourteen comments from national and regional banks, nine comments from ACH associations and clearinghouses, seven comments from credit unions, five comments from Reserve Banks, three comments from private-sector operators, and three comments from consultants, law firms, and corporate associations.

[6] This summary of comments reflects commenters' formal responses to the request for comment as well as the views expressed at the December 1999 meeting.

Banks establishing different deposit and delivery deadlines for PSOs and depository institutions. PSOs maintain that they are unable to offer competitive deposit deadlines and delivery schedules to their customers because they are subject to the same deposit deadlines and delivery schedules that Reserve Banks offer to depository institutions.

Commenters suggested a number of solutions to address this issue. One suggestion was that the Reserve Banks could offer PSOs later deposit and earlier delivery deadlines to enable PSOs, in turn, to offer competitive deadlines to their customers. Another potential solution was for the industry to adopt a uniform interoperator deposit deadline at which all operators would deposit transactions with one another. Other commenters, however, advocated the status quo because they did not believe that Reserve Bank deadlines place PSOs at a competitive disadvantage.

B. Pricing Structure

The Board also requested comment on the benefits and drawbacks of the Reserve Banks modifying their pricing structure for interoperator transactions. PSOs maintain that the Reserve Banks' current pricing structure has placed them at a competitive disadvantage. Specifically, the main concern regarding the Reserve Banks' current pricing structure is the asymmetry in the ability of operators to charge each other's customers. The Reserve Banks consider both the ODFI and RDFI in an interoperator transaction to be their customers and charge both accordingly. PSOs, on the other hand, can only charge their own customer in an interoperator transaction. Some commenters also expressed concern about the Reserve Banks' ability to charge monthly account servicing fees to all depository institutions, including those that send or receive all their ACH transactions through PSOs.

Some commenters suggested that the Reserve Banks should modify their pricing structure for interoperator transactions such that they assess fees only to their direct customers. Commenters also suggested that the Reserve Banks should abolish the monthly account servicing fee for depository institutions that send and receive all of their ACH transactions through a PSO. Commenters believed that these suggested modifications would eliminate the asymmetry noted earlier and would result in a similar customer pricing structure for Reserve Banks and PSOs in which each operator would charge its direct customer only. Other commenters were concerned that any modifications to the Reserve Banks' pricing structure could result in an increase in fees to Reserve Bank customers that do not use the services of a PSO and, thus, opposed any change to the current pricing structure.

C. Eligibility

The Board also requested comment on whether any modifications to the Reserve Banks' deadlines and pricing structure should be limited to ACH operators or extended to other intermediaries, such as third-party processors and correspondents. Specifically, because many of the characteristics that distinguish ACH operators from other intermediaries do not affect how Reserve Banks provide ACH services, the Board was interested whether all intermediaries should be eligible for modified deadlines and pricing. Further, the Board requested comment on whether the Reserve Banks should rely on the National Automated Clearing House Association's (NACHA) ACH operator definition if they were to limit modifications to ACH operators.

Some commenters suggested that only ACH operators should be eligible for modified deadlines and pricing. These commenters noted that Reserve Banks compete with ACH operators in the provision of ACH operator services and, thus, only ACH operators should be eligible for any modifications. These commenters also stated that the Reserve Banks should use NACHA's ACH operator definition to determine eligibility for modified deadlines and pricing rather than develop their own definition. Other commenters, however, suggested that if the Reserve Banks' ACH processing is not affected by the type of intermediary from which they receive transactions or to which they deliver transactions, then all intermediaries should be eligible for modified deadlines and pricing.

III. Enhancing Competition

The Board has carefully considered the commenters' views and has concluded that the Reserve Banks' deposit deadlines and pricing structure for ACH transactions exchanged with private-sector ACH operators should be modified. The Board believes that adopting certain deadline and pricing modifications for interoperator transactions would enhance competition in the provision of ACH operator services to depository institutions.

To determine what modifications might be appropriate to enhance competition in the market for ACH operator services, the Reserve Banks examined the types of services PSOs receive from the Reserve Banks when they send transactions to depository institutions through the Reserve Banks. Similarly, the Reserve Banks examined the types of services they receive from PSOs when they send transactions to depository institutions through PSOs.

First, an operator provides other operators' customers with access to depository institutions on its network. Each of these networks essentially is comprised of telecommunications links that permit the transmission of ACH files between participating depository institutions and the operator. While each operator's network might employ different technologies with different levels of complexity, the costs associated with these networks are primarily fixed. For interoperator transactions, the ability to access depository institutions on other networks allows an operator (1) to forego the costs associated with establishing a direct connection to all depository institutions and (2) to provide its own customers with the ability to send ACH transactions to any depository institution. Thus, when an operator provides other operators' customers with access to a depository institution on its network, it provides value to those customers and the operators that serve them.

Second, an operator processes transactions it receives from other operators and delivers those transactions to depository institutions on its network. Processing ACH transactions requires computing and other resources, which have both fixed and variable components. Therefore, it is reasonable for an operator to charge transaction fees to recover the costs associated with processing ACH transactions.

Third, the Reserve Banks provide settlement for all ACH transactions they process, including interoperator transactions. Other operators do not settle interoperator transactions that are processed by the Reserve Banks. As a result, the Reserve Banks incur accounting, computing, and other costs when they settle ACH interoperator transactions for depository institutions that use PSOs. Thus, the Reserve Banks are providing a service not provided by other operators when they settle interoperator transactions they process.

The Board has concluded that competition in the provision of ACH operator services would be enhanced through modifications to the deposit deadlines and delivery schedules for interoperator transactions and the adoption of a new pricing structure for these transactions. Specifically, the

Board believes that deposit deadlines for interoperator transactions should enable Reserve Banks and PSOs to establish competitive deposit deadlines and delivery schedules for their customers. The Board also believes that the Reserve Banks should adopt a price structure for interoperator transactions that is consistent with the cost structure associated with processing interoperator transactions. This new price structure should include a fee to access depository institutions on the Reserve Banks' ACH network, a fee to process interoperator transactions, and a settlement fee to recover the Reserve Banks' settlement costs. The Board believes that these changes, along with the ability of PSOs to assess interoperator fees to Reserve Banks, should enhance competition in the provision of ACH operator services to depository institutions.

IV. Proposed Modifications

The Board has developed a specific proposal to modify the Reserve Banks' deadlines and pricing structure for ACH interoperator transactions that it believes will promote competition in the provision of ACH services and address the concerns raised by some commenters. The Board is requesting comment on this proposal.

The Board proposes the following deadlines and pricing structure for ACH interoperator transactions that are processed by the Reserve Banks:

- Deposit deadlines: The Board proposes that the Reserve Banks work collaboratively with ACH operators to establish interoperator deposit deadlines by which the Reserve Banks and the PSOs would exchange interoperator transactions.
- Pricing structure: The Board proposes the following price structure for interoperator transactions processed by the Reserve Banks.

—First, the Reserve Banks would charge ACH operators a monthly network access fee for each routing number they access on the Reserve Banks' ACH network.

—Second, the Reserve Banks would charge ACH operators per-item fees for transactions they send through the Reserve Banks' ACH network.

—Third, the Reserve Banks would charge depository institutions that send and receive all their transactions through PSOs a monthly settlement fee rather than the current monthly account servicing fee.

—Fourth, the Reserve Banks would pay PSOs for transactions they send to depository institutions through those PSOs.

- Eligibility: The Board proposes to limit the modified deadlines and pricing structure to intermediaries that are defined as ACH operators in the NACHA rules.

A. Deposit Deadlines

The Board proposes that the Reserve Banks work collaboratively with ACH operators to establish interoperator deposit deadlines by which the Reserve Banks and the PSOs would exchange interoperator transactions. The Reserve Banks' preliminary recommendation is that one interoperator deposit deadline be established at 2:30 p.m. eastern time for immediate settlement items and that another interoperator deposit deadline for next-day settlement items be established at 3:00 a.m. eastern time.[7] The Reserve Banks would accept interoperator transactions from PSOs and send interoperator transactions to PSOs at the new deposit deadlines. Clearly, ACH operators, including the Reserve Banks, would need to establish their own deposit and delivery deadlines for their customers. Further, the PSOs could establish other deadlines by which they would exchange interoperator transactions among themselves.

If the Reserve Banks' preliminary recommendation for interoperator deposit deadlines were adopted, the Reserve Banks would require their customers to deposit next-day settlement items half an hour earlier than they do today. The Reserve Banks, however, currently receive almost all their ACH volume well before the deposit deadlines and deadline extensions have become much less frequent. The recommended deposit deadlines would require no change in deposit times for Reserve Bank customers depositing immediate settlement items. As a result, the recommended exchange deadlines would likely have minimal effects on the processing schedules of Reserve Bank customers. Further, because Reserve Banks would deposit transactions with PSOs at the interoperator deposit deadlines, PSOs should be able to offer their customers deposit and delivery deadlines that are competitive with those offered by the Reserve Banks. Thus, the Board's general proposal for interoperator deposit deadlines, as well as the specific Reserve Bank deposit deadline recommendation, would likely enhance competition with minimal effect on depository institutions.

Interoperator deposit deadlines, however, pose problems for transactions that involve three operators. Currently, a small fraction of the volume that PSOs deposit with the Reserve Banks is destined to other PSOs, which results in some transactions being processed by three operators.[8] With interoperator deposit deadlines, however, if an operator receives a transaction from another operator at the interoperator deposit deadline that is destined to a third operator, the middle operator would be unable to forward the transaction timely because the deadline to deposit transactions with the third operator would have already passed. Moreover, three-operator transactions tend to be inefficient because they result in redundant processing by multiple operators before they are delivered to the RDFI.

One way to address this issue is for NACHA to prohibit three-operator transactions. The Board suggests that NACHA evaluate whether its ACH operator definition should be revisited to require operators to exchange interoperator transactions directly with the operator serving the RDFI. In any case, to ensure that the Reserve Banks are able to forward the transactions to the RDFI's PSO by the interoperator deposit deadline, the Board proposes that the Reserve Banks require all ACH transactions that need to be forwarded to another operator, including transactions deposited by a PSO, be deposited by the Reserve Banks' regular customer deposit deadline.

B. Pricing Structure for Interoperator Transactions

The Board proposes a new three-tiered pricing structure for interoperator transactions processed by the Reserve Banks. Under the proposed structure, the Reserve Banks would charge PSOs and their customers fees (1) to access the Reserve Banks' ACH network, (2) to process interoperator transactions they receive from PSOs, and (3) to settle

[7] Immediate settlement items are items that are settled on the same banking day as they are received while next-day settlement items are items that are settled on the banking day after they are received. The Reserve Banks' banking day for the receipt of ACH items is from 3:00 a.m. eastern time to 2:59 a.m. eastern time on the next calendar day. Only returns and National Association of Check Safekeeping items are eligible for immediate settlement.

[8] The Board understands that some depository institutions that use a PSO prefer to minimize the number of settlements they receive for their ACH transactions. Most of these institutions already receive and reconcile two settlements one from their PSO, another from the Reserve Banks and do not want to receive a third settlement for ACH transactions that PSOs exchange directly using the Private ACH Exchange (PAX) system. Thus, PSOs use the Reserve Banks to send some transactions destined to other PSOs, which minimizes settlements but results in three-operator transactions.

interoperator transactions for depository institutions that send and receive all their transactions through a PSO. The Reserve Banks plan to maintain the current fee structure for their customers and do not anticipate any increases in fees resulting from this proposal.

In developing a pricing structure for interoperator transactions, the Reserve Banks used a cost-based approach to set fees. In their analysis, the Reserve Banks attempted to identify costs related to network access, processing, and settlement and to price those components separately. Further, the Reserve Banks excluded certain costs that might not be incurred when services are provided to ACH operators so that the interoperator fee structure would reflect, as closely as possible, the cost structure for interoperator transactions.

Specifically, the Board proposes the following fee structure for interoperator transactions. The price ranges outlined below are based on preliminary cost analyses by the Reserve Banks. First, the Reserve Banks would charge the PSOs a monthly network access fee of between $5 and $10 for each routing number to which they send transactions on the Reserve Banks' ACH network. Second, the Reserve Banks would charge PSOs a per-item fee of between $0.002 and $0.004 to process interoperator transactions sent to RDFIs on the Reserve Banks' ACH network. And third, rather than the current monthly account servicing fee, the Reserve Banks would charge depository institutions that send and receive all their transactions through PSOs a monthly settlement fee per routing number (projected to be about $20) to settle interoperator transactions.[9]

An important additional feature of the Board's overall proposal is that the Reserve Banks would pay PSOs for commercial and government ACH transactions they deliver to RDFIs through PSOs. These fees would compensate the PSOs for the services they provide to Reserve Banks by delivering transactions to RDFIs on their networks.

An open issue that remains unresolved is how fees that PSOs would charge Reserve Banks would be restrained. The Board examined alternative approaches to restrain fees charged by operators. First, the Board considered limiting the interoperator fees Reserve Banks would pay to PSOs to the PSOs' published fees. In practice, however, because a PSO's published customer fee structure may be different from its interoperator fee structure and because not all operators publish fees or charge all of their customers their published fees, it would be difficult to ascertain whether the interoperator fees charged by an operator are reasonable. Alternatively, the Board considered allowing the Reserve Banks to pay PSOs the same fees they charge PSOs. This mechanism, while creating parity, would require PSOs to adopt the Reserve Banks' pricing structure, which may not be reflective of the PSOs' cost structures. The Board believes that the continued growth of the ACH network would be enhanced by maintaining low, cost-based interoperator fees. Thus, the Board requests comment on how the fees that operators charge each other might be restrained to encourage the continued growth of the ACH network.

C. Eligibility

The Board proposes that the deadline and price structure modifications be limited to any intermediary that is defined as an operator under NACHA rules.[10] The role of operators in the ACH system is separate and distinct from the role of other ACH intermediaries. Generally, ACH operators play a significant role in protecting the integrity of the overall ACH network and ensuring the interoperability and efficiency of the overall network. From a service perspective, the primary distinction between ACH operators and other intermediaries is that operators provide clearing, delivery, and settlement services for intraoperator transactions and exchange interoperator transactions with other operators. Third-party processors typically do not provide settlement services for transactions they process while correspondent banks typically do not provide the comprehensive clearing and delivery services provided by operators. Thus, the Reserve Banks tend to compete with PSOs, and not third-party processors or correspondent banks, in providing services to depository institutions. Further, because NACHA's operator definition does not preclude other entities from becoming new operators, it is possible that some of the larger correspondents or third-party processors might become operators to compete with the established operators.

V. Competitive Impact

The Board must conduct a competitive impact analysis when it considers a major operational change such as that being proposed for interoperator transactions.[11] Specifically, the Board must determine whether the proposed deadlines and pricing structure have a direct and material adverse effect on the ability of other service providers to compete effectively with the Reserve Banks in providing similar services, and if so, whether the adverse effect on competition is due to differing legal powers or constraints, or due to a dominant market position deriving from such legal differences.

The purpose of the proposed modifications is to address the concerns expressed by commenters with respect to the Reserve Banks' current deposit deadlines and pricing practices. The proposed modifications will enhance the ability of PSOs to compete with the Reserve Banks in providing ACH operator services to depository institutions. Further, depository institutions and other intermediaries should also benefit as they are likely to see a more competitive market for the provision of ACH operator services, which could result in lower costs to process their ACH transactions. Thus, the Board does not anticipate any adverse effects on competition resulting from this proposal.

VI. Conclusion

The Board requests comment on the proposed modifications. Specifically, the Board is interested in commenters' views on whether the proposed modifications enhance competition in the market for ACH operator services. Further, the Board requests comment on how the fees that operators charge each

[9] The Reserve Banks would no longer provide customer service to depository institutions for transactions they send or receive through a PSO. These institutions would have to direct transaction and service-related inquiries to their PSOs. The Reserve Banks, however, would continue to provide customer service on settlement-related questions.

[10] NACHA recently adopted modifications to its definition of an ACH operator (NACHA Operating Rules, section 13.1.1). To qualify as a private-sector ACH operator, an entity must execute an agreement with NACHA to comply with or perform all of the following: adhere to NACHA operating rules and other applicable laws and regulations; execute agreements with a minimum of twenty independent depository institutions that bind the depository institutions NACHA operating rules and the private-sector ACH operator's rules; provide clearing, delivery, and settlement services for intraoperator transactions; exchange interoperator transactions with other ACH operators; process and edit files based on the requirements of NACHA operating rules; evaluate the creditworthiness of and apply risk control measures to their customers; adhere to the Federal Reserve's Policy Statement on Privately Operated Multilateral Settlement Systems; and adhere to any NACHA performance standards for ACH operators. Under this definition, Electronic Payments Network, Visa, and American Clearing House are considered to be private-sector ACH operators. The Reserve Banks reserve the right to preempt any NACHA rule in their ACH operating circular. Thus, the Reserve Banks reserve the right to establish their own operator definition should they object to any future modifications to NACHA's definition of an ACH operator.

[11] Federal Reserve Regulatory Service, 7–145.2.

other might be restrained to encourage the continued growth of the ACH network.

By order of the Board of Governors of the Federal Reserve System, May 22, 2000.

Jennifer J. Johnson,

Secretary of the Board.

[FR Doc. 00–13207 Filed 5–25–00; 8:45 am]

BILLING CODE 6210–01–P

FEDERAL RESERVE SYSTEM

Sunshine Meeting Notice

AGENCY HOLDING THE MEETING: Board of Governors of the Federal Reserve System.

TIME AND DATE: 10 a.m., Wednesday, May 31, 2000.

PLACE: Marriner S. Eccles Federal Reserve Board Building, 20th and C Streets, N.W., Washington, D.C. 20551.

STATUS: Closed.

MATTERS TO BE CONSIDERED:

1. Personnel actions (appointments, promotions, assignments, reassignments, and salary actions) involving individual Federal Reserve System employees.
2. Any matters carried forward from a previously announced meeting.

CONTACT PERSON FOR MORE INFORMATION: Lynn S. Fox, Assistant to the Board; 202–452–3204.

SUPPLEMENTARY INFORMATION: You may call 202–452–3206 beginning at approximately 5 p.m. two business days before the meeting for a recorded announcement of bank and bank holding company applications scheduled for the meeting; or you may contact the Board's Web site at http://www.federalreserve.gov for an electronic announcement that not only lists applications, but also indicates procedural and other information about the meeting.

Dated: May 24, 2000.

Robert deV. Frierson,

Associate Secretary of the Board.

[FR Doc. 00–13425 Filed 3–24–00; 12:58 pm]

BILLING CODE 6210–01–P

GENERAL ACCOUNTING OFFICE

Federal Accounting Standards Advisory Board

AGENCY: General Accounting Office.

ACTION: Notice of Issuance of Statement of Federal Financial Accounting Standards (SFFAS) No. 18).

Board Action: Pursuant to the Federal Advisory Committee Act (Pub. L. No. 92–463), as amended, and the FASAB Rules Of Procedure, as amended in October, 1999, notice is hereby given that the Federal Accounting Standards Advisory Board (FASAB) has issued Statement of Federal Financial Accounting Standards (SFFAS) No. 18, *Amendments to Accounting Standards for Direct Loans and Loan Guarantees in SFFAS No. 2.*

The Board approved the Statement in February 2000, and submitted it to FASAB principals for a 90-day review. The review period closed on May 19, 2000.

SFFAS No. 18 provides the following new requirements to improve financial reporting for subsidy costs and performance of Federal credit programs:

- Report subsidy reestimates in two distinct components: the interest rate reestimate and the technical/default reestimate. The former is a reestimate due to a change in interest rates used in calculating the subsidy expense. The latter is a reestimate due to changes made in projected cash flows after reevaluating all the risk factors as of the financial statement date.
- Display a reconciliation on an entity-wide basis between the beginning and the ending balances of the subsidy cost allowance for direct loans and the liability for loan guarantees, reported in an entity's balance sheet.
- Provide a narrative to disclose and discuss events and changes in economic conditions and legislation that have had a significant and measurable effect on the subsidy costs of direct loans and loan guarantees.

The standards prescribed in SFFAS No. 18 are effective for periods beginning after September 30, 2000. Hard copies of the statement will be mailed to the FASAB mailing list. It is also available on the FASAB web site at *www.financenet.gov/fasab.htm* or by calling 202–512–7350.

FOR FURTHER INFORMATION CONTACT: Wendy Comes, Executive Director, 441 G St., NW., Mail Stop 6K17V, Washington, DC 20548, or call (202) 512–7350.

Authority: Federal Advisory Committee Act. Pub. L. No. 92–463.

Dated: May 23, 2000.

Wendy M. Comes,

Executive Director.

[FR Doc. 00–13306 Filed 5–25–00; 8:45 am]

BILLING CODE 1610–01–M

GENERAL SERVICES ADMINISTRATION

Privacy Act of 1974; System of Records

AGENCY: General Services Administration.

ACTION: Notice of a revised system of records subject to the Privacy Act of 1974.

SUMMARY: The General Services Administration (GSA) is providing notice of a revision to the system of records, Disbursement and Accounts Payable Files (GSA/PPFM–1). The revision expands the categories of individuals covered by the system to include contractual and appointed experts and consultants. It also includes the purpose for the system and updates information on the system manager, the authority for the system, and changes due to automation.

DATES: Comments on the proposed revisions must be provided by June 26, 2000. The proposed revision will become effective without further notice on June 26, 2000 unless comments require otherwise.

ADDRESSES: Comments should be addressed to: GSA Privacy Act Officer, General Services Administration, CAI, 1800 F Street, NW, Washington, DC 20405.

FOR FURTHER INFORMATION CONTACT: Jinaita Kanarchuk by phone, 202–501–1452, or e-mail jinaita.kanarchuk@gsa.gov.

GSA/PPFM–1

SYSTEM NAME:

Disbursement and Accounts Payable Files.

SYSTEM LOCATION:

System records are located in GSA's finance centers as follows:

Heartland Finance Center, 1500 East Bannister Road, Kansas City, MO 64131.

Greater Southwest Finance Center, 819 Taylor Street, Fort Worth, TX 76102.

CATEGORIES OF INDIVIDUALS COVERED BY THE SYSTEM:

Current and former employees; and contractual or appointed experts and consultants.

CATEGORIES OF RECORDS IN THE SYSTEM:

The system provides for reporting each account's status. Records may include but are not limited to name, address, telephone number, vendor identification number, and Social Security number.

AUTHORITY FOR MAINTENANCE OF THE SYSTEM:

31 U.S.C. 3501 *et seq.*; 40 U.S.C. 758; 5 U.S.C. 3109.

PURPOSE(S):

To assemble in one system disbursement and accounts payable records to GSA employees, and on experts and consultants procured contract or by appointment.

ROUTINE USES OF RECORDS MAINTAINED IN THE SYSTEM, INCLUDING CATEGORIES OF USERS AND THE PURPOSES OF SUCH USES:

To the extent necessary, the records are available outside GSA to monitor and document adverse action proceedings and to advise on credit inquiries.

The following routine uses also apply:

a. A record may be disclosed where pertinent in any legal proceeding to which GSA is a party before a court or administrative body.

b. A record may be disclosed to a Federal, State, local, or foreign agency responsible for investigating, prosecuting, enforcing, or carrying out a statute, rule, regulation, or order when GSA becomes aware of a violation or potential violation of civil or criminal law or regulation.

c. A record may be disclosed as needed to duly authorized officials engaged in investigating or settling a grievance, complaint, or appeal filed by an employee or other individual who is the subject of the record.

d. Records may be provided to the Office of Personnel Management (OPM) in accordance with the agency's responsibility for evaluating Federal personnel management.

e. A record may be disclosed to a Member of Congress or his or her staff on behalf of and at the request of the individual who is the subject of the record.

POLICIES AND PRACTICES FOR STORING, RETRIEVING, ACCESSING, RETAINING, AND DISPOSING OF RECORDS IN THE SYSTEM

STORAGE:

Paper records are maintained in file folders and card files stored in filing cabinets, or in electronic form in computers.

RETRIEVABILITY:

Records are retrieved by name or by identifying number.

SAFEGUARDS:

Records are stored in guarded buildings and/or in areas controlled by authorized personnel. Computer files are protected by the use of passwords.

RETENTION AND DISPOSAL:

Disposition of records is in accordance with the Handbook, GSA Records Maintenance and Disposition System (OAD P 1820.2).

SYSTEM MANAGER(S) AND ADDRESS:

Director, Financial and Accounting Systems Division (BCA), Office of Finance, Office of the Chief Financial Officer, General Services Administration, 1800 F Street, NW, Washington, DC 20405.

NOTIFICATION PROCEDURE:

Individuals may obtain information about whether they are part of this system of records from the system manager at the above address.

RECORD ACCESS PROCEDURES:

Requests to access records should be directed to the system manager at the above address. Inquiries should provide, as appropriate, full name, Social Security number, vendor number, address, telephone number, and the dates and transactions giving rise to the record. For identification requirements, refer to the agency regulations in 41 CFR part 105–64.

CONTESTING RECORD PROCEDURES:

GSA rules for access to records, and for contesting the contents and appealing initial determinations, are provided in 41 CFR part 105–64.

RECORD SOURCE CATEGORIES:

The individuals themselves, employees, other agencies, management officials, and non-Federal sources such as private firms.

Dated: May 22, 2000.

Daniel K. Cooper,

Director, Administrative Services Division.

[FR Doc. 00–13266 Filed 5–25–00; 8:45 am]

BILLING CODE 6820–34–M

DEPARTMENT OF HEALTH AND HUMAN SERVICES

Centers for Disease Control and Prevention

[30DAY–34–00]

Agency Forms Undergoing Paperwork Reduction Act Review

The Centers for Disease Control and Prevention (CDC) publishes a list of information collection requests under review by the Office of Management and Budget (OMB) in compliance with the Paperwork Reduction Act (44 U.S.C. Chapter 35). To request a copy of these requests, call the CDC Reports Clearance Officer at (404) 639–7090. Send written comments to CDC, Desk Officer; Human Resources and Housing Branch, New Executive Office Building, Room 10235; Washington, DC 20503. Written comments should be received within 30 days of this notice.

Proposed Projects

1. Public Health Infrastructure Surveillance and Performance Monitoring Network—New—The Centers for Disease Control and Prevention (CDC) proposes to establish a sentinel network of 320 local health departments to provide ongoing public health system infrastructure and capacity data. As the nation's prevention agency, CDC is working to support the U.S. public health mission of rapidly detecting disease and health risks, rapidly communicating and strengthening the capacity to respond. Towards this goal, CDC proposes to assess and strengthen the nation's public health infrastructure by developing a network of local health departments that will provide ongoing information to public health leaders, policy makers, program managers and others to identify needs, target resources, and assist in overall preparedness. Data gathered by survey from the sentinel network will also lead to improvement of the public health communications systems and reinforced training and credentialing for core workforce skills, and will help in developing standards for improved organizational performance.

The purpose of this Sentinel System is to: (1) Provide data to assist with monitoring and measuring local public health systems; (2) assess the public health infrastructure including data and information systems, public health workforce, and effective public health organizations that enable the performance of the essential public health services in every community; and (3) evaluate the use of these data in developing strategies to strengthen the infrastructure of public health. This data will allow CDC and the public health community to improve infrastructure quality and capacity. Examples of cross-cutting infrastructure issues that may be identified by this data include the extent of under-funding of public health, the need for effective local leadership and for integrated electronic information systems, and the emerging role of measurable standards for local health departments.

The main respondents to the survey will be local health officers. The annual burden hours are estimated to be 1,920.

Respondents	Number of respondents	Number of responses/ respondent	Avg. burden/response (in hrs.)	Total burden (in hrs.)
Local public health systems	320	1	6	1,920
Total				1,920

Dated: May 19, 2000.

Charles W. Gollmar,

Acting Associate Director for Policy, Planning and Evaluation, Centers for Disease Control and Prevention (CDC).

[FR Doc. 00–13244 Filed 5–25–00; 8:45 am]

BILLING CODE 4163–18–P

DEPARTMENT OF HEALTH AND HUMAN SERVICES

Centers for Disease Control and Prevention

[30DAY–36–00]

Agency Forms Undergoing Paperwork Reduction Act Review

The Centers for Disease Control and Prevention (CDC) publishes a list of information collection requests under review by the Office of Management and Budget (OMB) in compliance with the Paperwork Reduction Act (44 U.S.C. Chapter 35). To request a copy of these requests, call the CDC Reports Clearance Officer at (404) 639–7090. Send written comments to CDC, Desk Officer; Human Resources and Housing Branch, New Executive Office Building, Room 10235; Washington, DC 20503. Written comments should be received within 30 days of this notice.

Proposed Projects

1. Congenital Syphilis (CS) Case Investigation and Report Form (0920–0128)—Extension—The Centers for Disease Control and Prevention (CDC) proposes to continue data collection for congenital syphilis case investigations under the Congenital Syphilis Case Investigation and Report Form (CDC 73.126 REV 11–98), currently approved under OMB No. 0920–0128. This request is for a 3-year extension of clearance. Reducing congenital syphilis is a national objective in the DHHS Report entitled Healthy People 2000: Mid-course Review and 1995 Revisions. Objective 19.4 of this document states the goal: ''reduce congenital syphilis to an incidence of no more than 40 cases per 100,000 live births'' by the year 2000. In order to meet this national objective, an effective surveillance system for congenital syphilis must be continued in order to monitor current levels of disease and progress towards the year 2000 objective. This data will also be used to develop intervention strategies and to evaluate ongoing control efforts.

Respondent burden is approximately 15 minutes per reported case. The estimated annual number of cases expected to be reported using the current case definition is 1,000 or less. Therefore, the total number of hours for congenital syphilis reporting required will be approximately 260 hours per year. The annualized cost to the respondents is $9,100 based on the average hourly wage of $35.00 per hour for respondents (clerical and nursing staff from 65 project areas).

Respondents	No. of respondents	No. of responses/ respondent	Avg. burden/response (in hrs.)	Total burden (in hrs.)
State and local health departments	65	16	15/60	260
Total				260

Dated: May 19, 2000.

Charles W. Gollmar,

Acting Associate Director for Policy, Planning and Evaluation, Centers for Disease Control and Prevention (CDC).

[FR Doc. 00–13245 Filed 5–25–00; 8:45 am]

BILLING CODE 4163–18–P

DEPARTMENT OF HEALTH AND HUMAN SERVICES

Centers for Disease Control and Prevention

[Program Announcement 00091]

State Cardiovascular Health Programs; Notice of Availability of Funds

A. Purpose

The Centers for Disease Control and Prevention (CDC) announces the availability of fiscal year (FY) 2000 funds for a cooperative agreement program for State Cardiovascular Health Programs. CDC is committed to achieving the health promotion and disease prevention objectives of ''Healthy People 2010,'' a national activity to reduce the morbidity and improve the quality of life. This program addresses the ''Healthy People 2010'' focus area of Heart Disease and Stroke. For the conference copy of ''Healthy People 2010'', visit the internet site: <http://www.health.gov/healthypeople>.

The purpose of the program is assist States in developing, implementing, and evaluating cardiovascular health promotion, disease prevention, and control programs. Also, to assist States in developing their Core Capacity Programs into Comprehensive Programs. Core Capacity Programs are the foundation upon which comprehensive cardiovascular health programs can be built.

Special Guidelines for Technical Assistance

Conference Call

Technical assistance will be available for potential applicants on a conference call to be held from 2:00 EDT to 4:00 EDT on June 6, 2000. Potential applicant are requested to call in using only one telephone line. The conference can be accessed by calling 1–800–311–3437 [Federal call (404) 639–3277] and entering access code 371045. The purpose of the conference call is to help potential applicants to:

1. Understand the scope and intent of the Program Announcement for the State Cardiovascular Health Programs;

2. Be familiar with the Public Health Services funding policies and application and review procedures. Participation in this conference call is not mandatory. At the time of the call if you have problems accessing the call, contact 770–488–2525.

B. Eligible Applicants

Assistance will be provided only to the health departments of States or their bona fide agents, except for the 11 States currently receiving funds under Program Announcement 98084, including the District of Columbia, the Commonwealth of Puerto Rico, the Virgin Islands, the Commonwealth of the Northern Mariana Islands, American Samoa, Guam, the Federated States of Micronesia, the Republic of the Marshall Islands, and the Republic of Palau.

State health departments are uniquely qualified to define the cardiovascular disease problem throughout the State, to plan and develop statewide strategies to reduce the burden of cardiovascular diseases, to provide overall State coordination of cardiovascular health promotion, disease prevention, and control activities among partners, to lead and direct communities, to direct and oversee interventions within overarching State policies, and to monitor critical aspects of cardiovascular diseases.

Eligible applicants may apply for either the Core Capacity Program or the Comprehensive Program. However, applicants choosing to apply for the Comprehensive Program must meet the matching requirement for State funds (see Recipient Financial Participation).

To improve the cardiovascular health of all Americans, every State health department should have the capacity, commitment, and resources to carry out a comprehensive cardiovascular health promotion, disease prevention and control program. Applicants may apply for one, but not both, of the following levels of support:

1. A Core Capacity Program to develop basic cardiovascular health promotion, disease prevention, and control functions and activities at the State level such as partnerships and program coordination related to primary and secondary prevention; scientific capacity; inventory of policy and environmental strategies; a State plan for cardiovascular health promotion, disease prevention, and control; training and technical assistance; culturally-competent strategies for addressing priority populations (See Attachment I); and population-based intervention strategies.

2. A Comprehensive Program to continue and enhance core capacity functions, as needed, as well as implement, disseminate, and evaluate intervention activities throughout the State using State-level organizations, health care settings, work sites, schools, media, the government, and community-based organizations as primary modes of intervention for cardiovascular health promotion, disease prevention, and control; monitor secondary prevention strategies; and complement professional education activities. In addition to the components of the Core Capacity Programs, the Comprehensive Programs extend resources to local health agencies, communities, and organizations for implementation of cardiovascular health strategies.

C. Availability of Funds

Approximately $4,950,000 is available in FY 2000 to fund approximately seven awards.

1. Approximately $1,200,000 is available for approximately 3 to 5 Core Capacity Program awards. It is expected that the average award will be $300,000, ranging from $250,000 to $450,000.

2. Approximately $3,750,000 is available for approximately 2 to 4 Comprehensive Program awards. It is expected that the average award will be $1,250,000, ranging from $1,000,000 to $1,400,000.

It is expected that the awards will begin on or about September 30, 2000 and will be made for a 12-month budget period within a project period of up to three years. Funding estimates may change.

Continuation awards within an approved project period will be made on the basis of satisfactory progress as evidenced by required reports and the availability of funds.

States that apply for Comprehensive Program funding should submit in their applications evidence that they have significant core capacity as specified in the Core Capacity Program Recipient Activities 1 through 5.

Direct Assistance

You may request Federal personnel as direct assistance in lieu of a portion of financial assistance.

Use of Funds

Funds provided under this program announcement are not intended to be used to conduct community-based pilot or demonstration research projects. Cooperative agreement funds may be used to support personnel and to purchase equipment, supplies, and services directly related to program activities and consistent with the scope of the cooperative agreement. Cooperative agreement funds may not be used to supplant State or local funds, to provide inpatient care or personal health services, or support construction or renovation of facilities. Secondary prevention activities cannot provide for drugs, patient rehabilitation, or other costs associated with the treatment of cardiovascular diseases.

Recipient Financial Participation

Under the Comprehensive Program of this announcement, matching funds are required from State sources in an amount not less than $1 for each $4 of Federal funds awarded. Applicants for the Comprehensive Program must provide evidence of State-appropriated resources targeting cardiovascular health promotion, disease prevention, and control of at least twenty percent of the total approved budget. The Preventive Health and Health Services (PHHS) Block Grant may not be included as State resources.

Applicants may not use these funds to supplant funds from State sources or the Preventive Health and Health Services Block Grant dedicated to cardiovascular disease. Applicants must maintain current levels of support dedicated to cardiovascular disease from State sources or the Preventive Health and Health Services Block Grant.

Funding Preferences

A preference will be given to those States in which mortality rates from ischemic heart disease or stroke exceed the national rates by ten percent or more. The States eligible for a preference (based on National Vital Records) that are not presently funded include: Arkansas, Indiana, Ohio, Oklahoma, Tennessee, and the District of Columbia.

Other States or territories may request preference status; but, they must provide evidence that their mortality rate from ischemic heart disease exceeds 189.7/100,000 or the mortality rate from stroke exceeds 44.4/100,000. Mortality statistics provided by the applicant must use ICD–9 codes of 410–414 (Ischemic heart disease) and 430–438 (Stroke), age-adjusted to the 1970 U.S. population, resident population only, for the 35–74 year-old population of the State, for 1991–1995 based on National Vital Records available on CDC WONDER.

D. Program Requirements

In conducting activities to achieve the purpose of this program, the recipient

will be responsible for conducting the activities under 1.a. (Recipient Activities for Core Capacity Programs) or under 1.b. (Recipient Activities for Comprehensive Programs), and CDC will be responsible for the activities listed under 2. (CDC Activities).

1.a. Recipient Activities for Core Capacity Programs

(1) Develop and Coordinate Partnerships. Identify, consult with, and appropriately involve State cardiovascular health partners to identify areas critical to the development of a statewide cardiovascular health promotion, disease prevention, and control program, coordinate activities, avoid duplication of effort, and enhance the overall leadership of the State with its partners. Within the State health department, coordinate and collaborate with partners in nutrition, physical activity, tobacco, secondary prevention, diabetes, health education, Preventive Health and Health Services Block Grant, office of minority health, laboratory, as well as with data partners such as vital statistics and the State's Behavioral Risk Factor Surveillance System. Efforts to address tobacco use should be coordinated with the State tobacco program; tobacco-related activities should not be duplicated. Within State government, collaborate and partner with other departments such as education, transportation, parks and recreation and with State agency data partners, such as the youth risk behavioral surveillance system. Within the State, collaborate with other organizations such as the American Heart Association and other peer review organizations. Partnerships and collaborative efforts may develop into memorandums of agreement (MOA) or similar formalized arrangements. The State health department should organize a statewide work group or coalition with representation from other agencies, professional and voluntary groups, academia, community organizations, the media, and the public to develop a state plan.

(2) Develop Scientific Capacity to Define the Cardiovascular Disease Problem. Enhance epidemiology, statistics, surveillance, and data analysis from existing data systems such as vital statistics, hospital discharges, and Behavioral Risk Factor Surveillance System (BRFSS). This should include the collecting of cardiovascular-related data using the BRFSS protocols and time line. It is suggested that funded States collect data on the BRFSS sections or modules on Hypertension Awareness, Cholesterol Awareness, and Cardiovascular Disease in odd years (*i.e.,* 2001, 2003).

It is suggested that funded States collect data using the Module on Heart Attack and Stroke Signs and Symptoms at least every four years (*i.e.,* 2001, 2005) or, if possible, every two years (*i.e.,* 2001, 2003, 2005). The enhanced scientific capacity should include efforts to determine: (a) Trends in cardiovascular diseases, including age of onset of disease and age at death. (b) Geographic distribution of cardiovascular diseases.

(c) The racial and ethnic disparities in cardiovascular diseases.

(d) Ways to integrate systems to provide comprehensive data needed for assessing and monitoring the cardiovascular health of populations and program outcomes.

Monitoring and program evaluation are considered essential components of building scientific capacity. Scientific capacity may also extend to developing access to outside databases such as medical care, and to laboratory development consistent with the overall direction of the program. State public health laboratories, or laboratories contracted by States to perform lipid and lipoprotein testing, should be standardized by the CDC Lipid Standardization Program.

(3) Develop an Inventory of Policy and Environmental Strategies. Develop an inventory of policy and environmental issues in systems and settings (*e.g.,* State-level, communities, health care sites, work sites, schools) affecting the cardiovascular health of the general population and priority populations. The inventory should focus on physical activity, nutrition, tobacco, elevated blood pressure, and elevated cholesterol. It should initially focus on state-level systems, and by funding future years it should include the remaining four settings (*i.e.,* communities, health care sites, work sites, schools). Items inventoried could include issues related to food service policies; availability of environmental strategies for being active such as sidewalks, recreation centers, parks, walking trails; and restrictions on tobacco. Health care-related policy and environmental issues should relate to the standards of care for primary and secondary prevention and should be assessed in collaboration with purchasers of medical care, managed care organizations, and consumers. Attention should be paid to the needs of priority populations and the policy and environmental issues most vital to their cardiovascular health.

(4) Develop or Update a State Plan. Develop or update a comprehensive State Plan for cardiovascular health promotion, disease prevention, and control to include specific objectives for future reductions in cardiovascular diseases and related risk factors. Develop a thorough description of the cardiovascular disease burden geographically and demographically, set objectives, and include population-specific strategies for achieving the objectives. The strategies should emphasize population-based policy and environmental approaches and education and awareness that increase support for policy and environmental approaches. It should also address the needs of priority populations. The strategies may also include planning for program development at the community level, particularly for priority populations. Partners should be involved in the development and implementation of the cardiovascular health State Plan.

(5) Provide Training and Technical Assistance. Increase the skill-level of State health department staff and partners in areas such as approaches to population-based interventions utilizing policy and environmental strategies; cardiovascular diseases and related risk factors including nutrition, physical activity, tobacco, elevated blood pressure, and elevated cholesterol; secondary prevention; social marketing and communications; epidemiology; cultural competency; use of data in program planning; and program planning and evaluation. Training may address State and local health department staff and partners, and may include provision of technical assistance to communities, work sites, health sites, schools, and faith-based organizations.

(6) Develop Population-Based Strategies. Develop population-based intervention strategies to promote cardiovascular health, promote primary and secondary prevention of cardiovascular diseases and related risk factors (*e.g.,* nutrition, physical activity, tobacco, elevated blood pressure, and elevated cholesterol); increase awareness of first signs and symptoms of heart attack and stroke, educate about the need for policy and environmental approaches, and reduce the burden of cardiovascular diseases in the State. The strategies may use State-level organizations, health sites, work sites, schools, media, faith-based organizations, community-based organizations, and governments as effective means to reach people.

(7) Develop Culturally-Competent Strategies for Priority Populations. Develop strategies for enhanced program efforts to address priority

populations. Specify how interventions would be designed appropriately for the priority populations to be addressed. Strategies should focus on policy and environmental approaches specific for the population to be addressed but may, on a limited basis, include interventions such as community events, screenings, and campaigns designed to increase awareness of the cardiovascular disease burden and risk factors in the priority populations and to promote policy and environmental strategies to improve cardiovascular health and reduce risk factors. Initiatives may be used to demonstrate the effectiveness of selected strategies or as a means to generate community support for policy and environmental strategies.

1.b. Recipient Activities for Comprehensive Programs

(1) Implement Population-Based Intervention Strategies Consistent with the State Plan. Strategies should include policy and environmental approaches, education and awareness supportive of the need for policy and environmental approaches, and other population-based approaches. These may be disseminated through various settings and groups including State-level organizations, health care settings, work sites, schools, community-based organizations, governments, and the media. Interventions should be population-based, with objectives established that specify the population-wide changes sought. Approaches should extend to a relatively large proportion of the population to be addressed, rather than a few selected communities. Interventions should be coordinated such that health messages, policies, and environmental measures are consistent, the most cost-effective methods are used for reaching the populations, and duplication of effort is avoided. Interventions should address physical activity, nutrition, tobacco, elevated blood pressure, elevated cholesterol and secondary prevention. Efforts to address tobacco use should be coordinated with the State tobacco program; tobacco-related activities should not be duplicated. Implementation may extend to grants and contracts with local health agencies, communities, and nonprofit organizations.

(2) Implement Strategies Addressing Priority Populations. These strategies may include interventions directed to specific communities and segments of the population, and may include all appropriate modes of intervention needed to reach the populations to be addressed. These strategies may include more intensive, directed interventions by organizations concerned with improving the health and quality of life of priority populations, including community-based organizations, State-level organizations, faith-based organizations, work sites, health care sites, and schools.

(3) Specify and Evaluate Intervention Components. Design and implement a program evaluation system. The evaluation plan should address measures considered critical to determine the success of the program. Evaluation should be limited in scope to address strategy implementation, changes in policies and the physical and social environments affecting cardiovascular health and, to a lesser degree, changes in behavioral risk factors. Evaluation should not include comparison communities or quasi-experimental designs. Evaluation should cover both population-based strategies as well as targeted strategies. Evaluation should rely primarily upon existing data systems such as vital statistics and hospital discharges.

(4) Implement Professional Education Activities. Provide or collaborate with partners to provide professional education to health providers and others to assure appropriate primary and secondary prevention practices are offered routinely and to assure that appropriate standards of care are provided to all.

(5) Monitor Secondary Prevention Strategies. Secondary prevention strategies may include such issues as aspirin and drug therapy, physical activity regimens, hormone replacement therapy, dietary changes, and hypertension and lipid management. Activities in secondary prevention should include monitoring the delivery of secondary prevention practices and collaborating with partners on professional education and policy change related to the implementation of the American Heart Association guidelines on primary and secondary prevention. Development of monitoring systems for secondary prevention practices may be coordinated with managed care providers, Medicaid, major employers, insurers, other organized health care providers, and purchasers of health care. Secondary prevention strategies may be integrated with professional education initiatives. Secondary prevention should not provide for drugs, patient rehabilitation, or other costs associated with the treatment of cardiovascular diseases.

2. CDC Activities

a. Provide technical assistance in the coordination of surveillance and other data systems to measure and characterize the burden of cardiovascular diseases. Provide technical assistance in the design of surveillance instruments and sampling strategies, and provide assistance in the processing of data for States. Provide data on populations at highest risk. Provide data for national-level comparisons.

b. Collaborate with the States and other appropriate partners to develop and disseminate programmatic guidance and other resources for specific interventions, media campaigns, and coordination of activities.

c. Collaborate with the States and other appropriate partners to develop and disseminate recommendations for policy and environmental interventions including the measurement of progress in the implementation of such interventions.

d. Collaborate with appropriate public, private, and nonprofit organizations to coordinate a cohesive national program.

e. Provide technical assistance to the State public health laboratory or contract laboratory to standardize cholesterol, high density lipoproteins, and triglyceride measurements.

f. Provide training and technical assistance regarding the coordination of interventions, policy and environmental strategies, and population-based strategies.

g. If requested, provide Federal personnel in lieu of a portion of the financial assistance.

E. Application Content

Use the information in the Program Requirements, Other Requirements, and Evaluation Criteria sections to develop the application content. Your application will be evaluated on the criteria listed, so it is important to follow them in laying out your program plan. Applications for the Core Capacity Program should not exceed 60 double-spaced pages, printed on one-side, in 12 point font, excluding budget, justification, and appendixes. Applications for the Comprehensive Program should not exceed 130 double-spaced pages, printed on one-side, in 12 point font, excluding budget, justification, and appendixes. Applicants should also submit appendixes including resumes, job descriptions, organizational chart, facilities, and any other supporting documentation as appropriate. All materials must be suitable for photocopying (*i.e.,* no audiovisual materials, posters, tapes, etc.)

Applicants may apply for funding of either Core Capacity activities or Comprehensive activities, but not both, and must designate in the Executive

Summary of their application the component (Core Capacity Program or Comprehensive Program) for which they are applying. Provide the following information:

1. Executive Summary

All applicants must provide a summary of the program described in the proposal (two pages maximum).

2. Core Capacity Program

a. Staffing (not included in 60-page limitation)

Describe program staffing and qualifications including contacts for physical activity, nutrition, tobacco, secondary prevention, epidemiology, and evaluation. Provide organizational chart, resumes, job descriptions, and experience for all budgeted positions. Describe lines of communication between various related chronic disease programs.

b. Facilities (not included in 60-page limitation)

Describe facilities and resources available to the program, including equipment available, communications systems, computer capabilities and access, and laboratory facilities if appropriate.

c. Background and Need

Thoroughly describe the need for funding and the current resources available for Core Capacity activities, to include:

(1) The overall State cardiovascular disease problem.

(2) The geographic patterns, trends, age, gender, racial and ethnic patterns, and other measures or assessments.

(3) The barriers the State currently faces in developing and implementing a statewide program for the prevention of cardiovascular diseases.

(4) The advisory groups, partnerships, or coalitions currently involved with the State health department for cardiovascular disease prevention and control.

(5) The current chronic disease programs within the State health department.

(6) The gaps in resources, staffing, capabilities, and programs that, if addressed, might further the progress of cardiovascular disease prevention; and how the funds will be used to fill the gaps in the core capabilities of the State cardiovascular disease prevention and control efforts.

d. Core Capacity Work Plan

Provide a work plan that addresses each of the required Core Capacity elements cited in the Recipient Activities section above, to include the following information:

(1) Program objectives for each of the elements. Objectives should describe what is to happen, by when, and to what degree.

(2) The proposed methods for achieving each of the objectives.

(3) The proposed plan for evaluating progress toward attainment of the objectives.

(4) A milestone, time line, and completion chart for all objectives for the project period.

e. Core Capacity Program Budget

Provide a detailed line-item budget with justifications consistent with the purpose and proposed objectives, using the format on CDC Form 0.1246. Applicants are encouraged to include budget items for travel for three trips to Atlanta, Georgia for three individuals to attend three-day training and technical assistance workshops.

Supporting material such as organizational charts, tables, position descriptions, relevant publications, letters of support, memorandums of agreement, etc., should be included in the appendixes and be reproducible.

3. Comprehensive Program (Narrative portions of the Comprehensive Program application may not exceed 130 double-spaced pages using 12 point font)

a. Background and Need

(1) Provide evidence that the State health department has significant core capacity as specified in the Core Capacity Program Recipient Activities 1 through 5.

(2) Provide a thorough description of the overall burden of Cardiovascular disease and related risk factors in the State and the need for support in the State; the geographic and demographic distribution, age, sex, racial and ethnic groups, educational, and economic patterns of the diseases as well as the trends over time. Describe the barriers to successful implementation of a statewide program for prevention of cardiovascular diseases within the State; partnerships and collaboration with related agencies, and the status of policies and environmental approaches in place that influence risk factors and public awareness. Describe how the funding will be used to fill the gaps in cardiovascular disease prevention activities. Provide a description of the populations to be addressed, including priority populations, and their constituencies and leadership potential to develop and conduct program activities.

b. Staffing (not included in 130-page limitation)

Describe project staffing and qualifications including contacts for physical activity, nutrition, tobacco, secondary prevention, evaluation, and epidemiology. Provide organizational chart, curriculum vitae, job descriptions, and experience needed for all budgeted positions. Describe lines of communication between various related chronic disease programs.

c. State Plan

Provide the current State plan (dated January 1997 or later) that includes population-based policy and environmental strategies as well as strategies for implementing programs which utilize health care settings, worksites, the media, schools, community-based organizations, the community at-large; and which includes strategies addressing specific priority populations and communities.

d. Evaluation

Provide description of surveillance and monitoring activities that include mortality, changes in environmental and policy indicators, and behavioral risk factors including statistically valid estimates for populations to be addressed. Describe the capability for special one-time surveys to be conducted by the state. Describe how each of the program elements will be evaluated and which measures are considered critical to monitor for evaluating the success of the program. Describe the various existing data systems to be employed, how the systems might be adapted, and the specific program elements to be evaluated by those systems. Describe the schedules for data collection and when analyses of the data will become available.

e. Comprehensive Program Work Plan

Address each of the required Comprehensive Program recipient activities cited in the Recipient Activities section above in sufficient detail to describe the results expected and how the State will achieve the results. Objectives and strategies should specify priority populations to be addressed, communities, or geographic areas of concern; complete listings of the policy and environmental changes sought to create heart-healthy environments for the population; other intervention strategies; coordination among State partners; and strategies for closing the gap in cardiovascular disease disparity. Interventions should be expressed in terms of changes sought for the general population as well as

changes in Priority populations to be addressed. Population-based approaches should extend to a relatively large proportion of the State population rather than a few selected communities. Targeted strategies should clearly define the priority populations to be addressed. Objectives should describe what is to happen, by when, and to what degree. A milestone and activities completion chart or time line should be provided for all objectives for the project period.

f. Collaboration

Provide letters of support describing the nature and extent of involvement by outside partners and coordination among State health department programs, other State agencies, and nongovernmental health and nonhealth organizations. Describe how the overall delivery of interventions for priority populations will be enhanced by these collaborative activities. Describe current data systems and how coordination will be ensured with managed care providers, Medicaid, major employers, insurers, and other organized health care providers, as well as purchasers of health care.

g. Training Capability

Provide a description of training sessions for health professionals provided within the past three years. Include agendas, dates, professional status or occupation, and number of attendees. Provide other evidence of training capabilities deemed appropriate to the program.

h. Comprehensive Program Budget Justification

Provide a line-item budget consistent with CDC Form.1246(E) along with appropriate justifications. Applicants are encouraged to include budget items for travel for three trips to Atlanta, Georgia for three individuals to attend three-day training and technical assistance workshops. State matching funds should be listed on question 15 (estimated funding) of the application face page and Section C of the Budget Information worksheet.

F. Submission and Deadline

Submit the original and two copies of new CDC Form 0.1246(E). Forms are available in the application kit. Submit the application, on or before July 14, 2000, to the Grants Management Specialist identified in Section J., ''Where to Obtain Additional Information''.

Deadline: Applications shall be considered as meeting the deadline if they are either:

(a) Received on or before the deadline date; or

(b) Sent on or before the deadline date.

(Applicants must request a legibly dated U.S. Postal Service postmark or obtain a legibly dated receipt from a commercial carrier or U.S. Postal Service. Private metered postmarks shall not be acceptable as proof of timely mailing.)

Late Applications: Applications which do not meet the criteria in (a) or (b) above are considered late applications, will not be considered, and will be returned to the applicant.

G. Evaluation Criteria

Each application will be evaluated individually against the following criteria by an independent review group appointed by CDC.

1. Core Capacity Program (Total 100 Points)

a. Staffing (10 Points)

The degree to which the proposed staff have the relevant background, qualifications, and experience; and the degree to which the organizational structure supports staffs' ability to conduct proposed activities. The degree of coordination between relevant programs within the State health department.

b. Facilities (5 Points)

The adequacy of the applicant's facilities and resources.

c. Background and Need (15 Points)

The extent to which the applicant identifies specific needs and resources available for Core Capacity activities. The extent to which the funds will successfully fill the gaps in State capabilities. The extent to which the applicant demonstrates a review of journals and other publications particularly for policy and environmental strategies.

d. Core Capacity Work Plan (60 Points)

(1) (20 Points) The extent to which the plan for achieving the proposed activities appears realistic and feasible and relates to the stated program requirements and purposes of this cooperative agreement.

(2) (20 Points) The extent to which the proposed methods for achieving the activities appear realistic and feasible and relate to the stated program requirements and purposes of the cooperative agreement.

(3) (10 Points) The extent to which the proposed plan for evaluating progress toward meeting objectives and assessing impact appears reasonable and feasible.

(4) (10 Points) The degree to which partnerships are demonstrated through collaborative activities or letters of support.

e. Objectives (10 Points)

The degree to which objectives are specific, time-phased, measurable, realistic, and related to identified needs, program requirements, and purpose of the program.

f. Budget (Not Scored)

The extent to which the budget appears reasonable and consistent with the proposed activities and intent of the program.

Content of Noncompeting Continuation Applications submitted within the project period need only include:

1. A brief progress report that describes the accomplishments of the previous budget period.

2. Any new or significantly revised items or information (objectives, scope of activities, operational methods, evaluation, key personnel, work plans, etc.) not included in year 01 or subsequent continuation applications.

3. An annual budget and justification. Existing budget items that are unchanged from the previous budget period do not need re-justification. Simply list the items in the budget and indicate that they are continuation items.

However, States receiving Core Capacity Program funding may submit a competitive application for Comprehensive Program funding at the end of any budget period within the five-year project period, provided new funds are available to fund additional Comprehensive Programs. These applications must successfully address the application Evaluation Criteria for the Comprehensive Program; and, if successful, they will move from Core Capacity funding to Comprehensive funding. If unsuccessful, they will continue with Core Capacity funding.

2. Comprehensive Program (Total 100 Points):

a. Background and Need (30 Points)

(1) (20 Points) The extent to which the applicant provides evidence that it has significant core capacity as specified in the Core Capacity Program Recipient Activities No.1 through No.5 (see Program Requirements section).

(2) (10 Points) The extent to which the funds will fill the gaps in the State's cardiovascular disease prevention activities. The extent to which the applicant identifies specific needs in relation to geographic and demographic

distribution of cardiovascular diseases with particular emphasis on priority populations; identifies trends in mortality and risk factors; identifies barriers to successful program implementation; and describes existing policy and environmental influences in terms of their affect on public awareness and the risk factors for cardiovascular diseases.

b. Staffing (10 Points)

The degree to which the proposed staff have the relevant background, qualifications, and experience; the degree to which the organizational structure supports staffs' ability to conduct proposed activities; the degree of staff coordination between relevant program within the State health department.

c. Comprehensive Work Plan (45 Points)

(1)(20 Points) The extent to which the work plan for achieving the proposed activities appears realistic and feasible and relates to the stated program requirements and purposes of this cooperative agreement. The extent to which the plan addresses the needs of the State, the feasibility of the plan and the appropriateness of the planned interventions to the cardiovascular disease problem, and the adequacy of the plan to identify and address the needs of priority populations.

(2) (20 Points) The extent to which the work plan addresses the problem through policy and environmental strategies and other appropriate population-based approaches and the extent of program activities that appropriately use settings (*e.g.,* worksites, the media, schools, community-based organizations, faith-based organizations, the community at large).

(3) (5 Points) The extent to which collaboration of State nutrition, physical activity, tobacco, health promotion, and other chronic disease programs with external partners is used to deliver the program; the extent to which coordination with other State chronic disease programs and other State agencies enhances the cardiovascular disease program; and the extent of involvement of community-based organizations in the implementation of the program.

d. Objectives (5 Points)

The degree to which the objectives are specific, time-phased, measurable, realistic, and relate to identified needs and purposes of the program, for both the general population as well as the targeted populations.

e. Evaluation (10 Points)

The extent to which the evaluation plan appears capable of monitoring progress toward meeting specific project objectives, assessing the impact of the program on the general population, assessing changes in the Priority populations, monitoring utilization of secondary prevention strategies, and assessing the implementation of policy and environmental strategies.

f. Budget (Not Scored)

The extent to which the budget appears reasonable and consistent with the proposed activities and intent of the program. For the Comprehensive application, matching funds should be listed on question 15 (estimated funding) of the application face page and section C of the Budget Information worksheet.

H. Other Requirements

Technical Reporting Requirements

Provide CDC with original plus two copies of the following:

1. Progress reports (semiannual);
2. Financial status report, no more than 90 days after the end of the budget period; and
3. Final financial and performance reports, no more than 90 days after the end of the project period. Send all reports to the Grants Management Specialist identified in the ''Where to Obtain Additional Information'' section of this announcement.

The following additional requirements are applicable to this program. For a complete description of each, see Attachment II in the application kit.

AR–7 Executive Order 12372 Review
AR–10 Smoke-Free Workplace Requirements
AR–11 Healthy People 2010
AR–12 Lobbying Restrictions

I. Authority and Catalog of Federal Domestic Assistance Number (CFDA)

This program is authorized under sections 301(a) and 317b(k)(2) of the Public Health Service (PHS) Act, [42 U.S.C. sections 241(a) and 247b(k)(2)], as amended.

The Catalog of Federal Domestic Assistance (CFDA) number is 93.945.

J. Where To Obtain Additional Information

This and other CDC announcements can be found on the CDC home page at Internet address http://www.cdc.gov. Click on Funding then click on Grants and Cooperative Agreements.

If you have questions after reviewing the contents of all documents, business management assistance may be obtained from: Van A. King, Grants Management Specialist, Grants Management Branch, Procurement and Grants Office, Announcement 00091, Centers for Disease Control and Prevention (CDC), 2920 Brandywine Road, Room 3000, Atlanta, GA 30341–4146, Telephone Number (770) 488–2751, Email address vbk5@cdc.gov.

For program technical assistance, contact: Nancy B. Watkins, Division of Adult and Community Health National, Center for Chronic Disease Prevention and Health Promotion, Centers for Disease Control and Prevention, 4770 Buford Highway, MS K–47, Atlanta, Georgia 30341–4146, Telephone Number (770) 488–8004, Email address naw1@cdc.gov.

Dated: May 22, 2000.

John L. Williams,

Director, Procurement and Grants Office, Centers for Disease Control and Prevention (CDC).

[FR Doc. 00–13243 Filed 5–25–00; 8:45 am]

BILLING CODE 4163–18–P

DEPARTMENT OF HEALTH AND HUMAN SERVICES

Centers for Disease Control and Prevention

Citizens Advisory Committee on Public Health Service Activities and Research at Department of Energy (DOE) Sites: Idaho National Engineering and Environmental Laboratory Health Effects Subcommittee: Meeting

In accordance with section 10(a)(2) of the Federal Advisory Committee Act (Pub. L. 92–463), the Agency for Toxic Substances and Disease Registry (ATSDR) and the Centers for Disease Control and Prevention (CDC) announce the following meeting.

Name: Citizens Advisory Committee on Public Health Service Activities and Research at DOE Sites: Idaho National Engineering and Environmental Laboratory Health Effects Subcommittee (INEELHES).

Times and Dates: 8:30 a.m.–5 p.m., June 13, 2000. 8:30 a.m.–12:30 p.m., June 14, 2000.

Place: Coeur d'Alene Hotel, 115 South Second Street, Coeur d'Alene Idaho 83814, telephone 208/765–4000, fax 208/664–7678.

Status: Open to the public, limited only by the space available. The meeting room accommodates approximately 60 people.

Background: Under a Memorandum of Understanding (MOU) signed in December 1990 with the Department of Energy (DOE) and replaced by an MOU signed in 1996, the Department of Health and Human Services (HHS) was given the responsibility and resources for conducting analytic epidemiologic investigations of residents of

communities in the vicinity of DOE facilities, workers at DOE facilities, and other persons potentially exposed to radiation or to potential hazards from non-nuclear energy production use. HHS has delegated program responsibility to CDC.

In addition, a memo was signed in October 1990 and renewed in November 1992 between ATSDR and DOE. The MOU delineates the responsibilities and procedures for ATSDR's public health activities at DOE sites required under sections 104, 105, 107, and 120 of the Comprehensive Environmental Response, Compensation, and Liability Act (CERCLA or ''Superfund''). These activities include health consultations and public health assessments at DOE sites listed on, or proposed for, the Superfund National Priorities List and at sites that are the subject of petitions from the public; and other health-related activities such as epidemiologic studies, health surveillance, exposure and disease registries, health education, substance-specific applied research, emergency response, and preparation of toxicological profiles.

Purpose: This subcommittee is charged with providing advice and recommendations to the Director, CDC, and the Administrator, ATSDR, regarding community, American Indian Tribes, and labor concerns pertaining to CDC's and ATSDR's public health activities and research at this DOE site. The purpose of this meeting is to provide a forum for community, American Indian Tribal, and labor interaction, and serve as a vehicle for community concerns to be expressed as advice and recommendations to CDC and ATSDR.

Matters To Be Discussed: Agenda items include an update on Pit 9 work; an update from the Risk Assessment Corporation (RAC); a report on the January 2000 National Cancer Institute workshop held in Rockville, Maryland on the health effects of I–131 related to Nevada Test Site fallout; and an update on the Evaluation Work Group project.

Agenda items are subject to change as priorities dictate.

Contact Person for More Information: Arthur J. Robinson, Jr., Executive Secretary, INEELHES, Radiation Studies Branch, Division of Environmental Hazards and Health Effects, NCEH, CDC, 4770 Buford Highway, NE, M/S F–35, Atlanta, Georgia 30341–3724, telephone 770/488–7040, fax 770/488–7044.

The Director, Management Analysis and Services Office, has been delegated the authority to sign **Federal Register** notices pertaining to announcements of meetings and other committee management activities, for both CDC and ATSDR.

Dated: May 19, 2000.

Julia M. Fuller,

Acting Director, Management Analysis and Services Office, Centers for Disease Control and Prevention (CDC).

[FR Doc. 00–13130 Filed 5–25–00; 8:45 am]

BILLING CODE 4163–18–P

DEPARTMENT OF HEALTH AND HUMAN SERVICES

Food and Drug Administration

[Docket No. 96M–0311]

Agency Information Collection Activities; Proposed Collection; Comment Request

AGENCY: Food and Drug Administration, HHS.

ACTION: Notice.

SUMMARY: The Food and Drug Administration (FDA) is announcing an opportunity for public comment on the proposed collection of certain information by the agency. Under the Paperwork Reduction Act of 1995 (the PRA), Federal agencies are required to publish notice in the **Federal Register** concerning each proposed collection of information, and to allow 60 days for public comment in response to the notice. This notice solicits comments on the collection of information contained in the Public Health Service (PHS) guideline entitled ''PHS Guideline on Infectious Disease Issues in Xenotransplantation.''

DATES: Submit written comments on the collection of information by July 25, 2002.

ADDRESSES: Submit written requests for single copies of the guideline entitled ''PHS Guideline on Infectious Disease Issues in Xenotransplantation'' to the Office of Communication, Training, and Manufacturers Assistance (HFM–40), Center for Biologics Evaluation and Research (CBER), Food and Drug Administration, 1401 Rockville Pike, Rockville, MD 20852–1448. Send one self-addressed adhesive label to assist that office in processing your requests. The document may also be obtained by mail by calling the CBER Voice Information System at 1–800–835–4709 or 301–827–1800, or by fax by calling the FAX Information System at 1–888–CBER–FAX or 301–827–3844.

Submit written comments on the collection of information to the Dockets Management Branch (HFA–305), Food and Drug Administration, 5630 Fishers Lane, rm. 1061, Rockville, MD 20852. All comments should be identified with the docket number found in brackets in the heading of this document.

FOR FURTHER INFORMATION CONTACT: Karen L. Nelson, Office of Information Resources Management (HFA–250), Food and Drug Administration, 5600 Fishers Lane, Rockville, MD 20857, 301–827–1482.

SUPPLEMENTARY INFORMATION:

I. Background

Under the PRA (44 U.S.C. 3501–3520), Federal agencies must obtain approval from the Office of Management and Budget (OMB) for each collection of information they conduct or sponsor. ''Collection of information'' is defined in 44 U.S.C. 3502(3) and 5 CFR 1320.3(c) and includes agency request or requirements that members of the public submit reports, keep records, or provide information to a third party. Section 3506(c)(2)(A) of the PRA (44 U.S.C. 3506(c)(2)(A)) requires Federal agencies to provide a 60-day notice in the **Federal Register** concerning each proposed collection of information, before submitting the collection to OMB for approval. To comply with this requirement, FDA is publishing notice of the proposed collection of information set forth in this document.

With respect to the following collection of information, FDA invites comments on: (1) Whether the proposed collection of information is necessary for the proper performance of FDA's functions, including whether the information will have practical utility; (2) the accuracy of FDA's estimate of the burden of the proposed collection of information, including the validity of the methodology and assumptions used; (3) ways to enhance the quality, utility, and clarity of the information to be collected; and (4) ways to minimize the burden of the collection of information on respondents, including through the use of automated collection techniques when appropriate, and other forms of information technology.

PHS Guideline on Infectious Disease Issues in Xenotransplantation

The statutory authority to collect this information is provided under sections 351 and 361 of the PHS Act (42 U.S.C. 262 and 264) and the provisions of the Federal Food, Drug, and Cosmetic Act that apply to drugs (21 U.S.C. 301 et seq.). This PHS guideline is revised based on public comment to a previous document entitled ''Draft Public Health Service (PHS) Guideline on Infectious Disease Issues in Xenotransplantation (August 1996),'' which published in the **Federal Register** of September 23, 1996 (61 FR 49919). The PHS guideline recommends procedures to diminish the risk of transmission of infectious agents to the xenotransplantation product recipient and the general public. The PHS guideline is intended to address public health issues raised by xenotransplantation, through identification of general principles of prevention and control of infectious diseases associated with

xenotransplantation that may pose a hazard to the public health. The collection of information described in this guideline is intended to provide general guidance to sponsors in: (1) The development of xenotransplantation clinical protocols, (2) the preparation of submissions to FDA, and (3) the conduct of xenotransplantation clinical trials. Also, the collection of information will help ensure that the sponsor maintains important information in a cross-referenced system that links the relevant records of the xenotransplantation product recipient, xenotransplantation product, source animal(s), animal procurement center, and significant nosocomial exposures. The PHS guideline describes an occupational health service program for the protection of health care workers involved in xenotransplantation procedures, caring for xenotransplantation product recipients, and performing associated laboratory testing. The guideline also describes public health needs for: (1) A pilot national xenotransplant data base, which is currently under development by the PHS; (2) a central PHS biologic specimen archive; and (3) the Secretary's Advisory Committee on Xenotransplantation (SACX), which is being developed and implemented by the Department of Health and Human Services (DHHS). These public health programs and this PHS guideline are intended to protect the public health and help ensure the safety of using xenotransplantation products in humans by preventing the introduction, transmission, and spread of infectious diseases associated with xenotransplantation.

Respondents to this collection of information are the sponsors of clinical studies of investigational xenotransplantation products under investigational new drug applications (IND's) and xenotransplantation product procurement centers, referred to as source animal facilities. Currently, there are 11 respondents who are sponsors of IND's, which include protocols for xenotransplantation in humans. Other respondents for this collection of information are 18 source animal facilities which provide source xenotransplantation product material to sponsors for use in human xenotransplantation procedures. These 18 source animal facilities keep medical records of the herds/colonies as well as the medical records of the individual source animal(s).

The PHS guideline proposes that certain specimens and records be maintained for 50 years beyond the date of the xenotransplantation. These include: (1) Records linking each xenotransplantation product recipient with relevant health records of the source animal, herd or colony, and the specific organ, tissue, or cell type included in or used in the manufacture of the product (3.2.7.1); (2) aliquots of serum samples from randomly selected animal and specific disease investigations (3.4.3.1); (3) source animal biological specimens designated for PHS use (3.7.1); animal health records (3.7.2), including necropsy results (3.6.4); and (4) recipients' biological specimens (4.1.2).

The retention period is intended to assist health care practitioners and officials in surveillance and in tracking the source of an infection, disease, or illness that might emerge in the recipient, the source animal, or the animal herd or colony after a xenotransplantation. Although the draft guideline discussed holding specimens and records indefinitely, comments described this recommendation as impractical and unfeasible.

The recommendation for maintaining records for 50 years is based on clinical experience with several human viruses that have presented problems in human to human transplantation and are therefore thought to share certain characteristics with viruses that may pose potential risks in xenotransplantation. These characteristics include long latency periods and the ability to establish persistent infections. Several also share the possibility of transmission among individuals through intimate contact with human body fluids. Human immunodeficiency virus (HIV) and Human T-lymphotropic virus are human retroviruses. They contain ribonucleic acid that is reverse-transcribed into deoxyribonucleic acid (DNA) using an enzyme provided by the virus and the cell machinery. That DNA can then be integrated into the cellular DNA. Both viruses establish persistent infections and have long latency periods before the onset of disease, 10 years and 40 to 60 years, respectively. The human hepatitis viruses are not retroviruses, but several share with HIV the characteristic that they can be transmitted through body fluids, can establish persistent infections, and have long latency periods, *e.g.*, approximately 30 years for Hepatitis C.

In addition, the PHS guideline recommends that a record system be developed that allows easy, accurate, and rapid linkage of information among the specimen archive, the recipient's medical records, and the records of the source animal for 50 years. If record systems are maintained in a computer data base, electronic backups should be kept in a secure office facility and backup on hard copy should be routinely performed (4.1.2.2). The development of such a record system would be a one-time burden. Such a system is intended to cross-reference and locate relevant records or recipients, source animals and facilities, and specimens of both the recipient and the source animal. Based on agency experience in establishing new, small volume, recordkeeping and tracking systems, we estimate approximately 16 hours would be necessary for each sponsor to set up the records system.

The total annual reporting and recordkeeping burden is estimated to be approximately 327 hours. The burden estimates are based on FDA's records of xenotransplantation-related IND's and estimates of time required to create an appropriate record system and to complete the various reporting and recordkeeping tasks described in the guideline. A total of 22 IND's have been submitted since 1994 resulting in an average of 4 IND submissions per year. A total of 87 patients have been treated over a 3-year period indicating there are on average 29 xenotransplantation product recipients per year. FDA does not expect the level of clinical studies using xenotransplantation to increase significantly in the next few years; therefore, the agency is using these historical figures in projecting burdens for the next 3 years.

FDA is requesting OMB approval for the following reporting and recordkeeping recommendations in the PHS guideline:

TABLE 1.—REPORTING RECOMMENDATIONS

PHS Guideline Section	Description
3.2.7.2	Notify sponsor or FDA of new archive site when source animal facility or sponsor ceases operations.
3.4	Standard operating procedures (SOP's) of source animal facility should be available to review bodies.
3.5.1	Include increased infectious risk in informed consent if source animal quarantine period of 3 weeks is shortened.
3.5.4	Sponsor to make linked records described in section 3.2.7 available for review.

TABLE1.—REPORTING RECOMMENDATIONS—Continued

PHS Guideline Section	Description
3.5.5	Source animal facility to notify clinical center when infectious agent is identified in source animal or herd after xenotransplantation product procurement.

TABLE 2.—RECORDKEEPING RECOMMENDATIONS

PHS Guideline Section	Description
3.2.7 and 4.3	Establish records linking each xenotransplantation product recipient with relevant records. Sponsor to maintain cross-referenced system that links all relevant records (recipient, product, source animal, animal procurement center, and nosocomial exposures).
3.4.2	Document results of monitoring program used to detect introduction of infectious agents which may not be apparent clinically.
3.4.3.2	Document full necropsy investigations including evaluation for infectious etiologies.
3.5.1	Justify shortening a source animal's quarantine period of 3 weeks prior to xenotransplantation product procurement.
3.5.2	Document absence of infectious agent in xenotransplantation product if its presence elsewhere in source animal does not preclude using it.
3.5.4	Add summary of individual source animal record to permanent medical record of the xenotransplantation product recipient.
3.6.4	Document complete necropsy results on source animals (50-year record retention).
3.7	Link xenotransplantation product recipients to individual source animal records and archived biologic specimens.
4.2.3.2	Record base-line sera of xenotransplantation health care workers and specific nosocomial exposure.
4.2.3.3 and 4.3.2	Keep a log of health care workers' significant nosocomial exposure(s).
4.3.1	Document each xenotransplant procedure.
5.2	Document location and nature of archived PHS specimens in health care records of xenotransplantation product recipient and source animal.

FDA estimates the burden for this collection of information as follows:

TABLE 3.—ESTIMATED ANNUAL REPORTING BURDEN[1]

PHS Guideline Section	No. of Respondents	Annual Frequency per Response	Total Annual Responses	Hours per Response	Total Hours
3.2.7.2[2]	18	0	0	0.5	0
3.2.7.2[2]	11	0	0	0.5	0
3.4[3]	11	0.4	4	0.08	0.3
3.5.1[4]	11	0.09	1	0.25	0.25
3.5.4[5]	11	2.6	29	0.5	14.5
3.5.5[4]	18	0.06	1	0.2	0.2
Total					15.25

[1] There are no capital costs or operating and maintenance costs associated with this collection of information.
[2] No animal facility or sponsor has ceased operations to date and none are expected to cease operation in the next several years.
[3] FDA's records indicate that an average of four IND's have been and are expected to be submitted per year.
[4] Has not occurred in the past 5 years and is expected to continue to be a rare occurrence.
[5] Based on 87 patients treated over the last 3 years, the average number of xenotransplantation product recipients per year is estimated to be 29.

TABLE 4.—ESTIMATED ANNUAL RECORDKEEPING BURDEN[1]

PHS Guideline Section	No. of Recordkeepers	Annual Frequency per Recordkeeping	Total Annual Records	Hours per Recordkeeper	Total Hours
3.2.7 and 4.3[2]	11	1	N/A	16	172
3.4.2[3]	11	15.1	166	3.77	41.5
3.4.3.2[4]	18	4.0	72	1.32	23.8
3.5.1[5]	11	0.09	(0–1)1	0.045	0.5
3.5.2[5]	11	0.09	(0–1)1	0.023	0.25
3.5.4	11	2.6	29	0.45	4.9
3.6.4[6]	11	5.3	58	1.32	14.5
3.7[6]	18	3.2	58	0.26	4.6
4.2.3.2[7]	11	27.3	300	4.64	51
4.2.3.2[5]	11	0.09	(0–1)1	0.015	0.17
4.2.3.3 and 4.3.2[5]	11	0.09	(0–1)1	0.015	0.17
4.3.1	11	2.6	29	0.66	7.25
5.2[8]	11	7.9	87	0.63	6.96
Total					327.6

[1] There are no capital costs or operating and maintenance costs associated with this collection of information.

[2] A one-time burden for setting up a recordkeeping system which rapidly links information regarding the specimen archive, the recipient's medical records, and source animals.

[3] Monitoring for sentinel animals (subset representative of herd) plus all source animals. There are approximately 6 sentinel animals per herd x 1 herd per facility x 18 facilities = 108 sentinel animals. There are approximately 58 source animals per year (see footnote 6 of this table); 108 + 58 = 166 monitoring records to document.

[4] Necropsy for animal deaths of unknown cause estimated to be approximately 4 per herd per year x 1 herd per facility x 18 facilities = 72.

[5] Has not occurred in the past 5 years and is expected to continue to be a rare occurrence.

[6] On average 2 source animals are used for preparing xenotransplantation product material for one recipient. The average number of source animals is 2 source animals per recipient x 29 recipients annually = 58 source animals per year. (See footnote 5 of table 3 of this document.)

[7] FDA estimates there are approximately 12 clinical centers doing xenotransplantation procedures x approximately 25 health care workers involved per center = 300 health care workers.

[8] Fifty-eight source animal records + 29 recipient records = 87 total records.

Because xenotransplantation is a relatively new area of medical science, potential problems and adverse effects are not well known. Because of the potential risk for cross-species transmission of infectious agents from source animals to patients, their close contacts, and the general public and the latency period of known human pathogenic persistent virus, the guideline recommends that health records be retained for 50 years. Since these records are medical records, the retention of such records for up to 50 years is not information subject to the PRA (5 CFR 1320.3(h)(5)). Also, because of the limited number of clinical studies with small patient populations, the number of records is small and, therefore, the capital and operating costs are expected to be insignificant at this time.

Many of the information collections described in this guideline are not new and can be found under existing regulations and, therefore, are not included in the hour burden estimates in tables 1 through 4 of this document. These information collections are included under the regulations and approved under the OMB control numbers as follows: (1) ''Current Good Manufacturing Practice for Finished Pharmaceuticals,'' 21 CFR 211.1 through 211.208, approved under OMB control number 0910–0139; (2) ''Investigational New Drug Application,'' 21 CFR 312.1 through 312.160, approved under OMB control number 0910–0014; and (3) information included in a license application, 21 CFR 601.1 through 601.3, approved under OMB control number 0910–0124. (Although it is possible that a xenotransplantation product may not be regulated as a biological product (*e.g.,* it may be regulated as a medical device), FDA believes, based on its knowledge and experience with xenotransplantation, that any xenotransplantation product subject to FDA regulation within the next 3 years will most likely be regulated as a biological product.) However, FDA recognized that some of the information collections go beyond approved collections; assessments for these burdens are included in tables 1 through 4.

In table 5 of this document, FDA identifies those collection of information activities that are already encompassed by existing regulations or are consistent with voluntary standards which reflect industry practice.

TABLE 5.—COLLECTION OF INFORMATION REQUIRED BY CURRENT REGULATIONS AND STANDARDS

PHS Guideline Section	Description of Collection of Information Activity	21 CFR Section (unless otherwise stated)
2.2.1	Document off-site collaborations	312.52
2.5	Sponsor ensure counseling patient + family + contacts	312.62(c)
3.1.1 and 3.1.6	Document well-characterized health history and lineage of source animals	312.23(a)(7)(a) and 211.84
3.1.8	Registration with and import permit from the Centers for Disease Control and Prevention	42 CFR 71.53
3.2.2	Document collaboration with accredited microbiology labs	312.52
3.2.3	Procedures to ensure the humane care of animals	9 CFR parts 1, 2, and 3 and PHS Policy[1]
3.2.4	Procedures consistent for accreditation by the Association for Assessment and Accreditation of Laboratory Animal Care International (AAALAC International) and consistent with the National Research Council's (NRC) Guide	AAALAC International Rules of Accreditation[2] and NRC Guide[3]
3.2.5, 3.4, and 3.4.1	Herd health maintenance and surveillance to be documented, available, and in accordance with documented procedures; record standard veterinary care	211.100 and 211.122
3.2.6	Animal facility SOP's	PHS Policy[1]
3.3.3	Validate assay methods	211.160(a)
3.6.1	Procurement and processing of xenografts using documented aseptic conditions	211.100 and 211.122
3.6.2	Develop, implement, and enforce SOP's for procurement and screening processes	211.84(d) and 211.122(c)
3.6.4	Communicate to FDA animal necropsy findings pertinent to health of recipient	312.32(c)
3.7.1	PHS specimens to be linked to health records; provide to FDA justification for types of tissues, cells, and plasma, and quantities of plasma and leukocytes collected	312.23(a)(6)
4.1.1	Surveillance of xenotransplant recipient; sponsor ensures documentation of surveillance program life-long (justify >2 yrs.); investigator case histories (2 yrs. after investigation is discontinued)	312.23(a)(6)(iii)(f) and (g), and 312.62(b) and (c)
4.1.2	Sponsor to justify amount and type of reserve samples	211.122
4.1.2.2	System for prompt retrieval of PHS specimens and linkage to medical records (recipient and source animal)	312.57(a)
4.1.2.3	Notify FDA of a clinical episode potentially representing a xenogeneic infection	312.32
4.2.2.1	Document collaborations (transfer of obligation)	312.52
4.2.3.1	Develop educational materials (sponsor provides investigators with information needed to conduct investigation properly)	312.50

TABLE 5.—COLLECTION OF INFORMATION REQUIRED BY CURRENT REGULATIONS AND STANDARDS—Continued

PHS Guideline Section	Description of Collection of Information Activity	21 CFR Section (unless otherwise stated)
4.3	Sponsor to keep records of receipt, shipment, and disposition of investigative drug; investigator to keep records of case histories	312.57 and 312.62(b)

[1] The ''Public Health Service Policy on Humane Care and Use of Laboratory Animals'' (http://www.grants.nih.gov/grants/olaw/references/phspol.htm).
[2] AAALAC International Rules of Accreditation (http://www.aaalac.org/html/rules.html).
[3] The NRC's ''Guide for the Care and Use of Laboratory Animals'' (1996).

II. Electronic Access

Persons with access to the Internet may obtain the guideline at http://www.fda.gov/cber/guidelines.htm.

Dated: May 23, 2000.

William K. Hubbard,

Senior Associate Commissioner for Policy, Planning, and Legislation.

[FR Doc. 00–13340 Filed 5–25–00; 8:45 am]

BILLING CODE 4160–01–F

DEPARTMENT OF HEALTH AND HUMAN SERVICES

Food and Drug Administration

[FDA 225–99–7000]

Memorandum of Understanding Between the Food and Drug Administration, the Centers for Disease Control and Prevention, the U.S. Department of Agriculture, the U.S. Department of Defense, and the Environmental Protection Agency

AGENCY: Food and Drug Administration, HHS.

ACTION: Notice.

SUMMARY: The Food and Drug Administration (FDA) is providing notice of a memorandum of understanding (MOU) between FDA, the Centers for Disease Control and Prevention, the U.S. Department of Agriculture, the U.S. Department of Defense, and the Environmental Protection Agency. The purpose of the MOU is to establish an interagency coordinating committee on animal production and food health with the goal of improving animal and public health.

DATES: The agreement became effective November 17, 1999.

FOR FURTHER INFORMATION CONTACT: Robert C. Livingston, Center for Veterinary Medicine (HFV–1), Food and Drug Administration, 7500 Standish Pl., Rockville, MD 20855, 301–594–5903.

SUPPLEMENTARY INFORMATION: In accordance with 21 CFR 20.108(c), which states that all written agreements and MOU's between FDA and others shall be published in the **Federal Register**, the agency is publishing notice of this MOU.

Dated: May 19, 2000.

William K. Hubbard,

Senior Associate Commissioner for Policy, Planning, and Legislation.

The MOU is set forth in its entirety as follows:

BILLING CODE 4160–01–F

MOU 225-99-7000

MEMORANDUM OF UNDERSTANDING

Between The Following Departments and Agencies

THE UNITED STATES DEPARTMENT OF AGRICULTURE
AGRICULTURAL MARKETING SERVICE
AGRICULTURAL RESEARCH SERVICE
ANIMAL AND PLANT HEALTH INSPECTION SERVICE
COOPERATIVE STATE RESEARCH, EDUCATION, AND EXTENSION SERVICE
ECONOMIC RESEARCH SERVICE
FOOD SAFETY AND INSPECTION SERVICE
FOREIGN AGRICULTURAL SERVICE
GRAIN INSPECTION, PACKERS AND STOCKYARDS ADMINISTRATION
OFFICE OF RISK ASSESSMENT AND COST-BENEFIT ANALYSIS

And

THE DEPARTMENT OF HEALTH AND HUMAN SERVICES
CENTERS FOR DISEASE CONTROL AND PREVENTION
and the
FOOD AND DRUG ADMINISTRATION (FDA)
including FDA's
CENTER FOR FOOD SAFETY AND APPLIED NUTRITION
CENTER FOR VETERINARY MEDICINE

And

THE DEPARTMENT OF DEFENSE
UNITED STATES ARMY VETERINARY SERVICE

And

ENVIRONMENTAL PROTECTION AGENCY
OFFICE OF PREVENTION, PESTICIDES, AND TOXIC SUBSTANCES
and the
OFFICE OF WATER

RELATIVE TO

INTERAGENCY COORDINATING COMMITTEE ON ANIMAL PRODUCTION AND FOOD SAFETY

The parties to this Memorandum of Understanding are the following agencies of the United States Department of Agriculture: the Agricultural Marketing Service, the Agricultural Research Service, the Animal and Plant Health Inspection Service, the Cooperative State Research, Education and Extension Service, the Economic Research Service, the Food Safety and Inspection Service, the Foreign Agricultural Service; the Grain Inspection, Packers and Stockyards Administration, and the Office of Risk Assessment and Cost-Benefit Analysis; the following agencies of the Department of Health and Human Services: the Food and Drug Administration's Center for Food Safety and Applied Nutrition and Center for Veterinary Medicine, and the Centers for Disease Control and Prevention; the Department of Defense's United States Army Veterinary Service; and the Environmental Protection Agency's Office of Prevention, Pesticides, and Toxic Substances and the Office of Water;

WHEREAS, the parties to the Memorandum of Understanding agree that the public policy issues surrounding food animal and public health and the marketing of food animals are integral to the work of each of the parties;

WHEREAS, the parties recognize that food animal production practices including production of livestock, poultry, eggs, and farm-raised fish may impact food safety;

WHEREAS, it is important to the success of the mission of each of the parties that each party know about food safety activities being undertaken by other parties and that the such activities of each of the parties be coordinated;

WHEREAS, President William J. Clinton has challenged those federal agencies involved in food safety/public health to build consensus and to identify opportunities to better use their collective resources and expertise, and to strengthen partnerships with all stakeholders;

WHEREAS, the parties to this agreement recognize the fundamental relationship between food safety and public health and food animal health and production practices;

THEREFORE, the parties to this Memorandum of Understanding agree to cooperate through an orderly exchange of information, jointly held meetings, and the appointment of liaison personnel and committees to gather and exchange background information relating to individual agency policies or use in risk analysis, to exchange information about ongoing agency activities, and to increase interaction among food animal health and public health experts with the goal of improving animal and public health, and for other purposes in the interest of the parties to improve the safety of food produced from animals.

I. RATIONALE

All federal agencies share a common objective of serving the American public. Although each agency has a defined set of responsibilities, it is only when they work in harmony

that the government is most efficient. The safety of food depends upon the integrated efforts of those agencies responsible for animal health, animal production, human health and food derived from livestock and aquaculture, including animal production practices on land and in water which may impact food safety. The complexity of the farm-to-table chain requires communication, coordination and cooperation among all these organizations in order to efficiently, effectively and rapidly achieve respective goals as well as to provide consumers with the safest, most abundant and economical food supply in the world.

Examples of this approach include the 1997 Presidential Food Safety Initiatives on produce and animal products. Therein, the President directed the many involved agencies to work cooperatively to develop systems improving food safety.

The signatory agencies to this Memorandum of Understanding share a common interest in maintaining a safe, wholesome and affordable food supply. While each signatory's mission area may focus on different aspects of animal production and food safety, the agencies agree that sharing food safety information, coordinating activities, and improving collaboration will collectively enhance the success of each agency's mission.

II. RELATIONSHIPS OF PARTIES

The **Agricultural Marketing Service** (AMS), USDA, administers standardization, grading, certification, promotion, and regulatory programs. Grading and classification services are provided to certify the grade and quality of meat, egg and poultry products. *See* 21 U.S.C. 601 *et seq.*, 451 *et seq.*, and 1031 *et seq.* These grading services are provided to buyers and sellers of live cattle, swine, sheep, poultry, rabbits, and other meat, egg and poultry products. These services are voluntary and provided upon request on a fee-for-service basis. The AMS also administers the Pesticide Data Program, in cooperation with States, in which fresh fruits and vegetables are sampled and analyzed for pesticide residues. *See* 7 U.S.C. 136i-1. Under a government-wide quality assurance program, AMS is responsible for developing specifications for government procurement of food used by the military and for civilians. The AMS is responsible for the development of an efficient agricultural transportation system for rural America. *See* 7 U.S.C. 1622. The system begins at the farm gate and moves agricultural and other rural products through the Nation's highways, railroads, etc., into domestic and international marketplaces. The AMS is also developing national organic standards. *See* 7 U.S.C. 6501-6522.

The **Agricultural Research Service** (ARS), USDA, is responsible for carrying out research programs to assist other USDA agencies in meeting their statutory objectives. Accordingly, it is responsible for developing research methodologies relating to both animal health and animal production food safety.

The **Animal and Plant Health Inspection Service** (APHIS), USDA, was established to conduct regulatory and control programs to protect and improve animal and plant health.

The agency administers Federal laws and regulations pertaining to plant and animal health and quarantine, and the control and eradication of plant and animal pests and diseases. APHIS is authorized to cooperate with State and local jurisdictions in achieving these objectives.

The **Center for Food Safety and Applied Nutrition** (CFSAN), Food and Drug Administration (FDA), U.S. Department of Health and Human Services (USHHS), is charged with enforcement of the Federal Food, Drug and Cosmetic Act (FD & C Act), 21 U.S.C. 301 et. seq., and the Public Health Service Act. 42 U.S.C. 201 et. seq., Under the FD & C Act, CFSAN is responsible for the regulation of foods for human consumption and cosmetics. The mission of the center is to (1) ensure that food is safe, (2) emphasize a preventive approach to protecting public health, (3) promote sound nutrition, (4) ensure that food and cosmetic products are honestly and accurately labeled, and (5) encourage industry innovation while upholding safety standards and maintaining consumer protection. CFSAN has responsibility for ensuring the general safety and wholesomeness of all human food except meat, poultry and egg products.

The **Centers for Disease Control and Prevention** (CDC) of USHHS is the Federal agency charged with protecting the public health of the Nation by providing leadership and direction to prevent and control diseases and other preventable conditions and to respond to public health emergencies pursuant to Section 301 of the Public Health Service Act (42 U.S.C. 241). It is composed of 11 major operating components including the National Center for Infectious Diseases. The CDC administers national programs for the prevention and control of communicable and vector-borne diseases, injury, and other preventable conditions. CDC develops and implements programs in chronic disease prevention and control in consultation with State and local health departments.

The **Center for Veterinary Medicine (CVM)**, FDA, USHHS, has responsibility under the Federal FD & C Act for regulation of animal drugs and feeds, including the premarket approval of veterinary drugs and feed additives, and regulating the manufacture and distribution of animal drugs and feeds. Before approving an animal drug, CVM reviews the sponsor's data to assure the drug's effectiveness as well as safety to the animal being treated and to humans consuming food derived from animals treated with the drug. To assure human food safety, CVM sets safe concentration and tolerance levels for the approved drugs that may appear in animal tissue at the time of slaughter and investigates violations of residues above safe tolerance levels. CVM also ensures that animal feed is safe and wholesome and is free of illegal drug, pesticide, and industrial chemical residues. To address the potential public health risks from antibiotic resistant pathogens and resistance genes, in 1996 CVM established and coordinated the National Antimicrobial Resistance Monitoring System (NARMS), a collaboration between FDA, CDC and USDA/ARS. NARMS currently monitors shifts in susceptibility to antimicrobial drugs among Salmonella from animal isolates and Salmonella, E. coli O157 and Campylobacter from human isolates. CVM plans to greatly expand the program under the Food Safety Initiative.

The **Cooperative State Research, Education, and Extension Service** (CSREES), USDA, links the research and education resources and activities of USDA and works with educational institutions in each state and territory. CSREES provides focus to advance a global system of research, extension, and higher education in food and agricultural sciences and in related environmental and human sciences. The CSREES mission emphasizes partnerships with the public and private sector to maximize the effectiveness of limited resources.

The **Department of Defense** (DOD) also has defined functions impacting public health (food safety). The United States Army Veterinary Service, the United States Army Center for Health Promotion and Preventive Medicine, and the United States Air Force Biomedical Science Corps conduct training in public health, including food safety; inspect and test food processing facilities and delivered products; manage community public health programs; and coordinate these programs with other federal agencies. The U.S. Army Veterinary Service also participates in national/regional responses to natural and disease emergencies impacting public health, animal health, and economic stability. The DOD also contributes to food safety through research and surveillance on pathogens associated with the production and consumption of foods.

The mission of the **Economic Research Service** (ERS), USDA, is to provide agricultural economic and other agriculture-related social science information and analysis for public and private decisions on agriculture, food, natural resources, and rural America issues. ERS produces such information for use by the general public and to help the executive and legislative branches of the Federal government develop, administer, and evaluate agricultural and rural policies and programs.

The **Food Safety and Inspection Service** (FSIS), USDA, under the authority of the FMIA, PPIA, and the EPIA is responsible for the wholesomeness and safety of meat, poultry, and egg products intended for human consumption. This is accomplished by continuous inspection at slaughtering and processing establishments. The inspections include the sampling and analyzing of edible tissues taken from livestock and poultry at the time of slaughter to assure that meat and poultry do not contain adulterants such as drugs, pesticides, other industrial chemicals and harmful foodborne pathogens. FSIS also takes egg product samples to test for Salmonella. FSIS seeks to reduce the incidence of foodborne human pathogens on meat, poultry and egg products in order to reduce the incidence of foodborne.

The **Foreign Agricultural Service** (FAS), USDA, represents the diverse interests of US farmers and the food and agricultural sector abroad. It collects, analyzes, and disseminates information about global supply and demand, trade trends, and emerging market opportunities. FAS seeks improved market access for U.S. products and implements programs designed to build new markets and to maintain the competitive position of U.S. products in the global marketplace. In addition, FAS coordinates food safety issues for USDA in Washington, D.C. and overseas, as they impact on foreign trade.

The **Grain Inspection, Packers and Stockyards Administration** (GIPSA), USDA, plays a key part in USDA's efforts to ensure a productive and competitive global marketplace for U.S. agriculture products. One of GIPSA's program, the Packers and Stockyards Programs, ensures open and competitive markets for livestock, meat, and poultry. The other program, the Federal Grain Inspection Service, provides the U.S. grain market with Federal quality standards and a uniform system for applying them. GIPSA, as an impartial third party in American agriculture, helps ensure a fair competitive marketing system for all involved in the merchandising of grain and related products, livestock, meat and poultry.

The **Office of Risk Assessment and Cost-Benefit Analysis,** (ORACBA), USDA, is part of the Office of the Chief Economist. The primary mission of ORACBA is to ensure that major regulations proposed by USDA, which primarily affect human health, safety, or the environment, are based on sound scientific and economic analysis. Besides assuring that statutory requirements for risk assessment are met, ORACBA provides guidance and technical assistance and coordinates risk analysis work across USDA.

The U.S. Environmental Protection Agency, (EPA), **Office of Prevention, Pesticides, and Toxic Substances** (OPPTS) is responsible for registering pesticides, many of which control microorganisms that cause foodborne illness. Through ongoing testing and rigorous review of submitted data, OPPTS ensures the efficacy of antimicrobial pesticides that prevent growth of pathogenic microorganisms on raw agricultural commodities (fruits and vegetables) and on certain surfaces that contact food during processing. These actions are central to reducing the public's risk of foodborne disease.

The U.S. Environmental Protection Agency (EPA), **Office of Water**, is the Federal Agency responsible for insuring that drinking waters in the United States are safe for human consumption. Pursuant to the Safe Drinking Water Act, 42 U.S.C. 300 (f) et seq., the EPA provides regulations on acceptable treatment and monitoring of drinking water from chemically or microbiologically contaminated surface and ground water sources to protect public health. Pursuant to the Clean Water Act, 33 U.S.C. 1251 et. seq., the EPA provides for the protection of fresh and marine waters so they are swimmable and fishable. EPA also has responsibilities for ensuring adequate treatment and control of infectious disease contaminants that may occur in human and industrial wastes, manures and other waste products that can imperil the safety of ambient water resources. EPA conducts risk assessments on pathogens in various water exposure scenarios, provides research to develop analytical methods, conducts evaluation of pathogen occurrence and human exposure/health effects, and develops improved water, wastewater, and biosolids treatment technologies for pathogen reduction or elimination.

III. Establishment of Committee

The aforementioned agencies and centers (hereinafter "agencies" or the "parties") agree to establish an Interagency Coordinating Committee on Animal Production and Food Safety.

IV. Purpose and Function of the Committee

The purpose and function of the Interagency Coordinating Committee on Animal Production and Food Safety shall be:

(a) To provide a forum where member agencies share information related to food safety, animal health, marketing and production, environmental safety, research, educational initiatives, risk analysis, policies, programs and other activities which may potentially impact public health and animal production practices.

(b) To promote coordination of agency activities relating to (a) above, including policy development, rulemaking, educational initiatives, risk analysis and research; and

(c) To promote collaboration whereby agencies, where authorized, might enter into joint activities which would make the most effective use of resources and avoid unnecessary duplication of activities relating to animal production practices and food safety.

V. Organization of the Committee

The parties hereby establish the Interagency Coordinating Committee on Animal Production and Food Safety, which shall consist of a **Steering Committee** and a **General Committee.**

The **Steering Committee** shall consist of one representative from each of the signatories, who shall be appointed by the Agency Administrator or Center Director or other authorized official of the agencies, who are parties to this Agreement. The Steering Committee provides leadership and logistical support for the work of the Interagency Coordinating Committee on Animal Production and Food Safety. The Steering Committee shall facilitate and coordinate the activities of agencies, where the agencies pursue joint action. Members of the Steering Committee are the official conduit to the agency Administrators or center Directors, as appropriate, for the determination of whether an agency or center shall commit resources for a project or activity, in accordance with each Agency's or Center's authorities. The Steering Committee may set up subcommittees to coordinate projects, as it shall deem appropriate. The Chairperson of the Steering Committee shall be chosen by the membership of the Steering Committee for a one-year term.

The purpose of the **General Committee** is to provide a forum to share information and to promote interagency collaboration and coordination of issues, including those issues prioritized by the Steering Committee. The General Committee may make recommendations to the Steering Committee. The General Committee shall consist of

representatives from each of the member agencies. The members of the General Committee shall be designated either by the Agency Administrator or Center Director, or by the member agency Steering Committee representative, as determined by each member agency. A member agency may have more than one representative on the General Committee, but no more than three per agency. Official representatives to the General Committee may ask appropriate staffs of their agencies to attend General Committee meetings to ensure adequate information sharing. Agencies that are not signatories to this Memorandum of Understanding may become members of the General Committee upon application to, or nomination by a signatory agency, and approval by the Steering Committee. The Chairperson of the General Committee shall be chosen by the membership of the General Committee for a one-year term.

There shall be an **Executive Secretary** appointed by the Steering Committee for the purpose of supporting the activities of the Interagency Coordinating Committee on Animal Production and Food Safety. The Executive Secretary shall be responsible for making meeting arrangements, organizing committee and sub-committee activities, and publishing committee reports.

VI. Sunset of the Committee

The Interagency Coordinating Committee on Animal Production and Food Safety will cease to exist five years after the signature of all of the parties, but may be re-authorized and thereby extended through amendment of this Memorandum of Understanding by the signatories.

VII. General Provisions

It is mutually agreed and understood by and among the parties to this Agreement that:

A. Specific work projects or activities that involve transfer of funds, services, or property among the parties will require execution of separate interagency agreements, contingent upon availability of funds as appropriated by Congress. Each subsequent agreement or arrangement involving transfer of funds, services, or property among the parties must comply with all applicable statutes and regulations, including those statutes and regulations governing procurement activities, and must be authorized by appropriate statutory authority.

B. This Memorandum of Understanding in no way restricts the parties from participating in similar activities or arrangements with other public or private agencies, organizations, or individuals.

C. Nothing in this Memorandum of Understanding supersedes any other memorandum of understanding held by any of the participating agencies.

D. Nothing in this Memorandum of Understanding shall obligate the parties to expend appropriations to enter into any contract or other obligations. Each party

to this Memorandum of Understanding shall handle its own activities and utilize its own resources, including expenditure of its own funds. This Memorandum of Understanding is neither a funds obligation or funds transfer document.

E. This Memorandum of Understanding will become effective upon the signature of all of the parties and shall remain in effect for 5 years from the date of execution. This Memorandum of Understanding may be extended or amended upon written request of any party hereto and the subsequent written concurrence of all of the parties. Parties' participation in the Memorandum of Understanding may be terminated by providing 60-day written notice to all the other parties. Additional parties may be added to this Memorandum of Understanding with the agreement of the signatories.

F. This Memorandum of Understanding is intended only to improve the internal management of the executive branch and is not intended to, nor does it create any right, benefit, or trust responsibility, substantive or procedural, enforceable at law or equity by a party against the United States, its agencies, its officers, or any person.

G. The terms of this Memorandum of Understanding are not intended to be enforceable by any party other than the signatories.

The following member agencies have agreed to the aforementioned Memorandum of Understanding establishing the Interagency Coordinating Committee on Animal Production and Food Safety on the dates set forth below.

APPROVED AND ACCEPTED FOR THE
U.S. DEPARTMENT OF AGRICULTURE
FOOD SAFETY AND INSPECTION SERVICE

BY: _____
THOMAS J. BILLY
ADMINISTRATOR
DATE: 11/17/99

APPROVED AND ACCEPTED FOR THE
U.S. DEPARTMENT OF HEALTH AND
HUMAN SERVICES
FOOD AND DRUG ADMINISTRATION
CENTER FOR VETERINARY MEDICINE

BY: _____
STEPHEN F. SUNDLOF
DIRECTOR
DATE: 11/17/99

APPROVED AND ACCEPTED FOR THE U.S. DEPARTMENT OF AGRICULTURE AGRICULTURAL RESEARCH SERVICE

BY: Floyd P. Horn
FLOYD HORN
ADMINISTRATOR
DATE: 5-25-99

APPROVED AND ACCEPTED FOR THE U.S. DEPARTMENT OF HEALTH AND HUMAN SERVICES, CENTERS FOR DISEASE CONTROL PREVENTION, NATIONAL CENTER FOR INFECTIOUS DISEASES

BY: James M Hughes
JAMES M. HUGHES
DIRECTOR
DATE: 9/16/99

APPROVED AND ACCEPTED FOR THE U.S. DEPARTMENT OF AGRICULTURE COOPERATIVE STATE RESEARCH, EDUCATION, AND EXTENSION SERVICE

BY: Colien Hefferan, acting
COLIEN HEFFERAN
ADMINISTRATOR
DATE: May 17, 1999

APPROVED AND ACCEPTED FOR THE U.S. DEPARTMENT OF AGRICULTURE AGRICULTURAL MARKETING SERVICE

BY:
ENRIQUE FIGUEROA
ADMINISTRATOR
DATE: 5-17-99

APPROVED AND ACCEPTED FOR THE U.S. DEPARTMENT OF AGRICULTURE GRAIN INSPECTION, PACKERS AND STOCKYARDS ADMINISTRATION

BY: James R. Baker
JAMES R. BAKER
ADMINISTRATOR
DATE: 1-20-99

APPROVED AND ACCEPTED FOR THE U. S. DEPARTMENT OF DEFENSE DEPARTMENT OF THE ARMY

BY: John J. Cuddy
MAJOR GENERAL JOHN J. CUDDY
DEPUTY SURGEON GENERAL
DATE: 12-23-98

APPROVED AND ACCEPTED FOR THE ENVIRONMENTAL PROTECTION AGENCY OFFICE OF PREVENTION, PESTICIDES, AND TOXIC SUBSTANCES

BY: Susan H. Wayland
SUSAN H. WAYLAND
DEPUTY ASSISTANT ADMINISTRATOR
DATE: 8/9/99

APPROVED AND ACCEPTED FOR THE ENVIRONMENTAL PROTECTION AGENCY OFFICE OF WATER

BY:
J. CHARLES FOX
ASSISTANT ADMINISTRATOR
DATE: 6/7/99

APPROVED AND ACCEPTED FOR THE U.S. DEPARTMENT OF AGRICULTURE OFFICE OF RISK ASSESSMENT AND COST BENEFIT ANALYSIS

BY: _____
ALWYNELLE S. AHL
DIRECTOR

DATE: 2/18/99

APPROVED AND ACCEPTED FOR THE U.S. DEPARTMENT OF AGRICULTURE FOREIGN AGRICULTURAL SERVICE

BY: _____ for TJG
Timothy J. Galvin
Administrator

DATE: 4/28/99

APPROVED AND ACCEPTED FOR THE U.S. DEPARTMENT OF AGRICULTURE ANIMAL AND PLANT HEALTH INSPECTION SERVICE

BY: _____
CRAIG A. REED
ADMINISTRATOR

DATE: 11/17/99

APPROVED AND ACCEPTED FOR THE U.S. DEPARTMENT OF AGRICULTURE ECONOMIC RESEARCH SERVICE

BY: _____
SUSAN OFFUTT
ADMINISTRATOR

DATE: 3/5/99

APPROVED AND ACCEPTED FOR THE U.S. DEPARTMENT OF HEALTH AND HUMAN SERVICES, FOOD AND DRUG ADMINISTRATION CENTER FOR FOOD SAFETY AND APPLIED NUTRITION

BY: _____
JOSEPH A. LEVITT
DIRECTOR

DATE: 11/17/99

[FR Doc. 00–13208 Filed 5–25–00; 8:45 am]
BILLING CODE 4160–01–C

DEPARTMENT OF HEALTH AND HUMAN SERVICES

Indian Health Service

List of Recipients of Indian Health Scholarships Under the Indian Health Scholarship Program

The regulations governing Indian Health Care Improvement Act Programs (Pub. L. 94–437) provide at 42 CFR 36.334 that the Indian Health Service shall publish annually in the **Federal Register** a list of recipients of Indian Health Scholarships, including the name of each recipient, school and tribal affiliation, if applicable. These scholarships were awarded under the authority of Sections 103 and 104 of the Indian Health Care Improvement Act, 25 U.S.C. 1613–1613a, as amended by the Indian Health Care Amendments of 1988, Pub. L. 100–713.

The following is a list of Indian Health Scholarship Recipients funded under Sections 103 and 104 for Fiscal Year 1999:

Abertia, Lynn Ann, Arizona State University, Pueblo of Isleta
Ables, Millicent Elaine, University of Kansas, Choctaw Nation of Oklahoma
Abold-Arellano, Carol Ann, University of South Dakota, Oglala Sioux of the Pine Ridge Reservation
Adams, Daniel Robert, North Dakota State University, Sisseton-Wahpeton Sioux Tribe
Alexander, Andrea Lynn, Oklahoma State University—Ada, Seminole Nation of Oklahoma
Alexander, Lisa Kalliah, Washington State University/Vancouver School of Medicine, Confederated Tribes of the Grand Ronde
Allen, Gwen Vera, Salish Kootenai College, Confederated Tribes of the Colville Reservation
Allen, Toni Lee, University of Oklahoma, Choctaw Nation of Oklahoma
Allery-Decoteau, Crystal Vernelle, Minot State University, Turtle Mountain Band of Chippewa Indians
Allery, Cynthia Ann, University of North Dakota, Turtle Mountain Band of Chippewa Indians
Allick, Albert Philip, University of Minnesota-Duluth, Turtle Mountain Band of Chippewa Indians
Allison, Rochelle Jade, Mesa Community College, Navajo Tribe of AZ, NM, & UT
Ammesmaki, Frank P., University of North Dakota, Fond du Lac Band—MN Chippewa
Anderson, Debbie Ann, Salish-Kootenai Community College, Confederated Salish & Kootenai Tribes
Anderson, Lisa Dawn, College of St. Scholastica, Bois Forte Band—MN Chippewa
Anderson, Sandra Dee, Mesa Community College, Navajo Tribe of AZ, NM, & UT
Anderson-McMillan, Tarina Kay, University of Southern Mississippi, Mississippi Band of Choctaw Indians
Andrews, Jananna Dove, University of Alaska, Teller Native Village
Antonio, John Emery, University of New Mexico—Albuquerque, Pueblo of Laguna, NM
Arneson, Richelle Marie, University of Washington, Tlingit & Haida Indians Tribes, AK
Arviso, Angela, University of New Mexico, Navajo Tribe of AZ, NM, & UT
Ashley, Jeannette, New Mexico State University—Las Cruces, Navajo Tribe of AZ, NM, & UT
Atcitty, Nicole Robin, University of New Mexico—Gallup, Navajo Tribe of AZ, NM, & UT
Bacoch, Michaele, University of the Pacific, Big Pine Paiute Shoshone
Barber, Tina, Northern Arizona University, Navajo Tribe of AZ, NM, & UT
Bark, Linda Marie, University of Arkansas, Confederated Tribes of the Colville Reservation
Barkhurst, Kip, University of New Mexico, Navajo Tribe of AZ, NM, & UT
Barnes, Carmen Rose, University of New Mexico, Confederated Salish & Kootenai Tribes
Barnes, Kellie Elizabeth, University of Oklahoma, Chickasaw Nation of Oklahoma
Bartholomew, Michael Lee, Dartmouth Medical School, Kiowa Of Oklahoma
Bartmess, Valene Nancy, University of Oklahoma, Muskogee (Creek) Nation of Oklahoma
Beard, R. Lacy, University of Oklahoma—Norman, Choctaw Nation of Oklahoma
Begay, Andreana, University of New Mexico—Gallup, Navajo Tribe of AZ, NM, & UT
Begay, Bryant, Apollo College, Navajo Tribe of AZ, NM, & UT
Begay, Helena Elsie, Phoenix College, Navajo Tribe of AZ, NM, & UT
Begay, Miranda, University of New Mexico, Navajo Tribe of AZ, NM, & UT
Begay, Monica Calley, Colorado State University, Navajo Tribe of AZ, NM, & UT
Begay, Paula Moiselle, Weber State University, Navajo Tribe of AZ, NM, & UT
Begay, Sarah Jane, New Mexico Highland University, Navajo Tribe of AZ, NM, & UT
Begay, Stephanie Ann, University of New Mexico, Navajo Tribe of AZ, NM, & UT
Begay, Stephanie R., University of New Mexico, Navajo Tribe of AZ, NM, & UT
Begay, Tamana, University of California—San Francisco, Navajo Tribe of AZ, NM, & UT
Begaye, Wahaila Nizhoni, University of Utah, Navajo Tribe of AZ, NM, & UT
Behymer, Virginia May, University of Alaska—Anchorage, Aleut
Belgarde, Vita Ann, University of North Dakota, Turtle Mountain Band of Chippewa Indians
Bell, Jason Burton, University of North Dakota, Three Affiliated Tribes of the Fort Berthold Reservation
Ben, Elaine Ann, University of New Mexico, Navajo Tribe of AZ, NM, & UT
Ben, Lydia, Northern Arizona University, Navajo Tribe of AZ, NM, & UT
Benally, Annisa, New Mexico Highland University, Navajo Tribe of AZ, NM, & UT
Benally, Cheryl Lynn, Pima Co. Community College, Navajo Tribe of AZ, NM, & UT
Benally Dorena, San Juan Community College, Navajo Tribe of AZ, NM, & UT
Benally, Max Joe, Northern Arizona University, Navajo Tribe of AZ, NM, & UT
Benally, Romancelita, University of Arizona, Navajo Tribe of AZ, NM, & UT
Benton, Mario, University of Arizona/Tucson, Round Valley Indian Tribes
Bercier, Christine Marie, University of North Dakota, Turtle Mountain Band of Chippewa Indians
Berg, Ida, University of Phoenix, Navajo Tribe of AZ, NM, & UT
Berryhill-Baker, Tishanda Leigh, Northeastern State University, Muskogee (Creek) Nation of Oklahoma
Bia, Gabriel Tyler, University of New Mexico, Navajo Tribe of AZ, NM, & UT
Bighorn, Lisa Elaine, University of Colorado—Denver, Assiniboine & Sioux of Fort Peck, MT
Bighorn, Praire Rose, Rocky Mountain College, Assiniboine & Sioux of Fort Peck, MT
Billy, Vermonica, San Juan Community College, Navajo Tribe of AZ, NM, & UT
Blair, Wendy Suzanne, University of Texas Medical School at San Antonio, Comanche of Oklahoma
Boatwright, Melinda Lea, East Central University, Choctaw Nation of Oklahoma

Boloz, Angelita Colleen, University of New Mexico, Navajo Tribe of AZ, NM, & UT
Boot, Maryjo, University of Arizona College of Pharmacy, Pueblo of Zuni Tribe, NM
Booth, Geri Lynn, Bellin College of Nursing, Lac Courte Oreilles Band of Lake Superior Chippewa
Booth, Loretta M. Rie, Pacific University College, Cheyenne River Sioux
Bourque-Wilton, Leanna Shere, Lake Superior State University, Sault Ste. Marie Tribe—Chippewa
Boyd, Cassandra Iva, University of New Mexico—Gallup, Navajo Tribe of AZ, NM, & UT
Bradley, Stephanie, East Carolina University, Eastern Band Cherokee of NC
Brandt, Julie Marie, University of the Health Sciences College, Iowa Tribe of KS & NE
Breland, Kylie Lea, University of North Dakota, Turtle Mountain Band of Chippewa Indians
Briere, Delmar Lee, University of North Dakota, Turtle Mountain Band of Chippewa Indians
Briggs, Misty Elaine, Northeastern State University, Cherokee Nation of Oklahoma
Brinson, Timothy James, East Central University, Citizen Band Potawatomi of Oklahoma
Briones, Rosinna, Arizona Heart Institute Foundation, Salt River Pima-Maricopa Indian Community
Brooks, Shelly Beth, University of Arkansas—Fayetteville, Cherokee Nation of Oklahoma
Brosel, Conrad Carl, University of Wisconsin, Oneida of Wisconsin
Brown, Gerald Ray, Oklahoma State University, Cherokee Nation of Oklahoma
Brown, Ryan David, University of Oklahoma, Choctaw Nation of Oklahoma
Bruce, Dawn Marie, University of North Dakota, Turtle Mountain Band of Chippewa Indians
Bruce, Troy Alan, Presentation College, Turtle Mountain Band of Chippewa Indians
Brunoe, Carnella Lynn, Oregon Health Sciences University, Pueblo of Laguna
Burk, Kristi Carroll, Fort Lewis College, Alaskan/Not Specified
Burnette, Ronald, New Mexico State University, White Mountain Apache Tribe
Bush, Gerald Ray, University of Arizona College of Medicine, White Mountain Apache Tribe
Butterfly, Glenn Curtis, Blackfeet Community College, Blackfeet Tribe
Cain, Marcia L., University of Montana School of Medicine, Sitka Tribe Community Association
Caldwell, Troy Tinsley, University of Oklahoma, Cherokee Nation of Oklahoma
Campbell, Gabriel Antonio, University of North Dakota, Confederated Salish & Kootenai
Campbell, Jamie Renae, East Central University, Muskogee (Creek) Nation of Oklahoma
Camplain-Guthrie, Jamie Lynn, University of Oklahoma Dental School, Choctaw Nation of Oklahoma
Camplain-Sudderth, Lisa Nichole, University of Oklahoma Health Science Center, Choctaw Nation of Oklahoma
Carpenter, April Rachelle, University of Oklahoma HSC, Chickasaw Nation of Oklahoma
Carroll, Ian Lorne, University of Washington School of Medicine, Alaskan/Not Specified
Cary, Brenda Lee, University of Minnesota—Duluth, Oneida of Wisconsin
Charles, Tracey Roseann, University of Tennessee—Memphis, Choctaw Nation of Oklahoma
Charlo, Joseph Donald, University of Montana, Confederated Salish & Kootenai Tribes
Chatter, Teddy Duke, University of Utah, Navajo Tribe of AZ, NM, & UT
Chimoni, Reinette, University of New Mexico, Zuni Tribe
Christofferson, Melissa Renee, Bethel College, White Earth Band—Minnesota Chippewa
Chythlook, William T., Loma Linda University, Alaskan
Clancy, Venessa Mae, Salish-Kootenai Community College, Assiniboine & Sioux of Fort Peck, MT
Clark, Doreen June, Carroll College, Barrow Native Village
Clark, Dorrance Dean, University of Michigan Dental School, Assiniboine & Sioux of Fort Peck, MT
Clarke, Alberta, Dine College, Navajo Tribe of AZ, NM, & UT
Clauschee-Freeland, Rachel Sue, Grand Canyon College, Navajo Tribe of AZ, NM & UT
Clay, Rondella Evelyn, East Central Oklahoma State University, Three Affiliated Tribes of the Fort Berthold Reservation
Cloer-Myers, Melissa Lynn, University of Columbia, Choctaw Nation of Oklahoma
Comnick, Kymberlee Rae, Oregon Institute of Technology, Rosebud Sioux
Condon, William Roger, University of Mary, Standing Rock Sioux ND and SD
Conners, Tina Jean, State University of NY/Oswego/St. Regis Band of Mohawk Indians, NY
Conter, Keri Lee, Rocky Mountain College, Crow Tribe of Montana
Cooper, April Deann, Northeastern State University, Cherokee Nation of Oklahoma
Cooper, Benjamin Dale, Northeastern State University, Cherokee Nation of Oklahoma
Cravatt, Kymberly Diona, University of Oklahoma, Seminole of Oklahoma
Credo, Katherine Morris, University of Texas Medical Branch at Galveston, Navajo Tribe of AZ, NM & UT
Crocker-Ericson, Elizabeth Marie, University of Southen California, Cherokee Nation of Oklahoma
Cromer, Kelly Jenise, Southwestern Oklahoma State University, Cheyenne—Arapaho of Oklahoma
Cruz, Kelly Janice Lynn, Albuquerque Technical Vocational Institute, Pueblo of Acoma
Cruz, Mark Deleon, University of San Francisco, Ysleta Del Sur Pueblo of TX
Culver, Jennifer Lyn, Oklahoma State University, Cherokee Nation of Oklahoma
Cummings, James Jackson, Southwestern Oklahoma State Univ., Cherokee Nation of Oklahoma
Cunningham, Roxie Kim, University of Washington, Nez Perce of Idaho
Dahlen, Jencie Kay, University of North Dakota, Turtle Mountain Band of Chippewa Indians
Damon, Dezbaa Altaalkii, Arizona State University, Navajo Tribe of AZ, NM & UT
Daniels, Letitia Renita, University of Oklahoma, Seminole of Oklahoma
Daniels, Virginia, California School of Professional Psychology, Navajo Tribe of AZ, NM & UT
Daugherty, Jamie Suzette, University of Oklahoma, Cherokee Nation of Oklahoma
Davidson, Kelly Ann, Southern Illinois University—Carbondale, Aleut, AK
Davis, Allison Kay, University of North Dakota, Crow Creek Sioux of South Dakota
Davis, Brandy Darlene, Southwestern Community College, Eastern Band of Cherokee Indians of NC
Davis, Gloria Marion, University of North Dakota, Turtle Mountain Band of Chippewa Indians
Davis, Lisa Marie, University of North Dakota, Turtle Mountain Band of Chippewa Indians
Dawes, Kari Elaine, University of Iowa, Cherokee Nation of Oklahoma
De La Rosa, Ofelia Monique, University of Oklahoma, Delaware of Oklahoma
Dean, Eric Rae, Oklahoma State University, Choctaw Nation of Oklahoma

Deardorff, Cynthia Ann, Oklahoma Baptist University, Absentee-Shawnee Tribe of Indians of Oklahoma
Dearman, Callie Elizabeth, Oklahoma Baptist University, Cherokee Nation of Oklahoma
Declay, Nadia Lupe, University of Arizona, White Mountain Apache Tribe
Decoteau, Michelle Germaine, Minot State University, Turtle Mountain Band of Chippewa Indians
Delmar, Marjorie, Northern Arizona University, Navajo Tribe of AZ, NM & UT
Delorme, Angelynn, Portland State University, Turtle Mountain Band of Chippewa Indians
Delorme, Carolyn Marie, North Dakota State University, Turtle Mountain Band of Chippewa Indians
Dement, Rachel Leah, Emory University School of Medicine, Oglala Sioux Tribe of Pine Ridge, SD
Denson, Kent Douglas, University of Oklahoma, Chickasaw Nation of Oklahoma
Deshnod, Sheilah A., University of New Mexico, Navajo Tribe of AZ, NM & UT
Detmer, Sandra Joy, Modesto Junior College, Turtle Mountain Band of Chippewa Indians
Devereaux, Toni Lynn, Salish Kootenai College, Blackfeet Tribe, MT
Dewbre, George Eddie, Southeastern Oklahoma State University, Choctaw Nation of Oklahoma
Dickerson, Daniel Lee, College of Osteopathic Medicine of the Pacific, Alaskan
Dillard, Ursula Gwynn, Harvard College/Radcliff College, Navajo Tribe of AZ, NM, & UT
Dineyazhe, Frances Lynn, University of Arizona, Navajo Tribe of AZ, NM, & UT
Dionne, Arthur James, Minot State University, Turtle Mountain Band of Chippewa Indians
Dixon, Damon Brian, University of North Dakota, Hopi Tribe
Dixon, Missena Elizabeth, Cameron University, Seminole of Oklahoma
Downing, Leigh Anne, University of Texas, Chickasaw Nation of Oklahoma
Dykstra, Kevin Duane, Ohio State University, Kiowa of Oklahoma
Eagle, Kathryn Rae, University of Arizona College of Medicine, Three Affiliated Tribes of the Fort Berthold Reservation
Edwards, Kerry Rachelle, University Oklahoma, Cherokee Nation of Oklahoma
Edwards, Polly Ann, University of Oklahoma, Caddo Indian Tribe of Oklahoma
Edwards, Ralph Casey, Carl Albert State of College, Cherokee Nation of Oklahoma
Egan, Leonora Ann, Univesity of New Mexico, Navajo Tribe of AZ, NM, & UT
Elliott, Billy Wayne, Northern Arizona University, Wyandotte of Oklahoma
Ellis, Pamela Renee, Arizona State University, Navajo Tribe of AZ, NM, & UT
Emery, Charles Richard, Duke University Med. Ctr. Phy. Asst. Prg., Cheyenne River Sioux Tribe, SD
Endischee, Sophia, University of Arizona, Navajo Tribe of AZ, NM, & UT
Engavo, Earlene Debra, Central Wyoming College, Arapaho Tribe—Wind River
Eriacho, Cerelia, University of New Mexico—Gallup, Zuni Tribe, NM
Esalio, Stacy Gwen, University of New Mexico—Albuquerque, Zuni Tribe, NM
Evan, Mona Irene, University of Alaska, Kake Organized Village
Fairbanks, Barbara Ann, Northwest Technical College, White Earth Band—MN Chippewa
Fields, Julie Marie, University of Tulsa, Crow Tribe of Montana
Filteau, Sarah Louise, Bellin College of Nursing, Bad River Band of Chippewa, WI
Fingerlin, Nancy Ellen, University of Oklahoma—Norman, Chickasaw Nation of Oklahoma
Fleming, Stephani Rose, University of Wyoming, Turtle Mountain Band of Chippewa Indians
Foldoe, Debra Ann, University of Texas—Arlington, Minnesota Chippewa Tribe (6 component Reservations)
Folger, Gloria, Weber State College, Najavo Tribe of AZ, NM, & UT
Foster, Shawna Leann, Northeastern State University, Cherokee Nation of Oklahoma
Fred, Alana Renee, University of Arizona, Navajo Tribe of AZ, NM, & UT
Freeman, Michael Scott, University of Health Sciences College Osteo Med, Cherokee Nation of Oklahoma
Freeman, Ryan Matthew, University of Oklahoma, Muskogee (Creek) Nation of Oklahoma
Frigerio, Sonya Renee, University of New Mexico, Choctaw Nation of Oklahoma
Fryrear, Carrie Marie, Southwestern Oklahoma State University, Chickasaw Nation of Oklahoma
Gaddy, Jasmine Reanna, Temple University, Navajo Tribe of AZ, NM, & UT
Gamble, Wanda, Northern Arizona University, Navajo Tribe of AZ, NM, & UT
Gardipee, Walter Thomas, University of Montana, Little Shell Tribe of Chippewa/Montana
Garness, Mary, Northland College, Bad River Band of the Lake Superior Tribe of Chippewa
Gashytewa, Carrie Lynette, University of New Mexico—Albuquerque, Zuni Tribe, NM
Gillis, Christopher Jon, Minot State University, Turtle Mountain Band of Chippewa Indians
Gladstone, Joseph Scott, University of Arizona, Blackfeet Tribe, MT
Gloshay, Jr., Eddie, University of Arizona, White Mountain Apache
Glover, Justin Mathew, Oklahoma State University, Choctaw Nation of Oklahoma
Goggles, Sunny Rae, University fo North Dakota, Arapahoe Tribe of the Wind River Reservation
Goodman, Gayla Beth, University of Maryland, Kickapoo of Oklahoma
Gordon, Jennifer Lynn, California Stae University, Red Cliff Band of Lake Superior Chippewa
Gordon, Melissa Marion, Montana State University, Crow Tribe of MT
Gorman, Marianita Elizabeth, University of New Mexico, Navajo Tribe of AZ, NM, & UT
Gourneau, Dean Anthony, University of North Dakota, Turtle Mountain Band of Chippewa Indians
Graham, Sara Wanbli, South Dakota State University, Oglala Sioux Tribe of Pine Ridge, SD
Grant, Elizabeth Lee, St Vincent Hospital & Health Center, Blackfeet Tribe, MT
Grant, Vanissa Ann, University of Montana, Blackfeet Tribe MT
Grass, Regina, Oklahoma University, Cherokee Nation of Oklahoma
Gray, Elfreida Ann, Northern Arizona University, Navajo Tribe of AZ, NM, & UT
Gray, Jason Charles, University of Oklahoma Center, Choctaw Nation of Oklahoma
Gray, Jennifer Anne, Langston University, Osage of Oklahoma
Gray, Thomas Kevin, University of North Dakota, Confederated Salish & Kootenai Tribes
Green, Sarah Carrol, University of Oklahoma, Choctaw Nation of Oklahoma
Gregoire, Wenona Evonne, SUNY at Buffalo, Seneca Nation of New York
Grey, Michael, University of New Mexico—Albuquerque, Navajo Tribe of AZ, NM, & UT
Guinn, Heather Elaine, Tulsa Junior College, Muskogee (Creek) Nation of Oklahoma

Gust, Kateri Lyn, Montana State University—Billings, Crow Tribe of Montana
Guy, Martina Rae, University of Arizona, Navajo Tribe of AZ, NM, & UT
Guyton, Georgia Ann, Rose State College, Muskogee (Creek) Nation of Oklahoma
Hacker, John David, Hampton Institute, Rosebud Sioux
Hager, Arlette D., Presentation College, Cheyenne River Sioux Tribe
Hagerty, Kori Lynn, University of New Mexico, Blackfeet Tribe, MT
Hall, Kent Hartland, University of Central Oklahoma, Citizen Band Potawatomi of Oklahoma
Hall, Raquel Ellen, University of California Davis, Coastal Bank of the Chumash Nation
Hanning, Laura Lynn, University of Montana, Blackfeet Tribe, MT
Harhut, Michael Anthony, University of Michigan, Nome Eskimo Community
Harjo, Jim B., Oklahoma State University, Muskogee (Creek) Nation of Oklahoma
Harjo, Rebecca Ruth, University of Southern California, Muskogee (Creek) Nation of Oklahoma
Harnage, Julie Ann, University of Central Oklahoma, Cherokee Nation of Oklahoma
Harris, Leslie Jo, University of North Dakota, Turtle Mountain Band of Chippewa Indians
Harrison, Geniel, University of Utah, Confederated Tribes of the Goshute
Harrison, Pierce Ray, Arizona State University, Confederated Tribes and Bands of the Yakama Indian Nation
Harrison, Sonya, University of New Mexico, Navajo Tribe of AZ, NM, & UT
Harrison, Stacy D., University of New Mexico, Navajo Tribe of AZ, NM, & UT
Hassen, Kathleen Lois, Western Michigan University, Sault St. Marie Tribe—Chippewa
Hately, Mari Carlin, University of Washington School of Medicine, Alaska
Haugen, Julie Estelle, Bastyr University, Cherokee Nation of Oklahoma
Haukass, Nicole Marie, Creighton University, Rosebud Sioux
Hawkins, Amy Delah, St. Gregory's University, Muskogee (Creek) Nation of Oklahoma
Hawkins Leonard, Anna Mildred, University of Alaska—Anchorage, Alaskan
Hayes-Coons, Jennifer Lynn, Bacone College, Cherokee Nation of Oklahoma
Helm, Melissa Laquetia, Carl Albert State College, Choctaw Nation of Oklahoma
Hemann, Ryan David, Illinois State University, Assiniboine & Sioux
Henry, Abraham John, Augsburg College, Turtle Mountain Band of Chippewa Indians
Henry, Douglas Edward, Howard University, Navajo Tribe of AZ, NM, & UT
Henson, Mike Allen, University of Central Oklahoma, Comanche Indian Tribe of Oklahoma
Henson-Samuels, Andrea Jean, Bacone College, Cherokee Nation of Oklahoma
Hernandez, Pamela, University of Southern California, Navajo Tribe of AZ, NM, & UT
Hernandez, Ronald Joseph, Salish Kootenai College, Confederated Salish & Kootenai Tribes
Herne, Erika Lynn, State University of New York at Buffalo, St. Regis Band of Mohawk Indians
Hewlett, lori, University of Colorado at Denver, Navajo Tribe of AZ, NM, & UT
Hill, Paula Lynn, Western Michigan University, Sault Ste. Marie Tribe Chippewa
Hogue, Michael Andrew, George Washington University, Choctaw Nation of Oklahoma
Holman, Jason Grant, University of Oklahoma—Norman, Chickasaw Nation, Oklahoma
Holmes, Michael Sterling, East Central University, Cheyenne-Arapaho of Oklahoma
Honaberger, David Anthony, University of Puget Sound, Pueblo of San Juan
Horse, Lerena Dawn, University of Utah, Confederated Tribes of the Goshute
House-Howard, Irene A., University of New Mexico, Navajo Tribe of AZ, NM, & UT
Houston, Lindsay Nicole, Northeastern State University, Cherokee Nation of Oklahoma
Howeya, Lori Ann, University of New Mexico, Pueblo of Acoma
Howling Wolf, William L., University of North Dakota, Three Affiliated Tribes of the Fort Berthold Reservation
Hudson, Jacqueline Coleen, University of Oklahoma, Turtle Mountain Band of Chippewa Indians
Hugues, Ross Neil, University of Iowa, Shoshone-Bannock Fort Hall
Huie, Rhonda Ruth, University of Oklahoma, Muskogee (Creek) Nation of Oklahoma
Hull, Debra Maney, Western Carolina University, Eastern Band of Cherokee of North Carolina
Hulse, Hailey Vonn, Truman State University, Osage of Oklahoma
Huson, Betty Ann, California State University—Sacramento, Cherokee Nation of Oklahoma
Hyden, Andreana Dee, Coconino County Community College, Navajo Tribe of AZ, NM, & UT
Inge, Rudi Heath, University of Oklahoma, Choctaw Nation of Oklahoma
Ingram, Dena Gail, University of Oklahoma Health Sciences Center, Chickasaw Nation, Oklahoma
Interpreter, Christina Lynn, Northern Arizona University, Hopi Tribe, AZ
Irene, Linda Patrice, University of Oklahoma, Muskogee (Creek) Nation of Oklahoma
Ironmaker, Cheryl Diane, Montana State University—Northern, Assiniboine & Sioux Tribes
Ivanoff, Nora R., University of Washington, Alaskan
Jacobs, Vivian Francis, Cornell University, Cherokee Nation of Oklahoma
James, Gertrude Ann, New Mexico Highlands University, Navajo Tribe of AZ, NM, & UT
Janis, Amber Nicole, South Dakota University, Oglala Sioux Tribe of Pine Ridge, SD
Jefferson, Charlotte Kay, University of Montana School of Pharmacy, Crow Tribe of MT
Jensen, Michelle, University of Arizona, Navajo Tribe of AZ, NM, & UT
Jensen, Vanessa, University of Arizona, Navajo Tribe of AZ, NM, & UT
Jesse, Michelie, East Central Oklahoma State University, Citizen Band Potawatomi of Oklahoma
Jim, Melissa Ann, University of New Mexico, Navajo Tribe of AZ, NM, & UT
Johnson, Anne M., University of Alaska, Golovin Village (Chinik Eskimo), AK
Johnson, Beverly Mae, University of Washington, Emmonak Village
Johnson, Damon Douglas, University of Alaska, Confederated Salish & Kootenai Tribes
Johnson, Jennifer Michelle, Oregon State University, Tlingit & Haida, Central Council
Johnson, Kevin Lee, PIMA Medical Institute—Albuquerque, Navajo Tribe of AZ, NM, & UT
Johnson, Meredith Leigh, Oklahoma State University, Chickasaw Nation of Oklahoma
Johnson, Norman Chris, Utah State University, Sisseton-Wahpeton Sioux Tribe
Johnson, Roxanne Marie, University of North Dakota, Turtle Mountain Band of Chippewa Indians
Johnson, Stephanie Jean, Medcenter One, Pyramid Lake Paiute Tribe
Johnson, Tara Lee, Dine College, Navajo Tribe of AZ, NM, & UT
Johnson, Veronica Renee, University of New Mexico, Navajo Tribe of AZ, NM, & UT

Johnson, Vivian, California State University, Navajo Tribe of AZ, NM, & UT
Joice, Kelly A., University of Kansas—Lawrence, Cherokee Nation of Oklahoma
Joines, John Clifford, University of Oklahoma Health Sciences Center, Choctaw Nation of Oklahoma
Jones, Bernadine Rose, Northern Arizona University, Navajo Tribe of AZ, NM, & UT
Jones, Lillian, University of Phoenix, Navajo Tribe of AZ, NM, & UT
Jones-Pingleton, Ronda Kay, East Central Oklahoma State, Choctaw Nation of Oklahoma
Jordan, Michael James, Washington State University, Confederated Tribes of the Colville Reservation
Jumbo, Janice, Northern Arizona University, Navajo Tribes of AZ, NM, & UT
Juvinel-Henry, Lorna Tuanda, University of Washington, Confederated Tribes and Bands of the Yakama Indian Nation
Kady, Christiane Renee, University of Utah, Navajo Tribe of AZ, NM, & UT
Kanawite, Freida Mae, Albuquerque Tech-Voc Institute, Navajo Tribe of AZ, NM, & UT
Kanuho, Verdell, Northern Arizona University, Navajo Tribe of AZ, NM, & UT
Kaulaity, Joseph Jarrell, University of Arizona, Navajo Tribe of AZ, NM, & UT
Keen, Octa Emerald, Creighton University, Omaha of Nebraska
Keene, Kristi Michelle, Southwestern State College, Cherokee Nation of Oklahoma
Kelley, Harlan Hunt, Southern Illinois University, Cherokee Nation of Oklahoma
Kelley, Valerie, Northland Pioneer College, Navajo Tribe of AZ, NM, & UT
King, Carla Jean, Northern Montana College, Fort Belknap
King, Gloria, University of New Mexico, Navajo Tribe of AZ, NM, & UT
Kinlecheenie, Orlinda Lou, Northland Pioneer College, Navajo Tribe of AZ, NM, & UT
Kirk, John Vincent, Oklahoma State University, Cherokee Nation of Oklahoma
Kitto, Larrie Dale, Strayer University, Choctaw Nation of Oklahoma
Kjellsen, Patricia Lee, University of Alaska—Anchorage, Aleut
Klah, Josephine, Northern Arizona University, Navajo Tribe of AZ, NM, & UT
Kodaseet, Patricia, University of Oklahoma—Norman, Cheyenne-Arapaho of Oklahoma
Krulish, Arlene Mary, University of North Dakota, Devils Lake Sioux
Krulish, Arliss Marie, University of North Dakota, Devils Lake Sioux
Lamebull, Melissa Marie, University of Hawaii at Manoa, Cheyenne-Arapaho Tribes of Oklahoma
Lameman, Joann, University of Arizona, Navajo Tribe of AZ, NM, & UT
Lamere, Jennifer Jo, University of Central Oklahoma, Winnebago Tribe of Nebraska
Lampert, Rebeca Lynn, PIMA County Community College, Navajo Tribe of AZ, NM, & UT
Lane, Brandie Lyn, Montana State University, Blackfeet Tribe, MT
Lansing, Letitia, University of New Mexico—Albquerque, Navajo Tribe of AZ, NM, & UT
Largo, Revina, Brigham Young University, Navajo Tribe of AZ, NM, & UT
Lascano, Terrance Allen, University of Oklahoma, Comanche of Oklahoma
Lasch, Wilma Rae, University of Great Falls, Blackfeet Tribe, MT
Latocha, Demetrius H., University of Iowa, Standing Rock Sioux of N & S Dakota
Lauesen, Luann Rae, University of Alaska, Gulkana Village
Laughter, Richard Kim, University of Utah, Navajo Tribe of AZ, NM, & UT
Laurence-Leslie, Faith Hope, Arizona State University, Navajo Tribe of AZ, NM & UT
Lavender, Dorcas Mary, University of New Mexico—Albuquerque, White Mountain Apache Tribe
Lawhorn, William Andrew, University of Oklahoma, Cherokee Nation of Oklahoma
Lawrence, Tammy, University of North Dakota, Devils Lake Sioux
Lebeau, Michael E., University of North Dakota, Cheyenne River Sioux Tribe
Leemhuis, Stephanie Brook, University of Oklahoma, Cherokee Nation of Oklahoma
Lehner, Joann Naomi, Ogalala Lakota College, Oglala Sioux Tribes of Pine Ridge, SD
Lewis, Rusty Oswald, Bismarck State College, Devils Lake Sioux
Little, Kendall Jay, University of Oklahoma, Muskogee (Creek) Nation of Oklahoma
Littleghost, Sheila May, Sisseton Wahpeton Community College, Devil's Lake Sioux Tribe, ND
Lofgren, Paul Arthur, Johns Hopkins University, Cherokee Nation of Oklahoma
Long, Lorenda T., University of New Mexico—Albuquerque, Navajo Tribe of AZ, NM, & UT
Long-Likeric, Kendra Beth, University of Washington, Muskogee (Creek) Nation of Oklahoma
Lopez-Martin, Tanya Elizabeth, New Mexico Highlands University, Pueblo of Pojoaque, NM
Lorentine, Darra, University of Arizona, Tohono O'odham Nation of Arizona
Louise, Linda, Portland Community College, Mooretown Rancheria of Maidu
Lowrance, Jody Lynn, University of Oklahoma, Chickasaw Nation of Oklahoma
Lowry, Jessica, College of Charleston, Lumbee
Luebke, Jeneile Marie, University of Wisconsin Madison, Bad River Band of the Lake Superior Tribe of Chippewa
Lufkins, Delvin Kenneth, North Dakota State University, Sisseton-Wahpeton Sioux Tribe
Lundgren, Roberta Toneena, University of Washington, Tulalip Tribes of the Tulalip Reservation
Lutes, Crystal Dawn, University of Oklahoma Health Services Center, Navajo Tribe of AZ, NM, & UT
Luther, Deborah K., Northern Arizona University, Navajo Tribe of AZ, NM, & UT
Mahooty, Stephanie Juliet, Arizona State University, Zuni Tribe, NM
Manuelito, Darlene, University of New Mexico, Navajo Tribe of AZ, NM, & UT
Mariano, Karoline Shirley, Northern Arizona University, Navajo Tribe of AZ, NM, & UT
Martell-Rondeau, Christi Sue, North Dakota State University, Turtle Mountain Band of Chippewa Indians
Martine, Cynthia Ann, University of North Dakota, Jicarilla Apache Tribe
Martinez, Antoinette Patricia, University of North Dakota, Santa Ynez Band of Chumash
Martinez, Marie Jeannette, University of New Mexico, Navajo Tribe of AZ, NM, & UT
Masayesva, Brett G., University of Arizona, Hopi Tribe, AZ
Mason, Cheryl Lynn, University of New Mexico, Navajo Tribe of AZ, NM, & UT
Mason, Laquita Joy, Montana State University, Three Affiliated Tribes of the Fort Berthold Reservation
Mathis, Trina C, University of New Mexico, Navajo Tribe of AZ, NM, & UT
Mathison, Justin Lee, Umpqua Community College, Cow Creek Band of Umpqua
Matthews, Joshua Frame, University of Oklahoma, Eastern Band of Cherokee of NC
Maxon, Jeff Allen, North Dakota State University, Cheyenne River Sioux
McCarthy, Vincent Paul, University of Arizona, Comanche of Oklahoma

McCuistion, Robin Edward, Western Washington University, Aleut
McGilbary, Kristie Rae, Seminole State College, Kiowa of Oklahoma
McGinn, Michelle Lee, New Mexico Highlands University, Pueblo of Acuma
Merchant, Nicole Dawn, Montana State University, Crow Tribe of Montana
Miera, Melissa Renee, University of Kansas, Winnebago Tribe
Miles, Lori Louise, University of New Mexico, Navajo Tribe of AZ, NM, & UT
Miles, Mary Kristen, Northern Oklahoma College, Osage of Oklahoma
Miljur-Bryson, Pamela Michelle, University of Anchorage, Tlingit & Haida, Central Council
Miller, Marijai, University of Alaska, Alaskan
Monette, Eugene Louis, Turtle Mountain Band of Chippewa Indians
Montoya, Danny Dave, University of New Mexico—Gallup, Navajo Tribe of AZ, NM, & UT
Montoya, Marietta, University of New Mexico, Pueblo of Santa Anna
Moore, Kathleen White, Trevecca Nazarene University, Cherokee Nation of Oklahoma
Moore, Mary Kathleen, Oklahoma State University, Cherokee Nation of Oklahoma
Moran, Kristina Mae, Seattle Central Community College, Delaware Tribe of Western Oklahoma
Morgan, Vincent Dominic, Arizona State University, Navajo Tribe of AZ, NM, & UT
Morris, Charla Jean, University of North Dakota, Cherokee Nation of Oklahoma
Morris, Elizabeth Lynette, University of Oklahoma, Muskogee (Creek) Nation of Oklahoma
Morrison-Crossland, Eugena Shalyn, Columbia Union College, Cherokee Nation of Oklahoma
Mose, Paula Marie, University of New Mexico, Navajo Tribe of AZ, NM, & UT
Mose, Tallethea Ruth, University of New Mexico, Navajo Tribe of AZ, NM, & UT
Munoz, Corey Steven, Oklahoma State University—Stillwater, Cherokee Nation of Oklahoma
Murray, Timothy M., University of Oklahoma Health Sciences Center, Choctaw Nation of Oklahoma
Mushrush, Stephanie Ann, Riverside Community College, Washoe Tribe of Nevada & California
Naasz, Katrina Hillary, University of Colorado, Navajo Tribe of AZ, NM, & UT
Nahno-Kerchee, Walter Jay, University of Oklahoma, Comanche of Oklahoma
Napelee, Shannon Kaye, Arizona State University, Gila River Indian Community
Nason, Alvin James, University of North Dakota, Leech Lake—Minnesota Chippewa
Nauhauser, Diane M., Kean University, Cheyenne River Sioux
Nelson, Shannon, University of New Mexico—Albuquerque, Navajo Tribe of AZ, NM, & UT
Nelson, Tina Ann, Fort Lewis College, Navajo Tribe of AZ, NM, & UT
Nelwood, Carolyn Dee, University of New Mexico—Gallup, Navajo Tribe of AZ, NM, & UT
Nephew, Lesley Ellen, Erie Community College, Seneca Nation of New York
Nez, Sonya, Arizona State University, Navajo Tribe of AZ, NM, & UT
Nez, Treva Freda, PIMA Medical Institute—Mesa, Navajo Tribe of AZ, NM, & UT
Nez, Victoria, Northern Arizona University, Navajo Tribe of AZ, NM, & UT
Nidiffer, Amber Lynn, University of Oklahoma—Norman, Cherokee Nation of Oklahoma
Noisy Hawk, Lynelle Nancy, University of South Dakota, Oglala Sioux Tribe of the Pine Ridge Reservation, SD
Nunn, Diana Lynn, Oklahoma City Community College, Muskogee (Creek) of Oklahoma
Old Horn-Vondall, Carol R., University of Montana, Crow Tribe of MT
Olney, Elizabeth Marie, University of Washington School of Medicine, Chippewa Cree
Ortiz, Lisa Dianne, Wayne State University, Cherokee Nation of Oklahoma
Ortiz, Viola Maria, New Mexico State University, Pueblo of Acoma
Owaleon, Mona Lynette, University of New Mexico, Albuquerque, Zuni Tribe, NM
Owen, Mary June, University of Minnesota, Alaskan
Pablo, Evangeline, Northern Arizona University, Navajo Tribe of AZ, NM, & UT
Pack, Bruce Anthony, Northeast Louisiana School of Pharmacy, Cherokee Nation of Oklahoma
Palacol, Christie Kahikuonalani, University of Oklahoma—Norman, Comanche of Oklahoma
Palm, Toby James, Pacific University College, Cherokee Nation of Oklahoma
Paniagua, Calvin F., Central Michigan University, Little Traverse Bay Bands of Odawa, MI
Panteah, Valda Marie, Albuquerque Technical Vocational Institute, Zuni Tribe, NM
Pappan, Cynthia Rae, Creighton University, Turtle Mountain Band of Chippewa Indians
Paquette, Jessica Maureen, Michigan State University, Sault Ste. Marie Band of Chippewa Indians
Parisien Anjanette Marie, University of North Dakota, Turtle Mountain Band of Chippewa Indians
Parisien, Audrey Lee, Minot State University, Turtle Mountain Band of Chippewa Indians
Parisien, Shanon Ronnette, University of North Dakota, Turtle Mountain Band of Chippewa Indians
Parker, Adrienne, Mesa Community College, Navajo Tribe of AZ, NM, & UT
Paschall, Christopher Matthew, University of North Dakota, Chickasaw Nation of Oklahoma
Patnaude, Lawrence Andrew, North Dakota University, Turtle Mountain Band of Chippewa Indians
Patten, Tracie Lynn, University of Oklahoma Health Sciences Center, Comanche Indian Tribe of Oklahoma
Paul, Jamie Lee, Arizona State University, Navajo Tribe of AZ, NM, & UT
Payne, Jewel Ruby, Montana State University, Assiniboine & Sioux of Ft. Peck, MT
Peltier, Crystal Gayle, University of North Dakota, Turtle Mountain Band of Chippewa Indians
Pete, Dornell, Fort Lewis College, Navajo of AZ, NM, & UT
Peter, Myrna Elfreida, University of Washington, Native Village Fort Yukon
Peterman, Roxanne, University of Arizona, Navajo Tribe of AZ, NM, & UT
Pewenofkit, Rowena Jolene, University of Central Oklahoma, Kiowa of Oklahoma
Phelps-Parker, Nancy Elizabeth, University of Oklahoma Health Science Center, Cherokee Nation of Oklahoma
Phillips, Kristie Ann, University of Oklahoma Health Science Center, Citizen Band Potawatomi of Oklahoma
Pino, Michelle Lynette, University of New Mexico, Navajo Tribe of AZ, NM, & UT
Pittman, Larry Hale, Ohio College of Pediatric Medicine, Choctaw Nation of Oklahoma
Poolaw, Audrey Winnie, Southwestern Oklahoma State University, Comanche of Oklahoma
Poolaw, John Thomas, University of Oklahoma, Delaware Tribe of Western Oklahoma
Potts, Crystal, Northeastern State University, Choctaw Nation of Oklahoma

Potts, Richard Ray, University of Michigan, Chickasaw Nation of Oklahoma
Pretends Eagle, Katherine Nora, University of North Dakota, Sisseton-Wahpeton Sioux Tribe
Priest, Monica Eve, D'Youville College, Seneca Nation of New York
Purdum, Stephannie Lynn, University of Houston, Choctaw Nation of Oklahoma
Quam, Zellisha Alexis, University of New Mexico—Albuquerque, Zuni Tribe
Quoshena, Tanya Cojomana, University of New Mexico, Hopi Tribe
Radney, Ruth W., University of California—Bakersfield, Comanche Indian Tribe of Oklahoma
Ranco, Mark Robert, University of Maine, Penobscot Tribe of Maine
Real Bird, Lucy Lee, University of Oklahoma, Crow Tribe of Montana
Reano, Iris Jane, University of New Mexico—Albuquerque, Pueblo of Santo Domingo, NM
Red Elk, Lindsey Beth, Gateway Community College, Assiniboine & Sioux Tribes of Ft. Peck Indian Reservation, MT
Redfox-Freeman, Elizabeth Ann, Idaho State University, Shoshone-Brannock-Ft. Hall
Redstar, Winters Benson, Rocky Mountain College, Crow Tribe of Montana
Redsteer, Sheila Janet, University of Arizona, Navajo Tribe of AZ, NM & UT
Reyhner, Deborah Dawn, University of Colorado, Comanche Tribe of Oklahoma
Ricciardi, Catherine Joy, Salish Kootenai College, Fort Belknap, MT
Riggs, Randall Wayne, University of New Mexico—Gallup, Cherokee Nation of Oklahoma
Ritzhaupt, Amber, Northeastern State University, Eastern Band—Cherokee of North Carolina
Roberts, Montgomery Lee, Oklahoma State University, Cherokee Nation of Oklahoma
Robinson, Charlene, University of Arizona, Navajo Tribe of AZ, NM, & UT
Robison, Kristie Marie, Southwestern Oklahoma State University, Apache Tribe of Oklahoma
Roche, Patricia Ann, California State University—Sacramento, Oglala Sioux Tribe of the Pine Ridge Reservation, SD
Rogers, Brandon Scott, Northeastern State University, Cherokee Nation of Oklahoma
Rogers, Geraldene Kathy, Weber State University, Navajo Tribe of AZ, NM, & UT
Rolland, Geoffrey Grant, Oklahoma State University, Muskogee (Creek) Nation of Oklahoma
Rouse, Brant Philip, University of Oklahoma, Cherokee Nation of Oklahoma
Rousseau, Jonni Ann, Presentation College, Three Affiliated Tribes of the Fort Berthold Reservation
Rucker, Jennifer Ann, University of Oklahoma, Cherokee Nation of Oklahoma
Ruleford, Maranda Louisa, University of Tulsa, Cherokee Nation of Oklahoma
Rush, Chance Lee, Oklahoma Baptist University, Three Affiliated Tribes of the Ft. Berthold Reservation
Russell, Jennie Lou, New Mexico Highland University, Navajo Tribe of AZ, NM, & UT
Russell, Kim, Northern Arizona University, Navajo Tribe of AZ, NM, & UT
Ryan, Amy Jo, University of Montana, Cherokee Nation of Oklahoma
Sage, Della June, Sisseton Wahpeton Community College, Arapahoe Tribe of the Wind River
Sahmaunt, Rebecca Jo, East Central Oklahoma State University, Kiowa Indian Tribe of Oklahoma
Sam, Kimberly Gayle, University of Central Oklahoma, Kiowa Tribe of Oklahoma
Sanchez, Janet Catherine, New Mexico Highland University, White Mountain Apache
Sandoval, Wynema Marie, New Mexico State University, Navajo Tribe of AZ, NM, & UT
Saulque, Juliann, Washington State University, Confedrated Tribes Colville
Scalpcane, Annette Andrea, Rocky Mountain College, Crow Tribe of Montana
Scalpane-Moore, Lavonne Jean, Salish Kootenai College, Northern Cheyenne
Scheinesson, Sheila, University of Southern California, Navajo Tribe of AZ, NM, & UT
Schroeder, Dawn Marie, University of North Dakota, Turtle Mountain Band of Chippewa Indians
Scott, Bobbie Joe, Rogers State Universty, Cherokee Nation of Oklahoma
Scott, Brian Edward, University of Tulsa, Cherokee Nation of Oklahoma
Seaboy, Shirley Jean, Sisseton Wahpeton Community College, Crow Tribe of Montana
Sealey, Sandra Lynnette, Cameron University, Chickasaw Nation of Oklahoma
Seibel, Gennea Adelle, University of North Dakota, Three Affiliated Tribes of the Fort Berthold Reservation
Seubert, Andra Ruth, Washington State University, Nez Perce of Idaho
Shane, Allison Doreen, South Dakota State University, Alaskan
Shangreau, Rhiannon Brook, Oglala Sioux Community College, Oglala Sioux Tribe of the Pine Ridge Reservation, SD
Sharp, Joan, Salish Kootenai College, Confederated Salish & Kootenai Tribes
Shepard, Cristopher Allen Joseph, Pomona College, Alaskan/Not Specified
Shields, Deborah Anne, East Central OK State University, Prairie Band Potawatomi of Kansas
Shipley, Wade Paul, Rocky Mountain College, Turtle Mountain Band of Chippewa Indians
Shirley, Lenora Jean, University of New Mexico—Albuquerque, Navajo Tribe of AZ, NM, & UT
Shirley, Stella Louise, University of New Mexico—Gallup, Navajo Tribe of AZ, NM, & UT
Show, Michelle Rae, Montana State University, Fort Belknap Indian Community
Sinclair, Edward Jared Mathew, University of Montana, Blackfeet Tribe, MT
Sirmans, Jayna Deneice, Oklahoma State University, Choctaw Nation of Oklahoma
Skan, Eric Christopher, Washington State University, Ketchikan Indian Corp
Skin, Betty Erma, Wayland Baptist University, Selawik Native Village
Slim, Geraldine Ann, Phoenix College, Navajo Tribe of AZ, NM, & UT
Sloan, Adreanne, New Mexico Highlands University, Navajo Tribe of AZ, NM, & UT
Sloan, Rick Michael Wesley, University of Colorado, Cherokee Nation of Oklahoma
Smith, Barbara Ann, University of New Mexico—Albuquerque, Navajo Tribe of AZ, NM, & UT
Smith, Crystal Lee, University of Oklahoma, Mississippi Band of Choctaw
Smith, Derek Haskeltsie, Brigham Young University, Navajo Tribe of AZ, NM, & UT
Smith, Elaine Show, Montana State University, Blackfeet Tribe, MT
Smith, Linda Ann, Minot State College, Turtle Mountain Band of Chippewa Indians
Smith, Seneca Martin, Southwestern Oklahoma State University, Muskogee (Creek) Nation of Oklahoma
Smith, Sheila Rena, University of Oklahoma Health Sciences Center, Seminole of Oklahoma
Smith, Tiffany Beth, East Central Oklahoma State University, Cherokee Nation of Oklahoma

Snell, Jerry David, University of Oklahoma Dental School, Cherokee Nation of Oklahoma
Spotted Horse, Patricia Jean, American University, Standing Rock Sioux Tribe of N. & S. Dakota
Spurlock, Cory Stephen, University of Oklahoma, Citizen Band Potawatomi of OK
St. Clair, Billie Jo, North Dakota State University, Turtle Mountain Band of Chippewa Indians
St. John, Valdon John, University of Mary, Cheyenne River Sioux
Starbard, Karla Rachelle, University of Nevada, Craig Community College
Starks, Rachel Rose, Wheaton College, Zuni Tribe
Starr, Suzanne, Salish-Kootenai Community College, Northern Cheyenne
Stefaniak, Yvonne Chester, University of New Mexico—Gallup, Navajo Tribe of AZ, NM, & UT
Stevens, Andrew Levi, University of North Dakota, Cheyenne-Arapaho of Oklahoma
Stewart, Daryl Lee, University of New Mexico—Gallup, Navajo Tribe of AZ, NM, & UT
Stover, Patrick Pete, University of Oklahoma Dental School, Chickasaw Nation of Oklahoma
Strobbe, Vonne Kay, University of New Mexico—Albuquerque, Assiniboine & Sioux of Fort Peck, MT
Stuck, Andrew Timothy Lewis, University of Arizona, Navajo Tribe of AZ, NM, & UT
Stump-King, Glynna Marie, University of New Mexico—Gallup, Chippewa Cree Indians of RockyBoy, MT
Summerlin, Allen William, University of the Pacific, Cherokee Nation of Oklahoma
Sutton, Stephanie, University of Washington, Blackfeet Tribe, MT
Swan, Rhonda, University of Great Falls, Chickasaw Nation of Oklahoma
Swensen, Eric Carl, University of North Dakota, Aleut
Swift, Jennifer Renae, University of Arizona, San Carlos Apache Tribe
Taylor, Jody Belinda, University of North Dakota, Cherokee Nation of Oklahoma
Teasyatwho, Arlene Jean, University of New Mexico, Navajo Tribe of AZ, NM, & UT
Teller, Pamela, Dine College, Narraganset Indian Tribe of Rhode Island
Teller, Tanya Corina, University of New Mexico—Albuquerque, Navajo Tribe of AZ, NM, & UT
Tenequer, Valerie Leigh, Gateway Community College, Navajo Tribe of AZ, NM, & UT
Terrell, Mendy Renee, University of Oklahoma-Norman, Cherokee Nation of Oklahoma
Tescier, Echo, University of California—Berkeley, Citizen Band Potawatomi of Oklahoma
Thomas, Sheila, University of New Dakota, Turtle Mountain Band of Chippewa
Thomas, Veronica Rose, Mounty Marty College, Santee Sioux of Nebraska
Thomason, Felecia, University of New Mexico—Albuquerque, Navajo Tribe of AZ, NM, & UT
Thompson-Lookingback, Bret, University of Minnesota, White Earth Band-Minnesota Chippewa
Thrasher, Amy Renee, Northeastern State University, Choctaw Nation of Oklahoma
Todichenney, Linda Lee, Northland Pioneer College, Navajo Tribe of AZ, NM, & UT
Todicheeney, Rydell, Arizona State University, Navajo Tribe of AZ, NM, & UT
Tolino, Gerilyn Ardith, New Mexico Highlands University, Navajo Tribe of AZ, NM, & UT
Tom, Jolene, Northern Arizona University, Navajo Tribe of AZ, NM, & UT
Tommie, Titania Leonila, Arizona State University, Navajo Tribe of AZ, NM, & UT
Torres, Tina Marie, Heritage College, Turtle Mountain Band of Chippewa Indians
Toya, Antoinette Elisia, Forth Lewis College, Pueblo of Jemez, NM
Toya, Tirzah Marie, Albuquerque Technical Vocational Institute, Pueblo of Laguna, NM
Tracy, Caroline, Northern Arizona University, Navajo Tribe of AZ, NM, & UT
Tsethlikai, Cynthia, University of New Mexico, Zuni Tribe, NM
Tsethlikai, Nina Marie, University of New Mexico—Gallup, Zuni Tribe, NM
Tsingine, Georgia Lynn, University of Arizona, Navajo Tribe of AZ, NM, & UT
Tsosie, Orlando, Utah State University, Navajo Tribe of AZ, NM, & UT
Tsosie, Veronica Tonya, Northern Arizona University, Navajo Tribe of AZ, NM, & UT
Tunnell, Kimberly Rennee, Oklahoma State University, Kiowa of Oklahoma
Turner, Rayna June, Northern Oklahoma College, Apache Tribe of Oklahoma
Turney, Jarett Brandon, Northeastern State University, Cherokee Nation of Oklahoma
Tyner, Vera Alene, University of Oklahoma, Muskogee (Creek) Nation of Oklahoma
Underwood, April Dawn, Oklahoma State University, Cherokee Nation of Oklahoma
Upshaw, Juliana, Northern Arizona University, Navajo Tribe of AZ, NM, & UT
Uttchin, Venus, University of Oklahoma, Muskogre (Creek) Nation of Oklahoma
Van Meter, Catherine Leigh, University of Alabama, Poarch Band of Creek Indians of Alabama
Vandusen, Terra Andrea, Seminole State College, Cherokee Nation of Oklahoma
Vardeman, Barry Keith, University of Oklahoma—Norman, Cherokee Nation of Oklahoma
Vielle, Nadine Marie, Salish Kootenai Community College, Blackfeet Tribe, MT
Volden, Minisa Michelle, California School of Psychology, Cherokee Nation of Oklahoma
Vollin, Marcia Fay, University of Montana, Confederated Salish & Kootenai Tribe
Wahkinney, Margie Maxine, Cameron University, Comanche of Oklahoma
Walkingstick, Chanel Ryan, Northeastern State University, Cherokee Nation of Oklahoma
Wallace, Kacey Leann, University of Central Oklahoma, Choctaw Nation of Oklahoma
Walls, Andrew James, University of Oklahoma Dental School, Choctaw Nation of Oklahoma
Waquie, Monica Janet, Albuquerque Technical Vocational Institute, Pueblo of Jemez
Ward, Sandi Rae, Peninsula College, Makah Indian Tribe of Washington
Ware, Brenda Lee, Valley View Hospital, Cherokee Nation of Oklahoma
Watford, Velma Jean, Pima Community College, Navajo Tribe of AZ, NM, & UT
Weber, Shana Renae, Michigan State University, Oneida of Wisconsin
Webster, Edwin Quillin, University of Montana, Aleut, AK
Welch, Marvel Andrea, Western Carolina University, Eastern Band-Cherokee of North Carolina
Wells, Elmer Bruce, North Dakota State University, Three Affiliated Tribes of the Ft Berthold Reservation
Wells, Shane, Southern Adventist University, Tlingit & Haida, Central Council
Werito, Jennifer, University of New Mexico—Albuquerque, Navajo Tribe of AZ, NM, & UT
West, Michael Clinton, Oklahoma State University, Choctaw Nation of Oklahoma
Westman, Delana Denise, University of Oklahoma, Cherokee Nation of Oklahoma

Wheeler Sheehy, Antonia Loui, North Park University, Blackfeet Tribe, MT
White, Richard Kalvin, University of Utah, Navajo Tribe AZ, NM, & UT
White, Sidney John, Marquette University, Oneida of Wisconsin
White Calfe-Sayler, Verlee Key, University of North Dakota, Three Affiliated Tribes of the Ft Berthold Reservation
Whited, Stephanie Lynn, University of Southern Mississippi, Nenana Native Association
Whitehair, Jennifer June, University of North Dakota, Navajo Tribe of AZ, NM, & UT
Whitehair, Rosalita Marie, University of New Mexico, Navajo Tribe of AZ, NM, & UT
Wilcox, Amelia Mae, University of Phoenix, Navajo Tribe of AZ, NM, & UT
Willcuts, Peggy Sue, South Dakota State University, Rosebud Sioux
Willeto, Virginia, University of New Mexico, Navajo Tribe of AZ, NM, & UT
Williams, Alice, Coconino Community College, Navajo Tribe of AZ, NM, & UT
Williams, Amy Nicole, Bartlesville Wesleyan College, Choctaw Nation of Oklahoma
Williams-Begay, Vanessa, University of Phoenix, Navajo Tribe of AZ, NM, & UT
Wilson, Dana Lynn, Northland Pioneer College, Navajo Tribe of AZ, NM, & UT
Wilson, Dena Lynn, University of Washington, Oglala Sioux
Wilson, Mackenzie Paulette, University of Arizona, Navajo Tribe of AZ, NM, & UT
Wilson, Sandra, University of Oklahoma Dental School, Northern Cheyenne
Wing, Ilene Longknife, Montana State University, Assiniboine & Sioux
Winstead, Quana Marie, College of Health Sciences, Eastern Band—Cherokee of North Carolina
Witherspoon, Lachelle Linette, San Fransisco State University, Navajo Tribe of AZ, NM, & UT
Wood, Chad Nathaniel, University of Utah, Cherokee Nation of Oklahoma
Woolley, Eric Brady, University of Oklahoma, Iowa Tribe of Kansas & Nebraska
Work, Hugh Edward, University of Oklahoma Health Sciences Center, Choctaw Nation of Oklahoma
Worker, Shanna Renee, Grand Canyon University, Navajo Tribe of AZ, NM, & UT
Wright, Christy Marie, Arizona State University, Nenana Native Association
Wyaco, Barbie Jen, University of Arizona, Navajo Tribe of AZ, NM, & UT
Yazzie, Abiegail, New Mexico Highlands University, Navajo Tribe of AZ, NM, & UT
Yazzie, Charisse Lindsey, Scottsdale Community College, Navajo Tribe of AZ, NM, & UT
Yazzie, Nazhone Paul, University of Arizona, Navajo Tribe of AZ, NM, & UT
Yazzie, Sharon, University of New Mexico, Navajo Tribe of AZ, NM, & UT
Yazzie, Sheldwin, University of New Mexico—Albuquerque, Navajo Tribe of AZ, NM, & UT
Yazzie, Timothy, Midwestern University, Navajo Tribe of AZ, NM, & UT
Yazzie-Valencia, Martha, University of Oklahoma, Navajo Tribe of AZ, NM, & UT
Ybarra, Ysidro Patrick, University of Alaska, Crow Tribe of Montana
Yoe, Corinna Mae, Weber State University, Navajo Tribe of AZ, NM, & UT
York, Rebecca Ann, University of Arkansas Fayetteville, Cherokee Nation of Oklahoma
Young, Evelyn, Salish Kootenai College, Confederated Salish Kootenai & Tribes
Zubach, Kari Lynn, Carroll College, Blackfeet Tribe
Zunie, Janet, University of New Mexico, Zuni Tribe, NM
Zwaryck, Shelby Leone, University of Great Falls, Chippewa Cree Indians of the Rocky Boy's Reservation

FOR FURTHER INFORMATION CONTACT: The Indian Health Service Scholarship Branch, Twinbrook Metro Plaza, 12300 Twinbrook Parkway, Suite 100, Rockville, Maryland, 20852, Telephone: (301) 443–6197, Fax: (301) 443–6048.

Dated: May 19, 2000.

Michael H. Trujillo,

Assistant Surgeon General, Director.

[FR Doc. 00–13213 Filed 5–25–00; 8:45 am]

BILLING CODE 4160–16–M

DEPARTMENT OF HEALTH AND HUMAN SERVICES

Indian Health Service

Mental Health and Community Safety Initiative for American Indian/Alaska Native Children, Youth and Families

AGENCY: Indian Health Service, HHS.

ACTION: Extension of Deadline for Receipt of Competitive Grant Applications for the Mental Health and Community Safety Initiative for American Indian/Alaska Native (AI/AN) Children, Youth, and Families.

The Notice of funding availability for competitive grants for the mental health and community safety initiative for American Indian/Alaska Native (AI/AN) children, youth, and families was published at 65 FR 26841, on Tuesday, May 9, 2000.

The Indian Health Service (IHS) announces the extension of the application receipt deadlines to June 15, 2000 for the following grant programs included in the above Notice:

1. The AI/AN Mental Health Grants Program funded by the IHS and
2. The Mental Health and Community Safety Initiative for American Indian/Alaska Native (AI/AN) Children, Youth, and Families funded by the Office of Community Oriented Policing Services (COPS).

This extension to June 15, 2000, provides applicants for both of these programs approximately an additional two weeks to prepare and submit competitive applications.

All other information contained in the **Federal Register** announcement and in the consolidated grant application package distributed in early May remains unchanged.

Dated: May 19, 2000.

Michael H. Trujillo,

Assistant Surgeon General, Director.

[FR Doc. 00–13212 Filed 5–25–00; 8:45 am]

BILLING CODE 4160–16–M

DEPARTMENT OF HEALTH AND HUMAN SERVICES

Indian Health Service

Statement of Mission, Organization, Functions and Delegation of Authority

Part G, of the Statement of Organization, Functions, and Delegations of Authority of the Department of Health and Human Services, as amended at 60 FR 56606, November 9, 1995, and most recently amended at 61 FR 67048, December 19, 1996, is amended to reflect a reorganization of the Albuquerque Area Indian Health Service (GFC). The changes are as follows:

Delete the functional statements for the Albuquerque Area in their entirety and replace with the following:

Section GFC–00, Albuquerque Area Indian Health Service—Mission. The Albuquerque Area IHS defines its mission as a commitment to the well-being and cultural integrity of Indian people through a participatory and

consultative process. The goal of the Albuquerque Area IHS is to elevate the health status of American Indian and Alaska Native people to the highest possible level by (1) providing and/or assuring availability, (2) providing increasing opportunities for Indians to manage and operate their own health programs; and (3) serving as an advocate for Indian people.

Section GFC–10, Functions. Office of the Director (GFC1). By specific delegation from the Director, Indian Health Service: (1) Plans, develops, and directs the area program within the framework of IHS policy in pursuit of the IHS mission; (2) delivers and ensures the delivery of high quality comprehensive health services; (3) coordinates the Albuquerque Area Indian Health Service activities and resources, internally and externally, with those of other governmental and nongovernmental programs; (4) promotes optimum utilization of health care services through quality management and delivery of services to American Indian and Alaska Natives; (5) promotes collaboration of Indian tribes and Indian organizations in developing the goals and objectives for the Albuquerque Area Indian Health Service; (6) evaluates the efficiency, economy, legality, and effectiveness with which programs carry out their responsibilities; (7) promotes resource development; and (8) oversees the EEO program and tribal Support Staff Office.

Office of Operational Support (GFC2). (1) Administers the Divisions of Budget, Accounting, Human Resources, Contracts, and Information Management Systems; (2) provides operational consultation; (3) provides resource review, analysis and realignment; (4) develops reporting systems, assessment and auditing procedures; (5) establishes, maintains, and promotes liaison with community, tribal, civic groups, professional organizations, colleges, universities, and other agencies as appropriate; (6) serves as principal advisor to the Chief Medical Officer and Area Director on administrative and management matters involving the Area and headquarters functions for Diabetes, Epidemiology and Information Technology Services; (7) serves as principal advisor on fiscal matters; and (8) provides billing consultation and assessment.

Division of Budget (CFC21). (1) Formulates fiscal budget activities; (2) determines funding amounts available for tribal shares distribution; (3) prepares operating budget authority documents to distribute funds to service units, programs, area support divisions and tribal contractors; (4) oversees and consults on proper cost accounting and cost reporting.

Division of Accounting (GFC22). Responsible for (1) the overall accounting, financial reporting, reconciliation and payment functions for the Albuquerque Area and National Programs-Albuquerque; (2) certifies all travel payments; (3) reconciles with service units, area office divisions, and the U.S. Treasury; (4) performs internal control reviews for the area; (5) oversees tribal shares distribution and payments; (6) consults with tribes on accounting issues; and (7) provides support services to headquarters functions for Diabetes, Epidemiology and Information Technology Services.

Division of Human Resources (GFC23). (1) Plans, implements, coordinates, and evaluates the area civil service and commissioned officer human resources program; (2) develops operating personnel policies, and assures a supportive human resources program which meets the human capital framework of the area; (3) administers operating personnel policies, position classification and pay management, recruitment and staffing, employee relations, labor management, employee development; personnel records and reports; (4) conducts training courses for supervisory and non-supervisory staff; (5) maintains pertinent federal personnel regulation guidelines; (6) serves as principal advisor to the Area Director, Executive Officer, area staff, and service unit staff in matters relating to human resources; (7) keeps abreast of current development of tribal health activities as they relate to the area human resources program; (8) establishes, maintains and promotes liaison with community, tribal, civic groups, professional organizations, colleges, universities, and other agencies as appropriate; (9) oversees the scholarship program; and (10) provides support services to headquarters functions for Diabetes, Epidemiology and Information Technology Services.

Division of Contracts and Grants Management (GFC24). (1) Plans, implements, coordinates, and evaluates the area contract and grants management programs within established requirements and authorities; (2) interprets federal contract, grant and procurement regulations, policies, procedures, and practices; (3) provides technical assistance to Indian tribes, Indian and urban Indian organizations in the development of activities related to procurement capabilities; (4) maintains the federal procurement regulation manuals and the HHS grant administration manuals; (5) provides delegations of authority for service unit procurement; (6) evaluates service unit procurement operations; (7) keeps abreast of current development of tribal health activities as they related to the contract, grant and procurement activity; and (8) provides support services to headquarters functions for Diabetes, Epidemiology and Information Technology Services as delegated by the Headquarters Memorandum of Agreement.

Division of Information Management Services (GFC25). (1) Provides advice on area policies and procedures related to data processing, computer software, computer equipment, and telecommunications; (2) provides technical support on data processing services and software application to the area and service units; (3) assesses area needs for information technology and advises on alternatives; (4) provides training to improve utilization and understanding of information technologies; and (5) works with Headquarters Division of Information Resources (DIR), to design and develop systems that are responsive to area needs and provides tribal support.

Office of Clinical Care Programs (GFC3). Plans, implements, directs, coordinates and evaluates the patient care programs throughout the Albuquerque Area health care system. This office oversees (1) planning/statistics; (2) integrated health systems; (3) medical information; (4) epidemiology; (5) contract health; (6) clinical nursing; (7) diabetes/public health nursing; (8) Community Health Representative/Emergency Medical Services Programs (CHR/EMS); (9) behavioral health; (10) optometry; (11) provider recruitment; (12) serves as the expert in clinical programs for the Albuquerque Area; and (13) serves as liaison for clinical tort claims, sentinel events and risk management issues.

Division of Clinical System Support (GFC31). Provides (1) data gathering for clinical improvement and quality of care; (2) strategic planning and community assessment; (3) Contract Health Services Program (CHS); (4) dental support; and (5) facilitates integrated systems approach with outside agencies.

Division of Clinical Quality (GFC32). (1) coordinates clinical technical assistance that impacts on quality performance and promotes collaboration to improve quality care; (2) oversees the diabetes/public health nursing and clinical nursing programs; behavioral health program; provider recruitment program; and the CHR/EMS program; and (3)O provides area-wide technical

support in the clinical programs and quality council.

Office of Environmental Health & Engineering (GFC4). (1) Administer the area facilities management, sanitation facilities construction, environmental health services, and the national environmental health support functions; (2) serves as the principal advisor to the Area Director, area staff, and service unit staff and healthful environment in IHS facilities and Indian communities; (4) constructs, improves, extends or otherwise provides essential sanitation facilities in Indian homes and communities; (5) maintains liaison and coordinates environmental activities with tribes, area programs, state and local governments, and other outside groups; and (6) provides support services to headquarters functions for Diabetes, Epidemiology and Information Technology Services.

Division of Health Facilities (GFC41). (1) Manages the area health facilities & maintenance program; (2) serves as the liaison with Headquarters and engineering services in Dallas; (3) provides resource coordination; (4) advises service units on Heating, Ventilation, and Air Conditioning (HVAC) & energy issues; (5) advises the service units on construction & utility issues; (6) constructs, maintains, and improves health facilities of the IHS; and (7) manages and controls the area-wide real property program.

Division of Environmental Health Support (GFC42). Provides nationwide training and technical support in the areas of environmental health and injury prevention, engineering, operation and maintenance for the IHS. Coordinates national emergency response activities on behalf of the Indian Health Service.

Section GFN–20, Albuquerque Area IHS-Delegations of Authority. All delegations and redelegations of authority made to officials in the Albuerque Area that were in effect immediately prior to this reorganization, and that are consistent with this reorganization, shall continue in effect pending further redelegation.

This reorganization shall be effective on the date of signature.

Dated: May 16, 2000.

Michel E. Lincoln,

Deputy Director.

[FR Doc. 00–13211 Filed 5–25–00; 8:45 am]

BILLING CODE 4160–16–M

DEPARTMENT OF HEALTH AND HUMAN SERVICES

National Institutes of Health

National Institute on Aging; Amended Notice of Meeting

Notice is hereby given of a change in the meeting of the National Advisory Council on Aging, May 25, 2000, 1 p.m. to May 26, 2000, 12 p.m., 9000 Rockville Pike, Building 31C, Conference Room 6, Bethesda, MD, 20892 which was published in the **Federal Register** on April 18, 2000, 65 FR 21002.

The meeting has been changed to a one day meeting—May 25, 2000 from 1 p.m. to adjournment. The meeting will be open from 1 p.m. until 6 p.m. and closed from 6 p.m. until adjournment. The meeting is partially Closed to the public.

Dated: May 19, 2000.

LaVerne Y. Stringfield,

Director, Office of Federal Advisory Committee Policy.

[FR Doc. 00–13277 Filed 5–25–00; 8:45 am]

BILLING CODE 4140–01–M

DEPARTMENT OF HEALTH AND HUMAN SERVICES

National Institutes of Health

National Center for Research Resources; Notice of Closed Meetings

Pursuant to section 10(d) of the Federal Advisory Committee Act, as amended (5 U.S.C. Appendix 2), notice is hereby given of the following meetings.

The meetings will be closed to the public in accordance with the provisions set forth in sections 552b(c)(4) and 552b(c)(6), Title 5 U.S.C., as amended. The grant applications and the discussions could disclose confidential trade secrets or commercial property such as patentable material, and personal information concerning individuals associated with the grant applications, the disclosure of which would constitute a clearly unwarranted invasion of personal privacy.

Name of Committee: National Center for Research Resources Special Emphasis Panel, Comparative Medicine.

Date: June 15, 2000.

Time: 8 a.m. to 5 p.m.

Agenda: To review and evaluate grant applications.

Place: Holiday Inn Bethesda, 8120 Wisconsin Avenue, Bethesda, MD 20814.

Contact Person: Camille M. King, PhD, Scientific Review Administrator, Office of Review, National Center for Research Resources, National Institutes of Health, One Rockledge Centre, MSC 7965, 6705 Rockledge Drive, Suite 6018, Bethesda, MD 20892–7965, 301–435–0815.

Name of Committee: National Center for Research Resources Special Emphasis Panel, Centers of Biomedical Research Excellence (COBRE).

Date: June 18–20, 2000.

Time: June 18, 2000, 8 p.m. to Adjournment.

Agenda: To review and evaluate grant applications.

Place: Bethesda Marriott Hotel, 5151 Pooks Hill Road, Bethesda, MD 20814.

Contact Person: John J. Ryan, PhD, Scientific Review Administrator, Office of Review, National Center for Research Resources, 6705 Rockledge Drive, MSC 7965, Room 6018, Bethesda, MD 20892–7965, 301–435–0822.

Name of Committee: National Center for Research Resources Special Emphasis Panel, Centers of Biomedical Research Excellence (COBRE).

Date: June 18–20, 2000.

Time: June 25, 2000, 8 p.m. to Adjournment.

Agenda: To review and evaluate grant applications.

Place: Bethesda Marriott Hotel, 5151 Pooks Hill Road, Bethesda, MD 20814.

Contact Person: John J. Ryan, PhD, Scientific Review Administrator, Office of Review, National Center for Research Resources, 6705 Rockledge Drive, MSC 7965, Room 6018, Bethesda, MD 20892–7965, 301–435–0822.

(Catalogue of Federal Domestic Assistance Program Nos. 93.306, Comparative Medicine, 93.306; 93.333, Clinical Research, 93.333; 93.371, Biomedical Technology; 93.389, Research Infrastructure, National Institutes of Health, HHS)

Dated: May 19, 2000.

LaVerne Y. Stringfield,

Director, Office of Federal Advisory Committee Policy.

[FR Doc. 00–13275 Filed 5–25–00; 8:45 am]

BILLING CODE 4140–01–M

DEPARTMENT OF HEALTH AND HUMAN SERVICES

National Institutes of Health

National Eye Institute; Notice of Closed Meeting

Pursuant to section 10(d) of the Federal Advisory Committee Act, as amended (5 U.S.C. Appendix 2), notice is hereby given of the following meeting.

The meeting will be closed to the public in accordance with the provisions set forth in sections 552b(c)(4) and 552b(c)(6), Title 5 U.S.C. as amended. The grant applications and the discussions could disclose confidential trade secrets or commercial property such as patentable material, and personal information concerning

individuals associated with the grant applications, the disclosure of which would constitute a clearly unwarranted invasion of personal privacy.

Name of Committee: National Eye Institute Special Emphasis Panel.
Date: May 22, 2000.
Time: 9 a.m. to 11 a.m.
Agenda: To review and evaluate grant applications.
Place: 6120 Executive Blvd., Suite 350, Rockville, MD 20892, (Telephone Conference Call).
Contact Person: Andrew P. Mariani, Chief, Scientific Review Branch, 6120 Executive Blvd., Suite 350, Rockville, MD 20892, 301/496–5561.

This notice is being published less than 15 days prior to the meeting due to the timing limitations imposed by the review and funding cycle.

(Catalogue of Federal Domestic Assistance Program Nos. 93.867, Vision Research, National Institutes of Health, HHS)

Dated: May 18, 2000.

LaVerne Y. Stringfield,

Director, Office of Federal Advisory Committee Policy.

[FR Doc. 00–13282 Filed 5–25–00; 8:45 am]

BILLING CODE 4140–01–M

DEPARTMENT OF HEALTH AND HUMAN SERVICES

National Institutes of Health

National Eye Institute; Notice of Closed Meeting

Pursuant to section 10(d) of the Federal Advisory Committee Act, as amended (5 U.S.C. Appendix 2), notice is hereby given of the following meeting.

The meeting will be closed to the public in accordance with the provisions set forth in sections 552b(c)(4) and 552b(c)(6), Title 5 U.S.C., as amended. The grant applications and the discussions could disclose confidential trade secrets or commercial property such as patentable material, and personal information concerning individuals associated with the grant applications, the disclosure of which would constitute a clearly unwarranted invasion of personal privacy.

Name of Committee: National Eye Institute Special Emphasis Panel.
Date: May 19, 2000.
Time: 2 pm to 5 pm.
Agenda: To review and evaluate grant applications.
Place: 6120 Executive Blvd., Suite 350, Rockville, MD 20892, (Telephone Conference Call).
Contact Person: Andrew P. Mariani, Chief, Scientific Review Branch, 6120 Executive Blvd., Suite 350, Rockville, MD 20892, 301/496–5561.

This notice is being published less than 15 days prior to the meeting due to the timing limitations imposed by the review and funding cycle.

(Catalogue of Federal Domestic Assistance Program Nos. 93.867, Vision Research, National Institutes of Health, HHS)

Dated: May 18, 2000.

LaVerne Y. Stringfield,

Director, Office of Federal Advisory Committee Policy.

[FR Doc. 00–13283 Filed 5–25–00; 8:45 am]

BILLING CODE 4140–01–M

DEPARTMENT OF HEALTH AND HUMAN SERVICES

National Institutes of Health

National Heart, Lung, and Blood Institute; Notice of Closed Meetings

Pursuant to section 10(d) of the Federal Advisory Committee Act, as amended (5 U.S.C. Appendix 2), notice is hereby given of the following meetings.

The meetings will be closed to the public in accordance with the provisions set forth in sections 552b(c)(4) and 552b(c)(6), Title 5 U.S.C., as amended. The grant applications and the discussions could disclose confidential trade secrets or commercial property such as patentable material, and personal information concerning individuals associated with the grant applications, the disclosure of which would constitute a clearly unwarranted invasion of personal privacy.

Name of Committee: National Heart, Lung, and Blood Institute Special Emphasis Panel Genomic Applications for Heart, Lung and Blood Research (PGA).
Date: June 19–20, 2000.
Time: 8:00 AM to 5:00 PM.
Agenda: To review and evaluate grant applications.
Place: Hyatt Regency Baltimore, On the Inner Harbor, 300 Light Street, Baltimore, MD 21202.
Contact Person: Valerie L. Prenger, PhD, Health Science Administrator, NIH, NHLBI, DEA, Review Branch, Rockledge Center II, 6701 Rockledge Drive, Suite 7198, Bethesda, MD 20892–7924, (301) 435–0297.

Name of Committee: National Heart, Lung, and Blood Institute Special Emphasis Panel Programs of Excellence in Gene Therapy.
Date: July 8–10, 2000.
Time: 7:00 AM to 5:00 PM.
Agenda: To review and evaluate grant applications.
Place: Sheraton Columbia Hotel, 10207 Wincopin Circle, Columbia, MD 21044.
Contact Person: Terry Rogers Bishop, Scientific Review Administrator, Review Branch, NIH, NHLBI, DEA, Rockledge Center II, 6701 Rockledge Drive, Suite 7210, Bethesda, MD 20892–7924, (301) 435–0303.

Name of Committee: National Heart, Lung, and Blood Institute Special Emphasis Panel Positional Candidate Gene Approaches in Asthma Gene Discovery.
Date: July 10, 2000.
Time: 8:00 AM to 5:00 PM
Agenda: To review and evaluate grant applications.
Place: Holiday Inn Chevy Chase, 5520 Wisconsin Avenue, Chevy Chase, MD 20815.
Contact Person: Valerie L. Prenger, PhD, Health Science Administrator, NIH, NHLBI, DEA, Review Branch, Rockledge Center II, 6701 Rockledge Drive, Suite 7198, Bethesda, MD 20892–7924, (301) 435–0297.

(Catalogue of Federal Domestic Assistance Program Nos. 93.233, National Center for Sleep Disorders Research; 93.837, Heart and Vascular Diseases Research; 93.838, Lung Diseases Research; 93.839, Blood Disease and Resources Research, National Institutes of Health, HHS)

Dated: May 18, 2000.

LaVerne Y. Stringfield,

Director, Office of Federal Advisory Committee Policy.

[FR doc. 00–13274 Filed 5–25–00; 8:45am]

BILLING CODE 4140–01–M

DEPARTMENT OF HEALTH AND HUMAN SERVICES

National Institutes of Health

National Institute of Mental Health; Notice of Closed Meetings

Pursuant to section 10(d) of the Federal Advisory Committee Act, as amended (5 U.S.C. Appendix 2), notice is hereby given of the following meetings.

The meetings will be closed to the public in accordance with the provisions set forth in sections 552b(c)(4) and 552b(c)(6), Title 5 U.S.C., as amended. The grant applications and the discussion could disclose confidential trade secrets or commercial property such as patentable material, and personal information concerning individuals associated with the grant applications, the disclosure of which would constitute a clearly unwarranted invasion of personal privacy.

Name of Committee: National Institute of Mental Health Special Emphasis Panel.
Date: June 20–21, 2000.
Time: 8:30 a.m. to 5 p.m.
Agenda: To review and evaluate grant applications.
Place: The Hotel Lombardy, 2019 I Street, NW, Washington, DC 20006.
Contact Person: Gerald E. Calderone, PhD, Scientific Review Administrator, Division of Extramural Activities, National Institute of Mental Health, NIH, Neuroscience Center,

6001 Executive Blvd., Rm. 6150, MSC 9608, Bethesda, MD 20892–9608, 301–443–1340.

Name of Committee: National Institute of Mental Health Special Emphasis Panel.

Date: June 30, 2000.

Time: 8:30 a.m. to 5 p.m.

Agenda: To review and evaluate grant applications.

Place: Chevy Chase Holiday Inn, 5520 Wisconsin Ave., Chevy Chase, MD 20815.

Contact Person: Robert H. Stretch, PhD, Scientific Review Administrator, Division of Extramural Activities, National Institute of Mental Health, NIH, Neuroscience Center, 6001 Executive Blvd., Room 6150, MSC 9608, Bethesda, MD 20892–9608, 301–443–4728.

Name of Committee: National Institute of Mental Health Special Emphasis Panel.

Date: July 6, 2000.

Time: 8:30 a.m. to 5 p.m.

Agenda: To review and evaluate grant applications.

Place: Chevy Chase Holiday Inn, 5520 Wisconsin Ave., Chevy Chase, MD 20815.

Contact Person: Robert H. Stretch, PhD, Scientific Review Administrator, Division of Extramural Activities, National Institute of Mental Health, NIH, Neuroscience Center, 6001 Executive Blvd., Room 6150, MSC 9608, Bethesda, MD 20892–9608, 301–443–4728.

Name of Committee: National Institute of Mental Health Special Emphasis Panel.

Date: July 12, 2000.

Time: 2 p.m. to 5 p.m.

Agenda: To review and evaluate grant applications.

Place: Neuroscience Center, National Institutes of Health, 6001 Executive Blvd., Bethesda, MD 20892, (Telephone Conference Call).

Contact Person: David I. Sommers, PhD, Scientific Review Administrator, Division of Extramural Activities, National Institute of Mental Health, NIH, Neuroscience Center, 6001 Executive Blvd., Room 6144, MSC 9606, Bethesda, MD 20892–9606, 301–443–6470.

(Catalogue of Federal Domestic Assistance Program Nos. 93.242, Mental Health Research Grants; 93.281, Scientist Development Award, Scientist Development Award for Clinicians, and Research Scientist Award; 93.282, Mental Health National Research Service Awards for Research Training, National Institutes of Health, HHS)

Dated: May 19, 2000.

LaVerne Y. Stringfield,

Director, Office of Federal Advisory Committee Policy.

[FR Doc. 00–13276 Filed 5–25–00; 8:45 am]

BILLING CODE 4140–01–M

DEPARTMENT OF HEALTH AND HUMAN SERVICES

National Institutes of Health

National Institute of Child Health and Human Development; Notice of Closed Meeting

Pursuant to section 10(d) of the Federal Advisory Committee Act, as amended (5 U.S.C. Appendix 2), notice is hereby given of the following meeting.

The meeting will be closed to the public in accordance with the provisions set forth in sections 552b(c)(4) and 552b(c)(6), Title 5 U.S.C., as amended. The grant applications and the discussions could disclose confidential trade secrets or commercial property such as patentable material, and personal information concerning individuals associated with the grant applications, the disclosure of which would constitute a clearly warranted invasion of personal privacy.

Name of Committee: National Institute of Child Health and Human Development Special Emphasis Panel.

Date: June 27–28, 2000.

Time: 7:30 p.m. to 12 p.m.

Agenda: To review and evaluate grant applications.

Place: 8120 Wisconsin Avenue, Bethesda, MD 20814.

Contact Person: Jon M. Ranhand, Scientist Review Administrator, Division of Scientific Review, National Institute of Child Health and Human Development, NIH, 6100 Executive Blvd., Room 5E03, Bethesda, MD 20892, (301) 435–6884.

(Catalogue of Federal Domestic Assistance Program Nos. 93.209, Contraception and Infertility Loan Repayment Program; 93.864, Population Research; 93.865, Research for Mothers and Children; 93.929, Center for Medical Rehabilitation Research, National Institutes of Health, HHS)

Dated: May 19, 2000.

LaVerne Y. Stringfield,

Director, Office of Federal Advisory Committee Policy.

[FR Doc. 00–13278 Filed 5–25–00; 8:45 am]

BILLING CODE 4140–01–M

DEPARTMENT OF HEALTH AND HUMAN SERVICES

National Institutes of Health

National Institute of Child Health and Human Development; Notice of Closed Meeting

Pursuant to section 10(d) of the Federal Advisory Committee Act, as amended (5 U.S.C. Appendix 2), notice is hereby given of the following meeting.

The meeting will be closed to the public in accordance with the provisions set forth in sections 552b(c)(4) and 552b(c)(6), Title 5 U.S.C., as amended. The grant applications and the discussions could disclose confidential trade secrets or commercial property such as patentable material, and personal information concerning individuals associated with the grant applications, the disclosure of which would constitute a clearly unwarranted invasion of personal privacy.

Name of Committee: National Institute of Child Health and Human Development Initial Review Group Population Research subcommittee.

Date: June 26–27, 2000.

Time: 8 a.m. to 12:30 p.m.

Agenda: To review and evaluate grant applications.

Place: Bethesda Holiday Inn, 8120 Wisconsin Avenue, Bethesda, MD 20814.

Contact Person: Jon M. Ranhand, Health Scientist Administrator, Division of Scientific Review, National Institute of Child Health and Human Development, 6100 Executive Blvd., Rm. 5E01, MSC 7510, Bethesda, MD 20892, (301) 435–6884.

(Catalogue of Federal Domestic Assistance Program Nos. 93.209, Contraception and Infertility Loan Repayment Program; 93.864, Population Research; 93.865, Research for Mothers and Children; 93.929, Center for Medical Rehabilitation Research, National Institutes of Health, HHS)

Dated: May 19, 2000.

LaVerne Y. Stringfield,

Director, Office of Federal Advisory Committee Policy.

[FR Doc. 00–13279 Filed 5–25–00; 8:45 am]

BILLING CODE 4140–01–M

DEPARTMENT OF HEALTH AND HUMAN SERVICES

National Institutes of Health

National Institute of Arthritis and Musculoskeletal and Skin Diseases; Notice of Closed Meeting

Pursuant to section 10(d) of the Federal Advisory Committee Act, as amended (5 U.S.C. Appendix 2), notice is hereby given of the following meeting.

The meeting will be closed to the public in accordance with the provisions set forth in sections 522b(c)(4) and 552b(c)(6), Title 5 U.S.C., as amended. The grant applications and the discussions could disclose confidential trade secrets or commercial property such as patentable material, and personal information concerning individuals associated with the grant applications, the disclosure of which would constitute a clearly unwarranted invasion of personal privacy.

Name of Committee: Arthritis and Musculoskeletal and Skin Diseases Special Grants Review Committee.

Date: June 20, 2000.

Time: 8 am to 5 pm.

Agenda: To review and evaluate grant applications.

Place: Bethesda Marriott, 5151 Pooks Hill Road, Bethesda, MD 20892.

Contact Person: John R. Lymangrover, Scientific Review Administrator, National

Institutes of Health, NIAMS, Natcher Bldg., Room 5As25N, Bethesda, MD 20892, 301–594–4952.

(Catalogue of Federal Domestic Assistance Program Nos. 93.846, Arthritis, Musculoskeletal and Skin Diseases Research, National Institutes of Health, HHS)

Dated: May 19, 2000.

LaVerne Y. Stringfield,

Director, Office of Federal Advisory Committee Policy.

[FR Doc. 00–13280 Filed 5–25–00; 8:45am]

BILLING CODE 4140–01–M

DEPARTMENT OF HEALTH AND HUMAN SERVICES

National Institutes of Health

Center for Scientific Review; Notice of Closed Meetings

Pursuant to section 10(d) of the Federal Advisory Committee Act, as amended (5 U.S.C. Appendix 2), notice is hereby given of the following meetings.

The meetings will be closed to the public in accordance with the provisions set forth in sections 552b(c)(4) and 552b(c)(6), Title 5 U.S.C., as amended. The grant applications and the discussions could disclose confidential trade secrets or commercial property such as patentable material, and personal information concerning individuals associated with the grant applications, the disclosure of which would constitute a clearly unwarranted invasion of personal privacy.

Name of Committee: Oncological Sciences Integrated Review Group, Pathology B Study Section.

Date: June 7–9, 2000.

Time: 8 a.m. to 6 p.m.

Agenda: To review and evaluate grant applications.

Place: Holiday Inn Georgetown, Kaleidoscope Room, 2101 Wisconsin Avenue, Washington, DC 20007.

Contact Person: Martin L. Padarathsingh, Scientific Review Administrator, Center for Scientific Review, National Institutes of Health, 6701 Rockledge Drive, Room 4146, MSC 7804, Bethesda, MD 20892, (301) 435–1717.

This notice is being published less than 15 days prior to the meeting due to the timing limitations imposed by the review and funding cycle.

Name of Committee: Social Sciences, Nursing, Epidemiology and Methods Integrated Review Group Epidemiology and Disease Control Subcommittee 1.

Date: June 7–9, 2000.

Time: 8:30 a.m. to 5 p.m.

Agenda: To review and evaluate grant applications.

Place: Bethesda Holidy Inn, 8120 Wisconsin Avenue, Bethesda, MD 20814.

Contact Person: J. Scott Osborne, PHD, Scientific Review Administrator, Center for Scientific Review, National Institutes of Health, 6701 Rockledge Drive, Room 4114, MSC 7816, Bethesda, MD 20892, (301) 435–1782.

This notice is being published less than 15 days prior to the meeting due to the timing limitations imposed by the review and funding cycle.

Name of Committee: Infectious Diseases and Microbiology Integrated Review Group, Bacteriology and Mycology Subcommittee 2.

Date: June 7–9, 2000.

Time: 8:30 a.m. to 5:30 p.m.

Agenda: To review and evaluate grant applications.

Place: Holiday Inn, 5520 Wisconsin Avenue, Chevy Chase, MD 20815.

Contact Person: William C. Branche, Scientific Review Administrator, Center for Scientific Review, National Institutes of Health, 6701 Rockledge Drive, Room 4182, MSC 7808, Bethesda, MD 20892, (301) 435–1148, branchew@csr.nih.gov.

This notice is being published less than 15 days prior to the meeting due to the timing limitations imposed by the review and funding cycle.

Name of Committee: Cardiovascular Sciences Integrated Review Group, Hematology Subcommittee 1.

Date: June 8–9, 2000.

Time: 8 am to 10:30 am.

Agenda: To review and evaluate grant applications.

Place: Holiday Inn Bethesda, Versailles Room 4, 8120 Wisconsin Avenue, Bethesda, MD 20814.

Contact Person: Robert Su, Scientific Review Administrator, Center for Scientific Review, National Institutes of Health, 6701 Rockledge Drive, Room 4134, MSC 7802, Bethesda, MD 20892, (301) 435–1195.

Name of Committee: Infectious Diseases and Microbiology Integrated Review Group, Tropical Medicine and Parasitology Study Section.

Date: June 8–9, 2000.

Time: 8:30 am to 5 pm.

Agenda: To review and evaluate grant applications.

Place: Bethesda Holiday Inn, 8120 Wisconsin Avenue, Bethesda, MD 20852.

Contact Person: Jean Hickman, Scientific Review Administrator, Center for Scientific Review, National Institutes of Health, 6701 Rockledge Drive, Room 4194, MSC 7808, Bethesda, MD 20892, (301) 435–1146.

Name of Committee: Biochemical Sciences Integrated Review Group, Pathobiochemistry Study Section.

Date: June 8–9, 2000.

Time: 8:30 am to 12 pm.

Agenda: To review and evaluate grant applications.

Place: Chevy Chase Holiday Inn, 5520 Wisconsin Ave., Chevy Chase, MD 20815.

Contact Person: Zakir Bengali, Scientific Review Administrator, Center for Scientific Review, National Institutes of Health, 6701 Rockledge Drive, Room 5150, MSC 7842, Bethesda, MD 20892, (301) 435–1742.

Name of Committee: Center for Scientific Review Special Emphasis Panel.

Date: June 8–9, 2000.

Time: 8:30 am to 5 pm.

Agenda: To review and evaluate grant applications.

Place: One Washington Circle Hotel, Conference Center, One Washington Circle, Washington, DC 20037.

Contact Person: Jay Cinque, Scientific Review Administrator, Center for Scientific Review, National Institutes of Health, 6701 Rockledge Drive, Room 5186, MSC 7846, Bethesda, MD 20892, (301) 435–1252.

Name of Committee: Center for Scientific Review Special Emphasis Panel.

Date: June 8–9, 2000.

Time: 8:30 am to 5 pm.

Agenda: To review and evaluate grant applications.

Place: Radisson Barcelo Hotel, 2121 P St., NW, Washington, DC 20037.

Contact Person: Victoria S. Levin, Scientific Review Administrator, Center for Scientific Review, National Institutes of Health, 6701 Rockledge Drive, Room 3172, MSC 7848, Bethesda, MD 20892, (301) 435–0912, levin@csr.nih.gov.

Name of Committee: Pathophysiological Sciences Integrated Review Group, Respiratory and Applied Physiology Study Section.

Date: June 8–9, 2000.

Time: 8:30 a.m. to 5 p.m.

Agenda: To review and evaluate grant applications.

Place: Chevy Chase Holiday Inn, 5520 Wisconsin Ave., Chevy Chase, MD 20815.

Contact Person: Everett E. Sinnett, Scientific Review Administrator, Center for Scientific Review, National Institutes of Health, 6701 Rockledge Drive, Room 2178, MSC 7818, Bethesda, MD 20892, (301) 435–1016, sinnett@nih.gov.

Name of Committee: Genetic Sciences Integrated Review Group, Genetics Study Section.

Date: June 9–10, 2000.

Time: 8:30 a.m. to 12 p.m.

Agenda: To review and evaluate grant applications.

Place: The River Inn, 924 Twenty-Fifth Street, N.W., Washington, DC. 20037.

Contact Person: David J. Remonidini, Scientific Review Administrator, Center for Scientific Review, National Institutes of Health, 6701 Rockledge Drive, Room 6154, MSC 7890, Bethesda, MD 20892, (301) 435–1038, remondid@csr.nih.gov..

Name of Committee: Center for Scientific Review Special Emphasis Panel.

Date: June 8–9, 2000.

Time: 9 a.m. to 5 p.m.

Agenda: To review and evaluate grant applications.

Place: Georgetown Suites, 1000 29th St., NW, Washington, DC 20007.

Contact Person: Thomas A. Tatham, Scientific Review Administrator, Center for Scientific Review, National Institutes of Health, 6701 Rockledge Drive, Room 3188, MSC 7848, Bethesda, MD 20892, (301) 435–0692, tathamt@csr.nih.gov.

Name of Committee: Center for Scientific Review Special Emphasis Panel.

Date: June 8, 2000.

Time: 2 p.m. to 3 p.m.

Agenda: To review and evaluate grant applications.

Place: NIH, Rockledge 2, Bethesda, MD 20892, (Telephone Conference Call).

Contact Person: Lee Rosen, Scientific Review Administrator, Center for Scientific Review, National Institutes of Health, 6701 Rockledge Drive, Room 5116, MSC 7854, Bethesda, MD 20892, (301) 435–1171.

Name of Committee: Center for Scientific Review Special Emphasis Panel, SSS–4 (02).

Date: June 9, 2000.

Time: 8 a.m. to 1 p.m.

Agenda: To review and evaluate grant applications.

Place: The River Inn, 924 25th Street, Washington, DC 20037.

Contact Person: Stephen M. Nigida, Scientific Review Administrator, Center for Scientific Review, National Institutes of Health, 6701 Rockledge Drive, Room 4112, MSC 7812, Bethesda, MD 20892, (301) 435–3565.

Name of Committee: Center for Scientific Review Special Emphasis Panel.

Date: June 9, 2000.

Time: 8:30 a.m. to 5:30 p.m.

Agenda: To review and evaluate grant applications.

Place: Omni Shoreham Hotel, 2500 Calvert Street, NW, Washington, DC 20008.

Contact Person: Betty Haden, Scientific Review Administrator, Center for Scientific Review, National Institutes of Health, 6701 Rockledge Drive, Room 4206, MSC 7812, Bethesda, MD 20892, 301–435–1223, haydenb@csr.nih.gov.

Name of Committee: Center for Scientific Review Special Emphasis Panel.

Date: June 9, 2000.

Time: 11 a.m. to 4 p.m.

Agenda: To review and evaluate grant applications and/or proposals.

Place: Holiday Inn Bethesda, Versailles Room 4, 8120 Wisconsin Avenue, Bethesda, MD 20814.

Contact Person: Robert T. Su, Scientific Review Administrator, Center for Scientific Review, National Institutes of Health, 6701 Rockledge Drive, Room 4134, MSC 7840, Bethesda, MD 20892, 301–435–1195.

(Catalogue of Federal Domestic Assistance Program Nos. 93.306, Comparative Medicine, 93.306; 93.333, Clinical Research, 93.333, 93.337, 93.393–93.396, 93.837–93.844, 93.846–93.878, 93.892, 93.893, National Institutes of Health, HHS)

Dated: May 19, 2000.

LaVerne Y. Stringfield,

Director, Office of Federal Advisory Committee Policy.

[FR Doc. 00–13281 Filed 5–25–00; 8:45 am]

BILLING CODE 4140–01–M

DEPARTMENT OF HOUSING AND URBAN DEVELOPMENT

[Docket No. FR–4565–N–13]

Notice of Proposed Information Collection: Comment Request; Supplement to Subscription Agreement for Cooperative Management-Type Applicants Under Section 213 and 221(d)(3)

AGENCY: Office of the Assistant Secretary for Housing, HUD.

ACTION: Notice.

SUMMARY: The proposed information collection requirement described below will be submitted to the Office of Management and Budget (OMB) for review, as required by the Paperwork Reduction Act. The Department is soliciting public comments on the subject proposal.

DATES: *Comments Due Date:* July 25, 2000.

ADDRESSES: Interested persons are invited to submit comments regarding this proposal. Comments should refer to the proposal by name and/or OMB Control Number and should be sent to; Wayne Eddins, Reports Management Officer, Department and Housing and Urban Development, 451 7th Street, SW, L'Enfant Building, Room 8202, Washington, DC 20410, telephone (202) 708–5221 (this is not a toll-free number) for copies of the proposed forms and other available information.

FOR FURTHER INFORMATION CONTACT: Willie Spearmon, Director, Office of Business Products, U.S. Department of Housing and Urban Development, 451 7th Street SW, Washington, DC 20410, telephone number (202) 708–3000 (this is not a toll-free number).

SUPPLEMENTARY INFORMATION: The Department is submitting the proposed information collection to OMB for review, as required by the Paperwork Reduction Act of 1995 (44 U.S.C. Chapter 35, as amended).

This Notice is soliciting comments from members of the public and affected agencies concerning the proposed collection of information to: (1) Evaluate whether the proposed collection is necessary for the proper performance of the functions of the agency, including whether the information will have practical utility; (2) Evaluate the accuracy of the agency's estimate of the burden of the proposed collection of information; (3) Enhance the quality, utility, and clarity of the information to be collected; and (4) Minimize the burden of the collection of information on those who are to respond; including the use of appropriate automated collection techniques or other forms of information technology, e.g., permitting electronic submission of responses.

This Notice also lists the following information:

Title of Proposal: Supplement to Subscription Agreement for Cooperative Management-Type Applicants Under Section 213 and 221(d)(3).

OMB Control Number, if applicable: 2502–0058.

Description of the need for the information and proposed use: Section 213 and 221(d)(3) of the National Housing Act, as amended authorizes the Secretary to insure mortgages covering property held by a non-profit cooperative ownership housing cooperation. It states: ''Any mortgages insured under this Section shall provide for complete amortization by periodic payments within such terms as the Secretary may prescribe but not to exceed forty years from the beginning of amortization of the mortgage * * *.'' In order to determine the capacity of the borrower corporation and the individual members to meet the statutory requirement for repayment, the Department must require and review information as to the applicant's financial and credit history.

Agency form numbers, if applicable: HUD–93232A.

Estimation of the total numbers of hours and needed to prepare the information collection including number of respondents, frequency of response, and hours of response: The estimated number of respondents is 100, the frequency of response is 100, the frequency of response is 12, the estimated time per response is 15 minutes, and the requested annual burden hours is 300.

Status of the proposed information collection: Reinstatement with change.

Authority: The Paperwork Reduction Act of 1995, 44 U.S.C., Chapter 35, as amended.

Dated: May 15, 2000.

William C. Apgar,

Assistant Secretary for Housing-Federal Housing Commissioner.

[FR Doc. 00–13235 Filed 5–25–00; 8:45 am]

BILLING CODE 4210–27–M

DEPARTMENT OF HOUSING AND URBAN DEVELOPMENT

[Docket No. FR–4557–N–21]

Federal Property Suitable as Facilities To Assist the Homeless

AGENCY: Office of the Assistant Secretary for Community Planning and Development, HUD.

ACTION: Notice.

SUMMARY: This Notice identifies unutilized, underutilized, excess, and surplus Federal property reviewed by HUD for suitability for possible use to assist the homeless.

FOR FURTHER INFORMATION CONTACT: Clifford Taffet, room 7266, Department of Housing and Urban Development, 451 Seventh Street SW, Washington, DC 20410; telephone (202) 708–1234; TTY number for the hearing- and speech-impaired (202) 708–2565 (these telephone numbers are not toll-free), or call the toll-free Title V information lines at 1–800–927–7588.

SUPPLEMENTARY INFORMATION: In accordance with 24 CFR part 581 and section 501 of the Stewart B. McKinney Homeless Assistance Act (42 U.S.C. 11411), as amended, HUD is publishing this Notice to identify Federal buildings and other real property that HUD has reviewed for suitability for use to assist the homeless. The properties were reviewed using information provided to HUD by Federal landholding agencies regarding unutilized and underutilized buildings and real property controlled by such agencies or by GSA regarding its inventory of excess or surplus Federal property. This Notice is also published in order to comply with the December 12, 1988 Court Order in *National Coalition for the Homeless v. Veterans Administration,* No. 88–2503–OG (D.D.C.).

Properties reviewed are listed in this Notice according to the following categories: Suitable/available, suitable/unavailable, suitable/to be excess, and unsuitable. The properties listed in the three suitable categories have been reviewed by the landholding agencies, and each agency has transmitted to HUD: (1) Its intention to make the property available for use to assist the homeless, (2) its intention to declare the property excess to the agency's needs, or (3) a statement of the reasons that the property cannot be declared excess or made available for use as facilities to assist the homeless.

Properties listed as suitable/available will be available exclusively for homeless use for a period of 60 days from the date of this Notice. Homeless assistance providers interested in any such property should send a written expression of interest to HHS, addressed to Brian Rooney, Division of Property management, Program Support Center, HHS, room 5B–41, 5600 Fishers Lane, Rockville, ND 20857; (301) 443–2265. (This is not a toll-free number.) HHS will mail to the interested provider an application packet, which will include instructions for completing the application. In order to maximize the opportunity to utilize a suitable property, providers should submit their written expressions of interest as soon as possible. For complete details concerning the processing of applications, the reader is encouraged to refer to the interim rule governing this program, 24 CFR part 581.

For properties listed as suitable/to be excess, that property may, if subsequently accepted as excess by GSA be made available for use by the homeless in accordance with applicable law, subject to screening for other Federal use. At the appropriate time, HUD will publish the property in a Notice showing it as either suitable/available or suitable/unavailable.

For properties listed as suitable/unavailable, the landholding agency has decided that the property cannot be declared excess or made available for use to assist the homeless, and the property will not be available.

Properties listed as unsuitable will not be made available for any other purpose for 20 days from the date of this Notice. Homeless assistance providers interested in a review by HUD of the determination of unsuitability should call the toll free information line at 1–800–927–7588 for detailed instructions or write a letter to Clifford Taffet at the address listed at the beginning of this Notice. Included in the request for review should be the property address (including zip code), the date of publication in the **Federal Register**, the landholding agency, and the property number.

For more information regarding particular properties identified in this Notice (*i.e.,* acreage, floor plan, existing sanitary facilities, exact street address), providers should contact the appropriate landholding agencies at the following addresses: *COE:* Ms. Shirley Middleswarth, Army Corps of Engineers, Management & Disposal Division, Pulaski Bldg., Room 4224, 20 Massachusetts Avenue, NW, Washington, DC 20314–1000; (202) 761–0515; *GSA:* Mr. Brian K. Polly, Assistant Commissioner, General Services Administration, Office of Property Disposal, 18th and F Streets, NW, Washington, DC 20405; (202) 501–0052; *Energy:* Mr. Tom Knox, Department of Energy, Office of Contract & Resource Management, MA–52, Washington, DC 20585; (202) 586–8715; *Navy:* Mr. Charles C. Cocks, Director, Department of the Navy, Real Estate Policy Division, Naval Facilities Engineering Command, Washington Navy Yard, 1322 Patterson Ave., SE, Suite 1000, Washington, DC 20374–5065; (202) 685–9200; (These are not toll-free numbers).

Dated: May 18, 2000.

Fred Karnas, Jr.,

Deputy Assistant Secretary for Special needs Assistance Programs.

Title V, Federal Surplus Property Program; Federal Register Report for 5/26/00

Suitable/Available Properties

Buildings (by State)

California

Bldg. 371
Naval Warfare Systems Center
San Diego Co: CA 92152–
Landholding Agency: Navy
Property Number: 77200020080
Status: Unutilized
Comment: 29,800 sq. ft., needs rehab, presence of asbestos/lead paint, off-site use only

Bldg. 402
Naval Warfare Systems Center
San Diego Co: CA 92152–
Landholding Agency: Navy
Property Number: 77200020081
Status: Unutilized
Comment: presence of lead paint, most recent use—storage, off-site use only

Bldg. 417
Naval Warfare Systems Center
San Diego Co: CA 92152–
Landholding Agency: Navy
Property Number: 77200020082
Status: Unutilized
Comment: 100 TR, needs rehab, presence of asbestos/lead paint, off-site use only

Bldg. 418
Naval Warfare Systems Center
San Diego Co: CA 92152–
Landholding Agency: Navy
Property Number: 77200020083
Status: Unutilized
Comment: 288 sq. ft., presence of lead paint, most recent use—storage, off-site use only

Bldg. 426
Naval Warfare Systems Center
San Diego Co: CA 92152–
Landholding Agency: Navy
Property Number: 77200020084
Status: Unutilized
Comment: presence of asbestos/lead paint, off-site use only

Bldg. 434
Naval Warfare Systems Center
San Diego Co: CA 92152–
Landholding Agency: Navy
Property Number: 77200020085
Status: Unutilized
Comment: 11,440 sq. ft., needs rehab, presence of asbestos/lead paint, off-site use only

Bldg. 210
Naval Warfare Assessment Station
Corona Co: CA 91718–5000
Landholding Agency: Navy
Property Number: 77200020086
Status: Unutilized
Comment: 17,708 sq. ft., needs rehab, presence of asbestos/lead paint, most recent use—police station, off-site use only

Bldg. 541
Naval Warfare Assessment Station
Corona Co: CA 91718–5000

Landholding Agency: Navy
Property Number: 77200020087
Status: Unutilized
Comment: 3,857 sq. ft., needs rehab, presence of asbestos/lead paint, most recent use—lab, off-site use only

Bldg. 804
Naval Warfare Assessment Station
Corona Co: CA 91718–5000
Landholding Agency: Navy
Property Number: 77200020088
Status: Unutilized
Comment: 3,119 sq. ft., needs rehab, presence of asbestos/lead paint, most recent use—admin., off-site use only

Bldg. 805
Naval Warfare Assessment Station
Corona Co: CA 91718–5000
Landholding Agency: Navy
Property Number: 77200020089
Status: Unutilized
Comment: 3,632 sq. ft., needs rehab, presence of asbestos/lead paint, most recent use—storage, off-site use only

Bldg. 806
Naval Warfare Assessment Station
Corona Co: CA 91718–5000
Landholding Agency: Navy
Property Number: 77200020090
Status: Unutilized
Comment: 3,110 sq. ft., needs rehab, presence of asbestos/lead paint, most recent use—office, off-site use only

Bldg. 807
Naval Warfare Assessment Station
Corona Co: CA 91718–5000
Landholding Agency: Navy
Property Number: 77200020091
Status: Unutilized
Comment: 3,110 sq. ft., needs rehab, presence of asbestos/lead paint, most recent use—office, off-site use only

North Carolina

Goldsboro Federal Bldg.
134 North John Street
Goldsboro Co: Wayne NC 27530
Landholding Agency: GSA
Property Number: 54200020016
Status: Excess
Comment: 24,492 sq. ft., presence of asbestos/lead paint
GSA Number: 4–G–NC–736

North Dakota

Office Bldg.
Lake Oahe Project
3rd & Main
Ft. Yates Co; Sioux ND 58538–
Landholding Agency: COE
Property Number: 31200020001
Status: Unutilized
Comment: 1200 sq. ft., 2-story wood, off-site use only

Unsuitable Properties

Building (by State)

California

Bldgs. 5157, 5158
Construction Battalion Center
Port Hueneme Co: Ventura CA 93043–4301
Landholding Agency: Navy
Property Number: 77200020045
Status: Unutilized
Reason: Secured Area

Facility 13181
Camp Pendleton
Camp Pendleton Co: CA 92055–
Landholding Agency: Navy
Property Number: 77200020046
Status: Unutilized
Reasons: Secured Area, Extensive deterioration

Facility 14220
Camp Pendleton
Camp Pendleton Co: CA 92055–
Landholding Agency: Navy
Property Number: 77200020047
Status: Unutilized
Reasons: Secured Area, Extensive deterioration

Facility 24151
Camp Pendleton
Camp Pendleton Co: CA 92055–
Landholding Agency: Navy
Property Number: 77200020048
Status: Unutilized
Comment: Secured Area, Extensive deterioration

Florida

Bldg. 7H
Naval Air Station
Jacksonville Co: FL 32212–
Landholding Agency: Navy
Property Number: 77200020064
Status: Unutilized
Comment: Secured Area, Extensive deterioration

Bldg. 7J
Naval Air Station
Jacksonville Co: FL 32212–
Landholding Agency: Navy
Property Number: 77200020065
Status: Unutilized
Comment: Secured Area, Extensive deterioration

Bldg. 7K
Naval Air Station
Jacksonville Co: FL 32212–
Landholding Agency: Navy
Property Number: 77200020066
Status: Unutilized
Comment: Secured Area, Extensive deterioration

Bldg. 106
Naval Air Station
Jacksonville Co: FL 32212–
Landholding Agency: Navy
Property Number: 77200020067
Status: Unutilized
Comment: Secured Area, Extensive deterioration

Bldg. 135
Naval Air Station
Jacksonville Co: FL 32212–
Landholding Agency: Navy
Property Number: 77200020068
Status: Unutilized
Comment: Secured Area, Extensive deterioration

Bldg. 142
Naval Air Station
Jacksonville Co: FL 32212–
Landholding Agency: Navy
Property Number: 77200020069
Status: Unutilized
Comment: Secured Area, Extensive deterioration

Bldg. 584
Naval Air Station
Jacksonville Co: FL 32212–
Landholding Agency: Navy
Property Number: 77200020070
Status: Unutilized
Comment: Secured Area, Extensive deterioration

Bldg. 610
Naval Air Station
Jacksonville Co: FL 32212–
Landholding Agency: Navy
Property Number: 77200020071
Status: Unutilized
Comment: Secured Area, Extensive deterioration

Bldg. 702
Naval Air Station
Jacksonville Co: Duval FL 32212–
Landholding Agency: Navy
Property Number: 77200020072
Status: Unutilized
Reasons: Secured Area, Extensive deterioration

Bldg. 703
Naval Air Station
Jacksonville Co: Duval FL 32212–
Landholding Agency: Navy
Property Number: 77200020073
Status: Unutilized
Reasons: Secured Area, Extensive deterioration

Bldg. 725
Naval Air Station
Jacksonville, Co: Duval FL 32212–
Landholding Agency: Navy
Property Number: 77200020074
Status: Unutilized
Reasons: Secured Area, Extensive deterioration

Bldg. 740A
Naval Air Station
Jacksonville Co: Duval FL 32212–
Landholding Agency: Navy
Property Number: 77200020075
Status: Unutilized
Reasons: Secured Area, Extensive deterioration

Bldg. 54
Naval Station
Mayport Co: Duval FL 32228–
Landholding Agency: Navy
Property Number: 77200020076
Status: Unutilized
Reasons: Secured Area, Extensive deterioration

Bldg. 211
Naval Station
Mayport Co: Duval FL 32228–
Landholding Agency: Navy
Property Number: 77200020077
Status: Unutilized
Reasons: Secured Area, Extensive deterioration

Guam

Bldg. 26
U.S. Naval Forces, Marianas
Waterfront Annex Co: GU 96540–0051
Landholding Agency: Navy
Property Number: 77200020049
Status: Unutilized
Reason: Secured Area

Bldg. 264
U.S. Naval Forces, Marianas
Waterfront Annex Co: GU 96540–0051

Landholding Agency: Navy
Property Number: 77200020050
Status: Unutilized
Reasons: Within 2000 ft. of flammable or explosive material, Secured Area, Extensive deterioration

Bldg. 3112
U.S. Naval Forces, Marianas
Waterfront Annex Co: GU 96540–0051
Landholding Agency: Navy
Property Number: 77200020051
Status: Unutilized
Reason: Secured Area

Bldg. 3116
U.S. Naval Forces, Marianas
Waterfront Annex Co: GU 96540–0051
Landholding Agency: Navy
Property Number: 77200020052
Status: Unutilized
Reason: Secured Area

Bldg. 3117
U.S. Naval Forces, Marianas
Waterfront Annex Co: GU 96540–0051
Landholding Agency: Navy
Property Number: 77200020053
Status: Unutilized
Reason: Secured Area

Bldg. 3118
U.S. Naval Forces, Marianas
Waterfront Annex Co: GU 96540–0051
Landholding Agency: Navy
Property Number: 77200020054
Status: Unutilized
Reason: Secured Area

Bldg. 3120
U.S. Naval Forces, Marianas
Waterfront Annex Co: GU 96540–0051
Landholding Agency: Navy
Property Number: 77200020055
Status: Unutilized
Reason: Secured Area

Bldg. 3121
U.S. Naval Forces, Marianas
Waterfront Annex Co: GU 96540–0051
Landholding Agency: Navy
Property Number: 77200020056
Status: Unutilized
Reason: Secured Area

Bldg. 4400
U.S. Naval Forces, Marianas
Waterfront Annex Co: GU 96540–0051
Landholding Agency: Navy
Property Number: 77200020057
Status: Unutilized
Reason: Secured Area, Extensive deterioration

Bldg. 4402
U.S. Naval Forces, Marianas
Waterfront Annex Co: GU 96540–0051
Landholding Agency: Navy
Property Number: 77200020058
Status: Unutilized
Reason: Secured Area

Bldg. 4414
U.S. Naval Forces, Marianas
Waterfront Annex Co: GU 96540–0051
Landholding Agency: Navy
Property Number: 77200020059
Status: Unutilized
Reason: Secured Area

Bldg. 4425
U.S. Naval Forces, Marianas
Waterfront Annex Co: GU 96540–0051
Landholding Agency: Navy
Property Number: 77200020060
Status: Unutilized
Reason: Secured Area

Bldgs. 4426, 4427, 4428
U.S. Naval Forces, Marianas
Waterfront Annex Co: GU 96540–0051
Landholding Agency: Navy
Property Number: 77200020061
Status: Unutilized
Reason: Secured Area

Illinois

Bldg. 381
Argonne National Lab
Argonne Co: DuPage IL 60439–
Landholding Agency: Energy
Property Number: 41200020005
Status: Unutilized
Reason: Extensive deterioration

Bldg. 384
Argonne National Lab
Argonne Co: DuPage IL 60439–
Landholding Agency: Energy
Property Number: 41200020006
Status: Unutilized
Reason: Extensive deterioration

Bldg. 480
Argonne National Lab
Argonne Co: DuPage IL 60439–
Landholding Agency: Energy
Property Number: 41200020007
Status: Unutilized
Reason: Extensive deterioration

Bldg. 486
Argonne National Lab
Argonne Co: DuPage IL 60439–
Landholding Agency: Energy
Property Number: 41200020008
Status: Unutilized
Reason: Extensive deterioration

Minnesota

Dwelling
Mississippi Hdqts Leech Lake Proj.
Federal Dam Co: Cass MN 56641–
Landholding Agency: COE
Property Number: 31200020002
Status: Unutilized
Reason: Extensive deterioration

Garage 1
Mississippi Hdqts Leech Lake Proj.
Federal Dam Co: Cass MN 56641–
Landholding Agency: COE
Property Number: 31200020003
Status: Unutilized
Reason: Extensive deterioration

Garage 2
Mississippi Hdqts Leech Lake Proj.
Federal Dam Co: Cass MN 56641–
Landholding Agency: COE
Property Number: 31200020004
Reason: Extensive deterioration

Nevada

6 Bldgs.
Dale Street Complex
300, 400, 500, 600, Block
Bldg, Valve House
Boulder City Co: NV 89005–
Landholding Agency: GSA
Property Number: 54200020017
Status: Excess
Reason: Extensive deterioration
GSA Number: LC–00–01–RP

New Mexico

Bldg. 16, TA–3
Los Alamos National Lab
Los Alamos Co: NM 87545–
Landholding Agency: Energy
Property Number: 41200020009
Status: Unutilized
Reason: Secured Area

Bldg. 339, TA–16
Los Alamos National Lab
Los Alamos Co: NM 87545–
Landholding Agency: Energy
Property Number: 41200020010
Status: Unutilized
Reason: Secured Area

Bldg. 340, TA–16
Los Alamos National Lab
Los Alamos Co: NM 87545–
Landholding Agency: Energy
Property Number: 41200020011
Status: Unutilized
Reason: Secured Area

Bldg. 341, TA–16
Los Alamos National Lab
Los Alamos Co: NM 87545–
Landholding Agency: Energy
Property Number: 41200020012
Status: Unutilized
Reason: Secured Area

Bldg. 342, TA–16
Los Alamos National Lab
Los Alamos Co: NM 87545–
Landholding Agency: Energy
Property Number: 41200020013
Status: Unutilized
Reason: Secured Area

Bldg. 343, TA–16
Los Alamos National Lab
Los Alamos Co: NM 87545–
Landholding Agency: Energy
Property Number: 41200020014
Status: Unutilized
Reason: Secured Area

Bldg. 345, TA–16
Los Alamos National Lab
Los Alamos Co: NM 87545–
Landholding Agency: Energy
Property Number: 41200020015
Status: Unutilized
Reason: Secured Area

Bldg. 16, TA–21
Los Alamos National Lab
Los Alamos Co: NM 87545–
Landholding Agency: Energy
Property Number: 41200020016
Status: Unutilized
Reason: Secured Area

Bldg. 48, TA–55
Los Alamos National Lab
Los Alamos Co: NM 87545–
Landholding Agency: Energy
Property Number: 41200020017
Status: Unutilized
Reason: Secured Area

Bldg. 125, TA–55
Los Alamos National Lab
Los Alamos Co: NM 87545–
Landholding Agency: Energy
Property Number: 41200020018
Status: Unutilized
Reason: Secured Area

Bldg. 162, TA–55

Los Alamos National Lab
Los Alamos Co: NM 87545–
Landholding Agency: Energy
Property Number: 41200020019
Status: Unutilized
Reason: Secured Area

New York

Bldg. AT–1
Knolls Atomic Power Lab
Niskayuna Co: Schenectady NY 12301–
Landholding Agency: Energy
Property Number: 41200020020
Status: Unutilized
Reason: Secured Area

South Carolina

Bldg. 49
Naval Public Works Center
Goose Creek Co: Berkeley SC 29445–
Landholding Agency: Navy
Property Number: 77200020062
Status: Unutilized
Reasons: Secured Area, Extensive deterioration

Virginia

Bldg. 145
Norfolk Naval Shipyard
Portsmouth Co: VA 23709–5000
Landholding Agency: Navy
Property Number: 77200020063
Status: Unutilized
Reasons: Secured Area, Extensive deterioration
Bldg. SP–76
Naval Station
Norfolk Co: VA 23511–
Landholding Agency: Navy
Property Number: 77200020078
Status: Unutilized
Reasons: Extensive deterioration

Pennsylvania

Tract No. B–212C
Upstream from Gen. Jadwin
Dam & Reservoir
Honesdale Co: Wayne PA 18431–
Landholding Agency: COE
Property Number: 31200020005
Status: Unutilized
Reason: Floodway

Tennessee

Tract D, 7 acres
Cheatham Lock & Dam
Nashville Co: Davidson TN 37207–
Landholding Agency: COE
Property Number: 31200020006
Status: Unutilized
Reason: Floodway

Virginia

0.4 acres
Naval Amphibious Base
Norfolk Co: VA 23521–3229
Landholding Agency: Navy
Property Number: 77200020079
Status: Unutilized
Comment: Secured Area

[FR Doc. 00–13041 Filed 5–25–00; 8:45 am]

BILLING CODE 4210–29–M

DEPARTMENT OF THE INTERIOR

Bureau of Land Management

[AK–932–1430–ET; A–062024]

Proposed Extension of Withdrawal and Opportunity for Public Meeting; Alaska

AGENCY: Bureau of Land Management, Interior.

ACTION: Notice.

SUMMARY: The Bureau of Land Management (BLM) proposes to extend the withdrawal for 730.13 acres of public land known as the Campbell Tract Administrative Site, for an additional 20 years. The land is withdrawn from all forms of appropriation under the public land laws by Public Land Order (PLO) No. 6127, until February 11, 2002. The purpose of the extension is to protect the existing Bureau of Land Management Campbell Tract Administrative Site. This Notice gives an opportunity to comment on the proposed action and to request a public meeting.

DATE: Comments and requests for a public meeting must be received by August 24, 2000.

ADDRESSES: Comments and meeting requests should be sent to the Alaska State Director, BLM Alaska State Office, 222 W. 7th Avenue, No. 13, Anchorage, Alaska 99513–7599.

FOR FURTHER INFORMATION CONTACT: Susan J. Lavin, BLM Alaska State Office, 907–271–5049.

SUPPLEMENTARY INFORMATION: On April 28, 2000, a petition was approved allowing the Bureau of Land Management to file an application to extend the PLO No. 6127 withdrawal for the Campbell Tract Administrative Site, as it affects the following described land, for an additional 20 years:

Seward Meridian

T. 12 N., R. 3 W.
Sec. 2, W½W½E½NW¼, W½NW¼, W½E½W½SW¼, W½W½SW¼;
Sec. 3, Lots 1 through 4, inclusive, S½N½NE¼NE¼, S½NE¼NE¼, S½SE¼NW¼NE¼, S½NE¼, SE¼SE¼NW¼, S½NE¼SE¼NW¼, S½SW¼SE¼NW¼, SW¼, E½SE¼;
Sec. 10, NE¼NE¼, E½NW¼NE¼, NW¼NW¼NE¼, N½SW¼NW¼NE¼, N½N½N½NW¼;
Sec. 11, NW¼NW¼NW¼, W½SW¼NW¼NW¼.

The area described contains 730.13 acres.

For a period of 90 days from the date of publication of this notice, all persons who wish to submit comments, suggestions, or objections in connection with the proposed withdrawal extension may present their views in writing to the Alaska State Director of the Bureau of Land Management.

Notice is hereby given that an opportunity for a public meeting is afforded in connection with the proposed extension. All interested persons who desire a public meeting for the purpose of being heard on the proposed withdrawal extension must submit a written request to the Alaska State Director within 90 days from the date of publication of this notice. If the authorized officer determines that a public meeting will be held, a notice of the time and place will be published in the **Federal Register**, at least 30 days before the scheduled date of the meeting.

This application will be processed in accordance with the regulations set forth in 43 CFR part 2300. The land will continue to be subject to the terms and conditions of PLO No. 6127, until February 11, 2002.

Dated: May 16, 2000.

Donald W. Baggs,

Lands and Minerals Group Supervisor, Division of Lands, Minerals, and Resources.

[FR Doc. 00–12884 Filed 5–25–00; 8:45 am]

BILLING CODE 4310–JA–P

DEPARTMENT OF THE INTERIOR

Bureau of Land Management

[NV–030–1610-DH]

Notice of Intent To Prepare an Amendment to the Lahontan Resource Management Plan for Resource Management of Withdrawn Lands at Naval Air Station Fallon, Nevada

AGENCY: Department of the Interior, Bureau of Land Management, Carson City Field Office in partnership with the Department of Defense, U.S. Naval Air Station Fallon, Nevada.

ACTION: Notice of Intent. The Bureau of Land Management (BLM) is proposing to amend the Lahontan Resource Management Plan (RMP) based on specific direction within Public Law 106–65, section 3014 (Military Lands Withdrawal Act of 1999). In addition, the BLM's amended RMP will be prepared with the Naval Air Station Fallon (Navy) to comply with Department of Defense requirements for an Integrated Natural Resource Management Plan in accordance with the Sikes Act Amendment Act (1997), Public Law 105–85.

SUMMARY: BLM and Navy have determined that the resource management plan process and

environmental assessment (EA) is the appropriate means to serve as the analysis and the basis for decisions on lands identified in the Military Lands Withdrawal Act of 1999 for public land management.

The following resource-related issues have been identified: (1) Off Highway Vehicle use; (2) public access (hunting, ranching, mining claims, etc.); (3) livestock grazing; (4) sage grouse habitat preservation; (5) Pony Express Trail protection; (6) wildfire prevention and suppression. The BLM and Navy are soliciting comments regarding issues and concerns the public may have.

EFFECTIVE DATES: Two public scoping meetings will be held in June 2000 to allow the public an opportunity to identify issues and concerns to be addressed in the RMP Amendment. Representatives from BLM and Navy will be available to answer questions about the Military Lands Withdrawal Act of 1999 and the RMP Amendment process. Comments will be accepted until June 30, 2000.

The scheduled public meetings are:

Fallon, NV (7:00–9:00 p.m.)—June 13, 2000, Fallon Convention Center, 100 Campus Way, Fallon, NV.

Reno, NV (7–9 p.m.)—June 15, 2000, BLM Nevada State Office, 1340 Financial Blvd., Reno, NV.

The proposed plan amendment schedule is as follows:

Begin Public Scoping: May 25, 2000.

Public Scoping Meetings: June 13 and 15, 2000.

Release Proposed Plan Amendment, EA and FONSI for Public Review, Governor's Consistency Review: November 30, 2000.

Issue Plan Amendment and Decision Record: May 1, 2000.

FOR FURTHER INFORMATION CONTACT: Scoping comments may be sent to: Field Manager, Bureau of Land Management, 5665 Morgan Mill Road, Carson City, NV 89701. ATTN: Navy Project Manager.

For additional information, write to the above address or call Terri Knutson (BLM Project Manager) at (775) 885–6156 or email tknutson@nv.blm.gov.

SUPPLEMENTARY INFORMATION: In 1998 the Navy completed an environmental impact statement (EIS) to analyze the proposed withdrawal of public lands to provide safety and training buffers around three established training ranges in Churchill County, Nevada. The Findings and Recommendations resulting from the EIS were transmitted to Congress and in October 1999 the Military Lands Withdrawal Act of 1999, Public Law 106–65 was passed and signed by the President. The Act specifies several actions to be taken by the BLM and Navy prior to October 2001, including development of a plan for management of each area withdrawn for protection of the resources and values. Federal, state, and local agencies, Tribal entities, and other individuals or organizations who may be interested in or affected by the decisions to be made in this plan amendment are invited to participate in the scoping process and may request, or be requested by the BLM and Navy, to participate as a cooperating agency.

Dated: May 15, 2000.

John O. Singlaub,

Manager, Carson City Field Office.

[FR Doc. 00–13164 Filed 5–25–00; 8:45 am]

BILLING CODE 4310–HC–U

INTERNATIONAL TRADE COMMISSION

[Inv. No. 337–TA–434]

Notice of Investigation

In the Matter of: Certain Magnetic Resonance Injection Systems and Components Thereof.

AGENCY: International Trade Commission.

ACTION: Institution of investigation pursuant to 19 U.S.C. 1337.

SUMMARY: Notice is hereby given that a complaint was filed with the U.S. International Trade Commission on April 25, 2000, and supplemented on May 10, 2000 and May 17, 2000, under section 337 of the Tariff Act of 1930, as amended, 19 U.S.C. 1337, on behalf of Medrad, Inc., One Medrad Drive, Indianola, Pennsylvania 15051–0780. The complaint alleges violations of section 337 in the importation into the United States, the sale for importation, and the sale within the United States after importation of certain magnetic resonance injection systems, components thereof, and molds therefor by reason of infringement of claims 8–9, 22, 25–28, 30–31, and 33–39 of U.S. Letters Patent Re. 36,648. The complaint further alleges that there exists an industry in the United States as required by subsection (a)(2) of section 337.

The complainant requests that the Commission institute an investigation and, after a hearing, issue a permanent exclusion order and permanent cease and desist orders.

ADDRESSES: The complaint, except for any confidential information contained therein, is available for inspection during official business hours (8:45 a.m. to 5:15 p.m.) in the Office of the Secretary, U.S. International Trade Commission, 500 E Street, SW., Room 112, Washington, DC 20436, telephone 202–205–2000. Hearing-impaired individuals are advised that information on this matter can be obtained by contacting the Commission's TDD terminal on 202–205–1810. Persons with mobility impairments who will need special assistance in gaining access to the Commission should contact the Office of the Secretary at 202–205–2000.

FOR FURTHER INFORMATION CONTACT: Jeffrey R. Whieldon, Esq., Office of Unfair Import Investigations, U.S. International Trade Commission, telephone 202–205–2580. General information concerning the Commission may also be obtained by accessing its internet server (http://www.usitc.gov).

Authority: The authority for institution of this investigation is contained in section 337 of the Tariff Act of 1930, as amended, and in § 210.10 of the Commission's rules of practice and procedure, 19 CFR 210.10 (1999).

SCOPE OF INVESTIGATION: Having considered the complaint, the U.S. International Trade Commission, on May 19, 2000, ordered that:

(1) Pursuant to subsection (b) of section 337 of the Tariff Act of 1930, as amended, an investigation be instituted to determine whether there is a violation of subsection (a)(1)(B) of section 337 in the importation into the United States, the sale for importation, or the sale within the United States after importation of certain magnetic resonance injection systems and components thereof by reason of infringement of claims 8–9, 22, 25–28, 30–31, or 33–39 of U.S. Letters Patent Re. 36,648, and whether there exists an industry in the United States as required by subsection (a)(2) of section 337.

(2) For the purpose of the investigation so instituted, the following are hereby named as parties upon which this notice of investigation shall be served:

(a) The complainant is: Medrad, Inc., One Medrad Drive, Indianola, Pennsylvania 15051–0780.

(b) The respondents are the following companies alleged to be in violation of section 337, and are the parties upon which the complaint is to be served:

Nemoto Kyorindo Co., Ltd., 3–26–4 Hongo Bunkyou-ku, Tokyo, Japan.

Liebel-Flarsheim Co., 2111 E. Galbraith Road, Cincinnati, OH 45215–6305

Mallinckrodt Inc., (New York corporation), 675 McDonnell Boulevard, Hazelwood, MO 63042.

Mallinckrodt Inc., (Delaware corporation), 675 McDonnell Boulevard, Hazelwood, MO 63042.

(c) Jeffrey R. Whieldon, Esq., Office of Unfair Import Investigations, U.S. International Trade Commission, 500 E Street, SW., Room 401–H, Washington, DC 20436, who shall be the Commission investigative attorney, party to this investigation; and

(3) For the investigation so instituted, the Honorable Paul J. Luckern is designated as the presiding administrative law judge.

Responses to the complaint and the notice of investigation must be submitted by the named respondents in accordance with § 210.13 of the Commission's Rules of Practice and Procedure, 19 CFR 210.13. Pursuant to 19 CFR 201.16(d) and 210.13(a) of the Commission's rules, such responses will be considered by the Commission if received not later than 20 days after the date of service by the Commission of the complaint and the notice of investigation. Extensions of time for submitting responses to the complaint will not be granted unless good cause therefor is shown.

Failure of a respondent to file a timely response to each allegation in the complaint and in this notice may be deemed to constitute a waiver of the right to appear and contest the allegations of the complaint and this notice, and to authorize the administrative law judge and the Commission, without further notice to the respondent, to find the facts to be as alleged in the complaint and this notice and to enter both an initial determination and a final determination containing such findings, and may result in the issuance of a limited exclusion order or a cease and desist order or both directed against such respondent.

Issued: May 22, 2000.

By order of the Commission.

Donna R. Koehnke,

Secretary.

[FR Doc. 00–13269 Filed 5–25–00; 8:45 am]

BILLING CODE 7020–02–P

INTERNATIONAL TRADE COMMISSION

[Investigation No. 731–TA–856 (Final)]

Certain Ammonium Nitrate From Russia

AGENCY: International Trade Commission.

ACTION: Cancellation of hearing, posthearing briefs, and final comments.

SUMMARY: On May 19, 2000, the Department of Commerce informed the Commission that a suspension agreement had been signed in the subject investigation. Accordingly, the Commission hereby cancels the hearing on the investigation currently scheduled for May 25, 2000, the posthearing briefs currently due on June 1, 2000, and the final comments currently due on June 22, 2000. The Commission unanimously determined that no earlier announcement of this cancellation was possible.

EFFECTIVE DATE: May 22, 2000.

FOR FURTHER INFORMATION CONTACT: Karen Taylor (202–708–4101), Office of Investigations, U.S. International Trade Commission, 500 E Street SW, Washington, DC 20436. Hearing-impaired individuals are advised that information on this matter can be obtained by contacting the Commission's TDD terminal on 202–205–1810. Persons with mobility impairments who will need special assistance in gaining access to the Commission should contact the Office of the Secretary at 202–205–2000. General information concerning the Commission may also be obtained by accessing its internet server (http://www.usitc.gov).

Authority: This investigation is being conducted under authority of title VII of the Tariff Act of 1930; this notice is published pursuant to section 207.21 of the Commission's rules (19 CFR § 207.21).

Issued: May 22, 2000.

By order of the Commission.

Donna R. Koehnke,

Secretary.

[FR Doc. 00–13267 Filed 5–25–00; 8:45 am]

BILLING CODE 7020–02–P

INTERNATIONAL TRADE COMMISSION

[Investigations Nos. 701–TA–318 (Review) and 731–TA–538 and 561 (Review)]

Sulfanilic Acid From China and India

Determinations

On the basis of the record [1] developed in the subject five-year reviews, the United States International Trade Commission determines, pursuant to section 751(c) of the Tariff Act of 1930 (19 U.S.C. § 1675(c)), that revocation of the countervailing duty and antidumping duty orders on sulfanilic acid from China and India would be likely to lead to continuation or recurrence of material injury to an industry in the United States within a reasonably foreseeable time.

Background

The Commission instituted these reviews on October 1, 1999 (64 FR 53412, October 1, 1999) and determined on January 7, 2000 that it would conduct expedited reviews (65 FR 2645, January 18, 2000). The Commission transmitted its determinations in these reviews to the Secretary of Commerce on May 18, 2000. The views of the Commission are contained in USITC Publication 3301 (May 2000), entitled Sulfanilic Acid From China and India: Investigations Nos. 701–TA–318 (Review) and 731–TA–538 and 561 (Review).

Issued: May 22, 2000.

By order of the Commission.

Donna R. Koehnke,

Secretary.

[FR Doc. 00–13268 Filed 5–25–00; 8:45 am]

BILLING CODE 7020–02–P

[1] The record is defined in sec. 207.2(f) of the Commission's Rules of Practice and Procedure (19 CFR § 207.2(f)).

DEPARTMENT OF JUSTICE

Federal Bureau of Investigation

Agency Information Collection Activities; Current Collection; Comments Requests

AGENCY: Federal Bureau of Investigation, Department of Justice.

ACTION: Notice of Information Collection Under Review; Extension of a Currently Approved Collection: Hate Crime Incident Report and Quarterly Hate Crime Report

The proposed information collection is published to obtain comments from the public and affected agencies. Comments are encouraged and will be accepted until July 25, 2000.

Request written comments and suggestions from the public and affected agencies concerning the proposed collection of information. Comments should address one or more of the following four points:

(1) Evaluate whether the proposed collection of information is necessary for the proper performance of the functions of the agency, including whether the information will have practical utility;

(2) Evaluate the accuracy of the agency estimate of the burden of the proposed collection of information, including the validity of the methodology and assumptions used;

(3) Enhance the quality, utility, and clarity of the information to be collected; and

(4) Minimize the burden of the collection of information on those who are to respond, including through the use of appropriate automated, electronic, mechanical, or other technological collection techniques of other forms of information technology, e.g., permitting electronic submission of responses.

Comments and/or suggestions regarding the item(s) contained in this notice, especially regarding the estimated public burden and associated response time should be directed to Gregory E. Scarbro (phone number and address listed below). Additional information as well as copies of the proposed information collection instrument with instructions are available by contacting Gregory E. Scarbro, Unit Chief, telephone 304–625–4830, FBI, CJIS Division, Statistical Unit, E–3, 1000 Custer Hollow Road, Clarksburg, WV 26306.

Overview of this information collection:

(1) Type of information collection: Extension of Current Collection.

(2) The title of the form/collection: Hate Crime Incident Report and Quarterly Hate Crime Report.

(3) The agency form number, if any, and applicable component of the Department Sponsoring the collection. Form: 11–1; 11–2. Federal Bureau of Investigation, Department of Justice.

(4) Affected public who will be asked or required to respond, as well as brief abstract. Primary: Local and State Law Enforcement Agencies. These reports will gather information necessary to monitor the bias motivation of selected criminal offenses. The resulting data are published annually.

(5) The FBI UCR Program is currently reviewing its race and ethnicity data collection in compliance with the Office of Management and Budget's *Revisions for the Standards for the Classification of Federal Data on Race and Ethnicity.*

(6) An estimate of the total number of respondents and the amount of time estimated for an average respondent to respond: 17,667 agencies with 106,002 responses (including zero reports); and with an average of 6 hours and 35 minutes annually devoted to compilation of data for this information collection.

(7) An estimate of the total public burden (in hours) associated with both collections: 15,900 hours annually.

If additional information is required contact: Mr. Robert B. Briggs, Clearance Officer, United States Department of Justice, Information Management and Security Staff, Justice Management Division, Suite 850, Washington Center, 1001 G Street, NW., Washington, DC 20530.

Dated: May 23, 2000.

Robert B. Briggs,

Department Clearance Officer, United States Department of Justice.

[FR Doc. 00–13307 Filed 5–25–00; 8:45 am]

BILLING CODE 4410–22–M

DEPARTMENT OF LABOR

Employment Standards Administration, Wage and Hour Division

Minimum Wages for Federal and Federally Assisted Construction; General Wage Determination Decisions

General wage determination decisions of the Secretary of Labor are issued in accordance with applicable law and are based on the information obtained by the Department of Labor from its study of local wage conditions and data made available from other sources. They specify the basic hourly wage rates and fringe benefits which are determined to be prevailing for the described classes of laborers and mechanics employed on construction projects of a similar character and in the localities specified therein.

The determinations in these decisions of prevailing rates and fringe benefits have been made in accordance with 29 CFR Part 1, by authority of the Secretary of Labor pursuant to the provisions of the Davis-Bacon Act of March 3, 1931, as amended (46 Stat. 1494, as amended, 40 U.S.C 276a) and of other Federal statutes referred to in 29 CFR Part 1, Appendix, as well as such additional statutes as may from time to time be enacted containing provisions for the payment of wages determined to be prevailing by the Secretary of Labor in accordance with the Davis-Bacon Act. The prevailing rates and fringe benefits determined in these decisions shall, in accordance with the provisions of the foregoing statutes, constitute the minimum wages payable on Federal and federally assisted construction projects to laborers an mechanics of the specified classes engaged on contract work of the character and in the localities described therein.

Good cause is hereby found for not utilizing notice and public comment procedure thereon prior to the issuance of these determinations as prescribed in 5 U.S.C. 553 and not providing for delay in the effective date as prescribed in that section, because the necessity to issue current construction industry wage determinations frequently and in large volume causes procedures to be impractical and contrary to the public interest.

General wage determination decisions, and modifications and supersedes decisions thereto, contain no expiration dates and are effective from their date of notice in the **Federal Register,** or on the date written notice is received by the agency, whichever is earlier. These decisions are to be used in accordance with the provisions of 29 CFR 29 Parts 1 and 5. Accordingly, the applicable decision, together with any modifications issued, must be made a part every contract for performance of the described work within the geographic area indicated as required by an applicable Federal prevailing wage law and 29 CFR part 5. The wage rates and fringe benefits, notice of which is published herein, and which are contained in the Government Printing Office (GPO) document entitled ''General Wage Determinations Issued Under The Davis-Bacon And Related Acts,'' shall be the minimum paid by contractors and subcontractors to laborers and mechanics.

Any person, organization, or governmental agency having an interest in the rates determined as prevailing is encouraged to submit wage rate and fringe benefit information for consideration by the Department. Further information and self-explanatory forms for the purpose of submitting this data may be obtained by writing to the U.S. Department of Labor, Employment Standards Administration, Wage and Hour Division, Division of Wage Determinations, 200 Constitution Avenue, N.W., room S–3014, Washington, DC 20210.

Modifications to General Wage Determination Decisions

The number of decisions listed in the Government Printing Office document entitled ''General Wage Determinations Issued Under the Davis-Bacon and related Acts'' being modified are listed by Volume and State. Dates of publication in the **Federal Register** are in parentheses following the decisions being modified.

Volume I

None.

Volume II

Pennsylvania
PA000003 (Feb. 11, 2000)
PA000006 (Feb. 11, 2000)
PA000014 (Feb. 11, 2000)

Volume III

Florida
FL0000028 (Feb. 11, 2000)
South Carolina
SC000003 (Feb. 11, 2000)

Volume IV

Ohio
OH000004 (Feb. 11, 2000)

Volume V

Iowa
IA000002 (Feb. 11, 2000)
IA000003 (Feb. 11, 2000)
IA000004 (Feb. 11, 2000)
IA000005 (Feb. 11, 2000)
IA000006 (Feb. 11, 2000)
IA000010 (Feb. 11, 2000)
IA000013 (Feb. 11, 2000)
IA000014 (Feb. 11, 2000)
IA000015 (Feb. 11, 2000)
IA000016 (Feb. 11, 2000)
IA000018 (Feb. 11, 2000)
IA000019 (Feb. 11, 2000)
IA000024 (Feb. 11, 2000)
IA000029 (Feb. 11, 2000)
IA000032 (Feb. 11, 2000)
IA000045 (Feb. 11, 2000)
IA000046 (Feb. 11, 2000)
IA000047 (Feb. 11, 2000)
IA000067 (Feb. 11, 2000)
IA000070 (Feb. 11, 2000)
IA000071 (Feb. 11, 2000)
IA000072 (Feb. 11, 2000)
IA000078 (Feb. 11, 2000)
IA000079 (Feb. 11, 2000)
IA000080 (Feb. 11, 2000)

Kansas
KS000013 (Feb. 11, 2000)
KS000022 (Feb. 11, 2000)
KS000069 (Feb. 11, 2000)
KS000070 (Feb. 11, 2000)

Volume VI

South Dakota
SD000011 (Feb. 11, 2000)

Washington
WA000003 (Feb. 11, 2000)
WA000008 (Feb. 11, 2000)

Volume VII

None

General Wage Determination Publication

General wage determinations issued under the Davis-Bacon and related Acts, including those noted above, may be found in the Government Printing Office (GPO) document entitled ''General Wage Determinations Issued Under The Davis-Bacon and Related Acts.'' This publication is available at each of the 50 Regional Government Depository Libraries and many of the 1,400 Government Depository Libraries across the country.

The general wage determinations issued under the Davis-Bacon and related Acts are available electronically by subscription to the FedWorld Bulletin Board System of the National Technical Information Service (NTIS) of the U.S. Department of Commerce at 1–800–363–2068.

Hard-copy subscriptions may be purchased from: Superintendent of Documents, U.S. Government Printing Office, Washington, D.C. 20402, (202) 512 1800.

When ordering hard-copy subscription(s), be sure to specify the State(s) of interest, since subscriptions may be ordered for any or all of the seven separate volumes, arranged by State. Subscriptions include an annual edition (issued in January or February) which includes all current general wage determinations for the States covered by each volume. Throughout the remainder of the year, regular weekly updates are distributed to subscribers.

Signed at Washington, D.C. This 18th Day of May 2000.

Carl J. Poleskey,

Chief, Branch of Construction Wage Determinations.

[FR Doc. 00–13048 Filed 5–25–00; 8:45 am]

BILLING CODE 4510–27–M

DEPARTMENT OF LABOR

Bureau of Labor Statistics

Federal Economic Statistics Advisory Committee; Appointment of Members

This is to announce the appointment of members to the Federal Economic Statistics Advisory Committee (FESAC), established under the provisions of the Federal Advisory Committee Act, as amended (Public Law 92–463; 5 U.S.C. App. 2, 6(c)). The membership of the Committee is as follows:

Professor Ernst R. Berndt, Chair, Massachusetts Institute of Technology
Dr. Barry P. Bosworth, Brookings Institution
Professor Franklin M. Fisher, Massachusetts Institute of Technology
Professor John C. Haltiwanger, University of Maryland
Dr. Sallie Keller-McNulty, Los Alamos National Laboratory
Professor Alan B. Krueger, Princeton University
Dr. Judith T. Lessler, Research Triangle Institute
Professor Lisa M. Lynch, Tufts University
Professor Joseph Sedransk, Case Western Reserve University
Professor Matthew D. Shapiro , University of Michigan
Professor John B. Taylor, Stanford University
Professor Kirk M. Wolter, University of Chicago

The Committee will present advice and make recommendations to the Department of Labor, Bureau of Labor Statistics and the Department of Commerce, Bureau of Economic Analysis and Bureau of the Census (the Agencies) from the perspective of the professional economics and statistics communities. The Committee is a technical committee composed of economists, statisticians, and behavioral scientists who are recognized for their attainments and objectivity in their respective fields. Committee members will be called upon to analyze the issues involved in producing Federal economic statistics and recommend practices that will lead to optimum efficiency, effectiveness, and cooperation among the Agencies. These initial appointments are for one-, two- or three-year terms, to provide staggered three-year terms overall. Professor Ernst R. Berndt will serve as Committee Chairperson.

Signed at Washington, DC this 19th day of May 2000.

Katharine G. Abraham,

Commissioner of Labor Statistics.

[FR Doc. 00–13249 Filed 5–25–00; 8:45 am]

BILLING CODE 4510–24–P

DEPARTMENT OF LABOR

Bureau of Labor Statistics

Federal Economic Statistics Advisory Committee; Notice of Open Meeting and Agenda

The initial meeting of the Federal Economic Statistics Advisory Committee will be held on June 15, 2000 in the Postal Square Building, 2 Massachusetts Avenue N.E., Washington, DC.

The Federal Economic Statistics Advisory Committee is a technical committee composed of economists, statisticians, and behavioral scientists who are recognized for their attainments and objectivity in their respective fields. Committee members will be called upon to analyze issues involved in producing Federal economic statistics and recommend practices that will lead to optimum efficiency, effectiveness, and cooperation among the Department of Labor, Bureau of Labor Statistics and the Department of Commerce, Bureau of Economic Analysis and Bureau of the Census.

The meeting will be held in Meeting Rooms 1 and 2 of the Postal Square Building Conference Center. The schedule and agenda for the meeting are as follows:

9:00 Opening Session
1. Purpose of the Committee
2. Introduction of members and statements of their research interests
3. Committee operating procedures

10:15 The Measurement of E-commerce
1:00 Service Sector Measurement: The Case of Banking
2:45 Bureau of the Census and Bureau of Labor Statistics Establishment Lists
3:45 Ethics, Rules and Regulations

4:15 Future Agenda Topics
5:00 Conclude (approximate time)

The meeting is open to the public. It is suggested that persons planning to attend the meeting as observers contact Margaret Johnson, Federal Economic Research Advisory Committee, on Area Code (202) 691–5600. Persons needing special assistance such as sign language interpretation or other special accommodation in order to attend the meeting are asked to contact Ms. Johnson at least two days prior to the meeting date.

Signed at Washington, D.C. the 19th day of May 2000.

Katharine G. Abraham,

Commissioner of Labor Statistics.

[FR Doc. 00–13248 Filed 5–25–00; 8:45 am]

BILLING CODE 4510–24–P

DEPARTMENT OF RAILROAD RETIREMENT BOARD

Proposed Collection; Comment Request

SUMMARY: In accordance with the requirement of Section 3506 (c)(2)(A) of the Paperwork Reduction Act of 1995 which provides opportunity for public comment on new or revised data collections, the Railroad Retirement Board (RRB) publishes periodic summaries of proposed data collections.

Comments are invited on: (a) Whether the proposed information collection is necessary for the proper performance of the functions of the agency, including whether the information has practical utility; (b) the accuracy of the RRB's estimate of the burden of the collection of the information; (c) ways to enhance the quality, utility, and clarity of the information to be collected; and (d) ways to minimize the burden related to the collection of information on respondents, including the use of automated collection techniques or other forms of information technology.

Title and Purpose of Information Collection

Lag Service Reports; OMB 3220–0005.

Under Section 9 of the Railroad Retirement Act (RRA) and Section 6 of the Railroad Unemployment Insurance Act (RUIA), railroad employers are required to submit reports of employee service and compensation to the RRB as needed for administering the RRA and RUIA. To pay benefits due on a deceased employee's earnings records or determine entitlement to, and amount of annuity applied for, it is necessary at time to obtain from railroad employers current (lag) service and compensation net yet reported to the RRB through the annual reporting process.

The reporting requirements are specified in 20 CFR 209.4 and 209.5. The RRB currently utilizes Form G–88, Employer's Supplemental Report of Service and Compensation, and Form AA–22, Notice of Death and Compensation, to obtain the required lag service and related information from railroad employers. The RRB proposes to obsolete Form G–88a. Form G–88a will be replaced by two forms, Form G–88a.1, Notice of Retirement of Verification of Date Last Worked, and Form G–88a.2, Notice of Retirement and Request for Service Needed for Eligibility. Form G–88a.1 will be sent by the RRB to railroad employers and used for the specific purpose of verifying information previously provided to the RRB regarding the date last worked by the employee. If the information is correct, the employer need not reply. If the information is incorrect, the employer is asked to provide corrected information. Form G–88a.2 will be used by the RRB to secure lag service and compensation information when it is needed to determine benefit eligibility. Both proposed forms will direct the railroad employers to fax the information directly to the RRB. It is expected that the proposed new forms will be easier for railroad employers to complete and will encourage a speedier reply, allowing the RRB to pay applicants in a more timely and accurate manner. A minor editorial change is proposed to Form AA–12.

The completion time for proposed forms G–88a.1 and G–88a.2 is estimated at 5 minutes per response. The estimated completion time for Form AA–22 remains at 6½ minutes per response. Completion is mandatory. The RRB estimates that approximately 800 Form AA–12's 2,300 Form G–88a.1's, and 1,200 G–88a.2's will be completed annually.

The renewal of this information collection will continue the RRB's initiative to consolidate information collections by major functional areas. The purpose of the initiative is to bring related collection instruments together in one collection, better manage the instruments, and prepare for the electronic collection of this information (A collection instrument can be an individual form, electronic collection, interview, or any other method that collects specific information from the public.)

As part of the OMB renewal process, the RRB proposes that this collection (OMB 3220–0005), Lag Service Reports, will be renamed Employer Reporting. Upon approval by OMB, and RRB intends to merge the following OMB approved collections into the collection by the Expected Expiration Date.

OMB collection No.	Collection title	RRB forms	Expected expiration date
3220–0008	Railroad Service and Compensation Reports	BA 3a, BA–4	9/30/2001
3220–0012	Employers Quarterly Report of Contributions Under the RUIA	DC–1	2/28/2003
3220–0014	Employer Representatives' Status and Compensation Reports	DC–2, DC–2a	6/30/2003
3220–0070	Employer Service and Compensation Reports	UI–41, UI–41a	9/30/2001
3220–0089	Pension Plan Reports	G–88p, G–88r, G–88r.1.	11/30/2002
3220–0097	Pay Rate Report	UI–1e	9/30/2001
3220–0132	Gross Earnings Report	BA–11	1/31/2003
3220–0156	Employers Deemed Service Month Questionnaire	GL–99	6/30/2003
3220–0173	Railroad Separation Allowance or Severance Pay Report	BA–9	4/30/2002
3220–0175	Sick Pay and Miscellaneous Payments Report	BA–10	9/30/2001
3220-0194	Employee Home Address Report	BA–6a	3/31/2001

Revisions to existing collection instruments and, occasionally, a new instrument related to this program function may be required during the three-year cycle of this information collection.

The RRB currently estimates the completion time for manual Form BA–3a, Annual Report of Creditable

Compensation at 85 hours, the electronic version of Form BA–3a at 33.3 hours, Form BA–4, Report of Creditable Compensation Adjustments at 1 hour, Form DC–1, Employer's Quarterly Report of Contributions Under the RUIA at 25 minutes, Form DC–2a, Employee Representative's Report of Compensation at 15 minutes, Form UI–41, Supplemental Report of Service and Compensation at 8 minutes, Form UI–41a, Supplemental Report of Compensation at 8 minutes, Form G–88p, Employer's Supplemental Pension Report, at 8 minutes, G–88r, Request for Information About New or Revised Employer Pension Plan at 10 minutes, G–88r.1, Request for Additional Information About Employer Pension Plan in Case of Change of Employer Status or Termination of Plan at 10 minutes, Form UI–1E, Pay Report Information at 5 minutes, Manual Form BA–11, Report of Gross Earnings at 15 to 30 minutes, the electronic version of Form BA–11 at 5 hours, Form GL–99, Employer's Deemed Service Months Questionnaire at 2 minutes, Form BA–9, Report of Separation Allowance or Severance Pay at 75 minutes, Form BA–10, Report of Miscellaneous Compensation and Sick Pay at 55 minutes, and Form BA–6a, Employer Home Address Report at 30 minutes. Completion of each of the above forms is mandatory.

After the last information collection is merged and other necessary adjustments are made, the resultant information collection is expected to total approximately 55,400 annual burden hours. A justification for each action described above (merge collection, revised collection instrument, new collection instrument) will be provided to OMB with a correction Change Worksheet (OMB Form 83–C) at the time the action occurs. With the next renewal of this collection, the RRB will update the information collection package to account for the consolidation and other interim adjustments.

Additional Information or Comments

To request more information or to obtain a copy of the information collection justification, forms, and/or supporting material, please call the RRB Clearance Officer at (312) 751–3363. Comments regarding the information collection should be addressed to Ronald J. Hodapp, Railroad Retirement Board, 844 North Rush Street, Chicago, Illinois 60611–2092. Written comments should be received within 60 days of this notice.

Chuck Mierzwa,

Clearnace Officer.

[FR Doc. 00–13215 Filed 5–25–00; 8:45am]

BILLING CODE 7905–01–M

SECURITIES AND EXCHANGE COMMISSION

[Release No. 35–27178]

Filings Under the Public Utility Holding Company Act of 1935, as amended (''Act'')

May 19, 2000.

Notice is hereby given that the following filing(s) has/have been made with the Commission pursuant to provisions of the Act and rules promulgated under the Act. All interested persons are referred to the application(s) and/or declarations(s) for complete statements of the proposed transaction(s) summarized below. The application(s) and/or declaration(s) and any amendment(s) is/are available for public inspection through the Commission's Branch of Public Reference.

Interested persons wishing to comment or request a hearing on the application(s) and/or declaration(s) should submit their views in writing by June 13, 2000, to the Secretary, Securities and Exchange Commission, Washington, D.C. 20549–0609, and serve a copy on the relevant applicant and/or declarant(s) at the address(es) specified below. Proof of service (by affidavit or, in the case of an attorney at law, by certificate) should be filed with the request. Any request for hearing should identify specifically the issues of facts or law that are disputed. A person who so requests will be notified of any hearing, if ordered, and will receive a copy of any notice or order issued in the matter. After June 13, 2000 the application(s) and/or declaration(s) as filed or as amended, may be granted and/or permitted to become effective.

Southern Co. et al. (70–8733)

The Southern Company, a registered public utility holding company, located at 270 Peachtree Street, N.W., Atlanta, Georgia, Southern Energy, Inc. (''SEI''), a nonutility subsidiary company, and Southern Energy Resources, Inc., a nonutility subsidiary company of SEI, both located at 900 Ashwood Parkway, Suite 500, Atlanta, Georgia 30338, have filed a post-effective amendment under section 12(c) of the Act and rules 46 and 54 under the Act.

By supplemental orders dated July 17, 1996 and July 2, 1997 (HCAR Nos. 26543 and 26738, respectively), the Commission authorized SEI and its current and future subsidiaries to pay dividends to their parent companies with respect to the securities of such companies through June 30, 2000, out of capital or unearned surplus (including revaluation reserve). In both orders the Commission reserved jurisdiction over payment of dividends out of capital or unearned surplus by any current or future subsidiary company of SEI that derived any material part of its revenues from the sale of goods, services, electricity or natural gas to any of Southern's five domestic electric utility subsidiaries or to Southern Company Services, Inc.

SEI and its current and future subsidiaries now propose to extend the time during which they may declare and pay dividends to their parent companies with respect to the securities of such companies, from time to time through June 30, 2002, out of capital or unearned surplus. The Commission will continue to reserve jurisdiction over the payment of dividends out of capital or unearned surplus by any current or future subsidary company of SEI that derived any material part of its revenues from the sale of goods, services, electricity or natural gas to any of Southern's five domestic electric utility subsidiaries or to Southern Company Services, Inc. The application cites the need to efficiently manage the unrestricted cash of SEI and its intermediate and special purpose subsidiaries as the main reason for extending the time to declare and issue dividends.

For the Commission by the Division of Investment Management, under delegated authority.

Jonathan G. Katz,

Secretary.

[FR Doc. 00–13233 Filed 5–25–00; 8:45 am]

BILLING CODE 8010–01–M

SECURITIES AND EXCHANGE COMMISSION

[Release No. 34–42803; File No. SR–Amex–00–04]

Self-Regulatory Organizations; Notice of Filing of Proposed Rule Change by the American Stock Exchange LLC Adopting a Peer Review Requirement for Auditors of Listed Companies

May 22, 2000.

Pursuant to Section 19(b)(1) of the Securities Exchange Act of 1934

(''Act'')[1] and Rule 19b–4 thereunder,[2] notice is hereby given that on February 14, 2000, the American Stock Exchange LLC (''Amex'' or ''Exchange'') filed with the Securities and Exchange Commission (''Commission'') the proposed rule change as described in Items, I, II, and III below, which Items have been prepared by the Amex. The Commission is publishing this notice to solicit comments on the proposed rule change from interested persons.

I. Self-Regulatory Organization's Statement of the Terms of Substance of the Proposed Rule Change

The Exchange proposes to amend the *Amex Company Guide* to adopt a peer review requirement for auditors of listed companies. The text of the proposed rule change is as follows (all text is proposed to be added):

Sec. 605. Peer Review

(a) A listed company must be audited by an independent public accountant that: (i) Has received an external quality control review by an independent public accountant (''peer review'') that determines whether the auditors' system of quality control is in place and operating effectively and whether established policies and procedures and applicable auditing standards are being followed; or

(ii) Is enrolled in a peer review program and within 18 months receives a peer review that meets acceptable guidelines.

(b) The following guidelines are acceptable for the purposes of Sec. 605: (i) The peer review should be comparable to AICPA standards included in Standards for Performing on Peer Reviews, codified in the AICPA's SEC Practice Section Reference Manual;

(ii) The peer review program should be subject to oversight by an independent body comparable to the organizational structure of the Public Oversight Board as codified in the AICPA's SEC Practice Section Reference Manual; and

(iii) The administering entity and the independent oversight body of the peer review program must, as part of their rules of procedure, require the retention of the peer review working papers for 90 days after acceptance of the peer review report and allow the Exchange access to those working papers.

[1] 15 U.S.C. 78s(b)(1).

[2] 17 CFR 240.19b–4.

II. Self-Regulatory Organization's Statement of the Purpose of, and Statutory Basis for, the Proposed Rule Change

In its filing with the Commission, the Amex included statements concerning the purpose of, and bais for, the proposed rule change and discussed any comments it received on the proposed rule change. The text of these statements may be examined at the places specified in Item IV below. The Amex has prepared summaries, set forth in sections A, B, and C below, of the most significant aspects of such statements.

A. Self-Regulatory Organization's Statement of the Purpose of, and Statutory Basis for, the Proposed Rule Change

1. Purpose

The Exchange believes that auditors of listed companies should be subject to a practice monitoring program under which their auditor's quality control system is reviewed by an independent peer auditor on a periodic basis.[3] The Nasdaq Stock Market and certain banking agencies such as the Federal Deposit Insurance Corporation (''FDIC'') have implemented a peer review requirement. In addition, the Commission has generally expressed support for the concept of peer review.[4] Although it withdrew its mandatory peer review proposal, the Commission nonetheless confirmed its belief that ''the peer review process contributes significantly to improving the quality control systems of accounting firms auditing Commission registrants and enhances the consistency and quality of practice before the Commission.''[5]

The proposed rule would require all independent public accountants auditing Exchange listed companies to have received, or be enrolled in, peer review that meets acceptable guidelines. Acceptable guidelines would include comparabiity to standards of the American Institute of Certified Public Accountants (''AICPA'') included in the Standards for Performing on Peer Reviews codified in the AICPA's SEC Practice Section Reference Manuel, and oversight of the peer review program by an independent body comparable to the organizational structure of the Public Oversight Board as codified in the AICPA's SEC Practice Section Reference Manuel. Further, copies of peer review reports, accompanied by any letters of comment and letters of response, would be maintained by the administering entity of the peer review program and be made available to the Exchange upon request.[6] Similarly, working papers of the administrating entity and the independent oversight body would also be required to be retained for 90 days after the report is filed, and be made available to the Exchange upon request.

2. *Statutory Basis*

The Exchange believes that the proposed rule change is consistent with Section 6(b)(5)[7] of the Act, which requires, among other things, the Exchange's rules to be designed to prevent fraudulent and manipulative acts and practices, to promote just and equitable principles of trade, and, in general, to protect investors and the public interest. Specifically, the peer review requirement for auditors of Exchange listed issuers will provide safeguards for investors by ensuring that an auditing firm's quality control systems are subjec to an industry-accetped level of review.

B. Self-Regulatory Organization's Statement on Burden on Competition

The Exchange does not believe that the proposed rule change will result in any burden on competition that is not necessary or appropriate in furtherance of the purposes of the Act.

C. Self-Regulatory Organization's Statement on Comments on the Proposed Rule Change Received From Members, Participants, or Others

The Exchange did not solicit or receive written comments on the proposed rule change.

III. Date of Effectiveness of the Proposed Rule Change and Timing for Commission Action

Within 35 days of the date of publication of this notice in the **Federal Register** or within such longer period (i) as the Commission may designate up to 90 days of such date if it finds such longer period to be appropriate and publishes its reasons for so finding or

[3] After the initial peer review required by proposed Section 605(a), independent auditors of listed companies would be required to receive a peer review that meets the guidelines of proposed Section 605(b) every three years. Telephone call between Sonia Patton, Attorney, Commission, and John Nachmann, Attorney, Office of the General Counsel, the Nasdaq-Amex Market Group, on March 28, 2000.

[4] *See* Securities Act Release No. 6695 (April 1, 1987), 52 FR 11665 (April 10, 1987).

[5] *See* Securities Act Release No. 6958A (Sept. 24, 1992), 57 FR 45287 (Oct. 1, 1992), n.24.

[6] The administering entity would be required to maintain the reports until the completion of the next peer review report. Telephone call between Sonia Patton, Attorney, Commission, and John Nacmann, Attorney, Office of the General Counsel, The Nasdaq-Amex Market Group, on Mach 28, 2000.

[7] 15 U.S.C. 78(b)(5).

(ii) as to which the Exchange consents, the commission will:

(A) By order approve such proposed rule change, or

(B) Institute proceedings to determine whether the proposed rule change should be disapproved.

IV. Solicitation of Comments

Interested persons are invited to submit written data, views and arguments concerning the foregoing, including whether the proposed rule change is consistent with the Act. Persons making written submissions should file six copies thereof with the Secretary. Securities and Exchange Commission, 450 Fifth Street, NW., Washington, DC 20549–0609. Copies of the submission, all subsequent amendments, all written statements with respect to the proposed rule change that are filed with the Commission, and all written communications relating to the proposed rule change between the Commission and any person, other than those that may be withheld from the public in accordance with the provisions of 5 U.S.C. 552, will be available for inspection and copying in the Commission's Public Reference Room. Copies of the filing will also be available for inspection and copying at the principal office of the Amex. All submissions should refer to the File No. SR–Amex–00–04 and should be submitted by June 16, 2000.

For the Commission, by the Division of Market Regulation, pursuant to delegated authority. [8]

Margaret H. McFarland,

Deputy Secretary.

[FR Doc. 00–13259 Filed 5–25–00; 8:45 am]

BILLING CODE 8010–01–M

[8] 17 CFR 200.30–3(a)(12).

SECURITIES AND EXCHANGE COMMISSION

[Release No. 34–42799; File No. SR–CBOE–99–20]

Self–Regulatory Organizations; Order Approving Proposed Rule Change and Notice of Filing and Order Granting Accelerated Approval to Amendment No. 1 to Proposed Rule Change by the Chicago Board Options Exchange, Inc. Relating to the Exchange's Rapid Opening System

May 19, 2000.

I. Introduction

On May 21, 1999, the Chicago Board Options Exchange, Inc. (''CBOE'' or ''Exchange'') submitted to the Securities and Exchange Commission (''Commission''), pursuant to Section 19(b)(1) of the Securities Exchange Act of 1934 (''Act'')[1] and Rule 19b–4[2] thereunder, a proposed rule change. In its proposal, the CBOE seeks to amend its Rapid Opening System (''ROS'') rule to permit two Floor Officials to adjust affected trades in cases where an underlying stock has been opened at an erroneous price and later corrected on the underlying market. The proposed rule change was published for comment in the *Federal Register* on July 14, 1999.[3] On March 22, 2000, the CBOE filed Amendment No. 1 to the proposed rule change.[4] The Commission received no comments on the proposal. This order approves the proposal, as amended. In addition, the Commission is publishing this notice to solicit comments on Amendment No. 1 to the proposed rule change and is simultaneously approving Amendment No. 1 on an accelerated basis.

II. Description of the Proposal

In 1999, the Commission approved ROS on a pilot basis.[5] CBOE represents that ROS enables the Exchange to open classes of options within seconds of the opening of the underlying security, which in turn enables firms and customers to enter orders in open trading almost immediately after the opening bell. In addition, CBOE believes that in those classes where it has been employed, ROS has prevented backlogs of orders from developing during the opening. However, according to the Exchange, there have been a few instances where ROS has opened an option class at a price based upon an erroneous opening price of the underlying security disseminated by the primary market which is later corrected by the primary market only after ROS had opened the option class.[6]

In those instances when ROS opened on an erroneous print, the Exchange represents that it had to expend a substantial amount of time working with the participants in the trades to get their agreement to adjusts the trades and to determine which customer orders should have been filled at the opening. According to the Exchange, market makers in classes where ROS is employed have suffered significant deleterious financial consequences from these openings on an erroneous print because only those market maker trades that occurred at a price that disfavored a customer were adjusted. As a result, the Exchange believes market makers may become discouraged from participating in ROS because, even though the incidences where an erroneous print occur are rare, the financial consequences to a particular market maker can be substantial.

The Exchange also notes that when ROS opens based upon an incorrect price of the underlying security, certain customer orders can be adversely affected. In particular, customer orders that would have been executed had ROS opened based on a correct price may not be executed. Further, certain customer-to-customer trades may be executed at an erroneous price.

After these problems first occurred, the Exchange represents that it tried to educated trading crowds about ways to avoid them. For example, the trading crowds may wait to send their AutoQuote values until after the initial bid/ask quotes on the underlying are disseminated to ensure that the initial disseminated opening price for the underlying security is in line with the bid/ask quotes. Also, a system enhancement was put in place that provides as indication to crowds when ROS is being opened at a price that appears erroneous. The Exchange believes, however, that there is no guarantee that these methods can prevent every occurrence of an opening on ROS based on an erroneous underlying price.

The Exchange believes, therefore, that it is necessary to grant Floor Officials the authority to adjust opening trades in the event that the class is opened at an erroneous price.[7] The Exchange represents that this authority is similar to the authority Floor Officials currently

[1] 15 U.S.C. 78s(b)(1).

[2] 17 CFR 240.19b–4.

[3] *See* Securities Exchange Act Release No. 41599 (July 6, 1999), 64 FR 38058.

[4] In Amendment No. 1, the CBOE amended the text of the rule language to provide notification of trade adjustments, clarify the trades that can be adjusted, and limit the time period that trades can be adjusted to the day when the correction of the erroneous print occurs. *See* letter from Timothy Thompson, Director, Regulatory Affairs, CBOE, to Terri Evans, Special Counsel, Division of Market Regulation (''Division''), Commission, dated March 2, 2000 (''Amendment No. 1'').

[5] *See* Securities Exchange Act Release No. 41033 (February 9, 1999), 64 FR 8156 (February 18, 1999)≤ The pilot was initially approved through March eq, 2000. The termination of the pilot was subsequently extended to September 30, 2000. *See* Securities Exchange Act Release No. 42596 (March 30, 2000), 65 FR 18397 (April 7, 2000).

[6] Because ROS employs the Exchange's AutoQuote system and the Exchange's AutoQuote system relies on a data feed of the price of the underlying security to determine the option's price, an inaccurate underlying price can lead to an inaccurate ROS opening price.

[7] The concurrent approval of two Floor Officials would be needed before a trade could be adjusted. Telephone conversation between Timothy Thompson, Director, Regulatory Affairs, CBOE, and Terri Evans, Special Counsel, Division, Commission, on May 17, 2000.

have with respect to RAES trades.[8] The Exchange believes this change will prevent market makers from becoming discouraged from participating on ROS and will save time spent by Exchange staff negotiating with participants on trades that occur on erroneous prints. At the same time, the Exchange believes the rule change will give Floor Officials the authority to determine which trades should be adjusted so that a fair and equitable result is achieved for all market participants, including those customers that might not have been filled on the opening but otherwise would have been filled had the class opened at the correct price.

Under the proposed rule change, the Exchange will notify its members as soon as practicable after the correction of an erroneous print on the underlying.[9] In addition, the Exchange will indicate that this may result in the adjustment of opening trades that were either executed on ROS or should have been executed on ROS. Further, all adjustments will be made the day of the erroneous print correction.[10]

III. Solicitation of Comments

Interested persons are invited to submit written data, views, and arguments concerning Amendment No. 1, including whether the amendment is consistent with the Act. Persons making written submissions should file six copies thereof with the Secretary, Securities and Exchange Commission, 450 Fifth Street, NW, Washington, DC 20549–0609. Copies of the submission, all subsequent amendments, all written statements with respect to the proposed rule change that are filed with the Commission, and all written communications relating to the proposed rule change between the Commission and any person, other than those that may be withheld from the public in accordance with the provisions of 5 U.S.C. 552, will be available for inspection and copying in the Commission's Public Reference Room. Copies of such filing will also be available for inspection and copying at the principal office of the CBOE. All submissions should refer to File No. SR–CBOE–99–20 and should be submitted by June 16, 2000.

IV. Discussion

After careful review, the Commission finds that the proposed rule change is consistent with the requirements of the Act.[11] In particular, the Commission finds the proposal is consistent with Section 6(b)(5)[12] of the Act. Section 6(b)(5) requires, among other things, that the rules of an exchange be designed to promote just and equitable principles of trade and to protect investors and the public interest.

The Commission believes that the proposed rule change promotes just and equitable principles of trade. In particular, the proposal allows two Floor Officials to adjust trades when ROS opens a class based on an erroneous opening print disseminated by the underlying market.[13] In addition, the proposal would not only affect market makers, but also customers whose orders should or should not have been executed at opening. The Commission believes that procedures to correct erroneous trades in a timely manner are in the interest of all parties.

The Commission also believes the proposal includes adequate Exchange oversight and review procedures by requiring the concurrent approval of two Floor Officials before a trade can be adjusted. In addition, CBOE amended the proposal with Amendment No. 1 to include certain other procedural protections that limit the Exchange's and Floor Officials' discretion in adjusting trades. In particular, Amendment No. 1 requires the Exchange to notify its members as soon as practicable about the possibility of a trade adjustment, limits the adjustment of trades to those that were or should have been executed at the opening, and requires that the Exchange make the adjustments on the day when the correction of the erroneous print occurred. The Commission believes these requirements should help protect investors who execute trades at the opening that are later adjusted.

The Commission finds good cause for approving Amendment No. 1 prior to the thirtieth day after the date of publication of notice thereof in the **Federal Register.** The Commission believes that Amendment No. 1 strikes a reasonable balance between the need to correct erroneous trades and the need for adequate Exchange oversight over the process. Further, the Commission did not receive any comments on the original proposal, which did not contain the protections that were incorporated into the proposal through Amendment No. 1.

V. Conclusion

It is therefore ordered, pursuant to Section 19(b)(2) of the Act,[14] that the proposed rule change (SR–CBOE–99–20), as amended, is approved.

For the Commission, by the Division of Market Regulation, pursuant to delegated authority.[15]

Jonathan G. Katz,

Secretary.

[FR Doc. 00–13234 Filed 5–25–00; 8:45 am]

BILLING CODE 8010–01–M

[8] CBOE Rule 6.8(a)(ii) states in part; ''A trade execute on RAES at an erroneous quote should be treated as a trade reported at an erroneous price and adjusted to reflect the accurate market after receiving a Floor Official's approval.''

[9] According to the Exchange, either Exchange staff or the traders in the crowd where the particular options class is traded will know that the conditions have been met just as soon as the underlying market disseminates a corrected opening price, which usually occurs within a few minutes of the erroneous print's dissemination. The traders who trade the options have access to the underlying market's quotes and will receive a message that the opening print has been corrected. *See* Amendment No. 1, *supra* note 4.

[10] According to the Exchange, it does not have an automated system to handle the adjusting of these trades so it could require a significant amount of staff time to determine exactly which trades may need to be adjusted. Where there have been only a very few affected trades, the Exchange represents that its staff may be able to provide Floor Officials with the necessary information to adjust the trades within a few minutes. In an opening where a large number of trades are affected, the Exchange believes that it may take a number of hours to sift through the various trades and determine how each should be adjusted. As a result, the Exchange proposes to provide prompt notice that the situation has occurred and that trades may be adjusted. In this way, any trader or customer that may be affected by the adjustment can take any appropriate action to adjust his or her position. Because the opening print and its correction will be known as soon as any notice is disseminated, traders and customers should be able to determine the likelihood of their trade being adjusted and what the adjustment is likely to be. *See* Amendment No. 1, *supra* note 4.

[11] In addition, pursuant to Section 3(f) of the Act, the Commission has considered the proposed rule's impact on efficiency, competition, and capital formation. 15 U.S.C. 78c(f).

[12] 15 U.S.C. 78f(b)(5).

[13] Concurrent approval of both Floor Officials is necessary before a trade can be adjusted. *See supra* note 7.

[14] 15 U.S.C. 78s(b)(2).

[15] 17 CFR 200.30–3(a)(12).

SECURITIES AND EXCHANGE COMMISSION

[Release No. 34–42798; File No. SR–CBOE–00–19]

Self-Regulatory Organizations; Notice of Filing and Immediate Effectiveness of Proposed Rule Change by the Chicago Board Options Exchange, Incorporated To Make Certain Changes to Its Fee Schedule

May 18, 2000.

Pursuant to Section 19(b)(1) of the Securities Exchange Act of 1934 (''Act'')[1] and Rule 19b–4 thereunder,[2] notice is hereby given that on April 26, 2000, the Chicago Board Options Exchange, Incorporated (''CBOE'' or ''Exchange'') filed with the Securities and Exchange Commission

[1] 15 U.S.C. 78s(b)(1).

[2] 17 CFR 240.19b–4.

(''Commission'') the proposed rule change as described in Items I, II, and III below, which Items have been prepared by the Exchange. The Commission is publishing this notice to solicit comments on the proposed rule change from interested persons.

I. Self-Regulatory Organization's Statement of the Terms of Substance of the Proposed Rule Change

The CBOE proposes to rescind certain customer equity options fees. The text of the proposed rule change is available at the CBOE and the Commission.

II. Self-Regulatory Organization's Statement of the Purpose of, and Statutory Basis for, the Proposed Rule Change

In its filing with the Commission, the CBOE included statements concerning the purpose of and basis for the purposed rule change and discussed any comments it received on the proposed rule change. The text of these statements may be examined at the places specified in Item IV below. The CBOE has prepared summaries, set forth in Sections A, B, and C below, of the most significant aspects of such statements.

A. Self-Regulatory Organization's Statement of the Purpose of, and Statutory Basis for, the Proposed Rule Change

1. Purpose

The purpose of the proposed rule change is to rescind certain customer equity option fees. These fee changes are being implemented by the Exchange pursuant to CBOE Rule 2.22 and will be in effect as of May 1, 2000.

Specifically, the CBOE proposes to rescind transaction fees for manually executed equity options orders for public customers. The CBOE also proposes to eliminate the trade match fee for manually executed equity options orders for public customers.[3] Finally, the CBOE proposes to eliminate the floor brokerage fee assessed to floor brokers for execution of equity options orders of public customers. The Exchange believes this fee change would generate significant savings for its customers.

2. Statutory Basis

The CBOE believes that the proposed rule change would be consistent with the provisions of Section 6(b) of the Act[4] in general and would further the objectives of Section 6(b)(4)[5] in particular, in that it is designed to provide for the equitable allocation of reasonable dues, fees, and other charges among Exchange members.

B. Self-Regulatory Organization's Statement on Burden on Competition

The CBOE does not believe that the proposed rule change would result in any burden on competition.

Self-Regulatory Organization's Statement on Comments on the Proposed Rule Change Received From Members, Participants, or Others

No written comments were solicted or received with respect to the proposed rule change.

III. Date of Effectiveness of the Proposed Rule Change and Timing for Commission Action

Because the foregoing rule change establishes or changes a due, fee, or other charge imposed by the Exchange, it has become effective pursuant to Section 19(B)(3)(A)(ii) of the Act[6] and subparagraph (f)(2) of Rule 19b–4[7] thereunder. At any time within 60 days of the filing of such proposed rule change, the Commission may summarily abrogate such rule change if it appears to the Commission that such action is necessary or appropriate in the public interest, for the protection of investors, or otherwise in furtherance of the purpose of the Act.

IV. Solicitation of Comments

Interested persons are invited to submit written data, views, and arguments concerning the foregoing, including whether the proposed rule change is consistent with the Act. Persons making written submission should file six copies thereof with the Secretary, Securities and Exchange Commission, 450 Fifth Street, N.W., Washington, D.C. 20549-0609. Copies of the submission, all subsequent amendments, all written statements with respect to the proposed rule change that are filed with the Commission, and all written communications relating to the proposed rule change between the Commission and any person, other than those that may be withheld from the public in accordance with the provisions of 5 U.S.C. 552, will be available for inspection and copying in the Commission's Public Reference Room. Copies of such filing will also be available for inspection and copying at the principal office of the Exchange. All submissions should refer to File No. SR–CBOE–00–19 and should be submitted by June 16, 2000.

For the Commission, by the Division of Market Regulation, pursuant to delegated authority.[8]

Jonathan G. Katz,

Secretary.

[FR Doc. 00–13241 Filed 5–25–00; 8:45 am]

BILLING CODE 8010–01–M

[3] The Exchange recently has rescinded transaction fees and trade match fees for public customer equity options orders routed through the Exchange's electronic Order Routing System. *See* File No. SR–CBOE–00–06.

[4] 17 U.S.C. 78f(b).

[5] 17 U.S.C. 78f(b)(4).

[6] 15 U.S.C. 78s(b)(3)(A)(ii).

[7] 17 CFR 240.19b–4(f)(2).

[8] 17 CFR 200.30–3(a)(12)

SECURITIES AND EXCHANGE COMMISSION

[Release No. 34–42801; File No. SR–NASD–00–08]

Self–Regulatory Organizations; Notice of Filing of Proposed Rule Change by the National Association of Securities Dealers, Inc., Relating to Margin Rule Amendments for Non-Equity Securities and Exempt Accounts

May 19, 2000.

Pursuant to Section 19(b)(1) of the Securities Exchange Act of 1934 (''Act''),[1] and Rule 19b–4 thereunder,[2] notice is hereby given that on March 3, 2000, the National Association of Securities Dealers, Inc. (''NASD'' or ''Association''), through its wholly-owned subsidiary, NASD Regulation, Inc. (''NASD Regulation'') filed with the Securities and Exchange Commission (''SEC'' or ''Commission'') the proposed rule change as described in Items I, II, and III below, which Items have been prepared by NASD Regulation. The Commission is publishing this notice to solicit comments on the proposed rule change from interested persons.

I. Self-Regulatory Organization's Statement of the Terms of Substance of the Proposed Rule Change

NASD Regulation is proposing to amend Rule 2520 to revise the margin requirements relating to non-equity securities and exempt accounts. Proposed new language is in italics; proposed deletions are in brackets.

* * * * *

2520. Margin Requirements

(a) Definitions

For purposes of this paragraph, the following terms shall have the meanings specified below:

(a)(1) through (a)(3) No change

(4) The term ''designated account'' means the account of*:* [a bank, trust company, insurance company,

[1] 15 U.S.C. 78s(b)(1).

[2] 17 CFR 240.19b–4.

investment trust, state or political subdivision thereof, charitable or nonprofit educational institution regulated under the laws of the United States or any state, or pension or profit sharing plan subject to ERISA or of any agency of the United States or of a state or a political subdivision thereof.]

(A) *a bank (as defined in Section 3(a)(6) of the Act),*

(B) a savings association (as defined in Section 3(b) of the Federal Deposit Insurance Act), the deposits of which are insured by the Federal Deposit Insurance Corporation,

(C) an insurance company (as defined in Section 2(a)(17) of the Investment Company Act of 1940),

(D) an investment company registered with the Securities and Exchange Commission (SEC) under the Investment Company Act,

(E) a state or political subdivision thereof, or

(F) a pension or profit sharing plan subject to Employee Retirement Income Security Act (ERISA) or of an agency of the United States or of a state or a political subdivision thereof.

(a)(5) through (a)(8) No Change

(9) The term ''highly rated foreign sovereign debt securities'' means any debt securities (including major foreign sovereign debt securities) issued or guaranteed by the government of a foreign country, its provinces, state or cities, or a supranational entity, if at the time of the extension of credit the issue, the issuer or guarantor, or any other outstanding obligation of the issuer or guarantor ranked junior to or on a parity with the issue or the guarantee is assigned a rating (implicitly or explicitly) in one of the top two rating categories by at least one nationally ranked statistical rating organization.

(10) The term ''investment grade debt securities'' means any debt securities (including those issued by the government of a foreign country, its provinces, states or cities, or a supranational entity), if at the time of the extension of credit the issue, the issuer or guarantor, or any other outstanding obligation of the issuer or guarantor ranked junior to or on a parity with the issue or the guarantee is assigned a rating (implicitly or explicitly) in one of the top four rating categories by at least one nationally recognized statistical rating organization.

(11) The term ''major foreign sovereign debt'' means any debt securities issued or guaranteed by the government of a foreign country or a supranational entity, if at the time of the extension of credit the issue, the issuer or guarantor, or any other outstanding obligation of the issuer or guarantor ranked junior to or on a parity with the issue or the guarantee is assigned a rating (implicitly or explicitly) in the top rating category by at least one nationally recognized statistical rating organization.

(12) The term ''mortgage related securities'' means securities falling within the definition in Section 3(a)(41) of the Act.

(13) The term ''exempt account'' means a member, non-member broker/dealer registered as a broker or dealer under the Act, ''designated account,'' or any person having a net worth of at least forty-five million dollars and financial assets of at least forty-million dollars.

(14) The term ''non-equity securities'' means any securities other than equity securities as defined in Section 3(a)(11) of the Act.

(15) The term ''listed non-equity securities'' means any non-equity securities that: (A) are listed on a national securities exchange; or (B) have unlisted trading privileges on a national securities exchange.

(16) The term ''other marginable non-equity securities'' means:

(A) Any debt securities not traded on a national securities exchange meeting all of the following requirements:

(i) At the time of the original issue, a principal amount of not less than $25,000,000 of the issue was outstanding;

(ii) The issue was registered under Section 5 of the Securities Act of 1933 and the issuer either files periodic reports pursuant to Section 13(a) or 15(d) of the Act or is an insurance company which meets all of the conditions specified in Section 12(g)(2)(G) of the Act; and

(iii) At the time of the extensions of credit, the creditor has a reasonable basis for believing that the issuer is not in default on interest or principal payments; or

(B) Any private pass-through securities (not guaranteed by any agency of the U.S. government) meeting all of the following requirements:

(i) An aggregate principal amount of not less than $25,000,000 (which may be issued in series) was issued pursuant to a registration statement filed with the SEC under Section 5 of the Securities Act of 1933;

(ii) Current reports relating to the issue have been filed with the SEC; and

(iii) At the time of the credit extension, the creditor has a reasonable basis for believing that mortgage interest, principal payments and other distributions are being passed through as required and that the servicing agent is meeting its material obligations under the terms of the offering.

(b)(1) through (e)(1) No change

(e)(2) Exempted Securities, [Marginable Corporate Debt Securities] *Non-equity Securities* and Baskets

(A) Obligations of the United States *and Highly Rated Foreign Sovereign Debt Securities*

On net ''long'' or net ''short'' positions in obligations (including zero coupon bonds, *i.e.,* bonds with coupons detached or non-interest bearing bonds) issued or guaranteed as to principal or interest by the United States Government or [issued or guaranteed] by corporations in which the United States has a direct or indirect interest as shall be designated for exemption by the Secretary of the Treasury, *or in obligations that are highly rated foreign sovereign debt securities,* the margin to be maintained shall be the percentage of the current market value of such obligations as specified in the applicable category below:

(i) Less than one year to maturity—1 percent

(ii) One year but less than three years to maturity—2 percent

(iii) Three years but less than five years to maturity—3 percent

(iv) Five years but less than ten years to maturity—4 percent

(v) Ten years but less than twenty years to maturity—5 percent[, or]

(vi) Twenty years or more to maturity—6 percent

Notwithstanding the above, on zero coupon bonds with five years or more to maturity the margin to be maintained shall not be less than 3 percent of the principal amount of the obligation.

When such obligations other than United States Treasury bills are due to mature in thirty calendar days or less, a member, at its discretion, may permit the customer to substitute another such obligation for the maturing obligation and use the margin held on the maturing obligation to reduce the margin required on the new obligation, provided the customer has given the member irrevocable instructions to redeem the maturing obligation.

(B) All Other Exempted Securities

On any positions in exempted securities other than obligations of the United States, the margin to be maintained shall be [15]*7* percent of the current market value [or 7 percent of the principal amount of such obligation, whichever amount is greater].

(C) [Non-Convertible Corporate Debt] *Non-Equity* Securities

On any positions in [non-convertible corporate debt] *non-equity* securities, [which are listed or traded on a registered national securities exchange or qualify as an ''OTC margin bond,'' as defined in Section 220.2(t) of Regulation T of the Board of Governors of the Federal Reserve System], the margin to be maintained *(except where a lesser requirement is imposed by other provisions of this Rule)* shall be]*:*

(i) 10 percent of the current market value in the case of investment grade debt securities; and

(ii) 20 percent of the current market value or 7 percent of the principal amount, whichever amount is greater, *in the case of all other listed non-equity securities, and all other marginable non-equity securities as defined in paragraph (a)(16) of this Rule* [except on mortgage related securities as defined in Section 3(a)(41) of the Act the margin to be maintained for an exempt account shall be 5 percent of the current market value. For purposes of this subparagraph, an exempt account shall be defined as a member, non-member broker/dealer, ''designated account'' or any person having net tangible assets of at least sixteen million dollars.]

(D) and (E) No Change

(F) [Cash] Transactions With [Customers] *Exempt Accounts Involving Certain ''Good Faith'' Securities*

[When a customer purchases an issued exempted security from or through a member in a cash account, full payment shall be made promptly. If, however, delivery or payment therefor is not made promptly after the trade date, a deposit shall be required as if it were a margin transaction, unless it is a transaction with a ''designated account.'']

On any position resulting from a transaction [in issued] *involving* exempted securities, *mortgage related securities, or major foreign soveriegn debt securities* [made for a member, or a non-member broker/dealer, or] made for or with [a ''designated''] *an ''exempt* account,'' no margin need be required and *any marked to the market loss on* such position need not be [marked to the market] *collected.* However, [where such position is not marked to the market, an amount equal to the loss at the market in such position] *the amount of any uncollected marked to the market loss* shall be [charged against] *deducted in computing* the member's net capital as provided in SEC Rule 15c3–1, *subject to the limits provided in paragraph (e)(2)(H) below.*

(G) Transactions With Exempt Accounts Involving Highly Rated Foreign Sovereign Debt Securities and Investment Grade Debt Securities

On any position resulting from a transaction made for or with an ''exempt account'' (other than a position subject to paragraph (e)(2)(F), the margin to be maintained on highly rated foreign sovereign debt and investment grade debt securities shall be, in lieu of any greater requirements imposed under this Rule, (i) 0.5 percent of current market value in the case of highly rated foreign sovereign debt securities, and (ii) 3 percent of current market value in the case of all other investment grade debt securities. The member need not collect any such margin, provided the amount equal to the margin required shall be deducted in computing the member's net capital as provided in SEC Rule 15c3–1, subject to the limits provided in paragraph (e)(2)(H) below.

(H) Limits on Net Capital Deductions for Exempt Accounts

(i) Member organizations shall maintain a written risk analysis methodology for assessing the amount of credit extended to exempt accounts pursuant to paragraphs (e)(2)(F) and (e)(2)(G) which shall be made available to the Association upon request.

(ii) In the event that the deductions of securities positions from net capital deductions taken by a member as a result of marked to the market losses incurred under paragraphs (e)(2)(F) and (e)(2)(G) (exclusive of the percentage requirements established thereunder) exceed:

a. on any one account or group of commonly controlled accounts, 5 percent of the member's tentative net capital, or

b. on all accounts combined, 25 percent of the member's tentative net capital,

and, such excess exists on the fifth business day after it was incurred, the member shall give prompt written notice to the Association and shall not enter into any new transaction(s) subject to the provisions of paragraphs (e)(2)(F) or (e)(2)(G) that would result in an increase in the amount of such excess under, as applicable, subparagraph a. or b. above.

* * * * *

II. Self-Regulatory Organization's Statement of the Purpose of, and Statutory Basis for, the Proposed Rule Change

In its filing with the Commission, NASD Regulation included statements concerning the purpose of and basis for the proposed rule change and discussed any comments it received on the proposed rule change. The text of these statements may be examined at the places specified in Item IV below. NASD Regulation has prepared summaries, set forth in Sections A, B, and C below, of the most significant aspects of such statements.

A. Self-Regulatory Organization's Statement of the Purpose of, and Statutory Basis for, the Proposed Rule Change

1. Purpose

NASD Regulation is proposing amendments to Rule 2520 to revise the margin requirements for certain non-equity securities and to expand the types of non-equity securities eligible for exempt account treatment. Currently, Regulation T [3] of the FRB, which establishes initial margin reqirements, provides that transactions in non-equity securities are subject to ''good faith'' requirements [4] when effected in a margin account. Securities that are transacted in a ''good faith'' account are not subject to Regulation T margin requirements, [5] but are subject to the margin required by the creditor in ''good faith'' or the percentage set by the regulatory authority where the trade occurs, whichever is greater. As a result, the margin requirements of NASD Rule 2520 apply to non-equity positions maintained in customers' accounts and are important in providing ongoing safety and soundness levels. In this regard, NASD Regulation believes that the proposed rule change provides for margin requirements for non-equity securities that are commensurate with the risks associated with positions in such securities held by customers.

In addition, NASD Regulation is proposing several changes with regard to exempt accounts. Specifically, the proposed rule change will modify the definition of ''exempt account,'' including increasing the financial threshold for a customer to be considered an exempt account, and will revise margin requirements for exempt account transactions involving mortgage-related securities, major

[3] 12 CFR 220. The Board of Governors of the Federal Reseve System (''FRB'') issued Regulation T pursuant to Section 7(c) of the Act.

[4] The term ''good faith'' in this context generally means that such transactions are subject to the requirements of the applicable self-reguatory organizaiton and that such requirements shall be applicable for initial and maintenance margin purposes.

[5] In 1998, amendments to Regulation T established ''good faith'' accounts, which can be used for transactions in non-equity securities in lieu of a margin or cash account. *See* Board of Governors of the Federal Reserve Docket Nos. R–0923, and R–0944 (January 8, 1998), 63 FR 2706 (January 16, 1998).

foreign sovereign debt securities, highly rated foreign debt securities and other investment grade debt securities.

Non-Equity Securities NASD Regulation believes that the proposed rule change will provide for margin requirements on non-equity securities that are commensurate with the risks associated with positions in such securities held by customers. Under the proposed rule change, the margin requirements for highly rated foreign sovereign debt securities will be the amounts specified in NASD Rule 2520 for U.S. debt securities.[6] In addtition, the posposed rule change will reduce the margin requirement for exempted securities [7] other than U.S. debt securities from 15 percent to 7 percent of the current market value, and reduce the margin requirement for investment grade debt securities, including investment grade debt securities issued by the government of a foreign country, from 20 percent to 10 percent of the current market value. The margin requirement for all other marginable non-equity securities will remain at the greater of 20 percent of the current market value or 7 percent of the principal amount. The proposed rule change will result in margin requirements for investment grade debt securities and exempted securities other than U.S. debt securities that are comparable to the highest haircut percentages under the SEC's net capital rule [8] for proprietary positions in similar securities.

Exempt Accounts. Currently, NASD Rule 2520 contains margin requirements specifically addressing transactions by exempt accounts in exempted securities and mortgage-related securities. These requirements are lower than those applicable to transactions in such securities effected in accounts other than exempt accounts. The proposed rule change will define ''exempt account'' as a member organization, non-member broker/dealer registered as a broker or dealer pursuant to the Act or ''designated account,'' [9] and will increase the financial threshold for a person to be considered an exempt account to require a net worth of at least $45 million and financial assets of $40 million.

The proposed rule change also will provide lower margin requirements for exempt account transactions in highly rated foreign sovereign debt, investment grade foreign sovereign debt, and other investment grade non-equity securities. According to NASD Regulation, the proposed rule change recognizes both the quality of the securities as well as the creditworthiness of the customer and, as such, is intended to maintain reasonable safety and soundness standards. For transactions in these types of securities by exempt accounts, members will be required either to collect margin equal to the marked to market losses and any percentage requirements under the rule or to take a net capital charge, subject to the limits provided in proposed NASD Rule 2520(e)(2)(H). Under the proposed rule change, the percentage requirements will be 3 percent of current market value for all investment grade corporate debt and for foreign sovereign debt in the lower two investment grade categories and 0.5 percent of current market value for foreign sovereign debt in the second highest investment grade category (*i.e.,* highly rated foreign sovereign debt securities). These terms are also defined in the proposed rule change.

For major foreign sovereign debt securities and mortgage-related securities in exempt accounts, the proposed rule change provides the same margin treatment for these securities as U.S. Government securities in exempt accounts, in that no margin will be required and marked to the market losses need not be collected, subject to the limits proposed in NASD Rule 2520(e)(2)(H).

Proposed NASD Rule 2520(e)(2)(H) will also limit the amount of any uncollected marked to market losses which are being deducted from a member's net capital to 5 percent for each exempt account and 25 percent for all exempt accounts combined. When marked to market losses exceeding these limits continue to exist on the fifth business day after they were incurred, the member will be required to provide the Association with written notification and will be prohibited from entering into any new transactions that would increase the amount of the excess.

Other Provisions. The proposed rule change will provide new definitional provisions, which, among other things, will define the following types of non-equity securities: highly rated foreign sovereign debt securities; investment grade debt securities; major foreign sovereign debt securities; listed non-equity securities; and other marginable non-equity securities. The defined terms categorize certain types of non-equity securities for purposes of prescribing the applicable margin requirements. In addition, the proposed rule change will require that, as good business practice and for safety and soundness considerations, members maintain written procedures for assessing credit extended to exempt accounts.

2. Statutory Basis

NASD Regulation believes that the proposed rule change is consistent with the provisions of section 15A(b)(6) [10] of the Act which requires, among other things, that the Association's rules must be designed to prevent fraudulent and manipulative acts and practices, to promote just and equitable principles of trade and, in general, to protect investors and the public interest. NASD Regulation believes that the proposed rule change will promote the safety and soundness of member firms and is consistent with the rules and regulations of the FRB for the purpose of preventing the excess use of credit for the purchase or carrying of securities.

B. Self-Regulatory Organization's Statement on Burden on Competition

NASD Regulation does not believe that the proposed rule change will result in any burden on competition that is not necessary or appropriate in furtherance of the purposes of the Act.

C. Self-Regulatory Organization's Statement on Comments on the Proposed Rule Change Received From Members, Participants or Others

Written comments were neither solicited nor received.

III. Date of Effectiveness of the Proposed Rule Change and Timing for Commission Action

Within 35 days of the date of publication of this notice in the **Federal Register** or within such longer period (i) as the Commission may designate up to 90 days of such date if it finds such longer period to be appropriate and publishes its reasons for so finding or

[6] The margin required for U.S. government obligations under NASD Rule 2520 varies according to the length of time to maturity.

[7] NASD Rule 2520(a)(6) provides that exempted securities have the meaning provided in Section 3(a)(12) of the Act.

[8] *See* SEC Rule 15c3–1.

[9] NASD Regulation proposes to revise the definition of ''designated account.'' Specifically, the proposal defines ''designated account'' to mean the account of: (1) a bank, as defined in Section 3(a)(6) of the Act; (2) a savings association, as defined in Section 3(b) of the Federal Deposit Insurance Act, the deposits of which are insured by the Federal Deposit Insurance Corporation; (3) an insurance company, as defined in Section 2(a)(17) of the Investment Company Act of 1940; (4) an investment company registered with the SEC under the Investment Company Act of 1940; (5) a state or a political subdivision thereof; or (6) a pension or profit sharing plan subject to ERISA or of an agency of the United States or of a state or a political subdivision thereof.

[10] 15 U.S.C. 78o–3(b)(6).

(ii) as to which the NASD consents, the Commission will:

A. By order approve the proposed rule change, or

B. Institute proceedings to determine whether the proposed rule chane should be disapproved.

IV. Solicitation of Comments

Interested persons are invited to submit written data, views, and arguments concerning the foregoing, including whether the proposed rule change is consistent with the Act. Persons making written submissions should file six copies thereof with the Secretary, Securities and Exchange Commission, 450 Fifth Street, N.W., Washington, D.C. 20549–0609. Copies of the submission, all subsequent amendments, all written statements with respect to the proposed rule change that are filed with the Commission, and all written communications relating to the proposed rule change between the Commission and any person, other than those that may be withheld from the public in accordance with the provisions of 5 U.S.C. 552, will be available for inspection and copying at the Commission's Public Reference Room. Copies of such filing will also be available for inspection and copying at the principal office of the NASD. All submissions should refer to File No. SR–NASD–00–08 and should be submitted by June 16, 2000.

For the Commission, by the Division of Market Regulation, pursuant to delegated authority. [11]

Margaret H. McFarland,

Deputy Secretary.

[FR Doc. 00–13260 Filed 5–25–00; 8:45 am]

BILLING CODE 8010–01–M

[11] 17 CFR 200.30–3(a)(12).

SECURITIES AND EXCHANGE COMMISSION

[Release No. 34–42802; File No. SR–Phlx–00–42]

Self-Regulatory Organizations; Notice of Filing and Immediate Effectiveness of Proposed Rule Change by the Philadelphia Stock Exchange, Inc. To Adopt a New Transaction Fee of $0.20 Per Trade for Specialists Trading on the Philadelphia Stock Exchange Automated Communication System

May 19, 2000.

Pursuant to Section 19(b)(1) of the Securities Exchange Act of 1934 (''Act'') [1] and Rule 19b 4 thereunder,[2] notice hereby is given that on May 8, 2000, the Philadelphia Stock Exchange, Inc. (''Phlx'' or ''Exchange'') filed with the Securities and Exchange Commission (''Commission'') the proposed rule change as described in Items I, II, and III below, which Items have been prepared by the Exchange.[3] The Commission is publishing this notice to solicit comments on the proposed rule change from interested persons.

[1] 15 U.S.C. 78s(b)(1).

[2] 17 CFR 240.19b–4.

I. Self-Regulatory Organization's Statement of the Terms of Substance of the Proposed Rule Change

The Phlx proposes to amend its schedule of dues, fees, and charges to initiate a transaction fee of $0.20 per trade for equity specialists using the PACE System. The proposed fee would be effective on June 1, 2000. The following is the text of the proposed addition to the Phlx fee schedule:

''EQUITY FLOOR SPECIALIST
TRANSACTION FEE $.20 per trade for each trade conducted on PACE''

II. Self-Regulatory Organization's Statement of the Purpose of, and Statutory Basis for, the Proposed Rule Change

In its filing with the Commission, the Phlx included statements concerning the purpose of and basis for the proposed rule change and discussed any comments it received regarding the proposed rule change. The text of these statements may be examined at the places specified in Item IV below. the Phlx has prepared summaries, set forth in Sections A, B, and C below, of the most significant aspects of such statements.

A. Self-Regulatory Organization's Statement of the Purpose of, and Statutory Basis for, the Proposed Rule Change

1. Purpose

The proposed rule change would amend the Exchange's fee schedule to include a transaction fee of $0.20 per trade for those specialists trading through the PACE system on the equity floor of the Exchange. PACE is the Exchange's automated order entry, routing, and execution system. The purpose of the fee is to generate revenues for the Exchange that would strengthen its overall financial and competitive posture. For example, the Exchange may continue to incur costs respecting PACE system development, such as decimalization efforts and other planned improvements. Of course, the Phlx is seeking to raise revenues for overall Exchange use. The Exchange believes that the fee is both reasonable and equitable because Phlx specialists are not currently charged any Phlx fee respecting PACE trades.

2. Basis

The Exchange believes that the proposed rule change is consistent with Section 6(b) of the Act [4] in general and Section 6(b)(4) of the Act [5] in particular in that it is intended to provide for the equitable allocation of reasonable dues, fees, and other charges among its members and other persons using its facilities.[6]

B. Self-Regulatory Organization's Statement of Burden on Competition

The Phlx does not believe that the proposed rule change would impose any inappropriate burden on competition.

C. Self-Regulatory Organization's Statement on Comments on the Proposed Rule Change Received from Members, Participants, or Others

No written comments were either solicited or received.

III. Date of Effectiveness of the Proposed Rule Change and Timing for Commission Action

The foregoing rule change establishes or changes a due, fee, or other charge imposed by the Exchange and, therefore, has become effective pursuant to Section 19(B)(3)(A)(ii) of the Act [7] and Rule 19b–4(f)(2) [8] thereunder. The Exchange intends to implement the fee effective June 1, 2000. At any time within 60 days of the filing of such proposed rule change, the Commission may summarily abrogate such rule change if it appears to the Commission that such action is necessary or

[3] The current proposal replaces File No. SR–Phlx–00–36, which the Phlx has withdrawn. *See* Letter from John Kenney, Jr., Counsel, Phlx, to Nancy Sanow, Assistant Director, Division of Market Regulation, Commission, dated May 5, 2000. In file No. SR–Phlx–00–36, the Phlx proposed to establish a monthly transaction fee of $0.20 per $1000 of value traded for equity specialists' trades transacted through the Philadelphia Stock Exchange Automated Communication and Execution (''PACE'') System. According to the Phlx, the Exchange inadvertently filed File No. SR–Phlx–00–36 with the Commission. Telephone conversation between John Kenney, Jr., Counsel, Phlx, and Michael Gaw, Attorney, Division of Market Regulation, Commission, on May 16, 2000 (''May 16 Conversation'')

[4] 15 U.S.C. 78f(b).

[5] 15 U.S.C. 78f(b)(4).

[6] The Phlx represents that the proposed fees would be charged exclusively to members and not to public customers. *See* May 16 Conversion, *supra* note 3. The Commission notes that this proposed rule change is, therefore, properly filed under Section 19(b)(3)(A)(ii) of the Act. 15 U.S.C. 78s(b)(3)(A)(ii).

[7] 15 U.S.C. 78s(b)(3)(A)(ii).

[8] 17 CFR 240.19b–4(f)(2).

appropriate in the public interest, for the protection of investors, or otherwise in furtherance of the purpose of the Act.

IV. Solicitation of Comments

Interested persons are invited to submit written data, views, and arguments concerning the foregoing, including whether the proposed rule change is consistent with the Act. Persons making written submissions should file six copies thereof with the Secretary, Securities and Exchange Commission, 450 Fifth Street, NW., Washington, DC 20549–0609. Copies of the submission, all subsequent amendments, all written statements with respect to the proposed rule change that are filed with the Commission, and all written communications relating to the proposed rule change between the Commission and any person, other than those that may be withheld from the public in accordance with the provisions of 5 U.S.C. 552, will be available for inspection and copying at the Commission's Public Reference Room. Copies of such filing will also be available for inspection and copying at the principal office of the Exchange. All submissions should refer to File No. SR–Phlx–00–42 and should be submitted by June 16, 2000.

For the Commission, by the Division of Market Regulation, pursuant to delegated authority.[9]

Margaret H. McFarland,

Deputy Secretary.

[FR Doc. 00–13258 Filed 5–25–00; 8:45 am]

BILLING CODE 8010–01–M

[9] 17 CFR 200.30–3(a)(12).

SMALL BUSINESS ADMINISTRATION

Reporting and Recordkeeping Requirements Under OMB Review

AGENCY: Small Business Administration.

ACTION: Notice of Reporting Requirements Submitted for OMB Review.

SUMMARY: Under the provisions of the Paperwork Reduction Act (44 U.S.C. Chapter 35), agencies are required to submit proposed reporting and recordkeeping requirements to OMB for review and approval, and to publish a notice in the **Federal Register** notifying the public that the agency has made such a submission.

DATES: Submit comments on or before June 26, 2000. If you intend to comment but cannot prepare comments promptly, please advise the OMB Reviewer and the Agency Clearance Officer before the deadline.

COPIES: Request for clearance (OMB 83–1), supporting statement, and other documents submitted to OMB for review may be obtained from the Agency Clearance Officer.

ADDRESSES: Address all comments concerning this notice to: Agency Clearance Officer, Jacqueline White, Small Business Administration, 409 3rd Street, S.W., 5th Floor, Washington, D.C. 20416; and OMB Reviewer, Office of Information and Regulatory Affairs, Office of Management and Budget, New Executive Office Building, Washington, D.C. 20503.

FOR FURTHER INFORMATION CONTACT: Jacqueline White, Agency Clearance Officer, (202) 205-7044.

SUPPLEMENTARY INFORMATION:

Title: Surety Bond Guarantee Assistance.

No's: SBA Forms 990, 991, 994B, 994C, 994F and 994H.

Frequency: On Occasion.

Description of Respondents: Small Business Contractors applying for the Surety Bond Guarantee Program.

Annual Responses: 195,930.

Annual Burden: 53,375.

Jacqueline White,

Chief, Administrative Information Branch.

[FR Doc. 00–13341 Filed 5–25–00; 8:45 am]

BILLING CODE 8025–01–M

SMALL BUSINESS ADMINISTRATION

[Declaration of Disaster #3254]

State of Missouri

As a result of the President's major disaster declaration on May 12, 2000, I find that the following Counties in the State of Missouri constitute a disaster area due to damages caused by severe thunderstorms and flash flooding that occurred on May 6 and 7, 2000: Crawford, Franklin, Gasconade, Jefferson, St. Charles, Ste. Genevieve, St. Francois, St. Louis County, Warren, and Washington. Applications for loans for physical damage as a result of this disaster may be filed until the close of business on July 11, 2000, and for loans for economic injury until the close of business on February 12, 2001 at the address listed below or other locally announced locations: U.S. Small Business Administration, Disaster Area 3 Office, 4400 Amon Carter Blvd., Suite 102, Fort Worth, TX 76155.

In addition, applications for economic injury loans from small businesses located in the following contiguous counties may be filed until the specified date at the above location: Callaway, Dent, Iron, Lincoln, Madison, Maries, Montgomery, Osage, Perry, and Phelps Counties, and the City of St. Louis in the State of Missouri, and Calhoun, Jersey, Madison, Monroe, Randolph, and St. Clair Counties in the State of Illinois.

The interest rates are:

For Physical Damage

Homeowners With Credit Available Elsewhere: 7.375%

Homeowners Without Credit Available Elsewhere: 3.687%

Businesses With Credit Available Elsewhere: 8.000%

Businesses and Non-Profit Organizations Without Credit Available Elsewhere: 4.000%

Others (Including Non-Profit Organizations) With Credit Available Elsewhere: 6.750%

For Economic Injury

Businesses and Small Agricultural Cooperatives Without Credit Available Elsewhere: 4.000%

The number assigned to this disaster for physical damage is 325406. For economic injury the numbers are 9H3600 for Missouri and 9H3700 for Illinois.

(Catalog of Federal Domestic Assistance Program Nos. 59002 and 59008)

Dated: May 18, 2000.

James E. Rivera,

Acting Associate Administrator for Disaster Assistance.

[FR Doc. 00–13231 Filed 5–25–00; 8:45 am]

BILLING CODE 8025–01–U

SMALL BUSINESS ADMINISTRATION

[Declaration of Disaster #3255]

State of New Mexico

As a result of the President's major disaster declaration on May 13, 2000, and an amendment thereto on May 16, I find that the following Counties in the State of New Mexico constitute a disaster area due to damages caused by a severe forest fire beginning on May 5, 2000 and continuing: Bernalillo, Chaves, Cibola, DeBaca, Dona Ana, Eddy, Guadalupe, Lincoln, Los Alamos, McKinley, Mora, Otero, Rio Arriba, San Juan, San Miguel, Sandoval, Santa Fe, Sierra, Socorro, Taos, and Torrance. Applications for loans for physical damage as a result of this disaster may be filed until the close of business on July 12, 2000, and for loans for economic injury until the close of business on February 13, 2001 at the address listed below or other locally announced locations: U.S. Small

Business Administration, Disaster Area 3 Office, 4400 Amon Carter Blvd., Suite 102, Fort Worth, TX 76155.

In addition, applications for economic injury loans from small businesses located in the following contiguous counties may be filed until the specified date at the above location: Catron, Colfax, Curry, Grant, Harding, Lea, Luna, Quay, Roosevelt, and Valencia Counties in New Mexico; Apache County, Arizona; Archuleta, Conejos, Costilla, La Plata, and Montezuma Counties in Colorado; San Juan County, Utah; and Culberson, El Paso, Hudspeth, Loving, and Reeves Counties in Texas.

The interest rates are:

For Physical Damage

Homeowners With Credit Available Elsewhere: 7.375%
Homeowners Without Credit Available Elsewhere: 3.687%
Businesses With Credit Available Elsewhere: 8.000%
Businesses and Non-Profit Organizations Without Credit Available Elsewhere: 4.000%
Others (Including Non-Profit Organizations) With Credit Available Elsewhere: 6.750%

For Economic Injury

Businesses and Small Agricultural Cooperatives Without Credit Available Elsewhere: 4.000%

The number assigned to this disaster for physical damage is 325505. For economic injury the numbers are 9H3800 for New Mexico, 9H3900 for Arizona, 9H4000 for Colorado, 9H4100 for Utah, and 9H4200 for Texas.

(Catalog of Federal Domestic Assistance Program Nos. 59002 and 59008)

Dated: May 18, 2000.

James E. Rivera,

Acting Associate Administrator for Disaster Assistance.

[FR Doc. 00–13232 Filed 5–25–00; 8:45 am]

BILLING CODE 8025–01–P

DEPARTMENT OF TRANSPORTATION

Federal Motor Carrier Safety Administration

Controlled Substances and Alcohol Testing Management Information System (MIS) Statistical Data

May 15, 2000.

AGENCY: Federal Motor Carrier Safety Administration (FMCSA), DOT.

ACTION: Notice.

SUMMARY: The FMCSA is announcing the motor carrier industry's 1997 and 1998 controlled substances and alcohol usage rates based on random testing. The positive rate for controlled substances was 1.3 percent in calendar year 1997, and 1.5 percent in 1998. The alcohol ''violation'' rate was 0.2 percent in 1997, and 0.4 percent in 1998. Because the alcohol ''violation'' rate has remained below 0.5 percent for these two years, the FMCSA is announcing that it is maintaining the random alcohol testing rate for calendar year 2000 at 10 percent, in accordance with the provisions of the testing regulations. This lowered rate continues the DOT policy set in 1998 when data supported the same policy decision. Because the positive rate from controlled substances testing has remained above 1.0 percent during this same period, the FMCSA is maintaining the random controlled substances testing rate for calendar year 2000 at 50 percent, in accordance with FMCSA regulations. This notice serves to continue the existing policy and provides that it is effective until further notice.

FOR FURTHER INFORMATION CONTACT: For enforcement questions: Mr. Kenneth Rodgers, Office of Enforcement and Compliance (HMCE–20), (202) 366–4016; For substantive questions: Mr. David M. Lehrman, Office of Policy, Plans, and Regulations, (202) 366–0994; For statistical questions: Mr. Richard Gruberg, Office of Motor Carrier Information Analysis (HIA–20), (202) 366–2959; For legal questions, Mr. Michael Falk, Office of the Chief Counsel, (HCC–20), (202) 366–1384, Federal Highway Administration, 400 Seventh Street, SW., Washington, DC 20590.

SUPPLEMENTARY INFORMATION:

Electronic Access

An electronic copy of this document may be downloaded using a modem and suitable communications software from the Government Printing Office's Electronic Bulletin Board Service at (202) 512–1661. Internet users may reach the Office of the **Federal Register**'s home page at: http://www.nara.gov/fedreg and the Government Printing Office's database at: http://www.access.gpo.gov/nara.

Creation of New Agency

In October 1999, the Secretary of Transportation rescinded the authority previously delegated to the Federal Highway Administrator to perform the motor carrier functions and operations, and to carry out the duties and powers related to motor carrier safety, that are statutorily vested in the Secretary. That authority was redelegated to the Director of the Office of Motor Carrier Safety (OMCS), a new office within the Department (see, 64 FR 56270, October 19, 1999, and 64 FR 58356, October 29, 1999). The OMCS had previously been the FHWA's Office of Motor Carriers (OMC).

The Motor Carrier Safety Improvement Act of 1999 established the Federal Motor Carrier Safety Administration as a new operating administration within the Department of Transportation, effective January 1, 2000 (Public Law 106–159, 113 Stat. 1748, December 9, 1999). The Secretary therefore rescinded the motor carrier authority delegated to the Director of the OMCS and redelegated it to the Administrator of the FMCSA (65 FR 220, January 4, 2000).

The staff previously assigned to the FHWA's OMC, and then to the OMCS, are now assigned to the FMCSA. The motor carrier functions of the FHWA's Resource Centers and Division (i.e., State) Offices have been transferred without change to the FMCSA Resource Centers and FMCSA Division Offices, respectively. For the time being, all phone numbers and addresses are unchanged. Similarly, rulemaking activities begun under the auspices of the FHWA and continued under the OMCS will be completed by the FMCSA.

Background

On December 23, 1993 (58 FR 68220), the FHWA announced it would require motor carriers subject to 49 CFR part 391, later replaced by part 382, to implement and maintain specific controlled substance testing data, and submit an appropriate annual report when requested. All motor carriers must maintain this information. The FHWA randomly selects a sample of motor carriers annually and asks those selected to submit their data.

On February 15, 1994 (59 FR 7484), the FHWA promulgated new controlled substances and alcohol testing rules in 49 CFR part 382. These rules combined the controlled substances annual report with a similar alcohol rule ''violation'' annual report. An alcohol rule violation for purposes of the annual report are alcohol concentrations of 0.04 or greater and refusals to submit to alcohol testing.

On March 13, 1995, the FHWA amended the rule to reduce the information collection burden on all respondents, including small entities (60 FR 13369).

The current rule at § 382.403, formerly at 49 CFR 391.87(h), is essential for the accomplishment of the following four goals:

1. Collect controlled substance and alcohol testing statistical data.

2. Use the data to analyze the FMCSA's current approach to deterring and detecting illegal controlled substance use and alcohol misuse in the motor carrier industry.

3. Determine each calendar year's random selection rates for alcohol and controlled substance testing under the rule.

4. Provide for a more efficient and effective regulatory program.

In 1995, the FHWA requested a sample of motor carriers report to the FHWA data collected in 1994. The FHWA determined the random positive controlled substance usage rate for commercial motor vehicle (CMV) drivers subject to 49 CFR part 391, subpart H, for the period of January 1, 1994, through December 31, 1994, was 2.6 percent. This rate was estimated to be 2.8% in 1995 and 2.2% in 1996.

Estimates of positive usage rates for alcohol were first produced for calendar year 1995. The alcohol testing ''violation'' rate was 0.14 percent in 1995, and 0.18 percent in 1996.

The criteria for raising or lowering the random testing rate are established by regulation. Under 49 CFR 382.305(d)(1), when the minimum annual percentage rate for random alcohol testing is 25 percent or more, the FMCSA Administrator may lower the rate to 10 percent of all driver positions if the Administrator determines that the data received under the reporting requirements of § 382.403 for two consecutive years indicate that the violation rate is less than 0.5 percent.

Under § 382.305(e)(1), when the minimum annual percentage rate for random alcohol testing is 10 percent, the Administrator is required to increase the rate to 25 percent only if the violation rate is equal to or greater than 0.5 percent.

Under § 382.305(g), when the minimum annual percentage rate for random controlled substances testing is 50 percent, the Administrator may lower the rate to 25 percent of all driver positions only if the data indicate that the positive testing rate is less than 1.0 percent.

Based upon this authority, and because the violation rate was below 0.5 percent for two consecutive years, the FHWA announced it was lowering the random alcohol testing rate for calendar year 1998 to 10 percent. The random controlled substances testing rate remained 50 percent. On January 14, 1998 (63 FR 2172) the agency published this policy in a notice including an extensive appendix C explaining the methodology used to estimate the controlled substances positive and alcohol violation rates.

Today's notice announces the results of data collected for the 1997 and 1998 FHWA Drug and Alcohol Surveys. These surveys, conducted annually, measure the percentage of CDL drivers testing positive for controlled substances (as defined in 49 CFR 40.21 of the Federal Motor Carrier Safety Regulations) and/or alcohol, based on both random and nonrandom testing. The survey data are collected from a random sample of motor carrier annual drug and alcohol testing summaries. Because the positive rate from random controlled substances testing has remained above 1.0 percent during this period, the FMCSA is maintaining the random controlled substance testing rate for calendar year 2000 at 50 percent, in accordance with 49 CFR 382.305(g). The FMCSA is also maintaining the random alcohol testing rate for calendar year 2000 at 10 percent, in accordance with 49 CFR 382.305(e)(1).

Authority: 49 U.S.C 504, 31136, chapter 313; and 49 CFR 1.73.

Issued on: May 18, 2000.

Julie Anna Cirillo,

Acting Deputy Administrator, Federal Motor Carrier Safety Administration.

[FR Doc. 00–13313 Filed 5–25–00; 8:45 am]

BILLING CODE 4910–22–P

DEPARTMENT OF TRANSPORTATION

Maritime Administration

[Docket No. MARAD–2000–7403]

Information Collection Available for Public Comments and Recommendations

ACTION: Notice and request for comments.

SUMMARY: In accordance with the Paperwork Reduction Act of 1995 (44 U.S.C. 3501 *et seq.*) this notice announces the Maritime Administration's (MARAD's) intentions to request Office of Management and Budget (OMB) approval to add a new survey form to the currently approved information collection titled ''Customer Service Surveys,'' OMB Number 2133–0528.

DATES: Comments should be submitted on or before July 25, 2000.

FOR FURTHER INFORMATION CONTACT: James J. Zok, Associate Administrator for Shipping Analysis and Cargo Preference, MAR–500, Room 8126, 400 Seventh Street, SW, Washington, D.C. 20590. Telephone 202–366–0364 or fax 202–366–7901. Copies of this collection can also be obtained from that office.

SUPPLEMENTARY INFORMATION:

Title of Collection: Customer Service Surveys.

Type of Request: Revision of a currently approved information collection.

OMB Control Number: 2133–0528.

Form Number: MA–1016; MA–1017; MA–1021.

Expiration Date of Approval: Three years from the date of approval.

Summary of Collection of Information: Executive Order 12862 requires agencies to survey customers to determine the kind and quality of services they want and the level of their satisfaction with existing services. This collection covers MARAD forms used to carry out such surveys covering MARAD programs and services.

Need and Use of the Information: (1) Responses to the ''Customer Service Questionnaire'' are needed to obtain prompt customer feedback on the quality of specific services/products provided to the customer by MARAD. The information provided will be used to ascertain the customer's level of satisfaction. (2) Responses to the ''Program Performance Survey'' are needed to obtain customers' views on MARAD's major programs and activities with which the customers were involved during the preceding year. (3) Responses to the new ''Conference/Exhibit Survey'' are needed to obtain feedback from conference attendees on the quality and success of a particular MARAD sponsored conference or event. The information provided will be used by MARAD's senior management and MARAD's program managers to monitor the overall level of customer satisfaction and to identify areas for improvement.

Description of Respondents: Individuals/entities directly served by MARAD.

Annual Responses: 6650 responses.

Annual Burden: 256 hours.

Comments: Comments should refer to the docket number that appears at the top of this document. Written comments may be submitted to the Docket Clerk, U.S. DOT Dockets, Room PL–401, 400 Seventh Street, SW, Washington, D.C. 20590. Comments may also be submitted by electronic means via the Internet at *http://dmses.dot.gov/submit.* Specifically, address whether this information collection is necessary for proper performance of the function of the agency and will have practical utility, accuracy of the burden estimates, ways to minimize this burden, and ways to enhance quality, utility, and clarity of the information to be collected. All comments received will be available for examination at the above address between 10 a.m. and 5 p.m., EDT. Monday through Friday,

except Federal Holidays. An electronic version of this document is available on the World Wide Web at http://dms.dot.gov.

Dated: May 22, 2000.

By Order of the Maritime Administrator.

Joel C. Richard,

Secretary.

[FR Doc. 00–13242 Filed 5–25–00; 8:45 am]

BILLING CODE 4910–81–P

DEPARTMENT OF TRANSPORTATION

Maritime Administration

Reports, Forms and Recordkeeping Requirements Agency Information Collection Activity Under OMB Review

AGENCY: Maritime Administration, DOT

ACTION: Notice and request for comments.

SUMMARY: In compliance with the Paperwork Reduction Act of 1995 (44 U.S.C. 3501 *et seq.*), this notice announces that the information collection abstracted below has been forwarded to the Office of Management and Budget (OMB) for review and comment. Described below is the nature of the information collection and its expected burden. The **Federal Register** notice with a 60-day comment period soliciting comments on the following collection was published on March 10, 2000 [65 FR 13075].

DATES: Comments must be submitted on or before June 26, 2000.

FOR FURTHER INFORMATION CONTACT: Otto A. Strassburg, Chief, Division of Marine Insurance, Office of Insurance and Shipping Analysis, MAR–570, Room 8117, Maritime Administration, 400 Seventh Street, SW, Washington, D.C. 20590, telephone number 202–366–4161. Copies of this collection can also be obtained from that office.

SUPPLEMENTARY INFORMATION: Maritime Administration.

Title of Collection: ''Approval of Underwriters for Marine Hull Insurance.''

OMB Control Number: 2133–0517.

Type of Request: Approval of an existing information collection.

Affected Public: Foreign underwriters of marine insurance and insurance brokers.

Form(s): None.

Abstract: This collection of information involves the approval of marine hull underwriters to insure MARAD program vessels. Foreign applicants will be requested to submit financial data upon which MARAD approval would be based. In certain cases, brokers would be required to certify that American underwriters were offered opportunity to compete for the business.

Annual Estimated Burden Hours: 46 hours.

Addressee: Send comments to the Office of Information and Regulatory Affairs, Office of Management and Budget, 725–17th Street, NW, Washington, DC 20503, Attention MARAD Desk Officer.

Comments are Invited on: Whether the proposed collection of information is necessary for the proper performance of the functions of the Department, including whether the information will have practical utility; the accuracy of the Department's estimate of the burden of the proposed information collection; ways to enhance the quality, utility and clarity of the information to be collected; and ways to minimize the burden of the collection of information on respondents, including the use of automated collection techniques or other forms of information technology. A comment to OMB is best assured of having its full effect if OMB receives it within 30 days of publication.

Dated: May 23, 2000.

Joel C. Richard,

Secretary, Maritime Administration.

[FR Doc. 00–13328 Filed 5–25–00; 8:45 am]

BILLING CODE 4910–81–P

DEPARTMENT OF TRANSPORTATION

National Highway Traffic Safety Administration

[Docket No. NHTSA 2000–7291; Notice 1]

General Motors Corporation; Receipt of Application for Determination of Inconsequential Non-Compliance

General Motors Corporation (GM) has applied to be exempted from the notification and remedy requirements of 49 U.S.C. Chapter 301 ''Motor Vehicle Safety'' for a noncompliance with Federal Motor Vehicle Safety Standard (FMVSS) No. 208, ''Occupant Crash Protection,'' on the basis that the noncompliance is inconsequential to motor vehicle safety. GM has filed a report of a noncompliance pursuant to 49 CFR part 573 ''Defects and Noncompliance Report.''

This notice of receipt of the application is published under 49 U.S.C. 30118 and 30120 and does not represent any agency decision or other exercise of judgement concerning the merits of the application.

Description of Noncompliance

GM has identified a condition in which the required seat belt audible signal on some 1996–99 Model Year Chevrolet Astro and GMC Safari vans may occasionally operate for less than the 4 to 8 second time required. Upon such occurrence, the signal would not fully comply with the audible signal portion of the S7.3 seat belt warning provision of FMVSS No. 208. GM has submitted a 49 CFR 573.5 noncompliance notification to the agency which details the affected vehicles. Pursuant to section 30118(d) and 30120(h) of Chapter 301 and 49 CFR part 556, and for reasons set forth, GM requested exemption from the notification, and remedy provisions of 49 U.S.C. 30118 and 30120 on the basis that the noncompliance is inconsequential to motor vehicle safety.

''A total of 461,851 1996–99 MY Chevrolet Astro and GMC Safari vans were built with an audible driver seat belt warning system that may, in a random manner (1) operate properly, (2) terminate the audible signal in less than the minimum 4 second requirement, or (3) not operate at all. The possibility of a random noncompliance results from a transient signal being generated at the seat belt switch input to the audible signal module when the ignition switch is turned to start and the belt latch mechanism is not fastened. The module may interpret this transient signal input as the seat belt latch mechanism being fastened and thereby terminate the audible tone. The condition is caused by a ground voltage difference between the seat belt switch and the signal module creating a transient signal that the module was not designed to filter. At the time the subject module and associated wiring harness were developed, GM truck engineering did not have a formal requirement for electrical grounding and module input filtering.''

''A new module and wiring harness were implemented at the assembly plant in January 1999, that changed this condition. To prevent this issue in the future, electrical grounding rules that define specific requirements for modules and their inputs have been implemented to evaluate all electrical ground designs during the design review process. This condition is not present in other GM vehicles with the same signal module because the respective component ground is compatible with the module design in other GM products. GM also has reviewed its warranty is information regarding the subject vehicle's audible signal. There has been no change in the

occurrences of customer warranty claims regarding the seat belt audible signal for the 1995 vehicles, produced prior to this issue, and the warranty claim made on the vehicles involved.''

Supporting Information Submitted by General Motors

It is GM's understanding that the purpose of the seat belt warning requirement is to provide a reminder to the vehicle's driver to wear a seat belt. Section 7.3 of FMVSS 208 currently allows a manufacturer two alternatives for complying with the seat belt warning requirements. As Option 1, S7.3(a)(1) essentially requires (1) an audible signal of 4 to 8 seconds, and (2) a minimum 60 second telltale light when the driver seat belt is unbuckled and the ignition is moved to the ''on'' or ''start'' position. If the driver seat belt is buckled, neither the audible signal nor the telltale light should be activated when the ignition is turned to the ''on'' or ''start'' position. As Option 2, S7.3 (a)(2) essentially requires (1) an audible signal of 4 to 8 seconds when the driver seat belt is unlocked and the ignition is moved to the ''on'' or ''start'' position, and (2) a 4 to 8 second telltale light whenever the ignition is moved to the ''on'' or ''start'' position, whether or not the driver seat belt is buckled.

The subject vehicles were designed to Option 1 and comply with the portion of the requirements to activate a continuous or flashing warning light for a minimum of 60 seconds if the ignition is turned to the ''on'' or ''start'' position and the driver seat belt is not buckled, thus notifying a driver that he/she is not buckled up. Specifically, the subject vehicles comply with this portion of the requirement by displaying a continuous warning light for approximately the first 20 seconds and then a flashing light for approximately 55 seconds if the driver belt is not buckled. The subject vehicles, therefore, provide a visual warning signal that exceeds the 60 second duration requirement of Option 2. Furthermore, the design duration of 75 seconds for the visual signal provides a considerable enhancement over the 4 to 8 second duration requirement allowed by Option 2.

GM believes that the subject vehicles provide an enhanced visual seat belt warning indicator to remind the driver to wear a seat belt. Under these particular conditions, GM believes that the noncompliance to S7.3 f FMVSS 208 is inconsequential as it relates to motor vehicle safety, and therefore, requests the affected vehicles exempted from the notification, recall and remedy provisions of Section 30120 of the Safety Act.

Interested persons are invited to submit written data, views and arguments on the petition of GM, described above. Comments should refer to the Docket Number and be submitted to: Docket Management, National Highway Traffic Safety Administration, Room PL 401, 400 7th Street, SW., Washington, DC 20590. It is requested that two copies be submitted.

All comments received before the close of business on the closing date indicated below will be considered. The application and supporting materials, and all comments received after the closing date will also be filed and will be considered to the extent practicable. When the application is granted or denied, a Notice will be published in the **Federal Register** pursuant to the authority indicated below.

Comment closing date: June 26, 2000.

(49 U.S.C. 30118, 30120; delegations of authority at 49 CFR 1.50 and 49 CFR 501.8)

Issued on: May 22, 2000.

Stephen R. Kratzke,

Associate Administrator for Safety Performance Standards.

[FR Doc. 00–13272 Filed 5–25–00; 8:45 am]

BILLING CODE 4910–59–P

DEPARTMENT OF TRANSPORTATION

Surface Transportation Board

[STB Docket No. AB–55 (Sub–No. 579X)]

CSX Transportation, Inc.—Abandonment Exemption—in Parke and Vermillion Counties, IN

CSX Transportation, Inc. (CSXT) has filed a notice of exemption under 49 CFR 1152 Subpart F—*Exempt Abandonments* to abandon an approximately 1.17-mile line of its railroad between milepost BD–191.41 at Montezuma and milepost BD–192.58 at Hillsdale in Parke and Vermillion Counties, IN. The line traverses United States Postal Service Zip Codes 47862 and 47854.

CSXT has certified that: (1) No local traffic has moved over the line for at least 2 years; (2) there is no overhead traffic on the line; (3) no formal complaint filed by a user of rail service on the line (or by a state or local government entity acting on behalf of such user) regarding cessation of service over the line either is pending with the Surface Transportation Board (Board) or with any U.S. District Court or has been decided in favor of complainant within the 2-year period; and (4) the requirements at 49 CFR 1105.7 (environmental reports), 49 CFR 1105.8 (historic reports), 49 CFR 1105.11 (transmittal letter), 49 CFR 1105.12 (newspaper publication), and 49 CFR 1152.50(d)(1) (notice to governmental agencies) have been met.

As a condition to this exemption, any employee adversely affected by the abandonment shall be protected under *Oregon Short Line R. Co.—Abandonment—Goshen,* 360 I.C.C. 91 (1979). To address whether this condition adequately protects affected employees, a petition for partial revocation under 49 U.S.C. 10502(d) must be filed. Provided no formal expression of intent to file an offer of financial assistance (OFA) has been received, this exemption will be effective on June 25, 2000, unless stayed pending reconsideration. Petitions to stay that do not involve environmental issues,[1] formal expressions of intent to file an OFA under 49 CFR 1152.27(c)(2),[2] and trail use/rail banking requests under 49 CFR 1152.29 must be filed by June 5, 2000. Petitions to reopen or requests for public use conditions under 49 CFR 1152.28 must be filed by June 15, 2000, with: Surface Transportation Board, Office of the Secretary, Case Control Unit, 1925 K Street, NW., Washington, DC 20423.

A copy of any petition filed with the Board should be sent to applicant's representative: Natalie S. Rosenberg, Counsel, CSX Transportation, Inc., 500 Water Street J150, Jacksonville, FL 32202. If the verified notice contains false or misleading information, the exemption is void *ab initio.*

CSXT has filed an environmental report which addresses the abandonment's effects, if any, on the environment and historic resources. The Section of Environmental Analysis (SEA) will issue an environmental assessment (EA) by May 31, 2000. Interested persons may obtain a copy of the EA by writing to SEA (Room 500, Surface Transportation Board, Washington, DC 20423) or by calling SEA, at (202) 565–1545. Comments on environmental and historic preservation matters must be filed within 15 days after the EA becomes available to the public.

Environmental, historic preservation, public use, or trail use/rail banking

---

[1] The Board will grant a stay if an informed decision on environmental issues (whether raised by a party or by the Board's Section of Environmental Analysis in its independent investigation) cannot be made before the exemption's effective date. *See Exemption of Out-of-Service Rail Lines,* 5 I.C.C.2d 377 (1989). Any request for a stay should be filed as soon as possible so that the Board may take appropriate action before the exemption's effective date.

[2] Each offer of financial assistance must be accompanied by the filing fee, which currently is set at $1000. *See* 49 CFR 1002.2(f)(25).

conditions will be imposed, where appropriate, in a subsequent decision.

Pursuant to the provisions of 49 CFR 1152.29(e)(2), CSXT shall file a notice of consummation with the Board to signify that it has exercised the authority granted and fully abandoned the line. If consummation has not been effected by CSXT's filing of a notice of consummation by May 26, 2001, and there are no legal or regulatory barriers to consummation, the authority to abandon will automatically expire.

Board decisions and notices are available on our website at ''WWW.STB.DOT.GOV.''

Decided: May 18, 2000.

By the Board, David M. Konschnik, Director, Office of Proceedings.

Vernon A. Williams,

Secretary.

[FR Doc. 00–13172 Filed 5–25–00; 8:45 am]

BILLING CODE 4915–00–P

Federal Register

Friday,
May 26, 2000

Part II

Environmental Protection Agency

40 CFR Part 63

National Emission Standards for Hazardous Air Pollutants: Solvent Extraction for Vegetable Oil Production; Proposed Rule

ENVIRONMENTAL PROTECTION AGENCY

40 CFR Part 63

[FRL–6703–4]

RIN 2060–AH22

National Emission Standards for Hazardous Air Pollutants: Solvent Extraction for Vegetable Oil Production

AGENCY: Environmental Protection Agency (EPA).

ACTION: Proposed rule.

SUMMARY: This action proposes national emission standards for hazardous air pollutants (NESHAP) for solvent extraction for vegetable oil production. This industry is comprised of facilities that produce crude vegetable oil and meal products by removing oil from listed oilseeds through direct contact with an organic solvent. The EPA has identified solvent extraction for vegetable oil production processes as major sources of a single hazardous air pollutant (HAP), n-hexane.

The EPA does not consider n-hexane classifiable as a human carcinogen. However, short-term exposure to high levels of n-hexane is reported to cause reactions such as irritations, dizziness, headaches, and nausea. Long-term exposure can cause permanent nerve damage.

This proposed rule will require all existing and new solvent extraction for vegetable oil production processes that are major sources (have the potential to emit 10 tons per year (tpy) or more of n-hexane) to meet HAP emission standards reflecting the application of the maximum achievable control technology (MACT). The EPA estimates that this proposed rule will reduce nationwide emissions of n-hexane from solvent extraction for vegetable oil production processes by approximately 6,800 tons per year (tpy). The emissions reductions achieved by these NESHAP, when combined with the emissions reductions achieved by other similar standards, will provide protection to the public and achieve a primary goal of the Clean Air Act (CAA).

DATES:

Comments. Submit comments on or before July 25, 2000.

Public Hearing. If anyone contacts the EPA requesting to speak at a public hearing by June 15, 2000, a public hearing will be held on June 26, 2000.

ADDRESSES:

Comments. Submit written comments (in duplicate if possible) to: Air and Radiation Docket and Information Center (6102), Attention Docket Number A–97–59, Room M–1500, U.S. Environmental Protection Agency, 1200 Pennsylvania Avenue, NW, Washington, DC 20460. The EPA requests a separate copy also be sent to the contact person listed in **FOR FURTHER INFORMATION CONTACT.** Be sure to include the docket number, A–97–59, on your comments.

Public Hearing. If a public hearing is held, it will be held at 10:00 a.m. in the EPA's Office of Administration Auditorium, Research Triangle Park, North Carolina, or at an alternate site nearby.

Docket. Docket No. A–97–59 contains supporting information used in developing the standards. The docket is located at the U.S. Environmental Protection Agency, 401 M Street, SW, Washington, DC 20460 in room M–1500, Waterside Mall (ground floor), and may be inspected from 8:30 a.m. to 5:30 p.m., Monday through Friday, excluding legal holidays.

FOR FURTHER INFORMATION CONTACT: Mr. James F. Durham, Waste & Chemical Processes Group, Emission Standards Division, (MD–13), U.S. Environmental Protection Agency, Research Triangle Park, North Carolina 27711; telephone number (919) 541–5672; facsimile number (919) 541–0246; electronic mail address ''durham.jim@epa.gov.''

SUPPLEMENTARY INFORMATION:

Comments. Comments and data may be submitted by electronic mail (e-mail) to: a-and-r-docket@epamail.epa.gov. Comments submitted by e-mail must be submitted as an ASCII file to avoid the use of special characters and encryption problems. Comments will also be accepted on disks in WordPerfect® version 5.1, 6.1, or 8 file format. All comments and data submitted in electronic form must note the docket number: A–97–59. No confidential business information (CBI) should be submitted by e-mail. Electronic comments may be filed online at many Federal Depository Libraries.

Commenters wishing to submit proprietary information for consideration must clearly distinguish such information from other comments and clearly label it as CBI. Send submissions containing such proprietary information directly to the following address, and not to the public docket, to ensure that proprietary information is not inadvertently placed in the docket: Attention: Mr. James F. Durham, c/o OAQPS Document Control Officer (Room 740B), U.S. Environmental Protection Agency, 411 W. Chapel Hill Street, Durham, NC 27701. The EPA will disclose information identified as CBI only to the extent allowed by the procedures set forth in 40 CFR part 2, subpart B. If no claim of confidentiality accompanies a submission when it is received by the EPA, the information may be made available to the public without further notice to the commenter.

Public Hearing. A request for a public hearing must be made by the date specified under the DATES section. Persons interested in presenting oral testimony or inquiring as to whether a hearing is to be held should contact Mr. James F. Durham via the information listed under **FOR FURTHER INFORMATION CONTACT** at least 2 days in advance of the public hearing. Persons interested in attending the public hearing must also call Mr. James F. Durham to verify the time, date, and location of the hearing. The public hearing will provide interested parties the opportunity to present data, views, or arguments concerning these proposed emission standards.

Docket. The docket is an organized and complete file of all the information considered in the development of this rulemaking. The docket is a dynamic file because material is added throughout the rulemaking process. The docketing system is intended to allow members of the public and industries involved to readily identify and locate documents so that they can effectively participate in the rulemaking process. Along with the proposed and promulgated standards and their preambles, the contents of the docket will serve as the record in the case of judicial review. (See section 307(d)(7)(A) of the CAA.) The regulatory text and other materials related to this rulemaking are available for review in the docket or copies may be mailed on request from the Air Docket by calling (202) 260–7548. A reasonable fee may be charged for copying docket materials.

World Wide Web (WWW). In addition to being available in the docket, an electronic copy of today's proposed rule will also be available on the WWW through the Technology Transfer Network (TTN). Following signature, a copy of the rule will be posted on the TTN's policy and guidance page for newly proposed or promulgated rules http://www.epa.gov/ttn/oarpg. The TTN provides information and technology exchange in various areas of air pollution control. If more information regarding the TTN is needed, call the TTN HELP line at (919) 541–5384.

Regulated Entities. If your facility produces vegetable oil from corn germ, cottonseed, flax, peanuts, rapeseed (for example, canola), safflower, soybeans, or sunflower, it may be a ''regulated entity.'' Categories and entities

potentially regulated by this action include:

Category	SIC code	NAICS	Examples of regulated entities
Industry	2074	311223	Cottonseed oil mills.
	2075	311222	Soybean oil mills.
	2076	311223	Other vegetable oil mills, excluding soybeans and cottonseed mills.
	2079	311223	Other vegetable oil mills, excluding soybeans and cottonseed mills.
	2048	311119	Prepared feeds and feed ingredients for animals and fowls, excluding dogs and cats.
	2041	311221	Flour and other grain mill product mills.
	2046	311221	Wet corn milling.
Federal government			Not affected.
State/local/tribal government			Not affected.

This table is not intended to be exhaustive, but rather a guide regarding entities likely to be regulated by this action. To determine whether your facility is regulated by this action, you should examine the applicability criteria in § 63.2832 of the proposed rule. If you have any questions regarding the applicability of this action to a particular entity, consult the person listed in the preceding **FOR FURTHER INFORMATION CONTACT** section.

Outline. The information presented in this preamble is organized as follows:

I. What is the subject and purpose of this rule?
A. What pollutant emissions will be reduced?
B. What are the health effects of these pollutants?
II. Am I subject to this rule?
III. Have these sources been regulated in the past?
IV. What procedures did we follow in developing the proposed rule?
V. What are the regulatory requirements for MACT?
VI. How was MACT determined?
VII. What are the proposed emission standards?
VIII. How do I demonstrate compliance?
IX. What are the recordkeeping requirements?
A. What is a plan for demonstrating compliance?
B. What is a startup, shutdown, and malfunction plan?
C. What data must I record?
X. What are the reporting requirements?
A. What notifications must I submit?
B. What reports must I submit?
XI. What are the environmental, energy, cost and economic impacts?
XII. What are the administrative requirements for this rule?
A. Executive Order 12866, Significant Regulatory Action
B. Executive Order 13132, Federalism
C. Executive Order 13084, Consultation and Coordination with Indian Tribal Governments
D. Executive Order 13045, Protection of Children from Environmental Health Risks and Safety Risks
E. Unfunded Mandates Reform Act of 1995
F. Regulatory Flexibility Act (RFA) as amended by the Small Business Regulatory Enforcement Fairness Act of 1996 (SBREFA), 5 U.S.C. 601 *et seq.*
G. Paperwork Reduction Act
H. National Technology Transfer and Advancement Act of 1995

I. What Is the Subject and Purpose of This Rule?

The CAA requires EPA to establish standards to control HAP emissions from source categories listed under the authority of section 112(c) of the CAA. An initial source category list was published in the **Federal Register** on July 16, 1992 (57 FR 31576), and it included the ''vegetable oil production'' source category. We have identified 106 existing facilities in the source category.

For purposes of the proposed rule, the title has been changed to ''solvent extraction for vegetable oil production'' to better describe the effected population. The source category list will be amended to reflect this name change in a separate action. For the remainder of this preamble and in the regulatory text, solvent extraction for vegetable oil production processes is called vegetable oil production processes.

The purpose of the proposed rule is to reduce HAP emissions, namely n-hexane, from major sources that produce vegetable oil. A major source is one with the potential to emit at least 10 tpy of any one HAP or 25 tpy of any combined HAP. We estimate that all 106 of the existing facilities are major sources of HAP emissions, and the baseline emissions of n-hexane from this source category are approximately 27,400 tpy. We estimate the proposed rule will reduce baseline HAP emissions from this source category by approximately 6,800 tpy (25 percent).

A. What Pollutant Emissions Will Be Reduced?

The predominate emissions from solvent extraction for vegetable oil production processes include n-hexane (a HAP) and volatile organic compounds (VOC). Currently, all existing solvent extraction for vegetable oil production processes use a hexane-based extraction solvent that consists primarily (on average 64 percent) of n-hexane, the only HAP. The remaining portion of the solvent consists of hexane isomers which are categorized as VOC. The proposed rule includes requirements to specifically reduce emissions of n-hexane. The process of controlling n-hexane emissions also reduces emissions of VOC.

B. What Are the Health Effects of These Pollutants?

Reported effects on humans from short-term exposure to high levels of n-hexane include irritation of eyes, mucous membranes, throat and skin, as well as impairment of the central nervous system (CNS) including dizziness, giddiness, headaches, and slight nausea. Long-term human exposure from inhalation is associated with a slowing of peripheral nerve signal conduction which causes numbness in the extremities and muscular weakness, as well as changes to the retina which causes blurred vision. Animal exposures to n-hexane have resulted in damage to nasal, respiratory tract, lung and peripheral nerve tissues, as well as effects on the CNS. No information is available on n-hexane effects on human reproduction or development. Limited laboratory animal data indicate a potential for testicular damage in adults, while several animal studies show no effect on fetal development. Due to a lack of information for humans and inadequate animal evidence, EPA does not consider n-hexane classifiable as to human carcinogenicity.

We recognize that the degree of adverse effects to human health from exposure to n-hexane can range from mild to severe. The extent and degree to which the human health effects may be experienced is dependent upon (1) the ambient concentration observed in the

area (as influenced by emission rates, meteorological conditions, and terrain); (2) the frequency of and duration of exposures; (3) characteristics of exposed individuals (genetics, age, preexisting health conditions, and lifestyle), which vary significantly with the population; and (4) pollutant-specific characteristics (toxicity, half-life in the environment, bioaccumulation, and persistence.)

The proposed rule reduces non-HAP VOC emissions as well. Emissions of VOC have been associated with a variety of health and welfare impacts. Volatile organic compound emissions, together with nitrogen oxides, are precursors to the formation of tropospheric ozone, or smog. Exposure to ambient ozone is responsible for a series of public health impacts, such as alterations in lung capacity; eye, nose, and throat irritation; nausea; and aggravation of existing respiratory disease. Ozone exposure can also damage forests and crops.

II. Am I Subject to This Rule?

The proposed rule applies to you if you own or operate any facility with a solvent extraction for vegetable oil production process that is a major source of HAP emissions and processes any combination of listed oilseed. Listed oilseeds refers only to the following agricultural products: corn germ, cottonseed, flax, peanut, rapeseed (for example, canola), safflower, soybean, or sunflower. A solvent extraction for vegetable oil production process is defined in § 63.2872 of the proposed rule as the collection of continuous process equipment and activities that produce crude vegetable oil and meal products by removing oil from listed oilseeds through direct contact with an organic solvent, such as a hexane isomer blend.

III. Have These Sources Been Regulated in the Past?

This is the first Federal regulation affecting air emissions from solvent extraction for vegetable oil production processes.

IV. What Procedures Did We Follow in Developing the Proposed Rule?

First, we identified the types of emission points within the source category that may potentially release HAP. A total of nine emission points were identified including:

(1) Exhaust from the mineral oil adsorber system;
(2) Exhaust from the meal dryer vent;
(3) Exhaust from the meal cooler vent;
(4) Residual losses from crude meal;
(5) Residual losses from crude oil;
(6) Evaporative losses from equipment leaks;
(7) Solvent storage tanks;
(8) Process wastewater collection; and
(9) process startup/shutdowns.

It is not practical from a cost standpoint to quantify losses of HAP from the individual emission points. However, total HAP emissions from the entire source can be determined using records of deliveries and inventories of solvent and oilseed. Thus, the regulatory format for the proposed rule was selected as an emission limit expressed in terms of gallons of HAP lost per ton of oilseed processed.

Next, we investigated possible differences in solvent retention characteristics in the meal among oilseed types and process operations which affect the achievable level of HAP emissions. Based on this investigation, we established 12 performance standards for both existing and new sources. The performance standards are based on the regulatory requirements in the CAA which are described in the next section. Finally, we developed procedures for determining regulatory alternatives for existing and new sources.

V. What Are the Regulatory Requirements for MACT?

The CAA requires a NESHAP to reflect the maximum degree of reduction in emissions of HAP that is achievable for new or existing sources. We refer to this control level as the maximum achievable control technology. The CAA also provides guidance on determining the least stringent level allowed for a MACT standard, the ''MACT floor.'' For existing sources, MACT floor standards must be no less stringent than the average emission limitation achieved by the best performing 12 percent of the existing sources, or by the best performing five sources for source categories or subcategories with fewer than 30 sources. For new sources, MACT floor standards must be no less stringent than the emission control achieved in practice by the best controlled similar source. Control levels more stringent than the MACT floor must reflect consideration of the cost of achieving the emission reductions, any nonair quality, health, and environmental impacts, and energy requirements.

VI. How Was MACT Determined?

For this proposed rule, the MACT performance level is an emission limit expressed in terms of gallons of HAP lost per ton of oilseed processed over a 12-month compliance period. Each of the 12 performance standards were determined from 2 years of monthly data relating solvent losses (gal) to oilseed processing rates (tons).

To address variability observed in the 2 years of data used in the MACT floor determinations, statistical procedures were applied. Varying climatic patterns from year-to-year affect oilseed quality and solvent retention characteristics which can directly affect facility operations. Two years of emissions and process information is not sufficient to characterize long-term impacts of climatic patterns on oilseed quality. The never-to-be-exceeded format of these proposed MACT standards required us to statistically examine variability over 2 years and make adjustments to the HAP loss performance level of each source to reflect long-term achievability.

For existing sources, the MACT floor for each of the 12 oilseed or process operations was determined as the average of the HAP loss performance levels corresponding to the top performing 12 percent of sources (or the top five for oilseeds or operations with fewer than 30 sources). For new sources, the MACT floor was based on the performance level corresponding to the top ranking source. The new source MACT floors are the same or slightly more stringent than the corresponding existing source MACT floors. More details on the MACT floor determinations can be found in the memorandum entitled ''MACT Floor Determinations for Existing and New Sources in the Vegetable Oil Production Source Category'' (Docket No. A–97–59).

We also considered a regulatory alternative more stringent than the MACT floor, but rejected it because of a significantly higher cost per ton of emission reductions. This above-the-floor option would have required a catalytic incinerator to control the HAP emissions in the combined exhaust from the meal dryer and cooler vents. A fabric filter would also be required to remove particulate matter in the exhaust stream prior to entering the catalytic incinerator. At present, solvent extraction for vegetable oil production processes have not installed such emission controls on meal dryer or cooler vents. Thus, the MACT floor performance level was determined to represent MACT for this regulation.

More details on the above-the-floor analysis can be found in the memorandum entitled ''Summary of Emission Reductions and Control Costs Associated with Achieving the MACT Floor and a Control Option Above the MACT Floor'' (Docket No. A–97–59).

VII. What Are the Proposed Emission Standards?

Separate emission standards are proposed for each oilseed or process operation because solvent retention in the meal differs for each oilseed and process type. The emission standards are presented in Table 1 in § 63.2840 of the proposed rule.

VIII. How Do I Demonstrate Compliance?

To demonstrate compliance, you must perform the following:

(1) Develop a plan for demonstrating compliance per § 63.2851 of the proposed rule.

(2) Develop a startup, shutdown, and malfunction (SSM) plan per § 63.2852 of the proposed rule.

(3) Maintain monthly records of solvent loss, HAP content of solvent received and quantity of oilseed type processed per § 63.2862(c) of the proposed rule.

(4) Comply with the standards for HAP losses as required in § 63.2840 of the proposed rule.

(5) Submit the necessary notifications per § 63.2860 of the proposed rule.

(6) Submit the necessary reports per § 63.2861 of the proposed rule.

IX. What Are the Recordkeeping Requirements?

A. What Is a Plan for Demonstrating Compliance?

Most vegetable oil production sources currently use reliable methods to measure the solvent loss and the quantity of oilseed processed. Therefore, today's proposed rule does not require you to change the method of measurement, but does require you to document each method of measurement and to consistently follow each documented method. You must develop a plan for demonstrating compliance which describes in detail how you will determine your solvent loss, HAP content of solvent received, and the quantity of each oilseed type processed. The plan for demonstrating compliance must be developed by the compliance date and must be kept on site and available for inspection as described in §§ 63.2851 and 63.2862(b) of the proposed rule.

B. What Is a Startup, Shutdown, and Malfunction Plan?

In accordance with the NESHAP General Provisions (40 CFR 63.6(e)(3)), you must develop a written startup, shutdown, and malfunction (SSM) plan that describes the exact procedures you will follow during each type of SSM to minimize HAP emissions. The SSM plan must be developed by the compliance date and must be kept on site and available for inspection as described in §§ 63.2852 and 63.2862(b) of the proposed rule. The SSM plan must be implemented during a malfunction period or an initial startup period as described in § 62.2850 of the proposed rule.

C. What Data Must I Record?

You must record all of the data necessary to determine your compliance ratio as described in § 63.2862 of the proposed rule. This includes all receipts and inventory records used to determine the monthly solvent loss, the HAP content of each shipment of solvent received, and the monthly quantity of oilseed processed. You must record the starting and ending dates of each malfunction period and initial startup period, and the activities during such periods to demonstrate that the procedures in the SSM plan were followed during each such period.

As described in § 63.2863 of the proposed rule, your records must be in a form suitable and readily available for review. You must also keep each record for 5 years following the date of each occurrence, measurement, maintenance, corrective action, report, or record. Records must remain on site for at least 2 years and then can be maintained offsite for the remaining 3 years.

X. What Are the Reporting Requirements?

A. What Notifications Must I Submit?

If you are an existing source, you must submit an ''initial notification'' within 120 days after promulgation of the rule stating whether you are a major or an area source of HAP and other information listed under § 63.2860 of the proposed rule. This initial submission notifies the Administrator that you have an affected major source and must comply with the rule as promulgated. These NESHAP does not apply to area sources. If you are a new or reconstructed source, you must make several notifications during the process of construction and startup according to § 63.9 of the General Provisions.

You must also submit a notification of compliance status no later than 60 days after your initial compliance determination. For existing sources, you would normally submit this notification 50 calendar months after promulgation of the rule (3 years for compliance, 1 year or 12 operating months to record data, and 2 calendar months to complete the report). For a new or reconstructed source, you normally submit this notification 20 calendar months after initial startup (6 calendar months for an initial startup period, 12 operating months to record data, and 2 calendar months to complete the report). The notification of compliance status identifies the source, lists the oilseed types processed, and certifies that you are in compliance.

B. What Reports Must I Submit?

According to § 63.2861 of the proposed rule, you are required to submit an annual report certifying that your source is in compliance. The first annual compliance certification is due 1 year, 12 calendar months, after the notification of compliance status.

If your compliance ratio exceeds one, you must submit a deviation notification report by the end of the month following the calendar month in which you determined the deviation.

If you have a malfunction period or an initial startup period, as described in § 63.2850 of the proposed rule, you must submit a periodic SSM report. If you followed the procedures in the SSM plan, the periodic SSM report is due by the end of the following month and certifies that the SSM plan was followed. You must also include in the report a description of the initial startup or malfunction event and an estimate of the solvent loss during the initial startup or malfunction period, as described in § 63.2861(c) of the proposed rule. If you did not follow the procedures in the SSM plan, you must notify the responsible agency within 2 days of the occurrence and submit an immediate SSM report within 7 days as described in § 63.2861(d) of the proposed rule.

XI. What Are the Environmental, Energy, Cost and Economic Impacts?

We do not expect any significant secondary air emission, wastewater, solid waste, or energy impacts resulting from the proposed rule. The emissions reduction techniques that will be used to comply with the NESHAP are pollution prevention technologies designed to recover and recycle solvent. More details on the environmental and energy impacts can be found in the memorandum entitled ''Summary of Environmental and Energy Impacts'' (Docket No. A–97–59).

As shown in Table 1 of this preamble, the overall cost effectiveness associated with the MACT floor level of control is $1,800 per ton of HAP. This level of control will reduce HAP emissions from existing sources by approximately 6,800 tpy, a reduction of approximately 25 percent.

Also shown in Table 1 of this preamble, we considered an option

more stringent than the MACT floor which requires installation of a fabric filter and catalytic incinerator. This option nearly doubles the reduction of HAP emissions achieved by the MACT floor. However, the cost effectiveness of the option above the MACT floor is approximately $13,800 per ton of HAP reduced. The cost effectiveness associated with the above-the-floor control option could be higher after considering site-specific conditions which may result in additional design, operating, and safety requirements that were not included in the model costs listed in Table 1 of this preamble. Because of the significantly higher cost per ton of emission reductions, we did not require control more stringent than the MACT floor. More details on the MACT floor and above-the-floor cost analysis can be found in the memorandum entitled ''Summary of Emission Reductions and Control Costs Associated with Achieving the MACT Floor and a Control Option Above the MACT Floor'' (Docket No. A–97–59).

TABLE 1.—SUMMARY OF NATIONAL IMPACTS FOR THE FLOOR AND ABOVE-THE-FLOOR CONTROL SCENARIOS

Control option	Emission reductions (tons/yr)		Overall emission reduction (percent)	Total capital investment (million $)	Annual monitoring, record-keeping, and report-ing cost (million $/yr)	Total annual cost (million $/yr)	Cost effectiveness ($/ton)	
	VOC	HAP					VOC	HAP
MACT floor	10,600	6,800	25	29.7	4.4	12.4	1,200	1,800
Above MACT floor total [a]	20,900	13,400	49	134.7	6.6	185.0	8,900	13,800

[a] The above the MACT floor control option includes the installation of a fabric filter and a catalytic incinerator to control the HAP in the exhaust from the meal dryer and cooler vents. The above the MACT floor total is the cumulative of impacts and costs associated with the MACT floor and the additional controls. The costs associated with the above the MACT floor control option could be higher than the costs listed in Table 1 of this preamble. Site-specific conditions at each source may result in additional design, operating, and safety requirements that were not included in the above model costs.

The economic impacts of the proposed rule for the vegetable oil industry are measured primarily in terms of market impacts. Market impacts include estimates of changes in market price, market production, industry annual revenues, and possible facility closures that may result from the proposed rule. Other secondary market impacts analyzed include potential labor market and international trade impacts.

The proposed rule will potentially impose emission control costs on facilities that use solvent extraction processes to extract oil from oilseeds. Oilseed processors using mechanical extraction will not incur emission control costs as a result of the proposed rule. In 1995, 31 companies operated 106 solvent extraction for vegetable oil production processing facilities in the United States. These companies process soybean, corn, cottonseed, and other seeds into oil, meal, and other products. The other oilseeds include flaxseed, peanut, rapeseed, safflower, and sunflower.

Emission control costs were estimated for each facility expected to be affected by the proposed rule. Two regulatory alternatives were analyzed; the MACT floor and a more stringent above-the-floor alternative. The capital costs for the proposed rule, the MACT floor, are estimated to be approximately $29.7 million, while national annualized costs of $12.4 million are anticipated. By comparison, the capital and annual cost estimates for the above-the-floor alternative are $134.7 million and $185.0 million, respectively. All costs are stated in 1995 dollars. The annualized cost estimates include: (1) The costs of monitoring, reporting, and recordkeeping; (2) annualized lost production costs; (3) operation and maintenance costs for the emission control equipment, less the cost savings from reduced solvent purchases; and (4) the annualized capital recovery for total capital emission control investment.

Since capital costs relate to emission control equipment that will be utilized over a period of years, this cost is annualized or apportioned to each year of the anticipated equipment life. The annual capital costs include annual depreciation of equipment plus the cost of capital associated with financing the capital equipment over its useful life. In addition, lost production costs are foregone profits and other costs incurred when the plant shuts down to install new capital equipment. These costs are a one time expense of the proposed rule and are annualized over the same period as the capital equipment. A 7 percent discount rate or cost of capital is assumed for this proposed rule. The annualized capital and lost production costs are combined with annual operating and maintenance costs (less solvent recovery credits) and recordkeeping, monitoring, and reporting costs to compute the total annualized costs to comply with the proposed rule.

A financial ratio analysis estimating the ratio of emission control costs to annual sales revenues (CSR) was conducted to determine the financial impact of the proposed rule for facilities anticipated to incur emission control costs. Annual facility revenues were estimated by multiplying the average 1995 market price reported by the United States Department of Agriculture by annual production levels for each facility. The individual facility financial impacts are expected to be minimal for the proposed regulatory alternative of the MACT floor. Of the 106 facilities affected by the proposed rule, 105 are predicted to have a facility CSR between 0 and 1 percent, and one facility has a CSR between 1 and 2 percent. For the above-the-floor alternative, 21 facilities have a CSR between 0 and 1 percent, 39 have a CSR between 1 and 2 percent, and 46 have a CSR between 2 and 3 percent.

A market-based approach was also used to evaluate the economic impacts of the proposed rule to producers and consumers of vegetable oil and meal products. This approach assumes that producers have choices when confronted with emission control costs. Producers must make a decision of whether to continue producing these products and, if so, the optimal level of production. The vegetable oil markets are assumed to be perfectly competitive.

In general, the economic impacts of this proposed rule are expected to be minimal with predicted price increases ranging from 0.14 percent to 0.47 percent for individual products. Estimated domestic production decreases resulting from the proposed rule range from 0.12 percent to 0.34 percent for all oil and meal products.

Revenues for the industry or the value of domestic shipments are expected to increase 0.10 percent. This increase in industry revenues results because the price elasticity of demand for vegetable oil and meal products is inelastic. For products with inelastic demand, a price increase leads to increases in revenues for the affected industry. Individual facilities within the industry may experience revenue increases or decreases, depending on their costs of production, but on average the industry revenues are anticipated to increase slightly with the proposed rule. No facilities are expected to close as a result of the proposed rule. Labor market impacts and international trade impacts are anticipated to be minimal also. More detailed information concerning the economic impacts of the proposed solvent extraction for vegetable oil production NESHAP can be found in the report entitled ''Economic Analysis of Air Pollution Regulations: Vegetable Oil Industry'' (Docket No. A–97–59).

XII. What Are the Administrative Requirements for This Rule?

A. Executive Order 12866, Significant Regulatory Action

Under Executive Order 12866 (58 FR 51735, October 4, 1993), we must determine whether the regulatory action is ''significant'' and therefore subject to review by the Office of Management and Budget (OMB). The Executive Order defines ''significant regulatory action'' as one that is likely to result in a rule that may:

(1) Have an annual effect on the economy of $100 million or more or adversely affect in a material way the economy, a sector of the economy, productivity, competition, jobs, the environment, public health or safety, or State, local, or tribal governments or communities;

(2) create a serious inconsistency or otherwise interfere with an action taken or planned by another agency;

(3) materially alter the budgetary impact of entitlements, grants, user fees, or loan programs, or the rights and obligations of recipients thereof; or

(4) raise novel legal or policy issues arising out of legal mandates, the President's priorities, or the principles set forth in the Executive Order.

It has been determined that this proposed rule is not a ''significant regulatory action'' under the terms of Executive Order 12866 and is therefore not subject to OMB review.

B. Executive Order 13132, Federalism

Executive Order 13132, entitled ''Federalism'' (64 FR 43255, August 10, 1999), requires EPA to develop an accountable process to ensure ''meaningful and timely input by State and local officials in the development of regulatory policies that have federalism implications.'' ''Policies that have federalism implications'' is defined in the Executive Order to include regulations that have ''substantial direct effects on the States, on the relationship between the national government and the States, or on the distribution of power and responsibilities among the various levels of government.'' Under Executive Order 13132, EPA may not issue a regulation that has federalism implications, that imposes substantial direct compliance costs, and that is not required by statute, unless the Federal government provides the funds necessary to pay the direct compliance costs incurred by State and local governments, or EPA consults with State and local officials early in the process of developing the proposed rule. The EPA also may not issue a regulation that has federalism implications and that preempts State law unless EPA consults with State and local officials early in the process of developing the proposed rule.

If EPA complies by consulting, Executive Order 13132 requires EPA to provide to the OMB, in a separately identified section of the preamble to the rule, a federalism summary impact statement (FSIS). The FSIS must include a description of the extent of EPA's prior consultation with State and local officials, a summary of the nature of their concerns and EPA's position supporting the need to issue the regulation, and a statement of the extent to which the concerns of State and local officials have been met. Also, when EPA transmits a draft final rule with federalism implications to OMB for review pursuant to Executive Order 12866, EPA must include a certification from its Federalism Official stating that EPA has met the requirements of Executive Order 13132 in a meaningful and timely manner.

This proposed rule will not have substantial direct effects on the States, on the relationship between the national government and the States, or on the distribution of power and responsibilities among the various levels of government, as specified in Executive Order 13132. This is because the proposed rule applies to affected sources in the vegetable oil production industry, not to States or local governments. Nor will State law be preempted, or any mandates be imposed on States or local governments. Thus, the requirements of section 6 of the Executive Order do not apply to this proposed rule. The EPA notes, however, that although not required to do so by this Executive Order (or otherwise) it did consult with State governments during development of this proposed rule.

C. Executive Order 13084, Consultation and Coordination With Indian Tribal Governments

Under Executive Order 13084, EPA may not issue a regulation that is not required by statute, that significantly or uniquely affects the communities of Indian tribal governments, and that imposes substantial direct compliance costs on those communities, unless the Federal government provides the funds necessary to pay the direct compliance costs incurred by the tribal governments, or EPA consults with those governments. If EPA complies by consulting, Executive Order 13084 requires EPA to provide to the OMB, in a separately identified section of the preamble to the rule, a description of the extent of EPA's prior consultation with representatives of affected tribal governments, a summary of the nature of their concerns, and a statement supporting the need to issue the regulation. In addition, Executive Order 13084 requires EPA to develop an effective process permitting elected officials and other representatives of Indian tribal governments ''to provide meaningful and timely input in the development of regulatory policies on matters that significantly or uniquely affect their communities.''

Today's proposed rule does not significantly or uniquely affect the communities of Indian tribal governments. No known vegetable oil production facility is located within the jurisdiction of any tribal government. Accordingly, the requirements of section 3(b) of Executive Order 13084 do not apply to this rule.

D. Executive Order 13045, Protection of Children From Environmental Health Risks and Safety Risks

Executive Order 13045: ''Protection of Children from Environmental Health Risks and Safety Risks'' (62 FR 19885, April 23, 1997) applies to any rule that: (1) Is determined to be ''economically significant'' as defined under Executive Order 12866, and (2) concerns an environmental health or safety risk that EPA has reason to believe may have a disproportionate effect on children. If the regulatory action meets both criteria, the Agency must evaluate the environmental health or safety effects of the planned rule on children, and explain why the planned regulation is preferable to other potentially effective

and reasonably feasible alternatives considered by the Agency.

This rule is not ''economically significant'' as defined under Executive Order 12866. Further, EPA interprets Executive Order 13045 as applying only to those regulatory actions that are based on health or safety risks, such that the analysis required under section 5–501 of the Executive Order has the potential to influence the regulation. This proposed rule is not subject to Executive Order 13045 because it establishes an environmental standard based on available technology rather than reduction of health risk. No children's risk analysis was performed because no alternative technologies exist that would provide greater stringency at a reasonable cost. Furthermore, this rule has been determined not to be ''economically significant'' as defined under Executive Order 12866.

E. Unfunded Mandates Reform Act of 1995

Title II of the Unfunded Mandates Reform Act of 1995 (UMRA), Public Law 104–4, establishes requirements for Federal agencies to assess the effects of their regulatory actions on State, local, and tribal governments and the private sector. Under section 202 of the UMRA, EPA generally must prepare a written statement, including a cost-benefit analysis, for proposed and final rules with ''Federal mandates'' that may result in expenditures by State, local, and tribal governments, in aggregate, or by the private sector, of $100 million or more in any 1 year. Before promulgating an EPA rule for which a written statement is needed, section 205 of the UMRA generally requires the EPA to identify and consider a reasonable number of regulatory alternatives and adopt the least-costly, most cost-effective, or least-burdensome alternative that achieves the objectives of the rule. The provisions of section 205 do not apply when they are inconsistent with applicable law. Moreover, section 205 allows the EPA to adopt an alternative other than the least-costly, most cost-effective, or least-burdensome alternative if the Administrator publishes with the final rule an explanation why that alternative was not adopted. Before the EPA establishes any regulatory requirements that may significantly or uniquely affect small governments, including tribal governments, it must have developed under section 203 of the UMRA a small government agency plan. The plan must provide for notifying potentially affected small governments, enabling officials of affected small governments to have meaningful and timely input in the development of EPA regulatory proposals with significant Federal intergovernmental mandates, and informing, educating, and advising small governments on compliance with the regulatory requirements.

The EPA has determined that this proposed rule does not contain a Federal mandate that may result in expenditures of $100 million or more for State, local, and tribal governments, in the aggregate, or the private sector in any 1 year. The maximum total annual cost of this proposed rule for any 1 year has been estimated to be less than $15 million. Thus, today's proposed rule is not subject to the requirements of sections 202 and 205 of the UMRA. In addition, EPA has determined that this proposed rule contains no regulatory requirements that might significantly or uniquely affect small governments because it contains no requirements that apply to such governments or impose obligations upon them. Therefore, today's proposed rule is not subject to the requirements of section 203 of the UMRA.

F. Regulatory Flexibility Act (RFA), As Amended by the Small Business Regulatory Enforcement Fairness Act of 1996 (SBREFA), 5 U.S.C. 601 et seq.

The RFA generally requires an agency to conduct a regulatory flexibility analysis of any rule subject to notice and comment rulemaking requirements unless the agency certifies that the rule will not have a significant economic impact on a substantial number of small entities. The proposed solvent extraction for vegetable oil production NESHAP will not have a significant economic impact on a substantial number of small entities. Small entities include small businesses, small not-for-profit enterprises, and small governmental jurisdictions.

For this regulation, the impacted small entities are businesses, and the Small Business Administration (SBA) defines the criteria used to designate a business as small. The relevant small business criteria are shown below.

TABLE 2.—AFFECTED INDUSTRY CLASSIFICATION CODES AND SMALL BUSINESS CRITERIA FOR THE SOLVENT EXTRACTION FOR VEGETABLE OIL PRODUCTION NESHAP

SIC	NAICS	Small business criteria (by SIC)
2046—Wet Corn Milling	311221—Wet Corn Milling	Fewer than 750 employees.
2041—Flour and Other Grain Mill Products	311221—Wet Corn Milling	Fewer than 500 employees.
2074—Cottonseed Oil Mills	311223—Other Oilseed Processing	Fewer than 500 employees.
2075—Soybean Oil Mills	311222—Soybean Processing	Fewer than 500 employees.
2076—Vegetable Oil Mills	311223—Other Oilseed Processing	Fewer than 1,000 employees.

Based upon these criteria, thirteen companies operating oilseed processing facilities are small businesses. These small businesses operated 16 vegetable oil processing facilities or 15 percent of the solvent extraction facilities in operation during 1995. Twelve of these 17 facilities were cottonseed processing mills indicating that 50 percent of the 25 cottonseed processing facilities operating in 1995 were operated by small businesses.

The EPA analyzed the potential impact of the proposed rule on these small entities. The EPA calculated the ratio of estimated annualized emission control costs relative to baseline 1995 sales revenue for each small company expected to be impacted by the proposed rule. While the CSR has different significance for different market situations, it is a good rough gauge of potential impact. If costs for the individual firm (or group of firms) are completely passed on to the purchasers of the good(s) being produced, the ratio is an estimate of the price increase (in percentage form after multiplying the ratio by 100). If costs are completely absorbed by the producer, this ratio is an estimate of the decrease in pretax profits (in percentage form after multiplying the ratio by 100). The distribution of cost to sales ratios across the whole market, the competitiveness of the market, and profit to sales ratios are among the obvious factors that may influence the significance of any particular cost to sales ratio for an individual facility. The mean or average CSR for small companies affected by the proposed rule is 0.29 percent, with

range of CSR from a low of 0.04 percent to a high estimate of 0.86 percent. As a result of the increased costs of emission controls, these firms will either likely increase the price of their products in response to a market change in price, will absorb the cost increase with no price increase, or will respond with a combination of these responses. Since the estimated costs as a percentage of sales is relatively minimal for the affected small oilseed processing companies, it is anticipated that the proposed rule will not have a significant impact on the affected companies' profitability.

Many cottonseed processing facilities are owned by small businesses. Nine of the 25 cottonseed processing facilities have ceased operation or are currently dormant subsequent to the baseline year of 1995. These factors prompted an additional analysis to determine whether cottonseed processing facilities will experience significant economic impacts as a result of the proposed rule. For this analysis, the estimated costs of emission controls for an individual facility were compared to the estimated 1995 sales revenue for that facility to estimate facility-specific cost to sales ratios. A CSR exceeding 1 percent was determined to be an indicator of the potential for a significant economic impact for cottonseed processing facilities. For the eight cottonseed processing facilities currently operating that are owned by small businesses, the average CSR is 0.39 percent with a high-low range of 0.08 to 0.86 percent. These estimated costs as a percent of sales are less than 1 percent indicating that significant economic impacts are not likely for the cottonseed facilities owned by small businesses as a result of the proposed rule. Thus, EPA has concluded that this proposed rule will not have a significant impact on a substantial number of small entities.

G. Paperwork Reduction Act

The information collection requirements in this proposed rule will be submitted for approval to the OMB under the Paperwork Reduction Act, 44 U.S.C. 3501 *et seq.* An Information Collection Request (ICR) document has been prepared by EPA (ICR No. 1947–01) and a copy may be obtained from Sandy Farmer by mail at the U.S. Environmental Protection Agency, Office of Environmental Information, Collection Strategies Division (2822), 1200 Pennsylvania Avenue NW., Washington, DC 20460, by e-mail at farmer.sandy@epa.gov, or by calling (202) 260–2740. A copy may also be downloaded off the internet at http://www.epa.gov/icr. The information requirements are not effective until OMB approves them.

The information requirements are based on notification, recordkeeping, and reporting requirements in the NESHAP General Provisions (40 CFR part 63, subpart A), which are mandatory for all operators subject to national emission standards. These recordkeeping and reporting requirements are specifically authorized by section 114 of the CAA (42 U.S.C. 7414). All information submitted to the EPA pursuant to the recordkeeping and reporting requirements for which a claim of confidentiality is made is safeguarded according to EPA policies set forth in 40 CFR part 2, subpart B.

The total 3-year burden of monitoring, recordkeeping, and reporting for this collection is estimated at 30,275 labor hours, and the annual average burden is 10,092 labor hours for the affected facilities. There are no required capital costs for the proposed solvent extraction for vegetable oil production NESHAP. This estimate includes initial notification(s), plan for demonstrating compliance, SSM plan, notification of compliance status, monthly inventory recordkeeping, monthly determination of the compliance ratio, annual compliance certifications, deviation notification reports, periodic SSM reports, and immediate SSM reports for each of the 106 existing sources and one new source per year from proposal.

Burden means the total time, effort, or financial resources people spend to generate, maintain, keep, or disclose to or for a Federal agency. This includes the time needed to review instructions; develop, acquire, install, and use technology and systems to collect, validate, and verify information; process, maintain, disclose, and provide information; adjust ways to comply with any previously applicable instructions and requirements; train people to respond to a collection of information; search data sources; collect and review information; and transmit or otherwise disclose the information.

An agency may not conduct or sponsor, and a person is not required to respond to, a collection of information unless it displays a currently valid OMB control number. The OMB control numbers for EPA's regulations are in 40 CFR part 9 and 48 CFR chapter 15.

H. National Technology Transfer and Advancement Act of 1995

Under section 12(d) of the National Technology Transfer and Advancement Act (NTTAA) of 1995 (Publication L. No. 104–113), all Federal agencies are required to use voluntary consensus standards in their regulatory and procurement activities unless to do so would be inconsistent with applicable law or otherwise impractical. Voluntary consensus standards are technical standards (*e.g.*, materials specifications, test methods, sampling procedures, business practices) developed or adopted by one or more voluntary consensus bodies. The NTTAA requires Federal agencies to provide Congress, through annual reports to the Office of Management and Budget (OMB), with explanations when an agency does not use available and applicable voluntary consensus standards.

Consistent with the NTTAA, the EPA conducted a search for EPA's Method 311 (Analysis of Hazardous Air Pollutant Compounds in Paints and Coatings by Direct Injection into a Gas Chromatograph) and found no candidate voluntary consensus standards for use in identifying n-hexane. This proposal references the National Emission Standards for Closed Vent Systems, Control Devices, Recovery Devices, and Routing to a Fuel Gas System or a Process (Subpart SS). Since there are no new technical standard requirements resulting from specifying Subpart SS in this rule, and no candidate consensus standards were identified for EPA Method 311 (n-hexane) in this proposal, EPA is not proposing/adopting any voluntary consensus standards in this rulemaking.

EPA takes comment on proposed compliance demonstration requirements proposed in this rulemaking and specifically invites the public to identify potentially-applicable voluntary consensus standards. Commentors should also explain why this regulation should adopt these VCS's in lieu of EPA's standards. Emission test methods and performance specifications submitted for evaluation should be accompanied with a basis for the recommendation, including method validation data and the procedure used to validate the candidate method (if method other than Method 301, 40 CFR Part 63, Appendix A was used).

Section 63.2854(b)(1) of the proposed standard lists EPA Method 311. EPA Method 311 has been used by States and industry for approximately five years. Nevertheless, under § 63.7(f) of Subpart A of this part, the proposal allows any State or source to apply to EPA for permission to use an alternative method in lieu of EPA Method 311 listed in § 63.2854(b)(1).

List of Subjects in 40 CFR Part 63

Environmental protection, Administrative practice and procedure, Air pollution control, Hazardous substances, Intergovernmental relations,

Reporting and recordkeeping requirements.

Dated: May 12, 2000.

Carol M. Browner,

Administrator.

For the reasons stated in the preamble, title 40, chapter I, part 63, of the Code of the Federal Regulations is proposed to be amended as follows:

PART 63—[AMENDED]

1. The authority citation for part 63 continues to read as follows:

Authority: 42 U.S.C. 7401, *et seq.*

2. Part 63 is amended by adding subpart GGGG to read as follows:

Subpart GGGG—National Emission Standards for Hazardous Air Pollutants: Solvent Extraction for Vegetable Oil Production

Sec.

What This Subpart Covers

63.2830 What is the purpose of this subpart?
63.2831 Where can I find definitions of key words used in this subpart?
63.2832 Am I subject to this subpart?
63.2833 Is my source categorized as existing or new?
63.2834 When do I have to comply with the standards in this subpart?

Standards

63.2840 What emission requirements must I meet?

Compliance Requirements

63.2850 How do I comply with the hazardous air pollutant (HAP) emission standards?
63.2851 What is a plan for demonstrating compliance?
63.2852 What is a startup, shutdown, and malfunction plan?
63.2853 How do I determine the actual solvent loss?
63.2854 How do I determine the weighted average volume fraction of HAP in the actual solvent loss?
63.2855 How do I determine the quantity of oilseed processed?

Notifications, Reports, and Records

63.2860 What notifications must I submit and when?
63.2861 What reports must I submit and when?
63.2862 What records must I keep?
63.2863 In what form and how long must I keep my records?

Other Requirements and Information

63.2870 What parts of the General Provisions apply to me?
63.2871 Who administers this subpart?
63.2872 What definitions apply to this subpart?

Subpart GGGG—National Emission Standards for Hazardous Air Pollutants: Solvent Extraction for Vegetable Oil Production

What This Subpart Covers

§ 63.2830 What is the purpose of this subpart?

This subpart establishes national emission standards for hazardous air pollutants (NESHAP) emitted during vegetable oil production. These standards limit HAP emissions from specified vegetable oil production processes. This subpart also establishes requirements to demonstrate initial and continuous compliance with the emission standards.

§ 63.2831 Where can I find definitions of key words used in this subpart?

You can find definitions of key words used in this subpart in the sources listed in paragraphs (a) through (c) of this section:

(a) The Clean Air Act, section 112(a).

(b) The NESHAP General Provisions in § 63.2.

(c) In § 63.2872 of this subpart.

§ 63.2832 Am I subject to this subpart?

(a) You are an affected source subject to this subpart if you meet all of the criteria listed in paragraphs (a)(1) and (a)(2) of this section:

(1) You own or operate a vegetable oil production process that is a major source of HAP emissions or is collocated within a plant site with other sources that are individually or collectively a major source of HAP emissions.

(i) A *vegetable oil production process* is defined in § 63.2872. In general, it is the collection of continuous process equipment and activities that produce crude vegetable oil and meal products by removing oil from oilseeds listed in Table 1 in § 63.2840 through direct contact with an organic solvent, such as a hexane isomer blend.

(ii) A major source of HAP is a plant site that emits or has the potential to emit any single HAP at a rate of 10 tons (9.07 megagrams) or more per year or any combination of HAP at a rate of 25 tons (22.68 megagrams) or more per year.

(2) Your vegetable oil production process processes any combination of eight types of oilseeds listed in paragraphs (a)(2)(i) through (viii) of this section:

(i) Corn germ;

(ii) Cottonseed;

(iii) Flax;

(iv) Peanut;

(v) Rapeseed (for example, canola);

(vi) Safflower;

(vii) Soybean; and

(viii) Sunflower.

(b) You are not subject to this subpart if your vegetable oil production process meets any of the criteria listed in paragraphs (b)(1) through (3) of this section:

(1) It uses only mechanical extraction techniques that use no organic solvent to remove oil from a listed oilseed.

(2) It uses only batch solvent extraction and batch desolventizing equipment.

(3) It processes only agricultural products that are not listed oilseeds as defined in § 63.2872.

§ 63.2833 Is my source categorized as existing or new?

(a) This subpart applies to each existing and new affected source. You must categorize your vegetable oil production process as either an existing or new source in accordance with the criteria in Table 1 of this section, as follows:

TABLE 1 OF § 63.2833.—CATEGORIZING YOUR SOURCE AS EXISTING OR NEW

If your affected source . . .	And if . . .	Then your affected source . . .
1. Was constructed or began construction before May 26, 2000.	reconstruction has not occurred	is an existing source.
2. Began reconstruction, as defined in § 63.2, on or after May 26, 2000.	reconstruction was part of a scheduled plan to comply with the existing source requirements of this subpart and reconstruction was completed no later than 3 years after the effective date of this subpart.	remains an existing source.
3. Began a significant modification, as defined in § 63.2872, at any time on an existing source.	the modification does not constitute reconstruction.	remains an existing source.

TABLE 1 OF § 63.2833.—CATEGORIZING YOUR SOURCE AS EXISTING OR NEW—Continued

If your affected source . . .	And if...	Then your affected source . . .
4. Began a significant modification, as defined in § 63.2872, at any time on a new source.	the modification does not constitute reconstruction.	remains a new source.
5. Began reconstruction on or after May 26, 2000.	reconstruction was completed later than 3 years after the effective date of this subpart.	is a new source.
6. Began construction on or after May 26, 2000.	.....	is a new source.

(b) *Reconstruction of a source.* Any affected source is reconstructed if components are replaced so that the criteria in the definition of *reconstruction* in § 63.2 are satisfied. In general, a vegetable oil production process is reconstructed if the fixed capital cost of the new components exceeds 50 percent of the fixed capital cost for constructing a new vegetable oil production process, and it is technically and economically feasible for the reconstructed source to meet the relevant new source standard established in this subpart. The effect of reconstruction on the categorization of your existing and new affected source is described in paragraphs (b)(1) and (b)(2) of this section:

(1) After reconstruction of an existing source, the affected source is recategorized as a new source and becomes subject to the new source requirements of this subpart.

(2) After reconstruction of a new source, the affected source remains categorized as a new source and remains subject to the new source requirements of this subpart.

(c) *Significant modification of a source.* A significant modification to an affected source is a term specific to this subpart and is defined in § 63.2872.

(1) In general, a significant modification to your source consists of adding new equipment or the modification of existing equipment within the affected source that significantly affects solvent losses from the affected source. Examples include adding or replacing extractors, desolventizer-toasters (conventional and specialty), and meal dryer-coolers. All other significant modifications must meet the criteria listed in paragraphs (c)(1)(i) and (1) (ii) of this section:

(i) The fixed capital cost of the modification represents a significant percentage of the fixed capital cost of building a comparable new vegetable oil production process.

(ii) It does not constitute reconstruction as defined in § 63.2.

(2) A significant modification has no effect on the categorization of your source as existing and new. An existing source remains categorized as an existing source and subject to the existing source requirements of this subpart. A new source remains categorized as a new source and subject to the new source requirements of this subpart.

(d) Changes in the type of oilseed processed by your affected source does not affect the categorization of your source as new or existing. Recategorizing an affected source from existing to new occurs only when you add or modify process equipment within the source which meets the definition of *reconstruction.*

§ 63.2834 When do I have to comply with the standards in this subpart?

You must comply with the standards in accordance with one of the schedules in Table 1 of this section, as follows:

TABLE 1 OF § 63.2834.—COMPLIANCE DATES FOR EXISTING AND NEW SOURCES

If your affected source is categorized as . . .	And if . . .	Then your compliance date is . . .
1. An existing source	.....	3 years after [the effective date of this subpart].
2. A new source	you startup your affected source before [the effective date of this subpart].	[the effective date of this subpart].
3. A new source	you startup your affected source on or after [the effective date of this subpart].	your startup date.

Standards

§ 63.2840 What emission requirements must I meet?

(a)(1) The emission requirements limit the number of gallons of HAP lost per ton of listed oilseeds processed. For each operating month, you must calculate a compliance ratio which compares your actual HAP loss to your allowable HAP loss for the previous 12 operating months as shown in Equation 1 of this section. An operating month, as defined in § 63.2872, is any calendar month in which a source processes a listed oilseed, excluding any entire calendar month in which the source operated under an initial startup period subject to § 63.2850(c)(2) or (d)(2) or a malfunction period subject to § 63.2850(e)(2). Equation 1 of this section follows:

$$\text{Compliance Ratio} = \frac{\text{Actual HAP Loss}}{\text{Allowable HAP Loss}} \qquad \text{(Eq. 1)}$$

(2) Equation 1 of this section can also be expressed as a function of total solvent loss as show in Equation 2 of the section, as follows:

$$\text{Compliance Ratio} = \frac{f * \text{Actual Solvent Loss}}{0.64 * \sum_{i=1}^{n}\left((\text{Oilseed})_i * (\text{SLF})_i\right)} \qquad \text{(Eq. 2)}$$

Where:

f = The weighted average volume fraction of HAP in solvent received during the previous 12 operating months, as determined in § 63.2854, dimensionless.

0.64 = The average volume fraction of HAP in solvent in the baseline performance data, dimensionless.

Actual Solvent Loss = Gallons of actual solvent loss during previous 12 operating months, as determined in § 63.2853.

Oilseed = Tons of each oilseed type ''i'' processed during the previous 12 operating months, as shown in § 63.2855.

SLF = The corresponding solvent loss factor (gal/ton) for oilseed ''i'' listed in Table 1 of this section, as follows:

TABLE 1 OF § 63.2840.—OILSEED SOLVENT LOSS FACTORS FOR DETERMINING ALLOWABLE HAP LOSS

Type of oilseed process	A source that . . .	Oilseed solvent loss factor (gal/ton)	
		Existing sources	New sources
1. Corn Germ, Wet Milling	processes corn germ that has been separated from other corn components using a ''wet'' process of centrifuging a slurry steeped in a dilute sulfurous acid solution.	0.4	0.3
2. Corn Germ, Dry Milling	processes corn germ that has been separated from the other corn components using a ''dry'' process of mechanical chafing and air sifting.	0.7	0.7
3. Cottonseed, Large	processes 120,000 tons or more of a combination of cottonseed and other listed oilseeds during all normal operating periods in a 12 operating month period.	0.5	0.4
4. Cottonseed, Small	processes less than 120,000 tons of a combination of cottonseed and other listed oilseeds during all normal operating periods in a 12 operating month period.	0.7	0.4
5. Flax	processes flax	0.6	0.6
6. Peanuts	processes peanuts	1.2	0.7
7. Rapeseed	processes rapeseed	0.7	0.3
8. Safflower	processes safflower	0.7	0.7
9. Soybean, Conventional	uses a conventional style desolventizer to produce crude soybean oil products and soybean animal feed products.	0.2	0.2
10. Soybean, Specialty	uses a special style desolventizer to produce soybean meal products for human and animal consumption.	1.7	1.5
11. Soybean, Combination Plant with Low Specialty Production.	processes soybeans in both specialty and conventional desolventizers and the quantity of soybeans processed in specialty desolventizers during normal operating periods is less than 3.3 percent of total soybeans processed during all normal operating periods in a 12 operating month period. The corresponding solvent loss factor is an overall value and applies to the total quantity of soybeans processed.	0.25	0.25
12. Sunflower	processes sunflower	0.4	0.3

(b) When your source has processed listed oilseed for 12 operating months, calculate the compliance ratio by the end of each calendar month following an operating month using Equation 2 of this section. When calculating your compliance ratio, consider the conditions and exclusions in paragraphs (b)(1) through (6) of this section:

(1) If your source processes any quantity of listed oilseeds in a calendar month and the source is not operating under an initial startup period or malfunction period subject to § 63.2850, then you must categorize the month as an operating month, as defined in § 63.2872.

(2) The 12-month compliance ratio may include operating months occurring prior to a source shutdown and operating months that follow after the source resumes operation.

(3) If your source shuts down and processes no listed oilseed for an entire calendar month, then you must categorize the month as a nonoperating month, as defined in § 63.2872. Exclude any nonoperating months from the compliance ratio determination.

(4) If your source is subject to an initial startup period as defined in § 63.2872, exclude from the compliance ratio determination any solvent and oilseed information recorded for the initial startup period.

(5) If your source is subject to a malfunction period as defined in § 63.2872, exclude from the compliance ratio determination any solvent and oilseed information recorded for the malfunction period.

(6) For sources processing cottonseed or specialty soybean, the solvent loss factor you use to determine the compliance ratio may change each operating month depending on the tons of oilseed processed during all normal operating periods in a 12 operating month period.

(c) If the compliance ratio is less than or equal to 1.00, your source was in compliance with the HAP emission requirements for the previous operating month.

(d) To determine the compliance ratio in Equation 2 of this section, you must select the appropriate oilseed solvent loss factor from Table 1 of this section. First, determine whether your source is new or existing using Table 1 in § 63.2833. Then, under the appropriate existing or new source column, select the oilseed solvent loss factor that corresponds to each type oilseed or process operation for each operating month.

Compliance Requirements

§ 63.2850 How do I comply with the HAP emission standards?

(a) *General requirements.* The requirements in paragraphs (a)(1)(i) through (iv) of this section apply to all affected sources:

(1) Submit the necessary notifications in accordance with § 63.2860, which include:

(i) Initial notifications for existing sources.

(ii) Initial notifications for new and reconstructed sources.

(iii) Initial notifications for significant modifications to existing or new sources.

(iv) Notification of compliance status.

(2) Develop and implement a plan for demonstrating compliance in accordance with § 63.2851.

(3) Develop a written startup, shutdown and malfunction (SSM) plan in accordance with the provisions in § 63.2852.

(4) Maintain all the necessary records you have used to demonstrate compliance with this subpart in accordance with § 63.2862.

(5) Submit the reports in paragraphs (a)(5)(i) through (iii) of this section:

(i) Annual compliance certifications in accordance with § 63.2861(a).

(ii) Periodic startup, shutdown, and malfunction reports in accordance with § 63.2861(c).

(iii) Immediate startup, shutdown, and malfunction reports in accordance with § 63.2861(d).

(6) Submit all notifications and reports and maintain all records required by the General Provisions for performance testing if you add a control device that destroys solvent.

(b) *Existing sources under normal operation.* You must meet all of the requirements listed in paragraph (a) of this section and Table 1 of this section for sources under normal operation, and the schedules for demonstrating compliance for existing sources under normal operation in Table 2 of this section.

(c) *New sources.* Your new source, including a source that is categorized as new due to reconstruction, must meet the requirements associated with one of two compliance options. Within 15 days of the startup date, you must choose to comply with one of the options listed in paragraph (c)(1) or (c)(2) of this section:

(1) *Normal operation.* Upon startup of your new source, you must meet all of the requirements listed in § 63.2850(a) and Table 1 of this section for sources under normal operation, and the schedules for demonstrating compliance for new sources under normal operation in Table 2 of this section.

(2) *Initial startup period.* For up to 6 calendar months after the startup date of your new source, you must meet all of the requirements listed in paragraph (a) of this section and Table 1 of this section for sources operating under an initial startup period, and the schedules for demonstrating compliance for new sources operating under an initial startup period in Table 2 of this section. After a maximum of 6 calendar months, your new source must then meet all of the requirements listed in Table 1 of this section for sources under normal operation.

(d) *Existing or new sources that have been significantly modified.* Your existing or new source that has been significantly modified must meet the requirements associated with one of two compliance options. Within 15 days of the modified source startup date, you must choose to comply with one of the options listed in paragraph (d)(1) or (d)(2) of this section:

(1) *Normal operation.* Upon startup of your significantly modified existing or new source, you must meet all of the requirements listed in paragraph (a) and Table 1 of this section for sources under normal operation, and the schedules for demonstrating compliance for an existing or new source that has been significantly modified in Table 2 of this section.

(2) *Initial startup period.* For up to 3 calendar months after the startup date of your significantly modified existing or new source, you must meet all of the requirements listed in paragraph (a) and Table 1 of this section for sources operating under an initial startup period, and the schedules for demonstrating compliance for a significantly modified existing or new source operating under an initial startup period in Table 2 of this section. After a maximum of 3 calendar months, your new or existing source must meet all of the requirements listed in Table 1 of this section for sources under normal operation.

(e) *Existing or new sources experiencing a malfunction.* A *malfunction* is defined in § 63.2. In general, it means any sudden, infrequent, and not reasonably preventable failure of air pollution control equipment or process equipment to function in a usual manner. If your existing or new source experiences an unscheduled shutdown as a result of a malfunction, continues to operate during a malfunction (including the period reasonably necessary to correct the malfunction), or starts up after a shutdown resulting from a malfunction, then you must meet the requirements associated with one of two compliance options. Routine or scheduled process startups and shutdowns resulting from, but not limited to, market demands, maintenance activities, and switching types of oilseed processed, are not startups or shutdowns resulting from a malfunction and, therefore, do not qualify for this provision. Within 15 days of the beginning date of the malfunction, you must choose to comply with one of the options listed in paragraphs (e)(1) through (e)(2) of this section:

(1) *Normal operation.* Your source must meet all of the requirements listed in paragraph (a) of this section and one of the options listed in paragraphs (e)(1)(i) through (iii) of this section:

(i) Existing source normal operation requirements in paragraph (b) of this section.

(ii) New source normal operation requirements in paragraph (c)(1) of this section.

(iii) Normal operation requirements for sources that have been significantly modified in paragraph (d)(1) of this section. Table 1 of this section follows:

TABLE 1 OF § 63.2850.—REQUIREMENTS FOR COMPLIANCE WITH HAP EMISSION STANDARDS

Are you required to . . .	For periods of normal operation?	For initial startup periods subject to § 63.28590(c)(2) or (d)(2)?	For malfunction periods subject to § 63.2850(e)(2)?
1. Operate and maintain your source in accordance with your SSM plan as described in § 63.2852?	No, your source is not subject to the SSM plan, but rather the HAP emission limits of this standard.	Yes, throughout the entire initial startup period.	Yes, throughout the entire malfunction period.
2. Determine and record the extraction solvent loss in gallons from your source?	Yes, as described in § 63.2853.	Yes, as described in § 63.2862(e) ..	Yes, as described in § 63.2862(e).

TABLE 1 OF § 63.2850.—REQUIREMENTS FOR COMPLIANCE WITH HAP EMISSION STANDARDS—Continued

Are you required to . . .	For periods of normal operation?	For initial startup periods subject to § 63.28590(c)(2) or (d)(2)?	For malfunction periods subject to § 63.2850(e)(2)?
3. Record the volume fraction of HAP present at greater than 1 percent by volume and gallons of extraction solvent in shipment received?	Yes	Yes	Yes.
4. Determine and record the tons of each oilseed type processed by your source?	Yes, as described in § 63.2855.	No	No.
5. Determine the weighted average volume fraction of HAP in extraction solvent received as described in § 63.2854 by the end of the following calendar month?	Yes	No. Except for solvent received by a new or reconstructed source commencing operation under an initial startup period, the HAP volume fraction in any solvent received during an initial startup period is included in the weighted average HAP determination for the next operating month.	No, the HAP volume fraction in any solvent received during a malfunction period is included in the weighted average HAP determination for the next operating month.
6. Determine and record the actual solvent loss, weighted average volume fraction HAP, oilseed processed and compliance ratio for each 12 operating month period as described in § 63.2840 by the end of the following calendar month?	Yes	No, these requirements are not applicable because your source is not required to determine the compliance ratio with data recorded for an initial startup period.	No, these requirements are not applicable because your source is not required to determine the compliance ratio with data recorded for a malfunction period.
7. Submit a Notification of Compliance Status or Annual Compliance Certification as appropriate?	Yes, as described in §§ 63.2860(d) and 63.2861(a).	No. However, you may be required to submit an annual compliance certification for previous operating months, if the deadline for the annual compliance certification happens to occur during the initial startup period.	No. However, you may be required to submit an annual compliance certification for previous operating months, if the deadline for the annual compliance certification happens to occur during the malfunction period.
8. Submit a Deviation Notification Report by the end of the calendar month following each operating month in which the compliance ratio exceeds 1.00 as described in § 63.2861(b)?	Yes	No, these requirements are not applicable because your source is not required to determine the compliance ratio with data recorded for an initial startup period.	No, these requirements are not applicable because your source is not required to determine the compliance ratio with data recorded for a malfunction period.
9. Submit a Periodic SSM Report as described in § 63.2861(c)?	No, a SSM activity is not categorized as normal operation.	Yes	Yes.
10. Submit an Immediate SSM Report as described in § 63.2861(d)?	No, a SSM activity is not categorized as normal operation.	Yes, only if your source does not follow the SSM plan.	Yes, only if your source does not follow the SSM plan.

TABLE 2 OF § 63.2850.—SCHEDULES FOR DEMONSTRATING COMPLIANCE UNDER VARIOUS SOURCE OPERATING MODES

If your source is . . .	and is operating under . . .	then your recordkeeping schedule . . .	You must determine your first compliance ratio by the end of the calendar month following . . .	Base your first compliance ratio on information recorded . . .
1. Existing	Normal operation,	Begins on the compliance date.	The first 12 operating months after the compliance date.	During the first 12 operating months after the compliance date.
2. New	Normal operation,	Begins on the startup date of your new source.	The first 12 operating months after the startup date of the new source.	During the first 12 operating months after the startup date of the new source.
3.	An initial startup period,.	Begins on the startup date of your new source.	The first 12 operating months after termination of the initial startup period, which can last for up to 6 months.	During the first 12 operating months after the initial startup period, which can last for up to 6 months.
4. Existing or new that has been significantly modified.	Normal operation,	Resumes on the startup date of the modified source.	The first operating month after the startup date of the modified source.	During the previous 11 operating months prior to the significant modification and the first operating month following the initial startup date of the source.

TABLE 2 OF § 63.2850.—SCHEDULES FOR DEMONSTRATING COMPLIANCE UNDER VARIOUS SOURCE OPERATING MODES—Continued

If your source is. . .	and is operating under. . .	then your record-keeping schedule . . .	You must determine your first compliance ratio by the end of the calendar month following. . .	Base your first compliance ratio on information recorded. . .
5.	An initial startup period.	Resumes on the startup date of the modified source.	The first operating month after termination of the initial startup period, which can last up to 3 months.	During the 11 operating months before the significant modification and the first operating month after the initial startup period.

(2) *Malfunction period.* Throughout the malfunction period, you must meet all of the requirements listed in paragraph (a) of this section and Table 1 of this section for sources operating during a malfunction period. At the end of the malfunction period, your source must then meet all of the requirements listed in Table 1 of this section for sources under normal operation.

§ 63.2851 What is a plan for demonstrating compliance?

(a) You must develop and implement a written plan for demonstrating compliance that provides the detailed procedures you will follow to monitor and record data necessary for demonstrating compliance with this subpart. Procedures followed for quantifying solvent loss from the source and amount of oilseed processed vary from source to source because of site-specific factors such as equipment design characteristics and operating conditions. Typical procedures include one or more accurate measurement methods such as weigh scales, volumetric displacement, and material mass balances. Because the industry does not have a uniform set of procedures, you must develop and implement your own site-specific plan for demonstrating compliance before the compliance date for your source. You must also incorporate the plan for demonstrating compliance by reference in the source's title V permit and keep the plan on-site and readily available as long as the source is operational. If you make any changes to the plan for demonstrating compliance, then you must keep all previous versions of the plan and make them readily available for inspection for at least 5 years after each revision. The plan for demonstrating compliance must include the items in paragraphs (a)(1) through (a)(7) of this section:

(1) The name and address of the owner or operator.

(2) The physical address of the vegetable oil production process.

(3) Method of measurement. Provide a detailed description of all methods of measurement your source will use to determine your solvent losses, HAP content of solvent, and the tons of each type of oilseed processed.

(4) Measurement Frequency. Specify when each measurement will be made.

(5) Calculations. Provide examples of each calculation you will use to determine your compliance status. Include examples of how you will convert data measured with one parameter to other terms for use in compliance determination.

(6) Recordkeeping. Provide example logs of how data will be recorded.

(7) Quality assurance/quality control plan. Provide a plan to ensure that the data continue to meet compliance demonstration needs.

(b) The responsible agency of this subpart may require you to revise your plan for demonstrating compliance. The responsible agency may require reasonable revisions if the procedures lack detail, are inconsistent or do not accurately determine solvent loss, HAP content of the solvent, or the tons of oilseed processed.

§ 63.2852 What is a startup, shutdown, and malfunction plan?

You must develop a written startup, shutdown, and malfunction plan in accordance with § 63.6(e)(3) of the General Provisions and implement the plan, when applicable. You must complete the SSM plan before the compliance date for your source. You must also incorporate the SSM plan by reference in your source's title V permit and keep the SSM plan on-site and readily available as long as the source is operational. The SSM plan provides detailed procedures for operating and maintaining your source to minimize emissions during a qualifying SSM event for which the source chooses the § 63.2850(e)(2) malfunction period, or the § 63.2850(c)(2) or § 63.2850(d)(2) initial startup period. The SSM plan must specify a program of corrective action for malfunctioning process and air pollution control equipment and reflect the best practices now in use by the industry to minimize emissions. Some or all of the procedures may come from plans you developed for other purposes such as a Standard Operating Procedure manual or an Occupational Safety and Health Administration Process Safety Management plan. To qualify as a SSM plan, other such plans must meet all the applicable requirements of this subpart.

§ 63.2853 How do I determine the actual solvent loss?

By the end of each calendar month following an operating month, you must determine the total solvent loss in gallons for the previous operating month. The total solvent loss for an operating month includes all solvent losses that occur during normal operating periods within the operating month. If you have determined solvent losses for 12 or more operating months, then you must also determine the 12 operating months rolling sum of actual solvent loss in gallons by summing the monthly actual solvent loss for the previous 12 operating months. The 12 operating months rolling sum of solvent loss is the ''actual solvent loss,'' which is used to calculate your compliance ratio as described in § 63.2840.

(a) To determine the actual solvent loss from your source, follow the procedures in your plan for demonstrating compliance to determine the items in paragraphs (a)(1) through (a)(5) of this section:

(1) *The dates that define each operating status period during a calendar month.* The dates that define each operating status period include the beginning date of each calendar month and the date of any change in the source operating status. If the source maintains the same operating status during an entire calendar month, these dates are the beginning and ending dates of the calendar month.

(2) *Source operating status.* You must categorize the operating status of your source for each recorded time interval in accordance with criteria in Table 1 of this section, as follows:

TABLE 1 OF § 63.2853.—CATEGORIZING YOUR SOURCE OPERATING STATUS

If during a recorded time interval . . .	then your source operating status is . . .
i. your source processes any amount of listed oilseed and your source is not operating under an initial startup period or a malfunction period subject to § 63.2850(c)(2), § 63.2850(d)(2), or § 63.2850(e)(2).	a normal operating period.
ii. your source processes no agricultural product and your source is not operating under an initial startup period or malfunction period subject to § 63.2850(c)(2), § 63.2850(d)(2), or § 63.2850(e)(2).	a nonoperating period.
iii. you choose to operate your source under an initial startup period subject to § 63.2850(c)(2) or § 63.2850(d)(2) ..	an initial startup period.
iv. you choose to operate your source under a malfunction period subject to § 63.2850(e)(2)	a malfunction period.
v. your source processes agricultural products not defined as listed oilseed	an exempt period.

(3) *Measuring the beginning and ending solvent inventory.* You are required to measure and record the solvent inventory on the beginning and ending dates of each normal operating period that occurs during an operating month. An operating month is any calendar month with at least one normal operating period. You must consistently follow the procedures described in your plan for demonstrating compliance, as specified in § 63.2851, to determine the extraction solvent inventory, and maintain readily available records of the actual solvent loss inventory, as described in § 63.2862(c)(1). In general, you must measure and record the solvent inventory only when the source is actively processing any type of agricultural product. When the source is not active, some or all of the solvent working capacity is transferred to solvent storage tanks which can artificially inflate the solvent inventory.

(4) *Gallons of extraction solvent received.* Record the total gallons of extraction solvent received in each shipment. For most processes, the gallons of solvent received represents purchases of delivered solvent added to the solvent storage inventory. However, if your process refines additional vegetable oil from off-site sources, recovers solvent from the off-site oil, and adds it to the on-site solvent inventory, then you must determine the quantity of recovered solvent and include it in the gallons of extraction solvent received.

(5) *Solvent inventory adjustments.* In some situations, solvent losses determined directly from the measured solvent inventory and quantity of solvent received is not an accurate estimate of the ''actual solvent loss'' for use in determining compliance ratios. In such cases, you may adjust the total solvent loss for each normal operating period as long as you provide a reasonable justification for the adjustment. Situations that may require adjustments of the total solvent loss include, but are not limited to, situations in paragraphs (a) (5)(i) and (5)(ii) of this section:

(i) Solvent destroyed in a control device. You may use a control device to reduce solvent emissions to meet the emission standard. The use of a control device does not alter the emission limit for the source. If you use a control device that reduces solvent emissions through destruction of the solvent instead of recovery, then determine the gallons of solvent entering the control device and destroyed there during each normal operating period. All solvent destroyed in a control device during a normal operating period can be subtracted from the total solvent loss. Examples of destructive emission control devices include catalytic incinerators, boilers, or flares. Identify and describe in your plan for demonstrating compliance each type of reasonable and sound measurement method that you use to quantify the gallons of solvent entering and exiting the control device and to determine the destruction efficiency of the control device. You may use design evaluations to document the gallons of solvent destroyed or removed by the control device instead of performance testing under § 63.7 of the General Provisions. The design evaluations must be based on the procedures and options described in §§ 63.985(b)(1)(i) (A) through (C) or § 63.11, as appropriate. All data, assumptions, and procedures used in such evaluations must be documented and must be available for inspection. If you use performance testing to determine solvent flow rate to the control device or destruction efficiency of the device, follow the procedures as outlined in § 63.997(e)(1) and (2). Instead of periodic performance testing to demonstrate continued good operation of the control device, you may develop a monitoring plan, following the procedures outlined in § 63.988(c) and using operational parametric measurement devices such as fan parameters, percent measurements of lower explosive limits (LELs), and combustion temperature.

(ii) Changes in solvent working capacity. In records you keep on-site, document any process modifications resulting in changes to the solvent working capacity in your vegetable oil production process. Solvent working capacity is defined in § 63.2872. In general, solvent working capacity is the volume of solvent normally retained in solvent recovery equipment such as the extractor, desolventizer-toaster, solvent storage, working tanks, mineral oil absorber, condensers, and oil/solvent distillation system. If the change occurs during a normal operating period, you must determine the difference in working solvent volume and make a one-time documented adjustment to the solvent inventory.

(b) Use Equation 1 of this section to determine the actual solvent loss occurring from your affected source for all normal operating periods recorded within a calendar month. Equation 1 of this section follows:

$$\text{Monthly Actual Solvent Loss (gal)} = \sum_{i=1}^{n} \left(SOLV_B - SOLV_E + SOLV_R \pm SOLV_A \right)_i \qquad \text{(Eq. 1)}$$

Where:

$SOLV_B$ = Gallons of solvent in the inventory at the beginning of normal operating period ''i'' as determined in paragraph (a)(3) of this section.

$SOLV_E$ = Gallons of solvent in the inventory at the end of normal operating period ''i'' as determined in paragraph (a)(3) of this section.

$SOLV_R$ = Gallons of solvent received between the beginning and ending inventory dates of normal operating period ''i'' as determined in paragraph (a)(4) of this section.

$SOLV_A$ = Gallons of solvent added or removed from the extraction solvent inventory during normal operating period ''i'' as determined in paragraph (a)(5) of this section.

n = Number of normal operating periods in a calendar month.

(c) The actual solvent loss is the total solvent losses during normal operating periods for the previous 12 operating months. You determine your actual solvent loss by summing the monthly actual solvent losses for the previous 12 operating months. You must record the actual solvent loss by the end of each calendar month following an operating month. Use the actual solvent loss in Equation 2 in § 63.2840 to determine the compliance ratio. Actual solvent loss does not include losses that occur during operating status periods listed in paragraphs (c)(1) through (4) of this section. If any one of these four operating status periods span an entire month, then the month is treated as nonoperating and there is no compliance ratio determination.

(1) Nonoperating periods as described in paragraph (a)(2)(ii) of this section.

(2) Initial startup periods as described in § 63.2850(c)(2) or § 63.2850(d)(2).

(3) Malfunction periods as described in § 63.2850(e)(2).

(4) Exempt operation periods as described in paragraph (a)(2)(v) of this section.

§ 63.2854 How do I determine the weighted average volume fraction of HAP in the actual solvent loss?

(a) This section describes the information and procedures you must use to determine the weighted average volume fraction of HAP in extraction solvent received for use in your vegetable oil production process. By the end of each calendar month following an operating month, determine the weighted average volume fraction of HAP in extraction solvent received since the end of the previous operating month. If you have determined the monthly weighted average volume fraction of HAP in solvent received for 12 or more operating months, then also determine an overall weighted average volume fraction of HAP in solvent received for the previous 12 operating months. Use the volume fraction of HAP determined as a 12 operating months weighted average in Equation 2 in § 63.2840 to determine the compliance ratio.

(b) To determine the volume fraction of HAP in the extraction solvent determined as a 12 operating months weighted average, you must comply with paragraphs (b)(1) through (3) of this section:

(1) Record the volume fraction of each HAP comprising more than 1 percent by volume of the solvent in each delivery of solvent, including solvent recovered from off-site oil. To determine the HAP content of the materials used in your operations, the reference method is EPA Method 311 of appendix A of this part. You may use EPA Method 311, an approved alternative method, or any other reasonable means for determining the HAP content. Other reasonable means of determining HAP content include, but are not limited to, a material safety data sheet (MSDS) or a manufacturer's hazardous air pollutant data sheet. You are not required to test the materials that you use, but the Administrator may require a test using EPA Method 311 (or an approved alternative method) to confirm the reported HAP content. However, if the results of an analysis by EPA Method 311 are different from the HAP content determined by another means, the EPA Method 311 results will govern compliance determinations.

(2) Determine the weighted average volume fraction of HAP in the extraction solvent each operating month. The weighted average volume fraction of HAP for an operating month includes all solvent received since the end of the last operating month, regardless of the operating status at the time of the delivery. Determine the monthly weighted average volume fraction of HAP by summing the products of the HAP volume fraction of each delivery and the volume of each delivery and dividing the sum by the total volume of all deliveries as expressed in Equation 1 of this section. Record the result by the end of each calendar month following an operating month. Equation 1 of this section follows:

$$\text{Monthly Weighted Average HAP Content of Extraction Solvent (volume fraction)} = \frac{\sum_{i=1}^{n}\left(\text{Received}_i * \text{Content}_i\right)}{\text{Total Received}} \qquad \text{(Eq. 1)}$$

Where:

$Received_i$ = Gallons of extraction solvent received in delivery ''i.''

$Content_i$ = The volume fraction of HAP in extraction solvent delivery ''i.''

Total Received = Total gallons of extraction solvent received since the end of the previous operating month.

n = Number of extraction solvent deliveries since the end of the previous operating month.

(3) Determine the volume fraction of HAP in your extraction solvent as a 12 operating months weighted average. When your source has processed oilseed for 12 operating months, sum the products of the monthly weighted average HAP volume fraction and corresponding volume of solvent received, and divide the sum by the total volume of solvent received for the 12 operating months, as expressed by Equation 2 of this section. Record the result by the end of each calendar month following an operating month and use it in Equation 2 in § 63.2840 to determine the compliance ratio. Equation 2 of this section follows:

$$\text{12-Month Weighted Average of HAP Content in Solvent Received (volume fraction)} = \frac{\sum_{i=1}^{12}\left(\text{Received}_i * \text{Content}_i\right)}{\text{Total Received}} \qquad \text{(Eq. 2)}$$

Where:

$Received_i$ = Gallons of extraction solvent received in operating month ''i'' as determined in accordance with § 63.2853(a)(4).

$Content_i$ = Average volume fraction of HAP in extraction solvent received in operating month ''i'' as determined in accordance with paragraph (b)(1) of this section.

Total Received = Total gallons of extraction solvent received during the previous 12 operating months.

§ 63.2855 How do I determine the quantity of oilseed processed?

By the end of each calendar month following an operating month, you must determine the tons of each listed oilseed processed for the operating month. The total oilseed processed for an operating month includes the total of each oilseed processed during all normal operating periods that occur within the operating month. If you have determined the tons of oilseed processed for 12 or more operating months, then you must also determine the 12 operating months rolling sum of each type oilseed processed by summing the tons of each type of oilseed processed for the previous 12 operating months. The 12 operating months rolling sum of each type of oilseed processed is used to calculate the compliance ratio as described in § 63.2840.

(a) To determine the tons of each type of oilseed processed at your source, follow the procedures in your plan for demonstrating compliance to determine the items in paragraphs (a)(1) through (5) of this section:

(1) *The dates that define each operating status period.* The dates that define each operating status period include the beginning date of each calendar month and the date of any change in the source operating status. The dates on each oilseed inventory log must be consistent with the dates recorded for the solvent inventory.

(2) *Source operating status.* You must categorize the source operation for each recorded time interval. The source operating status for each time interval recorded on the oilseed inventory for each type of oilseed must be consistent with the operating status recorded on the solvent inventory logs as described in § 63.2853(a)(2).

(3) *Measuring the beginning and ending inventory for each oilseed.* You are required to measure and record the oilseed inventory on the beginning and ending dates of each normal operating period that occurs during an operating month. An operating month is any calendar month with at least one normal operating period. You must consistently follow the procedures described in your plan for demonstrating compliance, as specified in § 63.2851, to determine the oilseed inventory, and maintain readily available records of the oilseed inventory as described by § 63.2862(c)(3).

(4) *Tons of each oilseed received.* Record the type of oilseed and tons of each shipment of oilseed received and added to your onsite storage.

(5) *Oilseed inventory adjustments.* In some situations, determining the quantity of oilseed processed directly from the measured oilseed inventory and quantity of oilseed received is not an accurate estimate of the tons of oilseed processed for use in determining compliance ratios. For example, spoiled and molded oilseed removed from storage but not processed by your source will result in an overestimate of the quantity of oilseed processed. In such cases, you must adjust the oilseed inventory and provide a justification for the adjustment. Situations that may require oilseed inventory adjustments include, but are not limited to, the situations listed in paragraphs (a)(5)(i) through (v) if this section:

(i) Oilseed that mold or otherwise become unsuitable for processing.

(ii) Oilseed you sell before it enters the processing operation.

(iii) Oilseed destroyed by an event such as a process malfunction, fire, or natural disaster.

(iv) Oilseed processed through operations prior to solvent extraction such as screening, dehulling, cracking, drying, and conditioning; but that are not routed to the solvent extractor for further processing.

(v) Periodic physical measurements of inventory. For example, some sources periodically empty oilseed storage silos to physically measure the current oilseed inventory. This periodic measurement procedure typically results in a small inventory correction. The correction factor, usually less than 1 percent, may be used to make an adjustment to the source's oilseed inventory that was estimated previously with indirect measurement techniques. To make this adjustment, your plan for demonstrating compliance must provide for such an adjustment.

(b) Use Equation 1 of this section to determine the quantity of each oilseed type processed at your affected source during normal operating periods recorded within a calendar month. Equation 1 of this section follows:

$$\text{Monthly Quantity of Each Oilseed Processed (tons)} = \sum_{n=1}^{n}\left(SEED_B - SEED_E + SEED_R \pm SEED_A\right) \qquad \text{(Eq. 1)}$$

Where:

$SEED_B$ = Tons of oilseed in the inventory at the beginning of normal operating period ''i'' as determined in accordance with paragraph (a)(3) of this section.

$SEED_E$ = Tons of oilseed in the inventory at the end of normal operating period ''i'' as determined in accordance with paragraph (a)(3) of this section.

$SEED_R$ = Tons of oilseed received during normal operating period ''i'' as determined in accordance with paragraph (a)(4) of this section.

$SEED_A$ = Tons of oilseed added or removed from the oilseed inventory during normal operating period ''i'' as determined in accordance with paragraph (a)(5) of this section.

n = Number of normal operating periods in the calendar month during which this type oilseed was processed.

(c) The quantity of each oilseed processed is the total tons of each type of listed oilseed processed during normal operating periods in the previous 12 operating months. You determine the tons of each oilseed processed by summing the monthly quantity of each oilseed processed for each oilseed for the previous 12 operating months. You must record the 12 operating months quantity of each type of oilseed processed by the end of each calendar month following an operating month. Use the 12 operating months quantity of each type of oilseed processed to determine the compliance ratio as described in § 63.2840. The quantity of oilseed processed does not include oilseed processed during the operating status periods in paragraphs (c)(1) through (4) of this section. If any one of these four operating status periods span an entire calendar month, then the calendar month is treated as a nonoperating month and there is no compliance ratio determination.

(1) Nonoperating periods as described in § 63.2853 (a)(2)(ii).

(2) Initial startup periods as described in § 63.2850(c)(2) or (d)(2).

(3) Malfunction periods as described in § 63.2850(e)(2).

(4) Exempt operation periods as described in § 63.2853(a)(2)(v).

Notifications, Reports, and Records

§ 63.2860 What notifications must I submit and when?

You must submit the one-time notifications listed in paragraphs (a) through (d) of this section to the responsible agency:

(a) *Initial notification for existing sources.* For an existing source, submit an initial notification to the responsible agency of this subpart no later than 120 days after the effective date of this subpart. In the notification, include the items in paragraphs (a)(1) through (5) of this section:

(1) The name and address of the owner or operator.

(2) The physical address of the vegetable oil production process.

(3) Identification of the relevant standard, such as the vegetable oil production NESHAP in this subpart, and compliance date.

(4) A brief description of the source including the types of listed oilseeds processed, nominal operating capacity, and type of desolventizer(s) used.

(5) A statement designating the source as a major source of HAP or a demonstration that the source meets the definition of an area source. An area source is a source that is not a major source and is not collocated within a plant site with other sources that are individually or collectively a major source.

(b) *Initial notifications for new and reconstructed sources.* New or reconstructed sources must submit a series of notifications before, during, and after source construction per the schedule listed in § 63.9 of the General Provisions. The information requirements for the notifications are the same as those listed in the General Provisions with the exceptions listed in paragraphs (b)(1) and (b)(2) of this section:

(1) The application for approval of construction does not require the specific HAP emission data required in §§ 63.5(d)(1)(ii)(H), 63.5(d)(1)(iii), 63.5(d)(2) and 63.5(d)(3)(ii). The application for approval of construction would include, instead, a brief description of the source including the types of listed oilseeds processed, nominal operating capacity, and type of desolventizer(s) used.

(2) The notification of actual startup date must also include whether you have elected to operate under an initial startup period subject to § 63.2850(c)(2) and provide an estimate and justification for the anticipated duration of the initial startup period.

(c) *Significant modification notifications.* Any existing or new source that plans to undergo a significant modification as defined in § 63.2872 must submit two reports as described in paragraphs (c)(1) and (c)(2) of this section:

(1) *Initial notification.* You must submit an initial notification to the responsible agency of this subpart 30 days prior to initial startup of the significantly modified source. The initial notification must demonstrate that the proposed changes qualify as a significant modification. The initial notification must include the items in paragraphs (c)(1)(i) and (c)(1)(ii) of this section:

(i) The expected startup date of the modified source.

(ii) A description of the significant modification including a list of the equipment that will be replaced or modified. If the significant modification involves changes other than adding or replacing extractors, desolventizer-toasters (conventional and specialty), and meal dryer-coolers, then you must also include: the fixed capital cost of the new components expressed as a percentage of the fixed capital cost to build a comparable new vegetable oil production process, supporting documentation for the cost estimate, and documentation that the proposed changes will significantly affect solvent losses.

(2) *Notification of actual startup.* You must submit a notification of actual startup date within 15 days after initial startup of the modified source. The notification must include the items in paragraphs (c)(2)(i) through (iv) of this section:

(i) The initial startup date of the modified source.

(ii) An indication whether you have elected to operate under an initial startup period subject to § 63.2850(d)(2).

(iii) The anticipated duration of any initial startup period.

(iv) A justification for the anticipated duration of any initial startup period.

(d) *Notification of compliance status.* As an existing, new, or reconstructed source, you must submit a notification of compliance status report to the responsible agency no later than 60 days after determining your initial 12 operating months compliance ratio. If you are an existing source, you generally must submit this notification no later than [50 calendar months after promulgation of these NESHAP] (36 calendar months for compliance, 12 operating months to record data, and 2 calendar months to complete the report). If you are a new or reconstructed source, the notification of compliance status is generally due no later than 20 calendar months after initial startup (6 calendar months for the initial startup period, 12 operating months to record data, and 2 calendar months to complete the report). The notification of compliance status must contain the items in paragraphs (d)(1) through (6) of this section:

(1) The name and address of the owner or operator.

(2) The physical address of the vegetable oil production process.

(3) Each listed oilseed type processed during the previous 12 operating months.

(4) Each HAP identified under § 63.2854(a) as being present in concentrations greater than 1 percent by volume in each delivery of solvent received during the 12 operating months period used for the initial compliance determination.

(5) A statement designating the source as a major source of HAP or a demonstration that the source qualifies as an area source. An area source is a source that is not a major source and is not collocated within a plant site with other sources that are individually or collectively a major source.

(6) A compliance certification indicating whether the source complied with all of the requirements of this subpart throughout the 12 operating months used for the initial source compliance determination. This certification must include a certification of the items in paragraphs (d)(6)(i) through (iii) of this section:

(i) The plan for demonstrating compliance (as described in § 63.2851) and SSM plan (as described in § 63.2852) are complete and available on site for inspection.

(ii) You are following the procedures described in the plan for demonstrating compliance.

(iii) The compliance ratio is less than or equal to 1.00.

§ 63.2861 What reports must I submit and when?

After the initial notifications, you must submit the reports in paragraphs (a) through (d) of this section to the responsible agency of this subject at the appropriate time intervals:

(a) *Annual Compliance Certifications.* The first annual compliance certification is due 12 calendar months after you submit the Notification of Compliance Status. Each subsequent annual compliance certification is due

12 calendar months after the previous annual compliance certification. The annual compliance certification provides the compliance status for each operating month during the 12 calendar months period ending 60 days prior to the date on which the report is due. Include the information in paragraphs (a)(1) through (a)(6) of this section in the annual certification:

(1) The name and address of the owner or operator.

(2) The physical address of the vegetable oil production process.

(3) Each listed oilseed type processed during the 12 calendar months period covered by the report.

(4) Each HAP identified under § 63.2854(a) as being present in concentrations greater than 1 percent by volume in each delivery of solvent received during the 12 calendar months period covered by the report.

(5) A statement designating the source as a major source of HAP or a demonstration the source qualifies as an area source. An area source is a source that is not a major source and is not collocated within a plant site with other sources that are individually or collectively a major source.

(6) A compliance certification to indicate whether the source was in compliance for each compliance determination made during the 12 calendar months period covered by the report. For each such compliance determination, you must include a certification of the items in paragraphs (a)(6)(i) through (iii) of this section:

(i) You are following the procedures described in the plan for demonstrating compliance.

(ii) The compliance ratio is less than or equal to 1.00.

(b) *Deviation notification report.* Submit a deviation report for each compliance determination you make in which the compliance ratio exceeds 1.00 as determined under § 60.2840(c). Submit the deviation report by the end of the month following the calendar month in which you determined the deviation. The deviation notification report must include the items in paragraphs (b)(1) through (b)(4) of this section:

(1) The name and address of the owner or operator.

(2) The physical address of the vegetable oil production process.

(3) Each oilseed type processed during the 12 operating months period for which you determined the deviation.

(4) The compliance ratio comprising the deviation. You may reduce the frequency of submittal of the Deviation Notification Report if the responsible agency of this subject does not object as provided in § 63.10(e)(3)(iii) of the General Provisions.

(c) *Periodic startup, shutdown, and malfunction report.* If you choose to operate your source under an initial startup period subject to § 63.2850(c)(2) or § 63.2850(d)(2) or a malfunction period subject to § 63.2850(e)(2), you must submit a periodic SSM report by the end of the calendar month following each month in which the initial startup period or malfunction period occurred. The periodic SSM report must include the items in paragraphs (c)(1) through (c)(3) of this section:

(1) The name, title, and signature of a source's responsible official who is certifying that the report accurately states that all actions taken during the initial startup or malfunction period were consistent with the SSM plan.

(2) A description of events occurring during the time period, the date and duration of the events, and reason the time interval qualifies as an initial startup period or malfunction period.

(3) An estimate of the solvent loss during the initial startup or malfunction period with supporting documentation.

(d) *Immediate SSM Reports.* If you handle a SSM during an initial startup period subject to § 63.2850(c)(2) or § 63.2850(d)(2) or a malfunction period subject to § 63.2850(e)(2) differently from procedures in the SSM plan, then you must submit an immediate SSM report. Immediate SSM reports consist of a telephone call or facsimile transmission to the responsible agency within 2 working days after starting actions inconsistent with the SSM plan, followed by a letter within 7 working days after the end of the event. The letter must include the items in paragraphs (d)(1) through (d)(3) of this section:

(1) The name, title, and signature of a source's responsible official who is certifying the accuracy of the report, an explanation of the event, and the reasons for not following the SSM plan.

(2) A description and date of the SSM event, its duration, and reason it qualifies as a SSM.

(3) An estimate of the solvent loss for the duration of the SSM event with supporting documentation.

§ 63.2862 What records must I keep?

(a) You must satisfy the recordkeeping requirements of this section by the compliance date for your source specified in Table 1 in § 63.2834.

(b) Prepare a plan for demonstrating compliance (as described in § 63.2851) and a SSM plan (as described in § 63.2852). In these two plans, describe the procedures you will follow in obtaining and recording data, and determining compliance under normal operations or a SSM subject to § 63.2850(c)(2) or § 63.2850(d)(2) initial startup period or the § 63.2850(e)(2) malfunction period. Complete both plans before the compliance date for your source and keep them on-site and readily available as long as the source is operational.

(c) If your source processes any listed oilseed, record the items in paragraphs (c)(1) through (c)(5) of this section:

(1) For the solvent inventory, record the information in paragraphs (c)(1)(i) through (vii) of this section in accordance with your plan for demonstrating compliance:

(i) Dates that define each operating status period during a calendar month.

(ii) The operating status of your source such as normal operation, nonoperating, initial startup period, malfunction period, or exempt operation for each recorded time interval.

(iii) Record the gallons of extraction solvent in the inventory on the beginning and ending dates of each normal operating period.

(iv) The gallons of all extraction solvent received, purchased, and recovered during each calendar month.

(v) All extraction solvent inventory adjustments, additions or subtractions. You must document the reason for the adjustment and justify the quantity of the adjustment.

(vi) The total solvent loss for each calendar month, regardless of the source operating status.

(vii) The actual solvent loss in gallons for each operating month.

(2) For the weighted average volume fraction of HAP in the extraction solvent, you must record the items in paragraphs (c)(2)(i) through (iii) of this section:

(i) The gallons of extraction solvent received in each delivery.

(ii) The volume fraction of each HAP exceeding 1 percent by volume in each delivery of extraction solvent.

(iii) The weighted average volume fraction of HAP in extraction solvent received since the end of the last operating month as determined in accordance with § 63.2854(b)(2).

(3) For each type of oilseed processed, record the items in paragraphs (c)(3)(i) through (vi) of this section, in accordance with your plan for demonstrating compliance:

(i) The dates that define each operating status period. These dates must be the same as the dates entered for the extraction solvent inventory.

(ii) The operating status of your source such as normal operation, nonoperating, initial startup period,

malfunction period, or exempt operation for each recorded time interval. On the log for each type of oilseed that is not being processed during a normal operating period, you must record which type of oilseed is being processed in addition to the source operating status.

(iii) The oilseed inventory for the type of oilseed being processed on the beginning and ending dates of each normal operating period.

(iv) The tons of each type of oilseed received at the affected source each normal operating period.

(v) All oilseed inventory adjustments, additions or subtractions for normal operating periods. You must document the reason for the adjustment and justify the quantity of the adjustment.

(vi) The tons of each type of oilseed processed during each operating month.

(d) After your source has processed oilseed for 12 operating months, and you are not operating during an initial startup period as described in § 63.2850(c)(2) or § 63.2850(d)(2), or a malfunction period as described in § 63.2850(e)(2), record the items in paragraphs (d)(1) through (5) of this section by the end of the calendar month following each operating month:

(1) The 12 operating month rolling sum of the actual solvent loss in gallons as described in § 63.2853(c).

(2) The weighted average volume fraction of HAP in extraction solvent received for the previous 12 operating months as described in § 63.2854(b)(3).

(3) The 12 operating months rolling sum of each type of oilseed processed at the affected source in tons as described in § 63.2855(c).

(4) A determination of the compliance ratio. Using the values from §§ 63.2853, 63.2854, 63.2855, and Table 1 in § 63.2840, calculate the compliance ratio using Equation 2 in § 63.2840.

(5) A statement of whether the source is in compliance with all of the requirements of this subpart. This includes a determination of whether you have met all of the applicable requirements in § 63.2850.

(e) For each SSM event subject to an initial startup period as described in § 63.2850(c)(2) or § 63.2850(d)(2), or a malfunction period as described in § 63.2850(e)(2), record the items in paragraphs (e)(1) through (3) of this section by the end of the calendar month following each month in which the initial startup period or malfunction period occurred:

(1) A description and date of the SSM event, its duration, and reason it qualifies as an initial startup or malfunction.

(2) An estimate of the solvent loss in gallons for the duration of the initial startup or malfunction period with supporting documentation.

(3) A checklist or other mechanism to indicate whether the SSM plan was followed during the initial startup or malfunction period.

§ 63.2863 In what form and how long must I keep my records?

(a) Your records must be in a form suitable and readily available for review in accordance with § 63.10(b)(1) of the General Provisions.

(b) As specified in § 63.10(b)(1) of the General Provisions, you must keep each record for 5 years following the date of each occurrence, measurement, maintenance, corrective action, report, or record.

(c) You must keep each record on site for at least 2 years after the date of each occurrence, measurement, maintenance, corrective action, report, or record, in accordance with § 63.10(b)(1) of the General Provisions. You can keep the records offsite for the remaining 3 years.

Other Requirements and Information

§ 63.2870 What parts of the General Provisions apply to me?

Table 1 of this section shows which parts of the General Provisions in §§ 63.1 through 63.13 apply to you. Table 1 of § 63.2870 follows:

TABLE 1 OF § 63.2870.—APPLICABILITY OF 40 CFR PART 63, SUBPART A, TO 40 CFR PART 63, SUBPART GGGG

General provisions citation	Subject of citation	Brief description of requirement	Applies to subpart	Explanation
1. § 63.1	Applicability	Initial Applicability Determination; Applicability After Standard Established; Permit Requirements; Extensions, Notifications.	Yes.	
2. § 63.2	Definitions	Definitions for Part 63 standards	Yes	Except as specifically provided in this subpart.
3. § 63.3	Units and Abbreviations	Units and abbreviations for Part 63 standards.	Yes.	
4. § 63.4	Prohibited Activities and Circumvention.	Prohibited Activities; Compliance date; Circumvention, Severability.	Yes.	
5. § 63.5	Construction/Reconstruction	Applicability; Applications; Approvals	Yes	Except for paragraphs of § 63.5 as listed in this table.
6. § 63.5(c)	[Reserved].			
7. § 63.5(d) (1)(ii) (H).	Application for Approval	Type and quantity of HAP, operating parameters.	No	All sources emit HAP. Subpart GGGG does not require control from specific emission points.
8. § 63.5(d)(1)(i)	[Reserved].			

TABLE 1 OF § 63.2870.—APPLICABILITY OF 40 CFR PART 63, SUBPART A, TO 40 CFR PART 63, SUBPART GGGG—Continued

General provisions citation	Subject of citation	Brief description of requirement	Applies to subpart	Explanation
9. § 63.5(d)(1)(iii), (d)(2), (d)(3)(ii).	.....	Application for approval	No	The requirements of the application for approval for new, reconstructed and significantly modified sources are described in § 63.2860 (b) and (c) of subpart GGGG. General provision requirements for identification of HAP emission points or estimates of actual emissions are not required. Descriptions of control and methods, and the estimated and actual control efficiency of such do not apply. Requirements for describing control equipment and the estimated and actual control efficiency of such equipment apply only to control equipment to which the subpart GGGG requirements for quantifying solvent destroyed by an add-on control device would be applicable.
10. § 63.6	Applicability of GP	Applicability of GP	Yes	Except for paragraphs of § 63.6 as listed in this table.
11. § 63.6(b) (1)–(3).	Compliance dates, new and reconstructed sources.	.....	No	Section 63.2834 of Subpart GGGG specifies the compliance dates for new and reconstructed sources.
12. § 63.6(b)(6)	[Reserved].			
13. § 63.6(c)(3)–(c)(4).	[Reserved].			
14. § 63.6(d)	[Reserved].			
15. § 63.6(e)	Operation and maintenance requirements.	.....	Yes	Implement your SSM plan, as specified in § 63.2851 of subpart GGGG.
16. § 63.6 (f)–(g) ...	Compliance with Nonopacity Emission Standards Except During SSM.	Comply with emission standards at all times except during SSM.	No	Subpart GGGG does not have nonopacity requirements.
17. § 63.6(h)	Opacity/Visible Emission (VE) Standards.	.....	No	Subpart GGGG has no opacity or visual emission standards.
18. § 63.6(i)	Compliance Extension	Procedures and criteria for responsible agency to grant compliance extension.	Yes.	
19. § 63.6(j)	Presidential Compliance Exemption.	President may exempt source category from requirement to comply with subpart.	Yes.	
20. § 63.7	Performance Testing Requirements.	Schedule, conditions, notifications and procedures.	Yes	Subpart GGGG requires performance testing only if the source applies additional control that destroys solvent. Section 63.2850(a)(6) requires sources to follow the performance testing guidelines of the General Provisions if a control is added.
21. § 63.8	Monitoring Requirements	.....	No	Subpart GGGG does not require monitoring other than as specified therein.
22. § 63.9	Notification Requirements ...	Applicability and state delegation	Yes	Except for paragraphs of § 63.9 as listed in this table.
23. § 63.9(b)(2)	Notification Requirements ...	Initial notification requirements for existing sources.	No	Section 63.2860(a) of subpart GGGG specifies the requirements of the initial notification for existing sources.
24. § 63.9(b) (3)–(5).	Notification Requirements ...	Notification requirement for certain new/reconstructed sources.	Yes	Except the information requirements differ as described in § 63.2860(b) of subpart GGGG.
25. § 63.9(e)	Notification of Performance Test.	Notify responsible agency 60 days ahead.	Yes	Applies only if performance testing is performed.
26. § 63.9(f)	Notification of VE/Opacity Observations.	Notify responsible agency 30 days ahead.	No	Subpart GGGG has no opacity or visual emission standards.

TABLE 1 OF § 63.2870.—APPLICABILITY OF 40 CFR PART 63, SUBPART A, TO 40 CFR PART 63, SUBPART GGGG—Continued

General provisions citation	Subject of citation	Brief description of requirement	Applies to subpart	Explanation
27. § 63.9(g)	Additional Notifications When Using a Continuous Monitoring System (CMS).	Notification of performance evaluation; Notification using COMS data; Notification that exceeded criterion for relative accuracy.	No	Subpart GGGG has no CMS requirements.
28. § 63.9(h)	Notification of Compliance Status.	Contents	No	Section 63.2860(d) of subpart GGGG specifies requirements for the notification of compliance status.
29. § 63.10	Recordkeeping/Reporting	Schedule for Reporting, record storage.	Yes	Except for paragraphs of § 63.10 as listed in this table.
30. § 63.10(b)(2)(i)	Recordkeeping	Record SSM event	Yes	Applicable to periods when sources must implement their SSM plan as specified in subpart GGGG.
31. § 63.10(b)(2)(ii)–(iii).	Recordkeeping	Malfunction of air pollution equipment	No	Applies only if air pollution control equipment has been added to the process and is necessary for the source to meet the emission limit.
32. § 63.10(b)(2)(vi)	Recordkeeping	CMS recordkeeping	No	Subpart GGGG has no CMS requirements.
33. § 63.10(b)(2)(viii)–(ix).	Recordkeeping	Conditions of performance test	Yes	Applies only if performance tests are performed. Subpart GGGG does not have any CMS opacity or visible emissions observation requirements.
34. § 63.10(b)(2)(x)–(xii).	Recordkeeping	CMS, performance testing, and opacity and visible emissions observations recordkeeping.	No	Subpart GGGG does not require CMS.
35. § 63.10(c)	Recordkeeping	Additional CMS recordkeeping	No	Subpart GGGG does not require CMS.
36. § 63.10(d)(2)	Reporting	Reporting performance test results	Yes	Applies only if performance testing is performed.
37. § 63.10(d)(3)	Reporting	Reporting opacity or VE observations	No	Subpart GGGG has no opacity or visible emission standards.
38. § 63.10(d)(4)	Reporting	Progress reports	Yes	Applies if a condition of compliance extension.
39. § 63.10(d)(5)	Reporting	SSM reporting	No	Section 63.2861 (c) and (d) of subpart GGGG specifies SSM reporting requirements.
40. § 63.10(e)	Reporting	Additional CMS reports	No	Subpart GGGG does not require CMS.
41. § 63.11	Control Device Requirements.	Requirements for flares	Yes	Applies only if your source uses a flare to control solvent emissions. Subpart GGGG does not require flares.
42. § 63.12	State Authority and Delegations.	State authority to enforce standards	Yes.	
43. § 63.13	State/Regional Addresses	Addresses where reports, notifications, and requests are sent.	Yes.	
44. § 63.14	Incorporation by Reference	Test methods incorporated by reference.	Yes.	
45. § 63.15	Availability of information and confidentiality.	Public and confidential information	Yes.	

§ 63.2871 Who administers this subpart?

(a) This subpart can be administered by us, the U.S. EPA, or a delegated authority such as your State, local, or tribal agency. If the U.S. EPA Administrator has delegated authority to your State, local, or tribal agency, then that agency has the authority to administer and enforce this regulation. You should contact your U.S. EPA Regional Office to find out if the authority to implement and enforce this regulation is delegated to your State, local, or tribal agency.

(b) In delegating implementation and enforcement authority of this subpart to a State, local, or tribal agency under subpart E of this part, the authorities contained in paragraph (c) of this section are retained by the Administrator of U.S. EPA and are not transferred to the State, local, or tribal agency.

(c) The authorities that will not be delegated to State, local, or tribal agencies are as follows:

(1) Approval of alternative nonopacity emissions standards under § 63.6(g).

(2) Approval of alternative opacity standards under § 63.6(h)(9).

(3) Approval of major alternatives to test methods under § 63.7(e)(2)(ii) and (f) and as defined in § 63.90.

(4) Approval of major alternatives to monitoring under § 63.8(f) and as defined in § 63.90.

(5) Approval of major alternatives to recordkeeping and reporting under § 63.10(f) and as defined in § 63.90.

§ 63.2872 What definitions apply to this subpart?

Terms used in this subpart are defined in the sources listed in paragraphs (a) through (c) of this section:

(a) The Clean Air Act, title III, section 112(a).

(b) In 40 § 63.2, the NESHAP General Provisions.

(c) In this section as follows:

Actual solvent loss means the gallons of solvent lost from a source during 12 operating months as determined in accordance with § 63.2853.

Agricultural product means any commercially grown plant or plant product.

Allowable HAP loss means the gallons of HAP that would have been lost from a source if the source was operating at the solvent loss factor for each oilseed type. The allowable HAP loss in gallons is determined by multiplying the tons of each oilseed type processed during the previous 12 operating months, as determined in accordance with § 63.2855, by the corresponding oilseed solvent loss factor (gal/ton) listed in Table 1 in § 63.2840, and by the dimensionless constant 0.64, and summing the result for all oilseed types processed.

Area source means any source that does not meet the major source definition.

Batch operation means any process that operates in a manner where the addition of raw material and withdrawal of product do not occur simultaneously. Typically, raw material is added to a process, operational steps occur, and a product is removed from the process. More raw material is then added to the process and the cycle repeats.

Calendar month means 1 month as specified in a calendar.

Compliance date means the date on which monthly compliance recordkeeping begins. For existing sources, recordkeeping typically begins 3 years after [the promulgation date of the subpart]. For new and reconstructed sources, recordkeeping typically begins upon initial startup, except as noted in § 63.2834.

Compliance ratio means a ratio of the actual HAP loss in gallons from the previous 12 operating months to an allowable HAP loss in gallons, which is determined by using oilseed solvent loss factors in Table 1 in § 63.2840, the weighted average volume fraction of HAP in solvent received for the previous 12 operating months, and the tons of each type of listed oilseed processed in the previous 12 operating months. Months during which no listed oilseed is processed, or months during which the § 63.2850(c)(2) or § 63.2850(d)(2) initial startup period or the § 63.2850(e)(2) malfunction period applies, are excluded from this calculation. Equation 2 in § 63.2840 of this subpart is used to calculate this value. If the value is less than or equal to 1.00, the source is in compliance. If the value is greater than 1.00, the source is deviating from compliance.

Continuous operation means any process that adds raw material and withdraws product simultaneously. Mass, temperature, concentration and other properties typically approach steady-state conditions.

Conventional desolventizer means a desolventizer toaster that operates with indirect and direct-contact steam to remove solvent from the extracted meal. Oilseeds processed in a conventional desolventizer produce crude vegetable oil and crude meal products, such as animal feed.

Corn germ dry milling means a source that processes corn germ that has been separated from the other corn components using a ''dry'' process of mechanical chafing and air sifting.

Corn germ wet milling means a source that processes corn germ that has been separated from other corn components using a ''wet'' process of centrifuging a slurry steeped in a dilute sulfurous acid solution.

Exempt period means a period of time during which a source processes agricultural products not defined as listed oilseed.

Extraction solvent means an organic chemical medium used to remove oil from an oilseed. Typically, the extraction solvent is a commercial grade of hexane isomers which have an approximate HAP content of 64 percent by volume.

Hazardous air pollutant (HAP) means any substance or mixture of substances listed as a hazardous air pollutant under section 112(b) of the Clean Air Act, as of May 26, 2000.

Initial startup date means the first calendar day that a new, reconstructed or significantly modified source processes any oilseed.

Initial startup period means a period of time from the initial startup date of a new, reconstructed or significantly modified source, for which you choose to operate the source under an initial startup period subject to § 63.2850(c)(2) or § 63.2850(d)(2). During an initial startup period, a source is in compliance with the standards by following the operating and maintenance procedures listed for minimizing HAP emissions in the source's SSM plan rather than being subject to a HAP emission limit. The initial startup period following initial startup of a new or reconstructed source may not exceed 6 calendar months. The initial startup period following a significant modification may not exceed 3 calendar months. Solvent and oilseed inventory information recorded during the initial startup period is excluded from use in any compliance ratio determinations.

Large cottonseed plant means a vegetable oil production process that processes 120,000 tons or more of cottonseed and other listed oilseed during all normal operating periods in a 12 operating month period used to determine compliance. Listed oilseed is defined with the entry for oilseed.

Malfunction period means a period of time between the beginning and end of a process malfunction and the time reasonably necessary for a source to correct the malfunction for which you choose to operate the source under a malfunction period subject to § 63.2850(e)(2). This period may include the duration of an unscheduled process shutdown, continued operation during a malfunction, or the subsequent process startup after a shutdown resulting from a malfunction. During a malfunction period, a source complies with the standards by following the operating and maintenance procedures described for minimizing HAP emissions in the source's SSM plan rather than being subject to a HAP emission limit. Therefore, solvent and oilseed inventory information recorded during a malfunction period is excluded from use in any compliance ratio determinations.

Mechanical extraction means removing vegetable oil from oilseeds using only mechanical devices such as presses or screws that physically force the oil from the oilseed. Mechanical extraction techniques use no organic solvents to remove oil from an oilseed.

Nonoperating period means any period of time in which a source processes no agricultural product. This operating status does not apply during any period in which the source operates under an initial startup period as described in § 63.2850(c)(2) or § 63.2850(d)(2), or a malfunction period, as described in § 63.2850(e)(2).

Normal operating period means any period of time in which a source processes a listed oilseed that is not categorized as an initial startup period as described in § 63.2850(c)(2) or § 63.2850(d)(2), or a malfunction period, as described in § 63.2850(e)(2). At the beginning and ending dates of a normal operating period, solvent and oilseed inventory information is recorded and

included in the compliance ratio determination.

Oilseed or listed oilseed means the following agricultural products: corn germ, cottonseed, flax, peanut, rapeseed (for example, canola), safflower, soybean, and sunflower.

Oilseed solvent loss factor means a ratio expressed as gallons of solvent loss per ton of oilseed processed. A solvent loss factor was determined for each type of listed oilseed and process operation based on the MACT floor. The solvent loss factors are presented in Table 1 in § 63.2840 and are used to determine the allowable HAP loss.

Operating month means any calendar month in which a source processes any quantity of listed oilseed, excluding any entire calendar month in which the source operated under an initial startup period as described in § 63.2850(c)(2) or § 63.2850(d)(2), or a malfunction period, as described in § 63.2850(e)(2). An operating month may include time intervals characterized by several types of operating status. However, an operating month must have at least one normal operating period.

Significant modification means the addition of new equipment or the modification of existing equipment that:

(1) Significantly affects solvent losses from your vegetable oil production process;

(2) The fixed capital cost of the new components represents a significant percentage of the fixed capital cost of building a comparable new vegetable oil production process; and

(3) The fixed capital cost of the new equipment does not constitute reconstruction as defined in § 63.2 of the General Provisions.

(4) Examples of significant modifications include replacement of or major changes to solvent recovery equipment such as extractors, desolventizer-toasters/dryer-coolers, flash desolventizers, and distillation equipment associated with the mineral oil system, and equipment affecting desolventizing efficiency and steady state operation of your vegetable oil production process such as flaking mills, oilseed heating and conditioning equipment, and cracking mills.

Small cottonseed plant means a vegetable oil production process that processes less than 120,000 tons of cottonseed and other listed oilseed during all normal operating periods in a 12 operating month period used to determine compliance.

Solvent extraction means removing vegetable oil from listed oilseed using an organic solvent in a direct-contact system.

Solvent working capacity means the volume of extraction solvent normally retained in solvent recovery equipment. Examples include components such as the solvent extractor, desolventizer-toaster, solvent storage and working tanks, mineral oil absorption system, condensers, and oil/solvent distillation system.

Specialty desolventizer means a desolventizer that removes excess solvent from soybean meal using vacuum conditions, energy from superheated solvent vapors, or reduced operating conditions (*e.g.,* temperature) as compared to the typical operation of a conventional desolventizer. Soybeans processed in a specialty desolventizer result in high-protein vegetable meal products for human and animal consumption, such as calf milk replacement products and meat extender products.

Vegetable oil production process means the equipment comprising a continuous process for producing crude vegetable oil and meal products, including specialty soybean products, in which oil is removed from listed oilseeds through direct contact with an organic solvent. Process equipment typically includes the following components: Oilseed preparation operations (including conditioning, drying, dehulling, and cracking), solvent extractors, desolventizer-toasters, meal dryers, meal coolers, meal conveyor systems, oil distillation units, solvent evaporators and condensers, solvent recovery system (also referred to as a mineral oil absorption system), vessels storing solvent-laden materials, and crude meal packaging and storage vessels. A vegetable oil production process does not include vegetable oil refining operations (including operations such as bleaching, hydrogenation, and deodorizing) and operations that engage in additional chemical treatment of crude soybean meals produced in specialty desolventizer units (including operations such as soybean isolate production).

[FR Doc. 00–12794 Filed 5–25–00; 8:45 am]

BILLING CODE 6560–50–P

Federal Register

Friday,
May 26, 2000

Part III

Environmental Protection Agency

40 CFR Part 63

National Emission Standards for Hazardous Air Pollutants for Wet-Formed Fiberglass Mat Production; Proposed Rule

ENVIRONMENTAL PROTECTION AGENCY

40 CFR Part 63

[FRL–6703–5]

RIN 2060–AH89

National Emission Standards for Hazardous Air Pollutants for Wet-Formed Fiberglass Mat Production

AGENCY: Environmental Protection Agency (EPA).

ACTION: Proposed rule.

SUMMARY: The EPA is adding wet-formed fiberglass mat production to the list of categories of major sources of hazardous air pollutants (HAPs) published under section 112(c) of the Clean Air Act (CAA) and to the source category schedule for national emission standards for hazardous air pollutants (NESHAP).

The EPA is, at the same time, proposing the NESHAP for new and existing sources at wet-formed fiberglass mat production facilities. The HAPs emitted by the facilities subject to the proposed NESHAP include three organic HAPs (formaldehyde, methanol, and vinyl acetate). Exposure to these HAPs can cause reversible or irreversible adverse health effects including carcinogenic, respiratory, nervous system, developmental, reproductive, and/or dermal health effects. The EPA estimates the proposed NESHAP would reduce nationwide emissions of HAPs from the drying and curing ovens at these facilities by 199 megagrams per year (Mg/yr)(219 tons per year or tons/yr), an approximate 74 percent reduction from the current level of emissions. Under section 112(c)(5) of the CAA, the wet-formed fiberglass mat production NESHAP has a promulgation date of May 26, 2002.

The proposed NESHAP are based on the Administrator's determination that wet-formed fiberglass mat production facilities emit several of the 188 HAPs listed in the CAA from the various process operations found within the industry, and that these facilities can be major sources of HAPs. The proposed NESHAP protect the public by requiring all wet-formed fiberglass mat production facilities that are major sources to meet emission standards reflecting the application of the maximum achievable control technology (MACT).

DATES: *Comments.* Public comments on the proposed rule must be received on or before July 25, 2000.

Public Hearing. A public hearing will be held if requests to speak are received by June 12, 2000.

ADDRESSES: *Comments.* Interested parties may submit written comments (in duplicate, if possible) to Docket No. A–97–54 at the following address: Air and Radiation Docket and Information Center (6102), U.S. Environmental Protection Agency, 1200 Pennsylvania Avenue, NW, Washington, DC 20460. A separate copy of the comments should be sent to Mr. Juan Santiago, Minerals and Inorganic Chemicals Group, Emission Standards Division (MD–13), U.S. Environmental Protection Agency, Research Triangle Park, North Carolina 27711, telephone number (919) 541–1084.

FOR FURTHER INFORMATION CONTACT: For information concerning the proposed rule, contact Mr. Juan Santiago, Minerals and Inorganic Chemicals Group, Emission Standards Division (MD–13), U.S. Environmental Protection Agency, Research Triangle Park, North Carolina 27711, telephone number (919) 541–1084, e-mail address: santiago.juan@epa.gov. For information regarding Method 316, contact Ms. Rima N. Howell; Emissions, Monitoring, and Analysis Division (MD–19); U.S. Environmental Protection Agency, Research Triangle Park, North Carolina 27711, telephone number (919) 541–0443, e-mail address: *howell.rima@epa.gov.*

SUPPLEMENTARY INFORMATION:

Comments. Commenters wishing to submit proprietary information for consideration should clearly distinguish such information from other comments and clearly label it ''Confidential Business Information.'' Submissions containing such proprietary information should be sent directly to the following address, and not to the public docket, to ensure that proprietary information is not inadvertently placed in the docket: Attention: Mr. Juan Santiago, c/o OAQPS Document Control Officer, 411 W. Chapel Hill Street, Room 740B, Durham, North Carolina 27701. Information covered by such a claim of confidentiality will be disclosed by EPA only to the extent allowed and by the procedures set forth in 40 CFR part 2. If no claim of confidentiality accompanies a submission when it is received by EPA, the submission may be made available to the public without further notice to the commenter.

Public Hearing. Anyone requesting to present oral testimony or attend the public hearing must contact Ms. Tanya Medley at (919) 541–5422 no later than June 16, 2000. A verbatim transcript of the hearing and any written statements will be available for public inspection and copying during normal working hours at the EPA's Air and Radiation Docket and Information Center in Washington, DC.

Docket. Docket A–97–54, containing supporting information used in developing the proposed standards, is available at the Air and Radiation Docket and Information Center, 401 M Street, SW, Room M–1500, Waterside Mall, Washington D.C. 20460 and may be inspected from 8 a.m. to 5:30 p.m., Monday through Friday. Copies of this information may be obtained by request from the Air Docket by calling (202) 260–7548. A reasonable fee may be charged for copying docket materials.

Electronic Access and Filing Addresses. The official record for this rulemaking has been established under Docket No. A–97–54 (including comments and data submitted electronically). A public version of this record, including printed, paper versions of electronic comments, which does not include any information claimed as confidential business information (CBI), is available for inspection from 8 a.m. to 5:30 p.m., Monday through Friday, excluding legal holidays.

Electronic comments can be sent directly to the EPA's Air and Radiation Docket and Information Center at: ''A–and–R–Docket@epamail.epa.gov.'' Electronic comments must be submitted in American Standard Code for Information Interchange (ASCII) file format. Avoid the use of special characters and any form of encryption. Comments and data will also be accepted on disks in WordPerfect® Version 5.1, 6.1 or Corel 8 file format or ASCII file format. All comments and data in electronic form must be identified by the docket number (A–97–54). Electronic comments may be filed online at many Federal Depository Libraries.

Worldwide Web (WWW). The proposed regulatory text will be available on the WWW through the Technology Transfer Network (TTN), a network of the EPA's electronic bulletin boards. The TTN provides information and technology exchange in various areas of air pollution control. The TTN is accessible through the Internet at ''TELNET ttnbbs.rtpnc.epa.gov''. If more information on the TTN is needed, call the HELP line at (919) 541–5384.

Regulated Entities. Entities potentially regulated by this action are those industrial facilities that manufacture wet-formed fiberglass mat. Wet-formed fiberglass mat production is classified under Standard Industrial Classification (SIC) code 3329325, a subset of SIC code 3329, Pressed and Blown Glass, Not Elsewhere Classified. Regulated categories and entities are shown in

table 1. This table is not intended to be exhaustive, but provides a guide for readers regarding entities likely to be regulated by final action on this proposal. This table lists the types of entities that EPA is now aware could potentially be regulated by final action on this proposal. To determine whether your facility would be regulated by final action on this proposal, carefully examine the applicability criteria in section III.A of this preamble and in § 63.2981 of the proposed rule. If there are any questions regarding the applicability of this action to a particular entity, consult Mr. Juan Santiago (See **FOR FURTHER INFORMATION CONTACT**).

TABLE 1.—REGULATED CATEGORIES AND ENTITIES

Category	SIC code	Description
Industrial	3329325	Wet-formed fiberglass mat production facilities.

Incorporation by Reference. A request for approval of the incorporation by reference by the Director of the Office of the Federal Register will be submitted prior to promulgation of this rule for the following material: Chapters 3 and 5 of ''Industrial Ventilation: A Manual of Recommended Practice,'' American Conference of Governmental Industrial Hygienists (22nd edition, 1995). The procedures in this material are used for designing the system for capturing and conveying HAP emissions to the control device. The incorporation by reference of this publication is expected to be approved by the Director of the Office of the Federal Register upon promulgation.

Organization of this Document. The information in this preamble is organized as follows:

I. Introduction
A. Regulatory Background and Addition to Source Category List
B. Solicitation of Comments
C. Source of Authority for National Emission Standards for Hazardous Air Pollutants Development
D. What are the health effects of pollutants emitted from this source category?
E. Wet-Formed Fiberglass Mat Production Industry Profile and Process Description
F. How were pollution prevention practices considered in the development of these proposed NESHAP?
II. What are the requirements of these proposed NESHAP?
A. Do these proposed NESHAP apply to me?
B. What emission standards must I meet?
C. What operating standards must I meet?
D. What are the performance test and initial compliance provisions of these proposed NESHAP?
E. What monitoring requirements must I meet?
F. What are the notification, recordkeeping, and reporting requirements of these proposed NESHAP?
III. What are the impacts of these proposed NESHAP?
A. What are the air emission impacts?
B. What are the water and solid waste impacts?
C. What are the energy impacts?
D. Are there any additional environmental and health impacts?
E. What are the cost impacts?
F. What are the economic impacts?
IV. How were these proposed NESHAP developed?
A. Selection of Emission Sources
B. Selection of MACT Floor
C. Emission Limits
D. Selection of Test Methods
E. Selection of Operating Standards and Monitoring Requirements
V. What are the administrative requirements of these proposed NESHAP?
A. Executive Order 12866—Regulatory Planning and Review
B. Executive Order 13045—Protection of Children From Environmental Health Risks and Safety Risks
C. Executive Order 13132—Federalism
D. Executive Order 13084—Consultation and Coordination with Tribal Governments
E. Unfunded Mandates Reform Act
F. Regulatory Flexibility Act
G. Paperwork Reduction Act
H. National Technology Transfer and Advancement Act

I. Introduction

A. Regulatory Background and Addition to Source Category List

Section 112(c) of the CAA directs us to list each category of major and area sources, as appropriate, that emits one or more of the 188 HAPs listed in section 112(b) of the CAA. The term ''major source'' is defined in section 112(a)(1) to mean:

> * * * any stationary source or group of stationary sources located within a contiguous area under common control that emits or has the potential to emit, considering controls, in the aggregate 10 tons per year or more of any HAP or 25 tons per year or more of any combination of HAPs * * *

We published an initial list of source categories on July 16, 1992 (57 FR 31576). Included on the initial source category list were major sources of HAP emissions from the asphalt roofing and processing industry.

During development of the asphalt roofing and processing NESHAP, industry representatives alerted us about the existence of the wet-formed fiberglass mat production industry, and its relationship to the asphalt roofing production industry. They indicated to us that wet-formed fiberglass mat production facilities have the potential to be major sources of HAP emissions, and some wet-formed fiberglass mat production facilities are collocated with asphalt roofing and processing facilities. They expressed the opinion that there should be a NESHAP for wet-formed fiberglass mat production developed separately from the asphalt roofing and processing industry. We have decided to propose a separate NESHAP for wet-formed fiberglass mat production because the production processes and pollutant emissions differ from those in the asphalt roofing industry. In addition, wet-formed fiberglass mat is produced at both stand-alone facilities and those collocated with asphalt roofing and processing facilities. The CAA provides that we may amend the list anytime. Consequently, wet-formed fiberglass mat production is being added to the source category list under section 112(c) of the CAA.

Wet-formed fiberglass mat is the substrate for several asphalt roofing products. In wet-formed fiberglass mat production, glass fibers are bonded with an organic resin. The mat is formed as the resin is dried and cured in heated ovens. The majority of HAP emissions associated with wet-formed fiberglass mat production are emitted from the drying and curing oven exhaust. Based on HAP emission data obtained during the development of this proposed rule, we have determined that wet-formed fiberglass mat production facilities are major sources of HAPs. Nine of the 14 facilities (10 of the 15 production lines) control the drying and curing oven exhaust emissions. All five of the remaining facilities that do not control the drying and curing oven exhaust are major sources of HAPs (Docket No. A–97–54).

Today's action adds wet-formed fiberglass mat production to the list of source categories for which MACT standards are to be developed. Final standards for this source category are required to be promulgated by May 26, 2002.

B. Solicitation of Comments

We are seeking full public participation in arriving at final decisions and encourage comments on all aspects of this proposal from all interested parties. Full supporting data and detailed analyses should be submitted with comments to allow us to make maximum use of the comments. All comments should be sent according to the information given in the **ADDRESSES** section. Comments on this proposal must be submitted on or before the date specified in the **DATES** section.

C. Source of Authority for National Emission Standards for Hazardous Air Pollutants Development

Section 112 of the CAA requires us to promulgate standards for the control of HAP emissions from each source category listed under section 112(c). The statute requires the standards to reflect the maximum degree of reduction in emissions of HAPs that is achievable taking into consideration the cost of achieving the emission reduction, any non-air quality health and environmental impacts, and energy requirements. This level of control is commonly referred to as MACT. The MACT standards can be based on the emission reductions achievable through application of measures, processes, methods, systems, or techniques including, but not limited to: (1) Reducing the volume of, or eliminating emissions of, such pollutants through process changes, substitution of materials, or other modifications; (2) enclosing systems or processes to eliminate emissions; (3) collecting, capturing, or treating such pollutants when released from a process, stack, storage, or fugitive emissions point; (4) design, equipment, work practice, or operational standards (including requirements for operator training or certification) as provided in section 112(h) of the CAA; or (5) a combination of the above (see section 112(d)(2) of the CAA).

For new sources, MACT standards cannot be less stringent than the emission control achieved in practice by the best-controlled similar source (see section 112(d)(3) of the CAA). The MACT standards for existing sources can be less stringent than standards for new sources. However, they cannot be less stringent than the average emission limitation achieved by the best-performing 12 percent of existing sources for categories and subcategories with 30 or more sources, or the best-performing five sources for categories or subcategories with fewer than 30 sources.

In essence, MACT standards are designed to ensure that all major sources of air toxic emissions achieve the level of control already being achieved by the better-controlled and lower-emitting sources in each category. This approach provides assurance to the public that each major source of toxic air pollution will be required to effectively control its emissions. At the same time, this approach provides a level economic playing field, ensuring that facilities that employ cleaner processes and good emission controls are not disadvantaged relative to competitors with poorer controls.

D. What Are the Health Effects of Pollutants Emitted From This Source Category?

The CAA was created, in part, ''to protect and enhance the quality of the Nation's air resources so as to promote the public health and welfare and the productive capacity of its population'' (see section 101(b) of the CAA). The proposed NESHAP would protect public health by reducing emissions of HAPs from wet-formed fiberglass mat production facilities.

Emission data collected during development of the proposed NESHAP show that formaldehyde, vinyl acetate, and methanol are emitted from wet-formed fiberglass mat production facilities (Docket No. A–97–54). The proposed emission limits would reduce emissions of formaldehyde, vinyl acetate, and methanol emitted from drying and curing ovens. As a result of controlling these HAPs, the proposed NESHAP would also reduce emissions of volatile organic compounds (VOC). Following is a summary of the potential health effects caused by exposure to these pollutants.

Exposure to formaldehyde, vinyl acetate, and methanol irritates the eyes, skin, and mucous membranes and can cause conjunctivitis, dermal inflammation, and respiratory symptoms. Formaldehyde exposure has been associated with reproductive effects such as menstrual disorders and pregnancy problems in female workers. We have classified formaldehyde as Class B1, a probable human carcinogen, on the basis of findings of nasal cancer in animal studies and limited human data. Acute exposure to vinyl acetate is known to cause irritation of the lungs and nose, and irritation or blistering of skin. Exposure to very high levels of vinyl acetate can cause dizziness. Data are not sufficient to classify vinyl acetate as a potential human carcinogen.

Acute exposure to methanol (usually by ingestion) is well known to cause blindness and severe metabolic acidosis, sometimes leading to death. Chronic methanol exposure, including inhalation, may cause central nervous system disturbances possibly leading to blindness. Methanol exposure has also been linked to developmental effects in animals. Data are not sufficient to classify methanol as a potential human carcinogen (Docket No. A–97–54).

The degree of adverse health effects associated with HAP exposure can range from mild to severe. The extent and degree to which the health effects may be experienced are dependent upon: (1) The ambient concentrations observed in the area (*e.g.,* as influenced by emission rates, meteorological conditions, and terrain); (2) the frequency and duration of exposures; (3) characteristics of exposed individuals (*e.g.,* genetics, age, preexisting health conditions, and lifestyles); and (4) pollutant-specific characteristics (*e.g.,* toxicity, half-life in the environment, and bioaccumulation).

Formaldehyde, vinyl acetate, and methanol are also VOC that are precursors to tropospheric ozone formation. Ambient concentrations in excess of the national ambient air quality standards (NAAQS) for ozone can damage lung tissue, reduce lung function, and increase sensitivity of the lung to other irritants. Additional information on the health effects of ozone are included in the EPA's ''Criteria Document'' (three volumes, EPA/600/P–93–004aF through EPA/600/P–93–004cF, July 1996), which supports the NAAQS for ozone. Many areas of the country, including several in which wet-formed fiberglass mat production facilities are located, are not in compliance with the NAAQS for ozone.

E. Wet-Formed Fiberglass Mat Production Industry Profile and Process Description

Wet-formed fiberglass mat is currently produced in the United States by nine companies operating 14 plants (15 production lines) in nine States. These plants may be collocated with asphalt roofing plants because wet-formed fiberglass mat can be used as a substrate for manufacturing asphalt roofing shingles and roll roofing products.

Wet-formed fiberglass mat is used as a substrate for asphalt shingles and roll roofing, as a reinforcement for reinforced plastic composite products (including thermosets and thermoplastics) and for cement and gypsum products, and in miscellaneous specialty applications such as battery separators and for pipe-wrapping and flooring.

A typical wet-formed fiberglass mat production line consists of the following processes: (1) Preparation of glass fibers;

(2) formation of fibers into a fiberglass mat; (3) saturation with urea-formaldehyde binder solution; (4) curing and drying the binder-coated fiberglass mat; (5) cooling the mat; and (6) trimming, cutting, and packaging.

Fiberglass mat is manufactured by binding glass fibers with urea-formaldehyde resin. The glass fibers are mixed with water and emulsifiers in large (several thousand gallons) mixing vats to form an aqueous slurry of fibers and water. The slurry is then pumped to another large vat that acts as a surge tank and then to a third vat that is the supply tank for the mat forming machine.

The mat forming machine consists of a slurry dispenser and moving wire screen belt. The wire screen belt carries the glass fiber mat throughout the production process. The glass fiber slurry is dispensed from a slot onto the screen in a uniform curtain. After the slurry is dispensed onto the screen, the screen passes over a vacuum slot into which the excess water and emulsion are drawn, leaving only a layer of fibers on the screen.

The mat of fibers then passes under a binder dispenser. An aqueous solution of urea-formaldehyde binder is dispensed from a slot or a curtain coater onto the mat of fibers in a uniform curtain. Just after the binder is dispensed onto the mat, the screen passes over another vacuum slot into which the excess binder solution is drawn.

The mat of fibers and binder then passes into a drying and curing oven. This is a multiple-stage oven that uses heated, forced air to carry away excess moisture. In the first stage, the moisture is driven from the binder. This causes the binder to migrate to the points where the glass fibers cross each other. In the second and third stages of the oven, the binder cures and hardens. After leaving the oven, the finished mat is wound into large rolls and prepared for shipment.

The information in the Technical Association of the Pulp and Paper Industry (TAPPI) survey responses (Docket No. A–97–54) and information obtained from a single facility that did not respond to the TAPPI survey (Docket No. A–97–54) indicate that drying and curing oven emissions from 10 of the 15 glass mat production lines are controlled by thermal oxidizers. Five facilities for which information is available do not have add-on emission controls on either the binder application vacuum or the drying and curing oven exhausts. No emission control devices other than thermal oxidizers are used on the drying and curing oven exhausts in this industry.

The thermal oxidizers used in this industry operate at temperatures that range from about 1,000 to 1,500 degrees Fahrenheit (°F) (540 to 820 degrees Celsius (°C)) with residence times from 0.5 to 4.8 seconds. Most existing thermal oxidizers are also designed for energy recovery. Formaldehyde destruction efficiencies, for those facilities for which there are data, range from about 90 percent to greater than 99 percent.

F. How Were Pollution Prevention Practices Considered in the Development of These Proposed NESHAP?

The format of the proposed NESHAP is a mass emission limit (kilograms of formaldehyde per megagram of wet-formed fiberglass mat produced) and an equivalent percentage reduction requirement compliance option. The mass emission limit allows for the use of pollution prevention practices in place of add-on control devices. A potential pollution prevention practice could be a process modification to reduce the formaldehyde content of binder formulations.

II. What Are the Requirements of These Proposed NESHAP?

A. Do These Proposed NESHAP Apply to Me?

The proposed NESHAP would apply to each existing and newly constructed drying and curing oven located at a wet-formed fiberglass mat production facility that is a major source of HAPs or that is collocated with a major source. A major source means any source that has the potential to emit 10 tons/yr or more of any one HAP or 25 tons/yr or more of any combination of HAPs. If your facility is determined to be an area source, you would not be subject to these proposed NESHAP.

B. What Emission Standards Must I Meet?

The proposed NESHAP regulate emissions of formaldehyde as a surrogate for total HAP emissions. Control of formaldehyde will also result in control of vinyl acetate and methanol. A mass emission limit and a percentage reduction requirement compliance option for formaldehyde are proposed for each new and existing drying and curing oven. The emission limits are the same for new and existing sources. New source and existing source emission standards for the drying and curing oven exhaust are a maximum formaldehyde emission rate of 0.03 kilograms per megagram (kg/Mg) of wet-formed fiberglass mat produced (0.05 pounds per ton (lb/ton) of wet-formed fiberglass mat produced) or a minimum of 96 percent destruction efficiency of formaldehyde (as shown in table 2). You can choose to comply with either the emission rate limit or the percent reduction requirement. If you use a thermal oxidizer or other control device to achieve the mass emission limit or percentage reduction requirement, you must collect and convey the emissions from each drying and curing oven to the control device according to the procedures specified in chapters 3 and 5 of ''Industrial Ventilation: A Manual of Recommended Practice.''

TABLE 2.—SUMMARY OF PROPOSED EMISSION STANDARDS FOR NEW AND EXISTING DRYING AND CURING OVENS AT WET-FORMED FIBERGLASS MAT MANUFACTURING PLANTS

Process	Emission limit
Each existing and new drying and curing oven.	0.03 kg of formaldehyde per Mg of fiberglass mat (0.05 lb of formaldehyde per ton of fiberglass mat). OR 96 percent reduction of formaldehyde.

C. What Operating Standards Must I Meet?

In addition to the emission standards, the proposed NESHAP contain specific operating standards, summarized in Table 3. The operating standards require you to maintain certain process or control device parameters within the levels established during the initial performance test. In general, the parameter values or ranges that must be maintained, must be approved by the

Administrator based on the performance test demonstrations. You must reference the operating standards in the operating permit that you are required to obtain under 40 CFR part 70.

You must also submit for the Administrator's approval an operations, maintenance, and monitoring (OMM) plan for the facility. The OMM plan specifies the parameters that must be monitored, how they will be monitored, and the corrective actions to follow whenever a monitored parameter deviates from the operating standards. You must also reference the OMM plan in your 40 CFR part 70 operating permit.

TABLE 3.—SUMMARY OF OPERATING STANDARDS FOR NEW AND EXISTING SOURCES

Affected source	Monitor type/operation/process	Operating Standards
Drying and curing ovens	Resin free-formaldehyde content.	Use a resin with a free-formaldehyde content no greater than that of the resin used during the performance test, as determined by the resin purchase specification or test method.
	Binder formulation formaldehyde content.	Use a binder with a formaldehyde content no greater than that of the binder formulation used during the performance test.
	Product urea-formaldehyde resin solids content.	Do not manufacture a product with a urea-formaldehyde resin solids content per ton of product higher than that of the product made during the performance test.
	Loss-on-ignition	Do not exceed the loss-on-ignition value of the product made during the performance test.
	Solids content of urea-formaldehyde resin.	Do not exceed the solids content of the urea-formaldehyde resin used in the product made during the performance test.
Drying and curing ovens controlled by a thermal oxidizer.	Thermal oxidizer operating temperature.	Maintain the average temperature for each 3-hour period at or above the average operating temperature achieved during the performance test.
	Thermal oxidizer operation.	Operate the thermal oxidizer in accordance with the operation, maintenance, and monitoring plan; annually inspect the thermal oxidizer for structural and design integrity.
Drying and curing ovens controlled by modifications or a control device other than a thermal oxidizer.	Process or control device parameters.	Maintain the process or control device within the ranges established during the performance test.
All affected sources	Corrective action	Initiate corrective action within 1 hour of an established operating parameter excursion and complete and document action per operation, maintenance and monitoring plan.

If the operating parameters deviate from the values or ranges specified in your OMM plan, you would be in violation of the standards. Following the performance test, whenever a monitored parameter deviates from the established operating standards, you must initiate the corrective actions specified in the OMM plan within 1 hour. You must complete the corrective actions in an expeditious manner and implement them as specified in your OMM plan.

If you use a thermal oxidizer to achieve compliance with the emission standards, you must operate the thermal oxidizer so that the average operating temperature in any 3-hour block period does not fall below the average temperature established during the performance test. Additionally, an annual inspection of the thermal oxidizer is required to ensure that the structural and design integrity of the combustion chamber is maintained in the same condition as during the performance test. If you use process modifications or an add-on control device other than a thermal oxidizer to achieve compliance with the emission standards, you must maintain the process or control device parameter(s) within the required ranges that you established during the performance test.

The operating standards also require you to maintain the resin free-formaldehyde content, the binder formulation formaldehyde content, the solids content of the urea-formaldehyde resin, the urea-formaldehyde resin solids content of the product manufactured, and the loss-on-ignition value of the wet-formed fiberglass mat produced within the levels you established during a compliance test and as specified in your OMM plan.

D. What Are the Performance Test and Initial Compliance Provisions of These Proposed NESHAP?

You must conduct a performance test to demonstrate initial compliance with the emission limits. The performance test must be performed initially and every 5 years following the initial performance test. A performance test is also required to change the value or range of an operating standard. Under the proposed NESHAP, you must conduct the performance test while operating at or near the maximum production rate and while making wet-formed fiberglass mat with the highest urea-formaldehyde resin solids content, loss-on-ignition value, using the resin with the highest free-formaldehyde content, and using the binder with the highest formaldehyde content. You must measure formaldehyde emissions as the average of three test runs using EPA Reference Method 316 in appendix A of 40 CFR part 63, ''Sampling and Analysis for Formaldehyde from Stationary Sources in the Mineral Wool and Wool Fiberglass Industries.'' This proposed method was published in the March 31, 1997 **Federal Register** (63 FR 15288). You must demonstrate compliance with either the mass emission limit or the percentage reduction requirement using the instructions and equations contained in the performance test requirement section of this proposed NESHAP.

During the performance tests, you must continuously monitor the thermal oxidizer operating temperature and record the average temperature in 15-minute blocks during each 1-hour test run. After completion of the three required test runs, you must determine the 3-hour average operating temperature of the thermal oxidizer. If you use process modifications or an add-on control device other than a thermal oxidizer to comply with the

emission standards, you must determine the appropriate control device or process monitoring parameters to indicate whether compliance is being achieved. You must include the process or control device parameters, monitoring frequency, and the averaging periods in your site-specific test plan required by the 40 CFR part 63 general provisions and approved by the permitting agency prior to conducting your initial performance test. You may perform multiple tests to establish the least restrictive value or operating range for the selected parameters that still demonstrate compliance.

During the performance tests, you must also monitor and record the average hourly wet-formed fiberglass mat production rate prior to edge trimming, the free-formaldehyde content and the solids content of the urea-formaldehyde resin used to produce the mat, the formaldehyde content of the binder used to produce the mat, the urea-formaldehyde solids content per ton of product, and the loss-on-ignition value of the product manufactured during each of the three test runs.

If you use a thermal oxidizer to comply with these NESHAP, you must conduct a performance evaluation for the thermal oxidizer temperature monitoring device prior to the initial performance test to determine compliance. The evaluation must be conducted according to the procedures in 40 CFR 63.8(e) of the NESHAP general provisions. The temperature monitoring device must meet the following performance and equipment specifications: (1) The temperature monitoring device must be installed at the exit of the combustion zone of each thermal oxidizer; (2) the recorder response range must include zero and 1.5 times the average temperature; and (3) the reference method must be a National Institute of Standards and Technology calibrated reference thermocouple-potentiometer system or an alternate reference, subject to the approval of the Administrator.

The proposed NESHAP would allow facilities subject to the NESHAP to conduct short-term experimental production runs, where the formaldehyde content or other process parameters deviate from the levels established during previous performance tests, without conducting additional performance tests. You must apply for approval from the Administrator or delegated State agency to conduct such experimental production runs. The application must be made at least 30 days prior to conducting the run. The application would include information on the nature and duration of the test runs including plans to perform emissions testing. Such experimental production runs are important to industry and allow them to develop new products, improve existing products, and determine the effects on emissions of process modifications being considered, such as binder formulation.

E. What Monitoring Requirements Must I Meet?

Continuous compliance is demonstrated after the initial performance test and between subsequent performance tests by monitoring emission control devices and process operating parameters. The allowable monitoring parameter values or ranges are determined during your initial performance test and must be approved by the Administrator.

If a thermal oxidizer is used to achieve compliance with the emission standards, you must monitor the operating temperature of the thermal oxidizer. If you use a thermal oxidizer to achieve compliance with the proposed emission standards, you must: (1) Install, operate, calibrate, and maintain a device that continuously measures the operating temperature of each thermal oxidizer; and (2) determine and record the temperature in 15-minute and 3-hour block averages. This is typically done using a thermocouple (a standard feature on most thermal oxidizers) and a chart recorder or data logger. You are also required to monitor the resin free-formaldehyde content, the binder formulation formaldehyde content, the solids content of the urea-formaldehyde resin, the urea-formaldehyde resin solids content of the product manufactured, and the loss-on-ignition value of the wet-formed fiberglass mat produced. Because these process parameters affect the amount of HAPs emitted from the drying and curing oven, you must monitor them to ensure that operation of the production process is consistent with the conditions of the performance test, and that the production process does not vary in such a way as to increase HAP emissions from the drying and curing oven exhaust.

If process modifications or a control device other than a thermal oxidizer is used to achieve compliance with the emission standards, you must monitor the parameters that were established during the performance test and approved by the Administrator.

The proposed NESHAP contain provisions that would allow you to change the thermal oxidizer operating temperature, add-on control devices, and process parameter values from those established using the initial and 5-year performance tests. These provisions would allow you to make process changes or to demonstrate that different monitoring parameter values would more appropriately demonstrate compliance with the proposed emission standards. You may revise the monitoring or process parameter values by conducting additional performance tests to verify compliance at the revised operating levels. For example, if you intend to use a urea-formaldehyde resin with a higher free-formaldehyde or solids content, produce a wet-formed fiberglass mat with a higher urea-formaldehyde resin solids content, or produce a product with a higher loss-on-ignition value, you must perform additional performance tests to verify compliance at the increased operating or process parameters. You must request and obtain approval from the Administrator to conduct these additional performance tests and must submit performance data that justify and support the expanded parameter ranges before the facility is allowed to operate under the revised monitoring parameters.

F. What Are the Notification, Recordkeeping, and Reporting Requirements of These Proposed NESHAP?

All notification, recordkeeping, and reporting requirements in the 40 CFR part 63 general provisions, as well as additional requirements, apply to wet-formed fiberglass mat manufacturing facilities. The notification and reporting requirements include, but are not limited to: (1) Initial notification of applicability of the rule, notification of the dates for conducting the performance test, and notification of compliance status; (2) a report of performance test results; (3) a startup, shutdown, and malfunction plan; (4) reports of any startup, shutdown, and malfunction events that occur; and (5) reports of excess emissions (*i.e.,* monitoring parameter exceedances) and continuous monitoring system performance. When no exceedances occur, you must submit semiannual reports indicating that no exceedances have occurred during the period. If exceedances or deviations from established monitoring parameters occur, the frequency of submitting the excess emission reports becomes quarterly until a request to return to semiannual reporting is approved by the Administrator. You cannot submit the request to reduce the frequency of the reporting period until the affected

source's excess emissions and continuous monitoring system performance reports remain continually within the established parameter ranges for 1 full year.

You must maintain records of the following, as applicable: (1) Thermal oxidizer operating temperature; (2) process parameters for drying and curing ovens that comply with the emission standards using process modifications or an add-on control device other than a thermal oxidizer; (3) free-formaldehyde content of the resin; (4) binder formulation formaldehyde content; (5) loss-on-ignition value of the wet-formed fiberglass mat produced; (6) urea-formaldehyde resin solids content per ton of the wet-formed fiberglass mat produced; (7) average hourly wet-formed fiberglass mat production rate; (8) the date and time an exceedance commenced if a parameter monitoring exceedance occurs, the date and time corrective actions were initiated and completed, a description of the cause of the exceedance, and a description of the corrective actions taken; (9) the approved OMM plan; (10) maintenance and inspections performed on control devices; and (11) any other information required to be recorded in the general provisions.

The NESHAP general provisions require that records be maintained for at least 5 years from the date of each record. You would retain the records onsite for at least 2 years but may retain the records offsite for the remaining 3 years. The records must be readily available and in a form suitable for efficient inspection and review. The files may be retained on paper, on microfilm, on microfiche, on a computer, on computer disks, or on magnetic tape. Reports may be made on paper or on a labeled computer disk using commonly available and compatible computer software.

III. What Are the Impacts of These Proposed NESHAP?

A. What Are the Air Emission Impacts?

At the current level of control, nationwide emissions of HAPs from the 14 facilities in the industry are about 268 Mg/yr (295 tons/yr). Under the proposed NESHAP, it is expected that thermal oxidizers will be added to the five uncontrolled drying and curing ovens, and that existing thermal oxidizers will be replaced with new units for three out of the ten controlled drying and curing ovens. This would result in an estimated reduction in nationwide HAP emissions of 199 Mg/yr (219 tons/yr) (Docket No. A–97–54).

Formaldehyde emissions from wet-formed fiberglass mat manufacturing lines account for about 65 percent of the baseline HAP emissions. Methanol emissions account for approximately 30 percent, with vinyl acetate comprising the remaining 5 percent of the baseline HAP emissions. Estimated nationwide emissions of formaldehyde from existing wet-formed fiberglass mat production lines are 174 Mg/yr (192 tons/yr) at the current level of control. Implementing the proposed NESHAP will reduce nationwide formaldehyde emissions from existing sources by about 130 Mg/yr (143 tons/yr) (Docket No. A–97–54), and combined emissions of vinyl acetate and methanol will be reduced by 70 Mg/yr (77 tons/yr).

B. What Are the Water and Solid Waste Impacts?

Because compliance with the proposed NESHAP is based on the use of thermal oxidizers, no water pollution or solid waste impacts would result from the proposed NESHAP.

C. What Are the Energy Impacts?

Thermal oxidizers require electrical energy to operate fans. Additional electrical energy requirements are estimated to be 4,260 megawatt hours per year (MW-hr/yr). An additional 275,000 million British thermal units per year (Btu/yr) of natural gas are estimated to be required for eight additional thermal oxidizers that would be added to existing sources. The total additional energy (electricity and natural gas) required as a result of the proposed NESHAP is 290 billion Btu/yr in the fifth year following promulgation of the NESHAP (Docket No. A–97–54). No new glass mat production lines are projected in the 5 years after promulgation; therefore, no increased energy requirement is expected for new glass mat production lines under the proposed NESHAP.

D. Are There Any Additional Environmental and Health Impacts?

Reducing HAP emissions will lower occupational HAP and VOC exposure levels. The operation of thermal oxidizers may increase occupational noise levels in the five facilities that currently do not control HAP emissions.

E. What Are the Cost Impacts?

Cost impacts of the proposed NESHAP for drying and curing ovens were analyzed using site-specific information included in the TAPPI survey responses coupled with procedures from the ''OAQPS Cost Manual'' (Docket No. A–97–54). For some facilities where site-specific data necessary for estimating costs (e.g., a vent flow rate) were not available, average factors developed from industry data were used to estimate the missing data.

The total capital costs to achieve the proposed NESHAP were estimated to be $5,272,000. These capital cost impacts arise from the purchase and installation of eight thermal oxidizers—five thermal oxidizers for the five facilities without existing controls and three thermal oxidizers for three facilities that must replace existing thermal oxidizers that cannot meet the proposed NESHAP. The average capital costs of installing a new thermal oxidizer is $658,000 per oxidizer. The capital costs estimate to install a new thermal oxidizer to achieve compliance includes the cost of auxiliary burners, combustion chambers, primary heat exchangers, weather-tight housing and insulation, a fan, flow and temperature controls, a stack, and structural supports.

Ten of the 15 wet-formed fiberglass mat production lines have existing thermal oxidizers. We have formaldehyde emissions data for five of the existing thermal oxidizers. Based on an evaluation of the emissions data, four of these five thermal oxidizers are already achieving the formaldehyde control level required by the proposed NESHAP. Therefore, no thermal oxidizer capital costs to comply with the proposed NESHAP were estimated for these four facilities. The fifth facility controls both the drying and curing oven exhaust and the binder application vacuum exhaust. Since this facility is not achieving the formaldehyde control level required by the proposed NESHAP, the cost of a new thermal oxidizer was estimated for this facility. The thermal oxidizer cost estimate is based on the flow rate from the drying and curing oven exhaust only since the proposed NESHAP does not require control of the binder application vacuum exhaust.

No formaldehyde emissions data are available for the remaining five existing thermal oxidizers. Three facilities have thermal oxidizers operating at temperatures and residence times that are as high as those that have achieved the proposed formaldehyde control level. Therefore, we expect that these three facilities will be able to comply with the proposed NESHAP using their existing thermal oxidizers. No increases in capital or annual costs were estimated for these facilities. The two remaining thermal oxidizers have temperatures or residence times lower than those at the facilities that are achieving the proposed control levels. Capital costs were estimated to replace

these two thermal oxidizers with new thermal oxidizers that are designed to meet the proposed NESHAP.

The proposed monitoring requirements for the thermal oxidizer operating temperature are not current industry practice and are expected to impose additional costs on facilities with existing thermal oxidizers. To estimate the impact of the additional monitoring equipment (i.e., a data logging system), a cost of $7,000 ($1,000 for each of the seven facilities with an existing thermal oxidizer that is achieving the proposed NESHAP) was included in the capital cost estimate (Docket No. A–97–54). No additional capital costs were estimated for monitoring equipment for the new thermal oxidizers since temperature monitors and recording devices are standard equipment and are included in the cost estimates for new thermal oxidizers.

The total annualized cost of the proposed NESHAP for eight new thermal oxidizers is about $2,414,000. The average annual cost for a typical facility that installs a new thermal oxidizer is $302,000. The annualized cost estimate includes the cost of operation, maintenance, supervisory labor, maintenance materials, utilities, administrative charges, taxes, insurance, and capital recovery.

F. What Are the Economic Impacts?

The goal of the economic impact analysis is to estimate the market response of the wet-formed fiberglass mat production industry to the proposed emission standards and to determine the economic effects that may result from the proposed NESHAP. As discussed above, 14 facilities owned by nine different companies produce wet-formed fiberglass mat domestically. These facilities may potentially be affected by the proposed NESHAP.

The estimated nationwide annualized cost of the proposed NESHAP is $1.595 million. This cost estimate represents approximately 0.069 percent of the 1995 sales revenues for domestically produced wet-formed fiberglass mat. Based upon this estimate, it is reasonable to assume that market price increases and production decreases resulting from the proposed NESHAP are likely to be very small. Thus, we conclude that the proposed NESHAP is not likely to have a significant economic impact on the wet-formed fiberglass mat industry as a whole or on secondary markets such as the labor market and foreign trade.

We performed a streamlined economic analysis to determine facility-specific impacts. The facility-specific impacts are examined by calculating the ratio of the estimated annualized costs of emission controls for each facility to the estimated revenues per facility (i.e., a cost-to-sales ratio) to assess the likelihood of facility closures and employment impacts. Cost-to-sales ratios refer to the change in the cost of emission controls divided by the sales revenue of wet-formed fiberglass mat, the goods produced in the process for which additional pollution control is required. This ratio can be estimated for either individual firms or as an average for some set of firms such as affected small firms. While it has different significance for different market situations, it is a good rough gauge of potential impact. If costs for the individual (or group of) firms are completely passed onto the purchasers of the good(s) being produced, the ratio is an estimate of the price change (in percentage form after multiplying the ratio by 100). If costs are completely absorbed by the producer, this ratio is an estimate of changes in pretax profits (in percentage form after multiplying the ratio by 100). The distribution of cost-to-sales ratios across the whole market, the competitiveness of the market, and profit-to-sales ratios are among the obvious factors that may influence the significance of any particular cost-to-sales ratio for an individual facility.

For these proposed NESHAP, a cost-to-sales ratio exceeding 1 percent was determined to be an initial indicator of the potential for a significant facility impact. Each of the 14 facilities affected by the proposed NESHAP has cost-to-sales ratios of less than 1 percent of sales. Therefore, the facility-specific impacts are not considered to be significant for any facility affected by the proposed NESHAP. No facility is likely to close as a result of the proposed NESHAP. Facilities in the wet-formed fiberglass mat production industry are likely to increase the price charged for the product in response to market price changes, to absorb the costs with no price increase, or to respond with a combination of these alternatives. The economic impacts to consumers and producers of wet-formed fiberglass mat are anticipated to be minimal. The generally small scale of the impacts suggests that there will also be no significant impacts on markets for the products made using wet-formed fiberglass mat. For more information, consult the economic impact report entitled ''Economic Impact Analysis for the Proposed National Emission Standard for Hazardous Air Pollutants from the Production of Wet-Formed Fiberglass Mat,'' January 1999 (Docket No. A–97–54).

IV. How Were These Proposed NESHAP Developed?

A. Selection of Emission Sources

In the wet-formed fiberglass mat production industry, HAPs are emitted from two processes: binder application processes and drying and curing processes. For the reasons described below, we selected the drying and curing processes at new and existing wet-formed fiberglass mat production lines for control under the proposed NESHAP.

The drying and curing oven drives off moisture remaining on the fibers and sets the binder using heated air. Fans are used to draw hot air through the mat within each of the oven zones; the hot air may be recycled within each zone to conserve energy. Emissions of formaldehyde, vinyl acetate, and methanol result from vaporization of volatile compounds in the binder. Emissions from ten of the 15 drying and curing ovens on wet-formed fiberglass manufacturing lines are controlled by thermal oxidizers. Emissions from the remaining five ovens are uncontrolled.

The emissions from the drying and curing ovens account for approximately 90 percent of the total HAP emissions from wet-formed fiberglass mat production facilities. Although one facility controls the vent gases from the binder application vacuum exhaust along with the drying and curing oven exhaust, we do not consider the control of the binder application vacuum exhaust at this facility to represent MACT for new sources. When the binder application vacuum exhaust is controlled using an existing thermal oxidizer designed to control only the drying and curing oven exhaust, the overall HAP reduction achieved by the thermal oxidizer is decreased (Docket No. A–97–54). Introducing the binder application vacuum exhaust into an existing thermal oxidizer decreases the performance of the thermal oxidizer because of the decreased residence time in the thermal oxidizer and the high moisture content of the binder application vacuum exhaust. No binder application vacuum exhausts are controlled using stand-alone thermal oxidizers. In addition, the costs of controlling the binder application vacuum exhaust by requiring a stand-alone thermal oxidizer would be unreasonably high. For these reasons, we propose to regulate HAP emissions at the MACT floor only from the drying and curing oven processes.

B. Selection of MACT Floor

After identifying the MACT floors for new and existing sources, we must investigate regulatory alternatives. Regulatory alternatives are different levels of emissions control, equal to or more stringent than the MACT floor levels. Information about the industry is analyzed to project national impacts (which include HAP emission reduction levels and cost, energy, and non-air quality health and environmental impacts) and to select the regulatory alternative that best reflects MACT. The selected alternative may be more stringent than the MACT floor, but the control level must be achievable and reasonable in the Administrator's judgement considering cost, non-air quality health and environmental impacts, and energy requirements. The objective is to achieve the maximum degree of emissions reduction without imposing unreasonable impacts (see section 112(d)(2) of the CAA). The regulatory alternatives and emission limits selected for new and existing sources may be different because of different MACT floors.

In establishing the MACT standards, we may distinguish among classes, types, and sizes of sources within a category or subcategory when there are significant differences among the classes or subcategories (see section 112(d)(1) of the CAA). For the wet-formed fiberglass mat industry, we examined the processes, the process operations, and other factors to determine if separate classes of units, operations, or other criteria have an effect on air emissions or their controllability that would justify subcategories. Because all the wet-formed fiberglass mat production facilities use similar processes and emit the same pollutants, there is no basis for establishing subcategories. Therefore, we decided to regulate wet-formed fiberglass mat production as one source category.

Because the wet-formed fiberglass mat production industry has fewer than 30 sources, the MACT floor for existing sources is based on the average of the best-performing five sources. Nine facilities (10 production lines) of the 14 facilities (15 production lines) use a thermal oxidizer to control HAP emissions from the drying and curing oven exhaust. Emission reductions achieved by thermal oxidizers represent the best emissions control technology achieved by sources subject to the proposed standards. Thus, the MACT floor for existing sources is the level of control achieved by a thermal oxidizer.

The new source MACT floor is based on the emission control that is achieved in practice by the best-controlled similar source. Because the best-controlled drying and curing oven uses a thermal oxidizer and no more effective control technology than thermal oxidation has been achieved to control gaseous HAPs, this is also the MACT floor level of control for new sources.

One facility currently controls the emissions from the binder application vacuum exhaust using a thermal oxidizer originally designed to control only the drying and curing oven exhaust. Because the existing thermal oxidizer was not designed to control the binder application vacuum exhaust along with the drying and curing oven exhaust, a lower overall HAP reduction is achieved at this facility than by facilities controlling only the drying and curing oven exhaust. The overall HAP level of control is compromised due to the decreased residence time in the thermal oxidizer and the high moisture content of the binder application vacuum exhaust. Therefore, because it is not the best controlled source, we do not consider the control of the binder application vacuum exhaust at this facility to represent the MACT floor for new sources.

Currently, we are not aware of any available controls that are better than a thermal oxidizer for controlling gaseous HAP emissions at wet-formed fiberglass mat production lines. We considered controlling the binder application vacuum exhaust emissions in addition to the drying and curing oven exhaust emissions. We have determined that controlling the binder application vacuum exhaust emissions with a stand-alone thermal oxidizer was the only available beyond-the-floor option for existing sources. The incremental cost of controlling the binder application vacuum exhaust with a dedicated thermal oxidizer is approximately $39,200/Mg ($35,700/ton) of HAP reduced (Docket No. A–97–54). As discussed above, it is not possible to combine the binder application vacuum exhaust with the drying and curing oven exhaust at existing facilities without decreasing the performance of the existing thermal oxidizer. We did not select this control scenario because it achieves a lower overall HAP reduction.

As with existing sources, the only option more stringent than the MACT floor level of control for new sources is control of the binder application vacuum exhaust in addition to controlling the drying and curing oven exhaust. For new sources, a thermal oxidizer could be designed to handle both emission sources. Therefore, for this analysis, we assumed that a single thermal oxidizer would be used to control both the drying and curing oven exhaust and the binder application vacuum exhaust. This assumption was made since controlling the drying and curing oven exhaust and the binder application vacuum exhaust in separate thermal oxidizers would be more expensive than a single thermal oxidizer for both emission sources (Docket No. A–97–54).

The estimated incremental cost for new sources to control both the drying and curing oven exhaust and the binder application vacuum exhaust with one thermal oxidizer is approximately $12,800/Mg ($11,600/ton) of HAP reduced. The new source control cost estimates are based on a representative wet-formed fiberglass mat production facility controlling both the drying and curing oven exhaust and the binder application vacuum exhaust with a single thermal oxidizer (Docket No. A–97–54). Based on this evaluation, we concluded that the cost of controlling the binder application vacuum exhaust at new sources is unreasonable at this time.

For each of the cases evaluated above, we did not identify emission control technologies or control of additional emission sources that would reduce emissions to a level below the MACT floor without imposing costs which we concluded are unreasonable at this time. Therefore, we are proposing emission limits at the MACT floor level of control.

C. Emission Limits

We have performance data for five facilities in this industry that use thermal oxidizers to control drying and curing oven exhaust streams. Table 4 summarizes the available formaldehyde emissions data from these facilities. However, data from only four thermal oxidizers were used to determine the proposed emission limits. The performance of the thermal oxidizer at the fifth facility was not considered representative of the MACT floor level of control. This facility controls the emissions from the binder application vacuum exhaust using a thermal oxidizer originally designed to control only the emissions from the drying and curing oven exhaust. Because the binder application vacuum exhaust is a cooler and more dilute stream than the drying and curing oven exhaust, the residence time in the combustion chamber is decreased and HAP destruction efficiency is reduced. Therefore, data from plant E in table 4 were not used to determine emission limits for drying and curing ovens.

TABLE 4.—SUMMARY OF FORMALDEHYDE EMISSION TEST RESULTS ON WET-FORMED FIBERGLASS MAT PRODUCTION LINES FOR DRYING AND CURING OVEN EXHAUST

Plant	Thermal oxidizer parameters [b]	Average formaldehyde emissions [a]				Calculated control device efficiency (% destruction)
		Uncontrolled		Controlled		
		kg/Mg	lb/ton	kg/Mg	lb/ton	
A	1500 °F, 1.25 s RT	1.972	3.945	0.0065	0.013	99.7
B	1500 °F, 1 s RT	0.415	0.830	0.0018	0.0037	99.5
C	1350 °F, 0.75 s RT	0.296	0.591	0.0035	0.0070	98.8
D	1400 °F, 1.2 s RT	0.590	1.18	0.02	0.04	96.4
E [c]	1500 °F, 0.6 s RT	0.970	1.94	0.095	0.19	90.1

[a] Emission units are kg (lb) of formaldehyde per Mg (ton) of fiberglass mat product.
[b] RT = Retention time.
[c] This facility also controls the binder application vacuum exhaust with the thermal oxidizer that was originally designed to control only the drying and curing oven exhaust. Therefore, this thermal oxidizer was not considered representative of the MACT floor level of control.

The controlled emission rates of the four thermal oxidizers that represent the MACT floor level of control range from 0.0018 to 0.02 kg/Mg (0.0037 to 0.04 lb/ton) and the destruction efficiencies range from 99.7 to 96.4 percent efficiency. We believe that the differences in the performance achieved by the four thermal oxidizers are due to differences in operating temperature, residence time, combustion chamber design, and variations in uncontrolled emissions that occur in this industry. Considering these variables, we consider the performance of the four well-designed and -operated thermal oxidizers to represent the MACT floor level of control. Based on the data from all four sources with well-designed and -operated thermal oxidizers, and considering the variability in performance of a thermal oxidizer representative of the MACT floor level of control, we have selected a mass emission limit of 0.03 kg/Mg as the standard for new and existing sources. The 0.03 kg/Mg mass emission limit selected is somewhat higher that the short-term test result of 0.02 kg/Mg for the fourth thermal oxidizer. However, the selected mass emission limit allows for long-term process and control equipment variability.

We are also establishing an alternative percentage reduction efficiency standard to address situations in which a facility cannot achieve the 0.03 kg/Mg mass emission limit due to process variations while operating technology representative of the MACT floor level of control. Considering the data from all four of the sources with well-designed and -operated thermal oxidizers representative of the MACT floor level of control, and considering the variability in performance of a thermal oxidizer representative of the MACT floor level of control, we have selected a 96 percent destruction efficiency as the alternative standard. Sources subject to these emission standards would be allowed to demonstrate compliance by either meeting a mass emission limit of 0.03 kg/Mg (0.05 lb/ton) of product or achieving a 96 percent destruction efficiency. For example, a facility with a high inlet formaldehyde concentration may not be able to achieve the mass emission limit but could comply with the percentage reduction.

D. Selection of Test Methods

Under the proposed NESHAP, you must conduct a performance test using formaldehyde as a surrogate measure for all organic HAPs. You must measure formaldehyde emissions using EPA Reference Method 316 or any other alternative method that has been approved by the Administrator under § 63.7(f) of the general provisions.

The EPA Reference Method 316, ''Sampling and Analysis for Formaldehyde Emissions from Stationary Sources in the Mineral Wool and Wool Fiberglass Industries,'' is a manual test method that measures formaldehyde by spectrophotometry using the modified pararosaniline method. The method was validated at a mineral wool manufacturing facility, which has been determined to be a similar source, according to the procedures in EPA Validation Method 301, 40 CFR part 63, appendix A. In Method 316, gases are withdrawn isokinetically from an emission source and are collected in high-purity water. Formaldehyde present in the emissions is highly soluble in water. Formaldehyde in the sample reacts with acidic pararosaniline and sodium sulfite, forming a purple chromophore. The intensity of the purple color, measured spectrophotometrically, provides a measure of the formaldehyde concentration in the sample.

Using the results of the performance tests, you would use the equations and procedures in the rule to convert the formaldehyde emission rate into either a kg/Mg (lb/ton) of product emission rate or a percentage removal value. Appendix A to the proposed standards contains a method for determining the free-formaldehyde content of urea-formaldehyde resins. Appendix B to the proposed standards contains a method for determining the loss-on-ignition of the product. You must monitor these parameters to ensure compliance with the standards between performance tests.

E. Selection of Operating Standards and Monitoring Requirements

We believe that the operating standards and monitoring requirements discussed in sections II.C and II.E, respectively, will provide sufficient information needed to determine continuing compliance or identify operating problems at the source. At the same time, the provisions are not labor intensive, do not require expensive or complex equipment, and do not require burdensome recordkeeping. For example, temperature monitoring and recording equipment are standard features on thermal oxidizers. Resin free-formaldehyde content is a standard purchase specification for resin. Finally, the solids content of the urea-formaldehyde resins, the urea-formaldehyde solids content, the binder formulation formaldehyde content, and loss-on-ignition value of the product manufactured are monitored and recorded as part of normal product quality control procedures.

V. What Are the Administrative Requirements of These Proposed NESHAP?

A. Executive Order 12866—Regulatory Planning and Review

Under Executive Order 12866 (58 FR 51735, October 4, 1993), EPA must determine whether the regulatory action is ''significant'' and, therefore, subject to

review by the Office of Management and Budget (OMB) and the requirements of the Executive Order. The Executive Order defines ''significant regulatory action'' as one that is likely to result in a rule that may:

(1) Have an annual effect on the economy of $100 million or more or adversely affect in a material way the economy, a sector of the economy, productivity, competition, jobs, the environment, public health or safety, or State, local, or tribal governments or communities;

(2) Create a serious inconsistency or otherwise interfere with an action taken or planned by another agency;

(3) Materially alter the budgetary impact of entitlements, grants, user fees, or loan programs, or the rights and obligations of recipients thereof; or

(4) Raise novel legal or policy issues arising out of legal mandates, the President's priorities, or the principles set forth in the Executive Order.

It has been determined that this action is not a ''significant regulatory action'' under the terms of the Executive Order and is, therefore, not subject to OMB review. However, an economic analysis of the proposed NESHAP was prepared and is available in the docket (Docket A–97–54).

B. Executive Order 13045—Protection of Children From Environmental Health Risks and Safety Risks

Executive Order 13045 (62 FR 19885, April 23, 1997) applies to any rule that (1) Is determined to be ''economically significant'' as defined under Executive Order 12866, and (2) concerns the environmental health or safety risk that EPA has reason to believe may have a disproportionate effect on children. If the regulatory action meets both criteria, EPA must evaluate the environmental health or safety effects of the planned rule on children, and explain why the planned regulation is preferable to other potentially effective and reasonably feasible alternatives considered by EPA.

The EPA interprets Executive Order 13045 as applying only to those regulatory actions that are based on health or safety risks, such that the analysis required under section 5–501 of the Order has the potential to influence the regulation. This proposed rule is not subject to Executive Order 13045 because it is not an economically significant regulatory action as defined by Executive Order 12866, and it is based on technology performance and not on health or safety risks.

C. Executive Order 13132—Federalism

Executive Order 13132, entitled ''Federalism'' (64 FR 43255, August 10, 1999), requires EPA to develop an accountable process to ensure ''meaningful and timely input by State and local officials in the development of regulatory policies that have federalism implications.'' ''Policies that have federalism implications'' is defined in the Executive Order to include regulations that have ''substantial direct effects on the States, on the relationship between the national government and the States, or on the distribution of power and responsibilities among the various levels of government.'' Under Executive Order 13132, EPA may not issue a regulation that has federalism implications, that imposes substantial direct compliance costs, and that is not required by statute, unless the Federal government provides the funds necessary to pay the direct compliance costs incurred by State and local governments, or EPA consults with State and local officials early in the process of developing the proposed regulation. The EPA also may not issue a regulation that has federalism implications and that preempts State law unless the Agency consults with State and local officials early in the process of developing the proposed regulation.

If EPA complies by consulting, Executive Order 13132 requires EPA to provide to OMB, in a separately identified section of the preamble to the rule, a federalism summary impact statement (FSIS). The FSIS must include a description of the extent of EPA's prior consultation with State and local officials, a summary of the nature of their concerns and the agency's position supporting the need to issue the regulation, and a statement of the extent to which the concerns of State and local officials have been met. Also, when EPA transmits a draft final rule with federalism implications to OMB for review pursuant to Executive Order 12866, EPA must include a certification from the Agency's Federalism Official stating that EPA has met the requirements of Executive Order 13132 in a meaningful and timely manner.

This proposed rule will not have substantial direct effects on the States, on the relationship between the national government and the States, or on the distribution of power and responsibilities among the various levels of government, as specified in Executive Order 13132. This determination has been made since none of the affected facilities under this proposed rule are owned or operated by State or local governments. Thus, the requirements of section 6 of the Executive Order do not apply to this rule. Although section 6 of Executive Order 13132 does not apply to this rule, EPA did consult with State and local officials in developing the proposed rule.

D. Executive Order 13084—Consultation and Coordination With Indian Tribal Governments

Under Executive Order 13084, EPA may not issue a regulation that is not required by statute that significantly or uniquely affects the communities of Indian tribal governments, and that imposes substantial direct compliance costs on those communities unless the Federal government provides the funds necessary to pay the direct compliance costs incurred by the tribal governments or EPA consults with those governments. If EPA complies by consulting, Executive Order 13084 requires EPA to provide to OMB, in a separately identified section of the preamble to the rule, a description of the extent of the EPA's prior consultation with representatives of affected tribal governments, a summary of the nature of their concerns, and a statement supporting the need to issue the regulation. In addition, Executive Order 13084 requires EPA to develop an effective process permitting elected officials and other representatives of Indian tribal governments ''to provide meaningful and timely input in the development of regulatory policies on matters that significantly or uniquely affect their communities.''

Today's proposed rule does not significantly or uniquely affect the communities of Indian tribal governments. No affected facilities are owned or operated by Indian tribal governments. Accordingly, the requirements of section 3(b) of Executive Order 13084 do not apply to this proposed rule.

E. Unfunded Mandates Reform Act

Title II of the Unfunded Mandates Reform Act of 1995 (UMRA), Pub. L. 104–4, establishes requirements for Federal agencies to assess the effects of their regulatory actions on State, local, and tribal governments and the private sector. Under section 202 of the UMRA, EPA generally must prepare a written statement, including a cost-benefit analysis, for proposed and final rules with ''Federal mandates'' that may result in expenditures by State, local, and tribal governments, in the aggregate, or by the private sector, of $100 million or more in any 1 year. Before promulgating an EPA rule for which a written statement is needed, section 205 of the UMRA generally requires EPA to identify and consider a reasonable number of regulatory alternatives and

adopt the least costly, most cost-effective, or least burdensome alternative that achieves the objectives of the rule. The provisions of section 205 do not apply when they are inconsistent with applicable law. Moreover, section 205 allows EPA to adopt an alternative other than the least costly, most cost-effective, or least burdensome alternative if the Administrator publishes with the final rule an explanation why that alternative was not adopted. Before EPA establishes any regulatory requirements that may significantly or uniquely affect small governments, it must have developed, under section 203 of the UMRA, a small government agency plan. The plan must provide for notifying potentially affected small governments, enabling officials of affected small governments to have meaningful and timely input in the development of the EPA regulatory proposals with significant Federal intergovernmental mandates, and informing, educating, and advising small governments on compliance with the regulatory requirements.

The EPA has determined that this proposed rule does not contain a Federal mandate that may result in expenditures of $100 million or more for State, local, and tribal governments, in the aggregate, or the private sector in any 1 year. The total nationwide capital cost for the proposed standard is estimated at $5.3 million; the annualized nationwide cost is estimated at $2.4 million. Thus, today's proposed rule is not subject to the requirements of sections 202 and 205 of the UMRA.

F. Regulatory Flexibility Act

The Regulatory Flexibility Act (RFA) generally requires an agency to conduct a regulatory flexibility analysis of any rule subject to notice and comment rulemaking requirements under the Administrative Procedure Act or any other statue unless the agency certifies that the rule will not have a significant economic impact on a substantial number of small entities. Small entities include small businesses, small organizations, and small governmental jurisdictions.

For purposes of assessing the impacts of today's proposed rule on small entities, small entity is defined as: (1) a small business that has less than 750 employees; (2) a small governmental jurisdiction that is a government of a city, county, town, school district or special district with a population of less than 50,000; and (3) a small organization that is any non-for-profit enterprise which is independently owned and operated and is not dominant in its field.

After considering the economic impacts of today's proposed rule on small entities, I certify that this action will not have a significant economic impact on a substantial number of small entities. We have determined that only two of the nine companies producing wet-formed fiberglass mat are small businesses. One of these small businesses is not anticipated to incur emission control costs because it already has controls in place which should achieve the MACT emission levels. Therefore, only one small firm in the wet-formed fiberglass mat production industry is expected to incur emission control costs as a result of the regulation. This small business is expected to incur control costs that represent 0.3441 percent of current sales revenues, a cost-to-sales ratio substantially below 1 percent (the criterion established as a first indicator of the potential for significant impact). As a result of the increased costs of emission controls, this small entity in the affected industry will likely increase the price of its product in response to a market change in price, will absorb the cost increase with no price increase, or will respond with a combination of these responses. Since the estimated costs as a percentage of sales are relatively minimal, it is anticipated that the regulation will not have a significant impact on this company's profitability.

Although this proposed rule will not have a significant economic impact on a substantial number of small entities, EPA nonetheless has tried to reduce the impact of this proposed rule on small entities by providing flexibility by offering a choice of compliance and monitoring options. Compliance options include mass emission limits or percent reduction standards. Compliance with the proposed standard can be achieved through the use of a thermal oxidizer or other control device. Pollution prevention practices, such as process modifications, are also included in the proposed rule. We continue to be interested in the potential impacts of the proposed rule on small entities and welcome comments on issues related to such impacts.

G. Paperwork Reduction Act

The information collection requirements in this proposed rule have been submitted for approval to OMB under the requirements of the Paperwork Reduction Act, 44 U.S.C. 3501 *et seq.* An Information Collection Request (ICR) document has been prepared by EPA (ICR No. ____), and a copy may be obtained from Sandy Farmer, U.S. Environmental Protection Agency, Office of Environmental Information, Collection Strategies Division (2822), 1200 Pennsylvania Avenue, NW, Washington, DC 20460, or by calling (202) 260–2740.

The information requirements contained in the proposed NESHAP are necessary to determine initial and continuous compliance with the emission standards. The proposed information requirements include the notification, recordkeeping, and reporting requirements of the NESHAP general provisions, authorized under section 114 of the CAA, which are mandatory for all owners or operators subject to national emission standards. All information submitted to EPA for which a claim of confidentiality is made is safeguarded according to Agency policies in 40 CFR part 2, subpart B. The proposed rule does not require any notifications or reports beyond the minimum required by the general provisions. Proposed subpart HHHH requires additional records of information specific to the wet-formed fiberglass mat production industry which are needed to determine compliance with the rule.

The annual public reporting and recordkeeping burden for this collection is estimated at 2,983 labor hours per year at an annual cost of $98,183. This estimate includes an initial performance test and report (with repeat tests where needed); one-time preparation of a startup, shutdown, and malfunction plan with semiannual reports of any event in which the procedures in the plan were not followed; semiannual excess emissions reports; notifications; the operations, maintenance, and monitoring plan; and recordkeeping. The annualized capital cost associated with monitoring requirements is estimated at $2,300.

Burden means the total time, effort, or financial resources expended by persons to generate, maintain, retain, or disclose or provide information to or for a Federal agency. This includes the time needed to review instructions; develop, acquire, install, and utilize technology and systems for the purpose of collecting, validating, verifying, processing, maintaining, disclosing, and providing information; adjust the existing ways to comply with any previously applicable instructions and requirements; train personnel to respond to a collection of information; search existing data sources; complete and review the collection of information; and transmit or otherwise disclose the information.

An agency may not conduct or sponsor, and a person is not required to respond to, a collection of information unless it displays a currently valid OMB

control number. The OMB control numbers for the EPA's regulations are listed in 40 CFR part 9 and 48 CFR chapter 15.

Send comments on the Agency's need for this information, the accuracy of the provided burden estimates, and any suggested methods for minimizing respondent burden, including the use of automated collection techniques, to the Director, Collection Strategies Division, Office of Environmental Information, U.S. Environmental Protection Agency, 1200 Pennsylvania Avenue, NW, Washington, DC 20460, and to the Office of Information and Regulatory Affairs, Office of Management and Budget, 725 17th Street NW, Washington, DC 20503, marked ''Attention: Desk Officer for EPA.'' Refer to ICR 1964.01 in any correspondence. Because OMB is required to make a decision concerning the ICR between 30 and 60 days after May 26, 2000. A comment to OMB is most likely to have its full effect if OMB receives it by June 26, 2000. The final rule will respond to any OMB or public comments on the information collection requirements contained in this proposal.

H. National Technology Transfer and Advancement Act

Section 12(d) of the National Technology Transfer and Advancement Act (NTTAA), Public Law 104–113, directs all Federal Agencies to use voluntary consensus standards in regulatory and procurement activities unless to do so would be inconsistent with applicable law or otherwise impractical. Voluntary consensus standards (VCS) are technical standards (such as materials specifications, test methods, sampling procedures, and business practices) which are developed or adopted by voluntary consensus standard bodies. The NTTAA requires Federal agencies to provide Congress, through annual reports to OMB, with explanations when an agency does not use available and applicable voluntary consensus standards.

Consistent with the NTTAA, the EPA conducted searches to identify voluntary consensus standards for the EPA's emissions sampling and analysis reference methods and industry recommended materials analysis procedures cited in this rule. Candidate voluntary consensus standards for materials analysis were identified for product loss-on-ignition and free formaldehyde content. Consensus comments provided by industry experts were that the candidate standards did not meet industry materials analysis requirements. Therefore, EPA has determined these VCS were impractical for the wet-formed fiberglass mat production NESHAP. The EPA, in consultation with the Technical Association for the Pulp and Paper Industry (TAPPI), has formulated industry-specific materials analysis consensus standards which are proposed in this rule.

The EPA search to identify VCS for the EPA's emissions sampling and analysis reference methods cited in this proposed rule identified six candidate standards that appeared to have possible use in lieu of EPA standard reference methods. However, after reviewing available standards, EPA determined that four of the candidate consensus standards identified for measuring emissions of the HAPs or surrogates subject to emission standards in the proposed rule would not be practical due to lack of equivalency, documentation, and validation data. Two of the remaining candidate consensus standards are new standards under development that EPA plans to follow, review and consider adopting at a later date.

The EPA takes comment on compliance demonstration requirements proposed in this rulemaking and specifically invites the public to identify potentially-applicable VCS. Commentors should also explain why this proposed rule should adopt these VCS in lieu of EPA's test methods. Emission test methods and performance specifications submitted for evaluation should be accompanied with a basis for the recommendation, including method validation data and the procedure used to validate the candidate method (if method other than Method 301, 40 CFR part 63, appendix A was used).

Section 63.2993 of the proposed NESHAP lists the EPA testing methods. These testing methods have been used by States and industry for more than 10 years.

List of Subjects in 40 CFR Part 63

Environmental protection, Air pollution control, Hazardous substances, Reporting and recordkeeping requirements.

Dated: May 12, 2000.

Carol M. Browner,

Administrator.

For the reasons set out in the preamble, part 63 of title 40, chapter I, of the Code of Federal Regulations is proposed to be amended as follows:

PART 63—NATIONAL EMISSION STANDARDS FOR HAZARDOUS AIR POLLUTANTS FOR SOURCE CATEGORIES

1. The authority citation for part 63 continues to read as follows:

Authority: 42 U.S.C. 7401 *et seq.*

2. Part 63 is amended by adding subpart HHHH to read as follows:

Subpart HHHH—National Emission Standards for Hazardous Air Pollutants for Wet-Formed Fiberglass Mat Production

Sec.

Introduction and Applicability

63.2980 What is the purpose of this subpart?
63.2981 Does this subpart apply to me?
63.2982 Where can I find definitions of key words used in this subpart?

Standards

63.2983 What emission standards must I meet?
63.2984 What operating standards must I meet?
63.2985 When must I meet these standards?
63.2986 How do I comply with the standards?

Operation, Maintenance, and Monitoring Plan

63.2987 What must my operation, maintenance, and monitoring plan include?
63.2988 How do I get my operation, maintenance, and monitoring plan approved?
63.2989 How do I change my operation, maintenance and monitoring plan?
63.2990 Can I conduct short-term experimental production runs that cause parameters to deviate from operating standards?

Performance Test Requirements

63.2991 When must I conduct performance tests?
63.2992 How do I conduct a performance test?
63.2993 What test methods must I use in conducting performance tests?
63.2994 How do I verify the performance of monitoring equipment?
63.2995 What equations must I use to determine compliance?

Monitoring, Recordkeeping, and Reporting Requirements

63.2996 What must I monitor?
63.2997 What are the requirements for monitoring devices?
63.2998 What records must I maintain?
63.2999 For how long must I maintain records?
63.3000 What reports must I submit?

Other Requirements and Information

63.3001 What portions of the general provisions apply to me?
63.3002 Who enforces this subpart?
63.3003 Incorporation by reference.

63.3004 What definitions must I understand?
63.3005— 63.3079 [Reserved].

Tables

Table 1 of Subpart HHHH—Minimum Requirements for Monitoring and Recordkeeping
Table 2 of Subpart HHHH—Applicability of General Provisions (40 CFR part 63, subpart A) to Subpart HHHH

Appendices

Appendix A to Subpart HHHH to Part 63—Method for Determining Free-Formaldehyde in Urea-Formaldehyde Resins by Sodium Sulfite (Iced & Cooled)
Appendix B to Subpart HHHH to Part 63—Method for the Determination of Loss-on-Ignition

Subpart HHHH—National Emission Standards for Hazardous Air Pollutants for Wet-Formed Fiberglass Mat Production

Introduction and Applicability

§ 63.2980 What is the purpose of this subpart?

This subpart establishes national emission standards for hazardous air pollutants for existing, new, and reconstructed drying and curing ovens at facilities that produce wet-formed fiberglass mat.

§ 63.2981 Does this subpart apply to me?

You must comply with this subpart if you meet the criteria in paragraphs (a), (b), (b)(1) or paragraph (b)(2) of this section:

(a) You own or operate a drying and curing oven at a wet-formed fiberglass mat production facility.

(b) The facility at which your drying and curing oven is located emits or has the potential to emit in the aggregate either:

(1) A single hazardous air pollutant at a rate of 9.07 megagrams (10 tons) or more per year; or

(2) Any combination of hazardous air pollutants at a rate of 22.68 megagrams (25 tons) or more per year.

§ 63.2982 Where can I find definitions of key words used in this subpart?

The definitions of keywords used in this subpart are in §§ 63.2 and 63.3004.

Standards

§ 63.2983 What emission standards must I meet?

(a) You must control the formaldehyde emissions from each drying and curing oven by either:

(1) Limiting emissions of formaldehyde to 0.03 kilograms or less per megagram (0.05 pounds per ton) of fiberglass mat produced; or

(2) Reducing uncontrolled formaldehyde emissions by 96 percent or more.

(b) [Reserved]

§ 63.2984 What operating standards must I meet?

(a) You must maintain operating parameters within established limits or ranges specified in your operation, maintenance, and monitoring plan described in § 63.2987. If any of the specified parameters deviate from the limit or range specified in the operation, maintenance, and monitoring plan, an operating parameter excursion occurs and must be addressed according to paragraph (b) of this section. The operating parameters in paragraphs (a)(1) through (7) of this section must be maintained:

(1) You must operate the thermal oxidizer so that the average operating temperature in any 3-hour block period does not fall below the temperature established during your performance test and specified in your approved operation, maintenance, and monitoring plan.

(2) You must maintain the process or emission control device parameters within the ranges established during the performance test and specified in your approved operation, maintenance, and monitoring plan.

(3) You must not use a resin with a free-formaldehyde content greater than that of the resin used during your performance test and specified in your approved operation, maintenance, and monitoring plan.

(4) You must not use a binder formulation with a urea formaldehyde content greater than that of the binder formulation used during your performance test and specified in your approved operation, maintenance, and monitoring plan.

(5) You must not use a urea-formaldehyde (UF) resin with a solids content greater than that of the resin used during your performance test and specified in your approved operation, maintenance, and monitoring plan.

(6) You must not manufacture a product with a higher UF resin solids content per ton of product (including any material trimmed from the final product) than that of the product manufactured during your performance test and specified in your approved operation, maintenance, and monitoring plan.

(7) You must not produce products that have a loss-on-ignition value greater than that of the product manufactured during your performance test and specified in your approved operation, maintenance, and monitoring plan.

(b) When you detect that an operating parameter deviates from the limit or range established in paragraph (a) of this section, you must initiate corrective actions within 1 hour according to the provisions of your operation, maintenance, and monitoring plan. The corrective actions must be completed in an expeditious manner as specified in the operation, maintenance, and monitoring plan.

(c) You must maintain and inspect control devices according to the procedures specified in the operation, maintenance, and monitoring plan.

(d) You must reference the operating standards and their allowable ranges or limits and your operation, maintenance, and monitoring plan in the 40 CFR part 70 operating permit application for the drying and curing oven.

(e) If you use a thermal oxidizer or other control device to achieve the emission standards in § 63.2983, you must capture and convey the formaldehyde emissions from each drying and curing oven according to the procedures in chapters 3 and 5 of ''Industrial Ventilation: A Manual of Recommended Practice (22nd Edition).'' This publication is incorporated by reference in § 63.3003.

§ 63.2985 When must I meet these standards?

(a) Existing drying and curing ovens must be in compliance with this subpart no later than [3 years after date final rule is published in the **Federal Register**].

(b) New or reconstructed drying and curing ovens must be in compliance with this subpart at startup or by [the date final rule is published in the **Federal Register**], whichever is later. For the purpose of this subpart, a new drying and curing oven is defined as each drying and curing oven that commences construction or reconstruction after May 26, 2000.

§ 63.2986 How do I comply with the standards?

(a) You must install, maintain, and operate a thermal oxidizer or other control device or implement a process modification that reduces formaldehyde emissions from each drying and curing oven to the limits specified in the emission standards in § 63.2983.

(b) You must comply with the operating standards of this subpart. The operating standards prescribe the requirements for demonstrating continuous compliance, based on the operation, maintenance, and monitoring plan. Requirements for operating standards are specified in § 63.2984.

(c) You must conduct a performance test to demonstrate compliance for each

drying and curing oven subject to the emission standards of this subpart and to establish the limits or ranges for process or control device parameters that will be monitored to demonstrate continuous compliance. You must repeat the test every 5 years as part of renewing your 40 CFR part 70 operating permit. A performance test is also required to change the limit or range for any operating parameter specified in the operation, maintenance, and monitoring plan. In conducting performance tests, you must meet the requirements of § 63.7 for test dates; notifications; quality assurance program; testing facilities; conduct of the test; use of an alternate test method; data analysis, recordkeeping, and reporting; and requesting a test to be waived. You must also conduct the tests under the conditions specified in § 63.2992 and after verifying the performance of monitoring equipment as specified in § 63.2994.

(d) You must install, calibrate, maintain, and operate devices that monitor the parameters specified in your approved operation, maintenance, and monitoring plan at the frequency specified in the plan.

(e) You must prepare and follow a written operation, maintenance, and monitoring plan. The plan must be submitted to the Administrator for review and approval and must be referenced by your 40 CFR part 70 operating permit. The plan must include, as a minimum, the information specified in § 63.2987.

(f) You must comply with the monitoring, recordkeeping, and reporting requirements of this subpart. You must perform the monitoring, recordkeeping, and reporting required in §§ 63.2996 through 63.3000.

Operation, Maintenance, and Monitoring Plan

§ 63.2987 What must my operation, maintenance, and monitoring plan include?

(a) You must prescribe the monitoring that will be performed to ensure compliance with the standards in this subpart. Minimum monitoring requirements are listed in table 1 of this subpart. Your plan must specify the items listed in paragraphs (a)(1) through (3) of this section:

(1) Each process and control device to be monitored, the type of monitoring device that will be used, and the operating parameters that will be monitored.

(2) A monitoring schedule that specifies the frequency that the parameter values will be determined and recorded.

(3) The limits or ranges for each parameter that represent continuous compliance with the emission standards in § 63.2983. Limits and ranges must be based on values of the monitored parameters recorded during performance tests.

(b) You must establish routine and long-term maintenance and inspection schedules for each control device. You must incorporate in the schedules the control device manufacturer's recommendations for maintenance and inspections or equivalent procedures. If you use a thermal oxidizer, the maintenance schedule must include procedures for annual or more frequent inspection of the thermal oxidizer to ensure that the structural and design integrity of the combustion chamber is maintained. At a minimum, you must meet the requirements of paragraphs (b)(1) through (10) of this section:

(1) Inspect all burners, pilot assemblies, and pilot sensing devices for proper operation. Clean pilot sensor if necessary.

(2) Ensure proper adjustment of combustion air and adjust if necessary.

(3) Inspect, when possible, all internal structures (such as baffles) to ensure structural integrity per the design specifications.

(4) Inspect dampers, fans, and blowers for proper operation.

(5) Inspect motors for proper operation.

(6) Inspect, when possible, combustion chamber refractory lining. Clean and repair or replace lining if necessary.

(7) Inspect the thermal oxidizer shell for proper sealing, corrosion, and hot spots.

(8) For the burn cycle that follows the inspection, document that the thermal oxidizer is operating properly and make any necessary adjustments.

(9) Generally observe whether the equipment is maintained in good operating condition.

(10) Complete all necessary repairs as soon as practicable.

(c) You must establish procedures for responding to operating parameter excursions. At a minimum, the procedures in paragraphs (c)(1) through (3) of this section must include:

(1) Procedures for determining the cause of the operating parameter excursion.

(2) Actions for correcting the excursion and returning the operating parameters to the allowable ranges or limits.

(3) Procedures for recording the times that the excursion began and ended, and corrective actions were initiated and completed.

(d) Your plan must specify the recordkeeping procedures to document compliance with the emissions and operating standards. Table 1 of this subpart establishes the minimum recordkeeping requirements.

§ 63.2988 How do I get my operation, maintenance, and monitoring plan approved?

You must obtain approval for your operation, maintenance, and monitoring plan. The steps in paragraphs (a) and (b) of this section are required to obtain approval of your plan:

(a) You must submit a draft plan to the Administrator for approval 60 days before conducting the performance tests required in § 63.2991.

(b) Within 60 days after conducting the performance tests required in § 63.2991, you must submit the final plan, including the results of the performance tests, to the Administrator for approval. In addition, you must submit the parameter levels or ranges to the permit Agency for approval.

§ 63.2989 How do I change my operation, maintenance and monitoring plan?

Changes to your operation, maintenance and monitoring plan require the approval of the Administrator.

(a) If you are revising the ranges or limits established for your operating standards, you must meet the requirements in paragraphs (a)(1) through (4) of this section:

(1) Submit a request to and obtain approval from the Administrator to conduct a performance test to revise your operating standard ranges or limits.

(2) After you receive approval from the Administrator, conduct a performance test to demonstrate that compliance with the emissions standards can be achieved at the revised operating conditions.

(3) Submit the performance test results and the revised operating, maintenance, and monitoring plan to the Administrator for approval.

(4) Pending Administrator approval of the revised operating, maintenance, and monitoring plan, you must comply with the provisions of your approved plan.

(b) If you are revising an aspect of the plan that does not require an additional performance test, for example, maintenance procedures, you must submit only a final plan to the Administrator for approval. Pending the Administrator's approval of the changes, you must comply with the provisions of your approved plan.

§ 63.2990 Can I conduct short-term experimental production runs that cause parameters to deviate from operating standards?

With the approval of the Administrator, you may conduct short-term experimental production runs during which your operating parameters deviate from the limits or ranges in your operating standards. Experimental runs may include, but are not limited to, runs using resin with a higher free-formaldehyde content than specified in the operation, maintenance, and monitoring plan, or using experimental pollution prevention techniques. To conduct a short-term experimental production run, you must complete the requirements in paragraphs (a) and (b)(1) through (6) of this section:

(a) Submit an application to the Administrator for approval at least 30 days before you conduct the test run.

(b) Prepare an application. Your application must include:

(1) The purpose of the experimental run.

(2) Identification of the affected line.

(3) An explanation of how the operating parameters will deviate from the previously approved ranges and limits.

(4) The duration of the experimental run.

(5) The date and time of the experimental run.

(6) A description of any emission testing to be performed during the experimental run.

Performance Test Requirements

§ 63.2991 When must I conduct performance tests?

You must conduct performance tests for each drying and curing oven subject to this subpart under the circumstances listed in paragraphs (a) and (b) of this section:

(a) *Initially.* You must conduct an initial performance test according to the dates specified in § 63.7. This performance test is used to demonstrate initial compliance and establish operating parameter limits and ranges to be used to demonstrate continuous compliance with the emission standards.

(b) *Every 5 Years.* You must conduct a performance test every 5 years as part of renewing your 40 CFR part 70 operating permit.

(c) *To change your operation, maintenance and monitoring plan.* You must conduct a performance test according to the requirements specified in § 63.2989.

§ 63.2992 How do I conduct a performance test?

(a) You must verify the performance of monitoring equipment as specified in § 63.2994.

(b) You must conduct the performance test according to the procedures in § 63.7.

(c) You must conduct the performance test under the conditions listed in paragraphs (c)(1) through (6) of this section:

(1) The resin must have the highest specified free-formaldehyde content that will be used.

(2) The binder formulation must have the highest urea formaldehyde content of all formulations that will be used.

(3) The resin used must have the highest UF resin solids content of all resins that will be used.

(4) The product made must have the highest UF resin solids content per ton of product of all products that will be manufactured.

(5) The product made must have the highest loss-on-ignition of all products that will be manufactured.

(6) You must operate at the maximum feasible production rate for the specific product.

(d) During the test, you must monitor and record the operating parameters that you will use to demonstrate continuous compliance after the test. These parameters are listed in table 1 of this subpart.

§ 63.2993 What test methods must I use in conducting performance tests?

(a) EPA Reference Method 1 (40 CFR part 60, appendix A) for selecting the sampling port location and the number of sampling ports.

(b) EPA Reference Method 2 (40 CFR part 60, appendix A) for measuring the volumetric flow rate.

(c) EPA Reference Method 316 (40 CFR part 60, appendix A) for measuring the concentration of formaldehyde.

(d) The method contained in appendix A of this subpart for determining the free-formaldehyde resin solids content or the resin purchase specification and the vendor specification sheet for each resin lot.

(e) The method in appendix B of this subpart for determining product loss-on-ignition.

§ 63.2994 How do I verify the performance of monitoring equipment?

Before conducting the performance test, you must take the steps listed in paragraphs (a) and (b) of this section:

(a) Install and calibrate all process equipment, control devices, and monitoring equipment.

(b) Conduct a performance evaluation of the continuous monitoring system (CMS) according to § 63.8(e) which specifies the general requirements and requirements for notifications, the site-specific performance evaluation plan, conduct of the performance evaluation, and reporting of performance evaluation results.

(c) If you use a thermal oxidizer, the temperature monitoring device must meet the performance and equipment specifications listed in paragraphs (c)(1) through (3) of this section:

(1) The temperature monitoring device must be installed at the exit of the combustion zone of each thermal oxidizer.

(2) The recorder response range must include zero and 1.5 times the average temperature required in § 63.2984(a)(1).

(3) The measurement method or reference method for calibration must be a National Institute of Standards and Technology calibrated reference thermocouple-potentiometer system or an alternate reference subject to the approval of the Administrator.

§ 63.2995 What equations must I use to determine compliance?

(a) *Percent reduction for formaldehyde.* To determine compliance with the percent reduction formaldehyde emission standard, use equation 1 as follows:

$$E_f = \frac{M_i - M_o}{M_i} \times 100 \qquad \text{(Eq. 1)}$$

Where:

E_f=Formaldehyde control efficiency, percent.

M_i=Mass flow rate of formaldehyde entering the control device, kilograms (pounds) per hour.

M_o=Mass flow rate of formaldehyde exiting the control device, kilograms (pounds) per hour.

(b) *Formaldehyde mass emissions rate.* To determine compliance with the kilogram per megagram (pound per ton) formaldehyde emission standard, use equation 2 as follows:

$$E = \frac{M}{P} \qquad \text{(Eq. 2)}$$

Where:

E=Formaldehyde mass emissions rate, kilograms (pounds) of formaldehyde per megagram (ton) of fiberglass mat produced.

M=Formaldehyde mass emissions rate, kilograms (pounds) per hour.

P=The wet-formed fiberglass mat production rate during the emissions sampling period, including any material trimmed from the final product, megagrams (tons) per hour.

(c) *Urea-formaldehyde (UF) resin solids content.* To determine the UF resin solids content, use equation 3 as follows:

$$\%UF = LOI \times A \qquad \text{(Eq. 3)}$$

Where:

%UF=Percent of urea-formaldehyde resin solids of wet-formed fiberglass mat produced, percent.

A=Ratio of the urea-formaldehyde resin solids to the total solids content of the binder formulation.

LOI=The loss-on-ignition of the wet-formed fiberglass mat, percent.

Monitoring, Recordkeeping, and Reporting Requirements

§ 63.2996 What must I monitor?

You must monitor the parameters listed in table 1 of this subpart and any other parameters specified on your operation, maintenance, and monitoring plan. The parameters must be monitored, at a minimum, at the corresponding frequencies listed in table 1 of this subpart.

§ 63.2997 What are the requirements for monitoring devices?

(a) If formaldehyde emissions are controlled using a thermal oxidizer, you must meet the requirements in paragraphs (a)(1) through (2) of this section:

(1) Install, calibrate, maintain, and operate a device to monitor and record continuously the thermal oxidizer temperature consistent with manufacturer's recommendations.

(2) Continuously monitor the thermal oxidizer temperature and determine and record average temperature in 15-minute and 3-hour block averages. You may determine the average temperature more frequently than every 15 minutes and every 3 hours, but not less frequently.

(b) If formaldehyde emissions are controlled by process modifications or a control device other than a thermal oxidizer, you must install, calibrate, maintain, and operate devices to monitor the parameters established in your operation, maintenance, and monitoring plan at the frequency established in the plan.

§ 63.2998 What records must I maintain?

You must maintain records according to the procedures of § 63.10. You are required to maintain the following types of records listed in paragraphs (a), (b), (c), (d) and (e)(1) through (4) of this section:

(a) All information required by the applicable general provisions. Table 2 of this subpart presents the applicable requirements of the general provisions.

(b) The approved operation, maintenance, and monitoring plan.

(c) Records of values of monitored parameters listed in table 1 of this subpart.

(d) Records of maintenance and inspections performed on the control devices.

(e) If an operating parameter excursion occurs, you must record:

(1) The date, time, and duration of the operating parameter excursion.

(2) A brief description of the cause of the operating parameter excursion.

(3) The dates and times at which corrective actions were initiated and completed.

(4) A brief description of the corrective actions taken to return the parameter to the limit or to within the range established in the operation, maintenance, and monitoring plan.

§ 63.2999 For how long must I maintain records?

You must maintain each record required by this subpart for 5 years. You must maintain the most recent 2 years of records at the facility. The remaining 3 years of records may be retained offsite.

§ 63.3000 What reports must I submit?

(a) You must submit all reports and notifications required by the applicable general provisions. Table 2 of this subpart presents the applicable requirements of the general provisions.

(b) You must include in the performance test reports required by § 63.10(d)(2) the values measured during the performance test for operating parameters listed in table 1 of this subpart. For the thermal oxidizer temperature, you must include 15-minute averages and the average for the three 1-hour test runs.

(c) You must submit to the Administrator the startup, shutdown, and malfunction plan required in § 63.6(e)(3) within 180 days of the compliance date. You must submit reports of any revisions to the plan semiannually. If no revisions are made within a semiannual period, you are not required to submit a report.

(d) If an operating parameter excursion occurs, you must comply with the reporting requirements for excess emissions and parameter monitoring exceedances in § 63.10(e)(3), which specifies the reporting frequency, excess emissions report content, and summary report content. In addition to the information required by § 63.10(e)(3), the report must contain the information recorded as a result of the operating parameter excursion, including the dates and times when the excursion commenced, corrective actions were taken, and the excursion ended and descriptions of the cause of the excursion and of the corrective actions taken. As required by § 63.10(e)(3), you must report quarterly if an excursion occurs, semiannually if no excursions occur.

Other Requirements and Information

§ 63.3001 What portions of the general provisions apply to me?

You must comply with the requirements of the general provisions of subpart A of this part, as specified in table 2 of this subpart.

§ 63.3002 Who enforces this subpart?

If the Administrator has delegated authority to your State, the State is the primary enforcement authority. If the Administrator has not delegated authority to your State, only EPA enforces this subpart.

§ 63.3003 Incorporation by reference.

(a) The following material is incorporated by reference in this section: chapters 3 and 5 of ''Industrial Ventilation: A Manual of Recommended Practice,'' American Conference of Governmental Industrial Hygienists, (22nd edition, 1995). The incorporation by reference of this material will be approved by the Director of the Office of the Federal Register as of the date of publication of the final rule according to 5 U.S.C. 552(a) and 1 CFR part 51. This material is incorporated as it exists on the date of approval and notice of any change in the material will be published in the **Federal Register**.

(b) The materials referenced in this section are incorporated by reference and are available for inspection at the Office of the Federal Register, 800 North Capital Street NW, Suite 700, 7th Floor, Washington, DC. The material is also available for purchase from the following address: Customer Service Department, American Conference of Governmental Industrial Hygienists (ACGIH), 1330 Kemper Meadow Drive, Cincinnati, OH 45240, telephone number (513) 742–2020.

§ 63.3004 What definitions must I understand?

In addition to the definitions in § 63.2, keywords used in this subpart are defined as follows:

Binder application vacuum exhaust means the exhaust from the vacuum system used to remove excess resin solution from the wet-formed fiberglass mat before it enters the drying and curing oven.

Binder formulation urea formaldehyde content means the urea

formaldehyde concentration of the binder, prepared from the urea-formaldehyde resin and water, as applied to the glass fibers to form the mat.

Drying and curing oven means the process section that evaporates excess moisture from a fiberglass mat and cures the resin that binds the fibers.

Fiberglass mat production rate means the weight of finished fiberglass mat produced per hour of production including any trim removed after the binder is applied and before final packaging.

Loss-on-ignition means the percentage decrease in weight of fiberglass mat measured before and after it has been ignited to burn off the applied binder. The loss-on-ignition is used to monitor the weight percent of binder in fiberglass mat.

Nonwoven wet-formed fiberglass mat manufacturing means the production of a fiberglass mat by bonding glass fibers to each other using a resin solution. Nonwoven wet-formed fiberglass mat manufacturing is also referred to as wet-formed fiberglass mat manufacturing.

Operating parameter excursion means any time an operating parameter deviates from the limit or range established in the operation, maintenance, and monitoring plan.

Thermal oxidizer means an air pollution control device that uses controlled flame combustion inside a combustion chamber to convert combustible materials to noncombustible gases.

§§ 63.3005—63.3079 [Reserved].

TABLE 1 OF SUBPART HHHH.—MINIMUM REQUIREMENTS FOR MONITORING AND RECORDKEEPING

You must monitor these parameters	At this frequency	And record for the monitored parameter
1. Thermal oxidizer temperature [a]	Continuously	15-minute and 3-hour block averages.
2. Other process or control device parameters specified in your operation, maintenance and monitoring (OMM) [b] plan.	As specified in your OMM	As specified in your OMM plan.
3. Resin free-formaldehyde content	For each lot	The value for each lot used during the operating day.
4. Binder formulation urea formaldehyde content	For each product manufactured	The value for each product manufactured during the operating day.
5. Urea-Formaldehyde (UF) resin solids content	For each product manufactured	The value for each product manufactured during the operating day.
6. Product UF resin solids content per ton of product manufactured.	For each product manufactured	The value for each product manufactured during the operating day.
7. Loss-on-ignition	For each product manufactured	The value for each product manufactured during the operating day.
8. Average hourly nonwoven wet-formed fiberglass mat production rate [c].		The value for each product manufactured during the operating day.

[a] Required if a thermal oxidizer is used to control formaldehyde emissions.
[b] Required if process modifications or a control device other than a thermal oxidizer is used to control emissions.
[c] Average production rate is a parameter that must be monitored, however, it is not an operating standard.

TABLE 2 OF SUBPART HHHH.—APPLICABILITY OF GENERAL PROVISIONS (40 CFR PART 63, SUBPART A) TO SUBPART HHHH

Citation	Requirement	Applies to subpart HHHH	Explanation
§ 63.1(a)(1)–(a)(4)	General Applicability	Yes.	
§ 63.1(a)(5)		No	[Reserved].
§ 63.1(a)(6)–(a)(8)		Yes.	
§ 63.1(a)(9)		No	[Reserved].
§ 63.1(a)(10)–(a)(14)		Yes.	
§ 63.1(b)	Initial Applicability Determination	Yes.	
§ 63.1(c)(1)	Applicability After Standard Established	Yes.	
§ 63.1(c)(2)		Yes	Some plants may be area sources.
§ 63.1(c)(3)		No	[Reserved].
§ 63.1(c)(4)–(c)(5)		Yes.	
§ 63.1(d)		No	[Reserved].
§ 63.1(e)	Applicability of Permit Program	Yes.	
§ 63.2	Definitions	Yes	Additional definitions in § 63.3004.
§ 63.3	Units and Abbreviations	Yes.	
§ 63.4(a)(1)–(a)(3)	Prohibited Activities	Yes.	
§ 63.4(a)(4)		No	[Reserved].
§ 63.4(a)(5)		Yes.	
§ 63.4(b)–(c)	Circumvention/Severability	Yes.	
§ 63.5(a)	Construction/Reconstruction	Yes.	
§ 63.5(b)(1)	Existing/Constructed/Reconstruction	Yes.	
§ 63.5(b)(2)		No	[Reserved].
§ 63.5(b)(3)–(b)(6)		Yes.	
§ 63.5(c)		No	[Reserved].
§ 63.5(d)	Application for Approval of Construction/Reconstruction.	Yes.	
§ 63.5(e)	Approval of Construction/Reconstruction	Yes.	
§ 63.5(f)	Approval of Construction/Reconstruction Based on State Review.	Yes.	

TABLE 2 OF SUBPART HHHH.—APPLICABILITY OF GENERAL PROVISIONS (40 CFR PART 63, SUBPART A) TO SUBPART HHHH—Continued

Citation	Requirement	Applies to subpart HHHH	Explanation
§ 63.6(a)	Compliance with Standards and Maintenance—Applicability.	Yes.	
§ 63.6(b)(1)–(b)(5)	New and Reconstructed Sources—Dates	Yes.	
§ 63.6(b)(6)		No	[Reserved].
§ 63.6(b)(7)		Yes.	
§ 63.6(c)(1)–(c)(2)	Existing Sources Dates	Yes	§ 63.2985 specifies dates.
§ 63.6(c)(3)–(c)(4)		No	[Reserved].
§ 63.6(c)(5)		Yes.	
§ 63.6(d)		No	[Reserved].
§ 63.6(e)	Operation and Maintenance Requirements	Yes	§§ 63.2984 and 63.2987 specify additional requirements
§ 63.6(f)	Compliance with Emission Standards	Yes.	
§ 63.6(g)	Alternative Standard	Yes.	
§ 63.6(h)	Compliance with Opacity/Visible Emissions Standards.	No	Subpart HHHH does not specify opacity or visible emission standards.
§ 63.6(i)(1)–(i)(14)	Extension of Compliance	Yes.	
§ 63.6(i)(15)		No	[Reserved].
§ 63.6(i)(16)		Yes.	
§ 63.6(j)	Exemption from Compliance	Yes.	
§ 63.7(a)	Performance Test Requirements—Applicability and Dates.	Yes.	
§ 63.7(b)	Notification of Performance Test	Yes.	
§ 63.7(c)	Quality Assurance Program/Test Plan	Yes.	
§ 63.7(d)	Testing Facilities	Yes.	
§ 63.7(e)	Conduct of Tests	Yes	§§ 63.2991—63.2994 specify additional requirements.
§ 63.7(f)	Alternative Test Method	Yes	EPA retains approval authority.
§ 63.7(g)	Data Analysis	Yes.	
§ 63.7(h)	Waiver of Tests	Yes.	
§ 63.8(a)(1)–(a)(2)	Monitoring Requirements—Applicability	Yes.	
§ 63.8(a)(3)		No	[Reserved].
§ 63.8(a)(4)		Yes.	
§ 63.8(b)	Conduct of Monitoring	Yes.	
§ 63.8(c)(1)–(c)(3)	Continuous Monitoring System (CMS) Operation and Maintenance.	Yes.	
§ 63.8(c)(4)		Yes.	
§ 63.8(c)(5)		No	Subpart HHHH does not specify opacity or visible emission standards.
§ 63.8(c)(6)–(c)(8)		Yes.	
§ 63.8(d)	Quality Control	Yes.	
§ 63.8(e)	CMS Performance Evaluation	Yes.	
§ 63.8(f)(1)–(f)(5)	Alternative Monitoring Method	Yes.	
§ 63.8(f)(6)	Alternative to Relative Accuracy Test	No	Subpart HHHH does not require the use of continuous emissions monitoring systems (CEMS).
§ 63.8(g)(1)	Data Reduction	Yes.	
§ 63.8(g)(2)	Data Reduction	No	Subpart HHHH does not require the use of CEMS or continuous opacity monitoring systems (COMS).
§ 63.8(g)(3)–(g)(5)	Data Reduction	Yes.	
§ 63.9(a)	Notification Requirements—Applicability	Yes.	
§ 63.9(b)	Initial Notifications	Yes.	
§ 63.9(c)	Request for Compliance Extension	Yes.	
§ 63.9(d)	New Source Notification for Special Compliance Requirements.	Yes.	
§ 63.9(e)	Notification of Performance Test	Yes.	
§ 63.9(f)	Notification of Visible Emissions/Opacity Test	No	Subpart HHHH does not specify opacity or visible emission standards.
§ 63.9(g)(1)	Additional CMS Notifications	Yes.	
§ 63.9(g)(2) and (g)(3)		No	Subpart HHHH does not require the use of COMS or CEMS.
§ 63.9(h)(1)–(h)(3)	Notification of Compliance Status	Yes.	
§ 63.9(h)(4)		No	[Reserved].
§ 63.9(h)(5)–(h)(6)		Yes.	
§ 63.9(i)	Adjustment of Deadlines	Yes.	
§ 63.9(j)	Change in Previous Information	Yes.	
§ 63.10(a)	Recordkeeping/Reporting—Applicability	Yes.	
§ 63.10(b)	General Recordkeeping Requirements	Yes	§ 63.2998 includes additional requirements.
§ 63.10(c)(1)	Additional CMS Recordkeeping	Yes.	
§ 63.10(c)(2)–(c)(4)		No	[Reserved].

TABLE 2 OF SUBPART HHHH.—APPLICABILITY OF GENERAL PROVISIONS (40 CFR PART 63, SUBPART A) TO SUBPART HHHH—Continued

Citation	Requirement	Applies to subpart HHHH	Explanation
§ 63.10(c)(5)–(c)(8)		Yes.	
§ 63.10(c)(9)		No	[Reserved].
§ 63.10(c)(10)–(c)(15)		Yes.	
§ 63.10(d)(1)	General Reporting Requirements	Yes	§ 63.3000 includes additional requirements.
§ 63.10(d)(2)	Performance Test Results	Yes	§ 63.3000 includes additional requirements.
§ 63.10(d)(3)	Opacity or Visible Emissions Observations	No	Subpart HHHH does not specify opacity or visible emission standards.
§ 63.10(d)(4)–(d)(5)	Progress Reports/Startup, Shutdown, and Malfunction Reports.	Yes.	
§ 63.10(e)(1)	Additional CMS Reports-General	No	Subpart HHHH does not require CEMS.
§ 63.10(e)(2)	Reporting results of CMS performance evaluations.	Yes.	
§ 63.10(e)(3)	Excess Emissions/CMS Performance Reports.	Yes.	
§ 63.10(e)(4)	COMS Data Reports	No	Subpart HHHH does not specify opacity or visible emission standards.
§ 63.10(f)	Recordkeeping/Reporting Waiver	Yes.	
§ 63.11	Control Device Requirements—Applicability	No	Facilities subject to subpart HHHH do not use flares as control devices.
§ 63.12	State Authority and Delegations	Yes.	
§ 63.13	Addresses	Yes.	
§ 63.14	Incorporation by Reference	No.	
§ 63.15	Availability of Information/Confidentiality	Yes.	

Appendix A to Subpart HHHH to Part 63—Method for Determining Free-Formaldehyde in Urea-Formaldehyde Resins by Sodium Sulfite (Iced & Cooled)

1.0 Scope

This procedure corresponds to the Housing and Urban Development method of determining free-formaldehyde in urea-formaldehyde resins. This method applies to samples that decompose to yield formaldehyde under the conditions of other free-formaldehyde methods. The primary use is for urea-formaldehyde resins.

2.0 Part A—Testing Resins

Formaldehyde will react with sodium sulfite to form the sulfite addition products and liberate sodium hydroxide (NaOH); however, at room temperature, the methylol groups present will also react to liberate NaOH. Titrate at 0 degrees Celsius (°C) to minimize the reaction of the methylol groups.

2.1 Apparatus Required.

2.1.1 Ice crusher.

2.1.2 One 100-milliliter (mL) graduated cylinder.

2.1.3 Three 400-mL beakers.

2.1.4 One 50-mL burette.

2.1.5 Analytical balance accurate to 0.1 milligrams (mg).

2.1.6 Magnetic stirrer.

2.1.7 Magnetic stirring bars.

2.1.8 Disposable pipettes.

2.1.9 Several 5-ounce (oz.) plastic cups.

2.1.10 Ice cube trays (small cubes).

2.2 Materials Required.

2.2.1 Ice cubes (made with distilled water).

2.2.2 A solution of 1 molar (M) sodium sulfite (Na_2SO_3) (63 grams (g) Na_2SO_3/500 mL water (H_2O) neutralized to thymolphthalein endpoint).

2.2.3 Standardized 0.1 normal (N) hydrochloric acid (Hcl).

2.2.4 Thymolphthalein indicator (1.0 g thymolphthalein/199 g methanol).

2.2.5 Sodium chloride (NaCl) (reagent grade).

2.2.6 Sodium hydroxide (NaOH).

2.3 Procedure.

2.3.1 Prepare sufficient quantity of crushed ice for three determinations (two trays of cubes).

2.3.2 Put 70 cubic centimeters (cc) of 1 M Na_2SO_3 solution into a 400-mL beaker. Begin stirring and add approximately 100 g of crushed ice and 2 g of NaCl. Maintain 0 °C during test, adding ice as necessary.

2.3.3 Add 10–15 drops of thymolphthalein indicator to the chilled solution. If the solution remains clear, add 0.1 N NaOH until the solution turns blue; then add 0.1 N HCl back to the colorless endpoint. If the solution turns blue upon adding the indicator, add 0.1 N HCl to the colorless endpoint.

2.3.4 On the analytical balance, accurately weigh the amount of resin indicated under the ''*Resin Sample Size*'' chart (see below) as follows.

RESIN SAMPLE SIZE

Approximate free HCHO	Sample weight (grams)
<0.5%	10
0.5—1.0%	5
1.0—3.0%	2
>3.0%	1

2.3.4.1 Pour about 1 inch of resin into a 5 oz. plastic cup.

2.3.4.2 Determine the gross weight of the cup, resin, and disposable pipette (with the narrow tip broken off) fitted with a small rubber bulb.

2.3.4.3 Pipette out the desired amount of resin into the stirring, chilled solution (approximately 1.5 to 2 g per pipette-full).

2.3.4.4 Quickly reweigh the cup, resin, and pipette with the bulb.

2.3.4.5 The resultant weight loss equals the grams of resin being tested.

2.3.5 Rapidly titrate the solution with 0.1 N HCl to the colorless endpoint described in Step 3 (2.3.3).

2.3.6 Repeat the test in triplicate.

2.4 Calculation.

2.4.1 The percent free-formaldehyde (%HCHO) is calculated as follows:

$$\%HCHO = \frac{(\text{mL } 0.1 \text{ N HCl})\ (\text{N of Acid})\ (3.003)}{\text{Weight of Sample}}$$

2.4.2 Compute the average percent free-formaldehyde of the three tests. *Note:* If the results of the three tests are not within a range of ±0.5 percent or if the average of the three tests does not meet expected limits, carry out Part B and then repeat Part A.

3.0 Part B—Standard Check

Part B ensures that test reagents used in determining percent free-formaldehyde in urea-formaldehyde resins are of proper concentration and that operator technique is correct. Should any doubts arise in either of these areas, the formaldehyde standard solution test should be carried out.

3.1 Preparation and Standardization of a 1 Percent Formalin Solution.

Prepare a solution containing approximately 1 percent formaldehyde from a stock 37 percent formalin solution. Standardize the prepared solution by titrating the hydroxyl ions resulting from the formation of the formaldehyde bisulfite complex.

3.2 Apparatus Required.

Note: All reagents must be American Chemical Society analytical reagent grade or better.

3.2.1 One 1-liter (L) volumetric flask (class A).
3.2.2 One 250-mL volumetric flask (class A).
3.2.3 One 250-mL beaker.
3.2.4 One 100-mL pipette (class A).
3.2.5 One 10-mL pipette (class A).
3.2.6 One 50-mL graduated cylinder (class A).
3.2.7 A pH meter, standardized using pH 7 and pH 10 buffers.
3.2.8 Magnetic stirrer.
3.2.9 Magnetic stirring bars.
3.2.10 Several 5-oz. plastic cups.
3.2.11 Disposal pippettes.
3.2.12 Ice cube trays (small cubes).

3.3 Materials Required.

3.3.1 A solution of 37 percent formalin.
3.3.2 Anhydrous Na_2SO_3.
3.3.3 Distilled water.
3.3.4 Standardized 0.100 N Hcl.
3.3.5 Thymolphthalein indicator (1.0 g thymolphthalein/199 g methanol).

3.4 Preparation of Solutions and Reagents.

3.4.1 Formaldehyde Standard Solution (approximately 1 percent). Measure, using a graduated cylinder, 27.0 mL of analytical reagent 37 percent formalin solution into a 1-L volumetric flask. Fill the flask to volume with distilled water.

Note: You must standardize this solution as described in section 3.5. This solution is stable for 3 months.

3.4.2 Sodium Sulfite Solution 1.0 M (used for standardization of Formaldehyde Standard Solution). Quantitatively transfer, using distilled water as the transfer solvent, 31.50 g of anhydrous Na_2SO_3 into a 250-mL volumetric flask. Dissolve in approximately 100 ml of distilled water and fill to volume. *Note:* You must prepare this solution daily, but the calibration of the Formaldehyde Standard Solution needs to be done only once.

3.4.3 Hydrochloric Acid Standard Solution 0.100 M. This reagent should be readily available as a primary standard that only needs to be diluted.

3.5 Standardization.

3.5.1 Standardization of Formaldehyde Standard Solution.

3.5.1.1 Pipette 100.0 mL of 1 M sodium sulfite into a stirred 250-mL beaker.

3.5.1.2 Using a standardized pH meter, measure and record the pH. The pH should be around 10. It is not essential the pH be 10; however, it is essential that the value be accurately recorded.

3.5.1.3 To the stirring Na_2SO_3 solution, pipette in 10.0 mL of Formaldehyde Standard Solution. The pH should rise sharply to about 12.

3.5.1.4 Using the pH meter as a continuous monitor, titrate the solution back to the original exact pH using 0.100 N HCl. Record the milliliters of HCl used as titrant.

Note: Approximately 30 to 35 mL of HCl will be required.

3.5.1.5 Calculate the concentration of the Formaldehyde Standard Solution using the equation as follows:

$$\%HCHO = \frac{(\text{mL HCl})\ (\text{N HCl})\ (3.003)}{\text{mL sample}}$$

3.6 *Procedure.*

3.6.1 Prepare a sufficient quantity of crushed ice for three determinations (two trays of cubes).

3.6.2 Put 70 cc of 1 M Na_2SO_3 solution into a 400-mL beaker. Begin stirring and add approximately 100 g of crushed ice and 2 g NaCl. Maintain 0 °C during the test, adding ice as necessary.

3.6.3 Add 10–15 drops of thymolphthalein indicator to the chilled solution. If the solution remains clear, add 0.1 N NaOH until the solution turns blue; then add 0.1 N HCl back to the colorless endpoint. If the solution turns blue upon adding the indicator, add 0.1 N HCl to the colorless endpoint.

3.6.4 On the analytical balance, accurately weigh a sample of Formaldehyde Standard Solution as follows.

3.6.4.1 Pour about 0.5 inches of Formaldehyde Standard Solution into a 5-oz. plastic cup.

3.6.4.2 Determine the gross weight of the cup, Formaldehyde Standard Solution, and a disposable pipette fitted with a small rubber bulb.

3.6.4.3 Pipette approximately 5 g of the Formaldehyde Standard Solution into the stirring, chilled Na_2SO_3 solution.

3.6.4.4 Quickly reweigh the cup, Formaldehyde Standard Solution, and pipette with the bulb.

3.6.4.5 The resultant weight loss equals the grams of Formaldehyde Standard Solution being tested.

3.6.5 Rapidly titrate the solution with 0.1 N HCl to the colorless endpoint in Step 3 (3.6.3).

3.6.6 Repeat the test in triplicate.

3.7 Calculation for Formaldehyde Standard Solution.

3.7.1 The percent free-formaldehyde (% HCHO) is calculated as follows:

$$\%HCHO = \frac{(\text{mL 0.1 N HCl})\ (\text{N Acid})\ (3.003)}{\text{Weight of Formaldehyde Standard Solution}}$$

3.7.2 The range of the results of three tests should be no more than ±5 percent of the actual Formaldehyde Standard Solution concentration. Report results to two decimal places.

3.8 Reference.

West Coast Adhesive Manufacturers Trade Association Test 10.1.

Appendix B to Subpart HHHH to Part 63—Method for the Determination of Loss-on-Ignition

1.0 *Purpose*

The purpose of this test is to determine the loss-on-ignition (LOI) of wet-formed fiberglass mat.

2.0 *Equipment*

2.1 Scale sensitive to 0.001 gram (g).
2.2 Drying oven equipped with a means of constant temperature regulation and mechanical air convection.
2.3 Furnace designed to heat to at least 625 °C (1,157 °F) and controllable to ±25 °C (±45 °F).
2.4 Crucible, high form, 250 milliliter (mL).
2.5 Desiccator.
2.6 Pan balance (see Note 2 in 4.9)

3.0 *Sample Collection Procedure*

3.1 Obtain a sample of mat in accordance with Technical Association of the Pulp and Paper Industry (TAPPI) method 1007 ''Sample Location.''

3.2 Use a 5-to 10-g sample cut into pieces small enough to fit into the crucible.

3.3 Place the sample in the crucible. (Note 1: To test without the use of a crucible, see Note 2 after Section 4.8.)

3.4 Condition the sample in the furnace set at 105 ± 3 °C (221 ± 9 °F) for 5 minutes ± 30 seconds.

4.0 *Procedure*

4.1 Condition each sample by drying for 5 minutes ± 30 seconds at 105 ± 3 °C (22 ± 5 °F).

4.2 Remove the test sample from the furnace and cool in the desiccator for 30 minutes in the standard atmosphere for testing glass textiles.

4.3 Place the empty crucible in the furnace at 625 ± 25 °C (1,157 ± 45 °F). After 30 minutes, remove and cool the crucible in the standard atmosphere (TAPPI method 1008) for 30 minutes.

4.4 Identify each crucible with respect to each test sample of mat.

4.5 Weigh the empty crucible to the nearest 0.001 g. Record this weight as the tare mass, T.

4.6 Place the test sample in the crucible and weigh to the nearest 0.001 g. Record this weight as the initial mass, A.

4.7 Place the test sample and crucible in the furnace and ignite at 625 ± 25 °C (1,157 ± 45 °F).

4.8 After ignition for at least 30 minutes, remove the test sample and crucible from the furnace and cool in the desiccator for 30 minutes in the standard atmosphere (TAPPI method 1008).

4.9 Remove each crucible, and test each sample separately from the desiccator, and immediately weigh each sample to the nearest 0.001 g. Record this weight as the ignited mass, B. (Note 2: When it is known that no ash residue separates from the test sample during the weighing and igniting processes, you may weigh the sample separately without the crucible. When this occurs, the tare mass (T) equals zero. With appropriate care, you can dry and weigh a single piece of mat and place with tongs into the ignition oven on appropriate refractory supports. When the ignition time is over, remove the sample as an intact fragile web and weigh it directly on a pan balance.)

5.0 *Calculation*

5.1 Calculate the LOI for each sample as follows:

$$\% \text{ LOI} = 100 \times (A - B)/(A - T)$$

Where:

A = initial mass of crucible and sample before ignition (g);

B = mass of crucible and glass residue after ignition (g); and

T = tare mass of crucible, (g) (see Note 2).

5.2 Report the percent LOI of the glass mat to the nearest 0.1 percent.

6.0 *Precision*

The repeatability of this test method for measurements on adjacent specimens from the same sample of mat is better than 1 percent.

[FR Doc. 00–12788 Filed 5–25–00; 8:45 am]

BILLING CODE 6560–50–P

Federal Register

Friday,
May 26, 2000

Part IV

Department of Agriculture

Agricultural Marketing Service

7 CFR Parts 90, 91 et al.

Changes in Fees for Science and Technology (S&T) Laboratory Service; Proposed Rule

DEPARTMENT OF AGRICULTURE

Agricultural Marketing Service

7 CFR Parts 90, 91, 92, 93, 94, and 98

[Docket Number S&T–99–008]

RIN 0581–AB91

Changes in Fees for Science and Technology (S&T) Laboratory Service

AGENCY: Agricultural Marketing Service, USDA.

ACTION: Proposed rule with request for comments.

SUMMARY: The Agricultural Marketing Service (AMS) proposes to increase the standard hourly fee rate for each laboratory analysis conducted under the AMS S&T Laboratory Program from $36.26 to $45.00. The premium laboratory rate for appeals, holiday and overtime service would be increased from $54.39 to $67.50 per analysis hour. These proposed 24.1 percent increases in hourly rates reflect the additional revenue S&T is required to collect in order to recover laboratory program expenses. AMS also proposes to change fees for laboratory testing services which are offered for agricultural food commodities to reflect actual equipment and labor expenses for performing each test. The proposed regulations include additional tests for commodity products for incorporation into existing schedules and sets an updated hourly rate of $45.00 for unlisted tests. AMS proposes to remove laboratory tests that have been found to be obsolete as well as duplicate tests performed by other Agricultural Marketing Service programs. The proposal also has name, position title, and address changes as a result of Agency restructuring that lead to the formation of the AMS Science and Technology program.

DATES: Comments must be received on or before June 15, 2000.

ADDRESSES: Comments are invited on this proposed rule. Interested persons are invited to comment on this rule by submitting such written data, views, or arguments as they may desire. Comments should be sent in triplicate to James V. Falk, Docket Manager, USDA, AMS, Science and Technology, P.O. Box 96456, Room 3521-South, Washington, DC 20090–6456; telephone (202) 690–4089; the facsimile (202) 720–4631, or e-mail: James.Falk@usda.gov and should refer to the docket title and number located in the heading of this document. Comments received will be available for public inspection in Room 3507, South Agriculture Building, 1400 Independence Avenue, SW, Washington, D.C. 20250 between the hours of 10:00 a.m. and 4:00 p.m., Eastern Time, Monday through Friday, except Federal holidays. All comments received on or before the closing date for comments will be considered. After the close of the comment period, AMS intends to publish a final rule in the **Federal Register**.

FOR FURTHER INFORMATION CONTACT: Anita J. Okrend, Technical Services Branch Chief, telephone (202) 690–4025, or e-mail: Anita.Okrend@usda.gov.

SUPPLEMENTARY INFORMATION:

A. Executive Order 12866

This proposed rule has been determined to be not significant for the purposes of Executive Order 12866, and therefore, has not been reviewed by the Office of Management and Budget (OMB).

B. Civil Justice Reform

This action has been reviewed under Executive Order 12988, Civil Justice Reform. It is not intended to have retroactive effect. This proposed rule does not preempt any State or local laws, regulation, or policies, unless they present an irreconcilable conflict with this rule. There are no administrative procedures which must be exhausted prior to any judicial challenge to this rule or the application of its provisions.

C. Regulatory Flexibility Act

Pursuant to requirements set forth in the Regulatory Flexibility Act (RFA) (5 U.S.C. 601 *et seq.*), the Administrator of the Agricultural Marketing Service (AMS) has considered the economic impact of this action on small entities.

There are 811 current users of the Science and Technology's (S&T) laboratory testing services. Such users of services include food processors, handlers, growers, government agencies, and exporters. Many of these users are small entities under the criteria established by the Small Business Administration (13 CFR 121.201). Laboratory tests for commodities are provided to all businesses on a voluntary basis and user fees are set at an hourly rate. Any decision to discontinue the use of the laboratory services and obtain new contracts with other governmental agencies or private laboratories would not hinder the food processors or industry members from marketing their products. User fee costs to entities would be proportional to their use of testing services, so that costs are shared equitably by all users.

The last fee increases for the Laboratory Program testing services became effective on May 4, 1998 (63 FR 16370–16375). Since that time, there has been both a decline in revenue and an increase in costs. This reflects a shift in usage patterns on the part of applicants for testing services and change to government programs. For example, several federal commodity purchasing programs are now relying heavily on vendor certification rather than government laboratory testing; a larger percentage of peanut aflatoxin analyses are performed by other, non-S&T laboratories; testing of tobacco samples is down; and poultry testing is decreasing due to changing importer country requirements. In addition, some companies are doing their own company and in-house analyses rather than using government laboratory testing services. Further, there has been a noticeable decrease in requested dairy product testing with the scaling back of the dairy price support program. Several streamlining actions to be completed in FY 2000 will result in cost savings. They include staff and space reductions or closing of laboratories. However, overall, costs are increasing despite these efforts. Employee salary and benefits, which account for approximately 68 percent of FY 2000 operating budget, have increased 4.8 to 5.59 percent, depending on the locality, since January 2000. For FY 1999, these increases were 3.54 to 4.02 percent, depending on locality. Rents, utilities, communications, and other overhead costs increased 5.1 percent during FY 1999. These overhead costs are projected to increase by the same percentage for FY 2000.

In fiscal year 1999, the S&T Laboratory Program obligatory costs exceeded revenues by $1,423,869 with costs at $6,419,006 and revenue at $4,995,137. There was an $807,299 decline in revenue in fiscal year 1999. For FY 2000 the S&T program expects to report a $1,562,534 deficit at the current fees because there are expected to be lower numbers of samples for analysis with all commodities at our laboratories. The S&T program projected costs and revenues for FY 2000 are $6,513,730 and $4,951,196 respectively without a fee increase.

The AMS estimates that this rule would yield $1,584,383 overall in additional laboratory testing program revenues during FY 2000. The laboratory hourly fee rate would increase by approximately 24.1 percent from $36.26, as last revised effective May 4, 1998. The new standard laboratory service fee rate would be $45.00 per hour. This fee would also apply to tests which are not listed in the fee schedules (Tables 1 through 8). The

premium laboratory rate for appeals, holiday and overtime service would be $67.50 per analysis hour or one and one half times the fees listed in Tables 1 through 8. This represents a 24.1 percent increase. The fees in Tables 1 through 8 would also be amended. Most of these would increase. Without an increase, anticipated revenue would not adequately cover increasing program costs. FY 2000 revenues for laboratory testing are expected to be $4,951,196 at the current hourly fee rates, obligatory costs are projected at $6,513,730, and trust fund balance would be $797,211, which is below necessary reserve level ($2,552,243). With the fee increase, FY 2000 revenues are projected to be $5,017,147 with obligatory costs of $6,400,480 and trust balance at $874,667. Users of S&T testing services are under no obligation to use them. However, it is necessary for AMS to recover the cost of these services. The Agricultural Marketing Act of 1946, as amended (7 U.S.C. 1621 *et seq.*) provides for the collection of reimbursable fees from users of the program services to cover, as nearly as practicable, the costs of the services rendered.

Other miscellaneous and unsubstantial changes are proposed that would not adversely affect users of the program services. Related proposed fee increases represent the minimal fee increases necessary to cover the costs of operating the services provided under the S&T program. Accordingly, the Administrator has determined that its provisions would not have a significant economic impact on a substantial number of small entities.

D. Paperwork Reduction Act

This proposed rule does not contain any new information collection or record keeping requirements that are subject to the Office of Management and Budget (OMB) approval under the Paperwork Reduction Act of 1995 (44 U.S.C. Chapter 35).

E. Background and Proposed Fees

On August 9, 1993, AMS published a rule in the **Federal Register** (58 FR 42408–42448) to combine all AMS regulations concerning laboratory services. The goal was to consolidate and to transfer existing laboratory testing programs operating independently under the various AMS commodity programs (Cotton, Poultry, Fruit and Vegetable, Tobacco, Dairy, and Livestock and Seed) to its Science and Technology (S&T) program, formerly the Science Division and the Science and Technology Division (S&TD).

All divisions in the Agricultural Marketing Service (AMS) were designated as programs by the Administrator on September 18, 1997. The prior rules included fees charged for testing and related services under the diversified S&T programs and set an hourly analytical testing rate. The current standard hourly rate of $36.26 and the premium hourly rate of $54.39 have been in effect since the April 2, 1998 rule (63 FR 16370—16375).

The S&T laboratory testing programs are mainly voluntary, user fee services, conducted under the authority of the Agricultural Marketing Act of 1946, as amended. The Act authorizes the Secretary of Agriculture to provide Federal analytical testing services that facilitate marketing and allow products to obtain grade designations or meet marketing standards. In addition, the laboratory tests establish quality standards for agricultural commodities. The Act also requires that reasonable fees be collected from the users of the services to cover as nearly as possible the costs of maintaining the programs.

In addition to raising hourly fees, there is a need to amend all general schedules and listing of fees for official laboratory test services in tables 1 through 8 in Part 91, Subpart I due to rapid changes in analytical methodologies and customer service needs. Under the present regulations the fee schedules list 200 items of laboratory services in part 91. Many additions and deletions of laboratory tests have occurred since the last rule published on April 2, 1998 (63 FR 16370—16375). The following tables 1 through 8 compare current fees and charges with proposed fees and charges for the laboratory testing of food and fiber products as found at 7 CFR 91.37:

TABLE 1.—AMENDED

Name of specific program	Type of analysis	Current fee	Proposed fee
Table 1—Single Test Laboratory Fees for Proximate Analyses.	Ammonia, Ion Selective Electrode	$81.59	$101.25
	Ash, Total	36.26	45.00
	Ash, Acid Insoluble	54.39	(2)
	Chloride, Salt Titration (Dairy)	18.13	22.50
	Fat, Acid Hydrolysis (Cheese)	36.26	45.00
	Fat Acid Hydrolysis (Mojonnier)	36.26	45.00
	Fat (Dairy Prod. Except Cheese)	18.13	22.50
	Fat (Dry Basis)	None	67.50
	Fat, Ether Extraction (Soxhlet)	36.26	45.00
	Fat (Kohman)	(1)	45.00
	Fat, Microwave-Solvent Extract	36.26	45.00
	Fiber, Crude	72.52	(2)
	Moisture, Distillation	36.26	45.00
	Moisture, Oven	18.13	22.50
	Moisture (Kohman)	(1)	11.25
	Protein, Combustion	72.52	90.00
	Protein, Kjeldahl	72.52	90.00
	Salt, Back Titration	27.20	33.75
	Salt, Potentiometric	18.13	22.50
	Salt (Rapid)	(1)	33.75
	Standard hourly rate	36.26	45.00
	Premium hourly rate	54.39	67.50

[1] None.
[2] Removed.

TABLE 2.—AMENDED

Name of specific program	Type of analysis	Current fee	Proposed fee
Table 2—Single Test Laboratory Fees for Lipid Related Analysis.	Acid Degree Value (Dairy)	$36.26	$45.00
	Acidity, Titratable	9.07	22.50
	Carotene, Spectrophotometric	90.65	(2)
	Catalase Test	18.13	(2)
	Cholesterol	90.65	(2)
	Color (Honey)	18.13	(2)
	Color, NEPA (Eggs)	36.26	(2)
	Consistency, Bostwick (Cooked)	18.13	(2)
	Consistency, Bostwick Uncooked)	18.13	(2)
	Density (Specific Gravity)	9.07	11.25
	Dispersibility (I Dry Whole Milk)	(1)	67.50
	Dispersibility (Moates-Dabbah)	18.13	22.50
	Fat Stability, AOM	36.26	45.00
	Fatty Acid Profile, AOAC–GC	145.04	180.00
	Flash Point Test only	72.52	90.00
	Free Fatty Acids	18.13	22.50
	Meltability (Process Cheese)	18.13	22.50
	Peanut Oil Analyses (Oil, Moisture, Free Fatty Acid, Ammonia, and Foreign Matter).	(1)	45.00
	Any 1 of the oilseed oil analyses	(1)	22.50
	Peroxidase Test	18.13	(2)
	Peroxide Value	27.20	33.75
	Smoke Point Test only	72.52	90.00
	Smoke Point and Flash Point	126.91	157.50
	Solids, Total (Oven Drying)	18.13	22.50
	Soluble Solids, Refractometer	18.13	22.50

[1] None.
[2] Removed.

TABLE 3.—AMENDED

Name of specific program	Type of analysis	Current fee	Proposed fee
Table 3—Single Test Laboratory Fees for Food Additive (Direct and Indirect).	Aflatoxin (Dairy, Eggs)	$126.91	(2)
	Alar or Daminozide Residue	217.56	(3)
	Amitraz Residue, GLC	217.56	$270.00
	Alcohol (Qualitative)	72.52	(3)
	Alkalinity of Ash	54.39	(3)
	Antibiotic, Qualitative (Dairy)	18.13	22.50
	Antibiotic, Quantitative	389.86	393.75
	Ascorbates (Qualitative—Meats)	18.13	22.50
	Ascorbic Acid, Titration	36.26	45.00
	Ascorbic Acid, Spectrophotometric	36.26	45.00
	Benzene, Residual	72.52	(3)
	Brix, Direct Percent Sucrose	18.13	22.50
	Brix, Dilution	18.13	22.50
	Butylated Hydroxyanisole (BHA)	54.39	67.50
	Butylated Hydroxytoluene (BHT)	54.39	67.50
	Caffeine, Micro Bailey-Andrew	54.39	67.50
	Caffeine, Spectrophotometric	36.26	78.75
	Calcium	54.39	(3)
	Citric Acid, GLC or HPLC	54.39	67.50
	Chlorinated Hydrocarbons: Pesticides and Industrial Chemicals—Initial Screen.	145.04	180.00
	Second Column Confirmation of Analyte	36.26	45.00
	Confirmation on Mass Spectrometer	72.52	90.00
	Dextrin (Qualitative)	18.13	22.50
	Dextrin (Quantitative)	108.78	135.00
	Filth, Heavy (Dairy)	90.65	112.50
	Filth, Heavy (Eggs)	145.04	180.00
	Filth, Light (Eggs)	90.65	112.50
	Filth, Light & Heavy (Eggs)	217.56	270.00
	Fines	(1)	22.50
	Flavor (Dairy)	9.07	11.25
	Flavor (Products except Dairy)	27.20	33.75
	Fumigants:		
	Initial Screen—		
	Dibromochloropropane (DBCP)	36.26	45.00
	Ethylene Dibromide	36.26	45.00

TABLE 3.—AMENDED—Continued

Name of specific program	Type of analysis	Current fee	Proposed fee
	Methyl Bromide	36.26	45.00
	Confirmation on Mass Spectrometer—Each individual fumigant residue.	72.52	90.00
	Glucose (Qualitative)	27.20	33.75
	Glucose (Quantitative)	63.46	78.75
	Glycerol (Quantitative)	108.78	135.00
	Gums	108.78	135.00
	Heavy Metal Screen	317.28	326.25
	High Sucrose Content or Avasucrol (Holland Eggs)	145.04	(3)
	Hydrogen Ion Activity, pH	18.13	(3)
	Mercury, Cold Vapor AA	90.65	135.00
	Metals (Other Than Heavy, Each Metal)	72.52	(3)
	Monosodium Dihydrogen Phosphate	145.04	180.00
	Monosodium Glutamate	145.04	180.00
	Niacin	72.52	90.00
	Nitrites (Qualitative)	18.13	(3)
	Nitrites (Quantitative)	108.78	(3)
	Ochratoxin A	(1)	67.50
	Odor	9.07	11.25
	Organic Acids (in Eggs)	(1)	180.00
	Oxygen	18.13	22.50
	Palatability and Odor:		
	First Sample	27.20	22.50
	Each Additional Sample	18.13	(3)
	Penicillin	(1)	67.50
	Phosphatase, Residual	36.26	(3)
	Phosphorus	72.52	(3)
	Propylene Glycol, Codistillation: (Qualitative)	72.52	(3)
	Pyrethrin Residue (Dairy)	145.04	180.00
	Scorched Particles	9.07	22.50
	Sodium, Potentiometric	36.26	45.00
	Sodium Benzoate, HPLC	54.39	67.50
	Sodium Lauryl Sulfate (SLS)	290.08	(3)
	Sodium Silicoaluminate (Zeolex)	72.52	90.00
	Solubility Index	18.13	11.25
	Starch (in Dry Milk)	(1)	22.50
	Starch, Direct Acid Hydrolysis	108.78	90.00
	Sugar, Polarimetric Methods	36.26	33.75
	Sugar Profile, HPLC—		
	One type sugar from profile	108.78	135.00
	Each additional type sugar	18.13	22.50
	Sugars, Non-Reducing	108.78	135.00
	Sugars, Total as Invert	72.52	(3)
	Sulfites (Qualitative)	27.20	(3)
	Sulfur Dioxide, Direct Titration	36.26	45.00
	Sulfur Dioxide, Monier-Williams	54.39	(3)
	Toluene, Residual	72.52	90.00
	Triethyl Citrate, GC (Quantitative)	36.26	(3)
	Vitamin A, Carr-Price (Dairy)	45.33	112.50
	Vitamin A, HPLC	90.65	90.00
	Vitamin B-1 (Thiamin)	72.52	90.00
	Vitamin B-2 (Riboflavin)	72.52	90.00
	Vitamin D, HPLC (Vitamins D2 & D3/Dairy)	308.21	382.50
	Whey Protein Nitrogen	27.20	33.75
	Whey Protein Nitrogen, Kjeldahl	(1)	112.50
	Xanthydrol Test for Urea	54.39	67.50
	This is an optional test to the extraneous material isolation test.		

[1] None.
[2] Redistributed.
[3] Removed.

TABLE 4.—AMENDED

Name of specific program	Type of analysis	Current fee	Proposed fee
Table 4—Single Test Laboratory Fees for Other Chemical and Physical Component Analyses	Available Carbon Dioxide (Baking Powders)	$145.04	(2)
	Capsaicin (Hot Sauce)	72.52	(2)
	Cheese (Fines)	(1)	$11.25
	Color, Apparent-Visual	9.07	11.25
	Complete Kohman Analysis-DairyExtractable Color in Spices.	36.26	45.00
		18.13	(2)
	Grape Juice Absorbancy Ratio	18.13	(2)
	Hot Water Insolubles	(1)	67.50
	Hydroxymethylfurfural (Honey)	36.26	(2)
	Jelly Strength (Bloom)	90.65	(2)
	Linolenic Acid.	72.52	90.00
	Methyl Anthranilate	36.26	(2)
	Net Weight (Per Can)	9.07	11.25
	Non-Volatile Methylene Chloride Extract	90.65	112.50
	Overrun for Whipped Topping	27.20	33.75
	Particle Size (Ether Wash)	18.13	22.50
	pH	(1)	11.25
	pH—Quinhydrone (Cheese)	18.13	22.50
	Potassium Iodide (Table Salt)	54.39	67.50
	Protein Reducing Substances	(1)	45.00
	Quinic Acid (Cranberry Juice)	63.46	78.75
	Serum Drainage for Whipped Topping	18.13	22.50
	Sieve or Particle Size	18.13	22.50
	Rate of Wetting (Nondairy Creamer)	18.13	22.50
	Reducing Sugars	72.52	90.00
	Water Activity	27.20	22.50
	Water Insoluble Inorganic Residues (WIIR)	72.52	90.00
	Yellow Onion Test	27.20	(2)

[1] None.
[2] Removed.

TABLE 5.—AMENDED

Name of specific program	Type of analysis	Current fee	Proposed fee
Table 5—Single Test Laboratory Fees for Microbiological Analyses.	Aerobic (Standard) Plate Count	$18.13	$22.50
	Anaerobic Bacterial Plate Count	27.20	33.75
	Bacillus cereus	72.52	90.00
	Bacterial Direct Microscopic Count	36.26	45.00
	Campylobacter jejuni	145.04	(2)
	Coliform Plate Count (Dairy Products)	18.13	22.50
	Coliform Plate Count, Violet Red Bile Agar (Presumptive Coliform Plate Count).	27.20	33.75
	Coliforms, Most Probable Number (MPN):		
	Step 1	27.20	33.75
	Step 2	27.20	22.50
	Direct Microscopic Clump Count	(1)	11.25
	Direct Microscopic Clump Count Greater Than 75 Million.	(1)	45.00
	E. coli, Presumptive MPN (Additional)	54.39	45.00
	E. coli (MUG)	(1)	33.75
	Enterococci Count	108.78	135.00
	Howard Mold Count	(1)	56.25
	Lactobacillus Count	45.33	56.25
	Lactic Acid Tolerant Microbes	(1)	22.50
	Listeria monocytogenes Confirmation Analysis:		
	Step 1	54.39	67.50
	Step 2	54.39	56.25
	Step 3 (Confirmation)	90.65	112.50
	Parasite Identification	145.05	180.00
	Psychrotrophic Bacterial Plate Count	27.20	45.00
	Salmonella (USDA Culture Method):		
	Step 1 (Dairy Products)	$36.26	(2)
	Step 1	54.39	$78.75
	Step 2	27.20	33.75
	Step 3 (Confirmation)	54.39	56.25
	Serological Typing (Optional)	90.65	(2)
	Salmonella Enumeration (Complete Test)	108.78	135.00
	Salmonella (Rapid Methods):		

TABLE 5.—AMENDED—Continued

Name of specific program	Type of analysis	Current fee	Proposed fee
	Step 1	72.52	78.75
	Step 2	27.20	33.75
	Step 3 (Confirmation)	54.39	56.25
	Salmonella typhi (Meat Products)	36.26	45.00
	Staphylococcus aureus, Direct Plating	(1)	67.50
	Staphylococcus aureus, MPN: With Coagulase Positive Confirmation.	63.46	78.75
	Thermoduric Bacterial Plate Count	27.20	33.75
	Yeast and Mold Count	18.13	22.50
	Yeast and Mold Differential Confirmation	(1)	22.50
	Yeast and Mold Differential Plate Count	27.20	33.75
	Yeast or Mold Confirmation	(1)	22.50

[1] None.
[2] Removed.

TABLE 6.—[AMENDED] LABORATORY FEES FOR AFLATOXIN ANALYSES

Aflatoxin test by commodity	Current fee per single analysis	Current fee per pair analyses	Proposed fee per single analysis	Proposed fee per pair analyses [1]
Peanut Butter (TLC–CB, HPLC, Affinity Column) Affinity Column)	$36.26	(3)	$45.00	(3)
Corn (TLC–CB, HPLC, Affinity Column)	36.26	(3)	45.00	(3)
Roasted Peanuts (TLC–BF)	36.26	(3)	45.00	(3)
Brazil Nuts (TLC–BF)	72.52	(3)	90.00	(3)
Pistachio Nuts (TLC–BF, HPLC)	72.52	(3)	90.00	(3)
Shelled Peanuts (TLC , Affinity Column)	17.00	$34.00	45.00	$38.00
Shelled Peanuts (HPLC)	31.00	62.00	45.00	70.00
Tree Nuts (TLC)	36.26	(3)	45.00	(3)
Oilseed Meals (TLC, HPLC, Affinity Column)	36.26	(3)	45.00	(3)
Edible Seeds (TLC)	36.26	(3)	45.00	(3)
Dried Fruit (TLC)	36.26	(3)	45.00	(3)
Small Grains (TLC)	36.26	(3)	45.00	(3)
In-Shell Peanuts (TLC, Affinity Column)	17.00	34.00	45.00	38.00
In-Shell Peanuts (HPLC)	(2)	(2)	45.00	70.00
Silage; Other Grains (TLC)	36.26	(3)	45.00	(3)
Submitted Samples (TLC, HPLC, Affinity Column)	36.26	(3)	45.00	(3)
Aflatoxin (Dairy, Eggs)	126.91	(2)	157.50	(3)

[1] Aflatoxin testing of raw peanuts under Peanut Marketing Agreement for subsamples 1–AB, 2–AB, 3–AB, and 1–CD for single or pair of analyses is $19.00 or $38.00, respectively using Thin-Layer Chromatography (TLC) and Best Foods (BF) extraction or immunoaffinity column assay with fluorometric quantitation. The BF method has been modified to incorporate a water slurry extraction procedure. The Contaminants Branch (CB) method is used on occasion as an alternative method for peanuts and peanut meal when doubt exists as to the effectiveness of the Best Foods method in extracting aflatoxin from the sample or when background interferences exist that might mask TLC quantitation of aflatoxin. The cost per single or pair of analyses using High Pressure Liquid Chromatography (HPLC) is $35.00 and $70.00, respectively. Other aflatoxin analyses for fruits and vegetables are listed at Science and Technology's current hourly rate of $45.00.
[2] None.
[3] NA=Not Applicable.

TABLE 7.—MISCELLANEOUS CHARGES SUPPLEMENTAL—TO SCIENCE AND TECHNOLOGY'S LABORATORY TEST FEES

Laboratory service description	Current list fee	Proposed list fee
Sample Grinding by Vertical Cutter Mixer (VCM).	$18.13	$22.50.
Sample Grinding Canned Boned Poultry	36.26	11.25 per can.
Sample Grinding by Dickens Hammer Mill	None	11.25.
Sample Grinding (Meats, Meat Products, Meals, Ready-to-Eat):		
Per pouch or raw sample	9.07	11.25.
Per tray pack	18.13	22.50.
Compositing Multiple Subsamples for an Individual Test Sample—Unit per Subsample.	9.07	Varies—Preparation fee based on $45.00 per hour.

TABLE 8.—ADDITIONAL CHARGES APPLICABLE TO SAMPLE RECEIPT AND ANALYSIS REPORT

Service description	Current list charge	Proposed list charge
Established Courier Expense at Albany, Georgia S&T Laboratory.	$2.15	Removed.

TABLE 8.—ADDITIONAL CHARGES APPLICABLE TO SAMPLE RECEIPT AND ANALYSIS REPORT—Continued

Service description	Current list charge	Proposed list charge
Courier Expense at Other AMS Laboratories: Mileage Charge Set at $0.325 Per Mile Round Trip from Laboratory to Delivery Site..	Varies	Varies (based on total mileage).
Facsimile Charge (Per Analysis Report)	$3.20 minimum up to first 3 pages, then $1.10 per page.	$3.20 minimum up to first 3 pages, then $1.50 per page.
Additional Analysis Report or Extra Certificate (½ hour charge minimum).	$18.13 per report or certificate reissued	$22.50 per report or certificate issued.

Currently, there are 200 tests or laboratory services in the current fee schedules in Tables 1 through 8 of Part 91 of the regulations. This proposed rule recommends removing 41 laboratory tests or services which have been found to be obsolete or which duplicate tests performed by other Agricultural Marketing Service programs. The proposed rule adds 28 new analytical tests that are frequently requested by many of Science and Technology's 811 customers. The customers for our laboratory services would benefit with the increased convenience of choosing newer and perhaps less costly analytical methods for determining a particular analyte in a commodity product. Once this rule becomes effective, there would be 187 laboratory test and service descriptions with scheduled fees in tables 1 through 8 of part 91 of the regulations. The majority of the fees have increased by 24.1 percent. However, 11 fees have increased by a greater percentage and 8 fees have been lowered. Although the fees set for the various tests are based on the hourly fee, it is necessary to consider other factors when setting fees for some of the tests. For example, the large increase in proposed fees for some laboratory tests is due to the additional need to recover the large increase in costs for specialized chemicals or microbiological media and other materials for performing these tests. Therefore, the titratable acidity and the scorched particles analyses would increase from $9.07 to $22.50, and the Carr-Price vitamin A (Dairy) test would increase from $45.33 to $112.50. For the same reason, S&T is proposing to increase the cost of performing step 1 for the Salmonella (USDA culture method) to $78.75 from $54.39 and the fee for performing the psychrotrophic bacterial plate count would change from $27.20 to $45.00.

The general 24.1 percent increase in user fees for laboratory services are intended to cover all of the costs associated with S&T Laboratory Program. In fee tables 1 through 8 in 7 CFR part 91, S&T is proposing to increase the fees for the quantitative antibiotic, the heavy metal screen, the step 1 *Listeria monocytogenes* analysis, the step 3 or confirmation *Salmonella* analysis (both the USDA culture and rapid methods), and the step 1 *Salmonella* analysis (rapid method) by 1, 2.8, 3.4, 3.4 (both), and 8.6 percent respectively. In addition, certain laboratory fees are proposed to be lowered by 17.3 percent. These are the palatability and odor test, the direct acid hydrolysis starch test, the water activity test, the step 2 MPN coliforms test, and the MPN presumptive *E. coli* test. S&T is also proposing to lower the fees for the solubility index, the sugar polarimetric methods, and the HPLC vitamin A analysis by 37.9, 6.9, and 0.7 percent respectively.

In its analysis of projected costs for fiscal years 1999 and 2000, AMS has identified increases in the costs of providing laboratory testing services despite declining revenues. In fiscal year 1999, the S&T Laboratory Program obligatory costs exceeded revenues by $1,423,869 with costs at $6,419,006 and revenue at $4,995,137. There was an $807,299 decline in revenue in fiscal year 1999. For FY 2000 the S&T program expects to report a $1,562,534 deficit at the current fees because there are expected to be lower numbers of samples for analysis with all commodities at our laboratories. The S&T program projected costs and revenues for FY 2000 are $6,513,730 and $4,951,196 respectively without a fee increase. The corresponding decrease in revenue with lower numbers of samples are attributable mainly to a shift in usage patterns on the part of applicants for testing services and change to government programs. For example, several federal commodity purchasing programs are now relying heavily on vendor certification rather than government laboratory testing; a larger percentage of peanut aflatoxin analyses are performed by Peanut Administrative (PAC) approved private laboratories; testing of tobacco samples is down; and poultry testing is decreasing due to changing importer country requirements. In addition, some companies are doing their own company analyses rather than using government laboratory testing services. Further, there has been a noticeable decrease in requested dairy product testing as a result of an ongoing phase out of the dairy price support program. Several streamlining actions to be completed in FY 2000 will result in cost savings. They include staff and space reductions or closing of laboratories. For example, S&T has voluntarily closed aflatoxin testing facilities at Dothan, Alabama and Ashburn, Georgia that are currently listed in 7 CFR part 91. Overall, costs are increasing despite these efforts. Employee salary and benefits, which account for approximately 68 percent of FY 2000 operating budget, have increased 4.8 to 5.59 percent, depending on the locality, since January 2000. For FY 1999, these increases were 3.54 to 4.02 percent, depending on locality. Rents, utilities, communications, and other overhead costs increased 5.1 percent during FY 1999. These overhead costs are projected to increase by the same percentage for FY 2000.

The AMS estimates that this rule would yield $1,584,383 overall in additional laboratory testing program revenues during FY 2000. The laboratory hourly fee rate would increase by approximately 24.1 percent from $36.26, as last revised effective May 4, 1998 (63 FR 16370). The new standard laboratory service fee rate would be $45.00 per hour. This fee would also apply to tests which are not listed in the fee schedules (Tables 1 through 8). The premium laboratory rate for appeals, holiday and overtime service would be $67.50 per analysis hour or one and one half times the fees listed in Tables 1 through 8. This represents an approximate 24.1 percent increase. The fees in Tables 1 through 8 would also be amended. Most of these would increase. Without an increase, anticipated revenue would not adequately cover increasing program costs. FY 2000 revenues for laboratory testing are expected to be $4,951,196 at the current hourly fee rates, obligatory costs are projected at $6,513,730, and trust fund balances would be $797,211,

which is below necessary reserve level ($2,552,243). With the fee increase, FY 2000 revenues are projected to be $5,017,147 with obligatory costs of $6,400,480 and trust balance at $874,667. Users of S&T testing services are under no obligation to use them. However, it is necessary for AMS to recover the cost of these services. The Agricultural Marketing Act of 1946, as amended (7 U.S.C. 1621 *et seq.*) provides for the collection of reimbursable fees from users of the program services to cover, as nearly as practicable, the costs of the services rendered.

All divisions in the Agricultural Marketing Service (AMS) were designated as programs by the Administrator on September 18, 1997. Hence, this proposal also has name, position title, address corrections, and other changes which are administrative in nature as a result of these Agency restructuring efforts. The term ''Science and Technology Division'' would be changed to ''Science and Technology.'' The term ''Director'' would be replaced by the term ''Deputy Administrator.'' Section 91.5 would list new addresses for the Science and Technology regional laboratories, headquarters offices, the Information Technology (IT) office, the Statistical Branch office, and the offices for residue programs. The name ''Residue Branch'' in section 91.5 would be more appropriately named ''Pesticide Data Branch.'' In section 91.9, the Technical Service Branch Chief would replace the defunct Laboratory Operations Coordination Staff Chief position. In sections 91.23, 93.13, 94.4 and 98.4, the analytical method references would have updated addresses. Section 91.37 would list a world wide web (www) site (*http://ams.usda.gov/science*) in which to obtain updated schedules of the laboratory testing fees. In section 91.37, a new fee ($11.25) in table 7 for sample grinding by Dickens hammer mill would be listed.. In table 8 of section 91.37, a revised facsimile charge ($1.50) for an additional page would be listed. In section 91.40, the established courier expense at the S&T peanut aflatoxin laboratory in Albany, Georgia would be removed.

This proposed rule provides for a 20-day comment period. This period is deemed appropriate in view of the need to make changes to the fees as soon as possible, in order to cover the necessary and ongoing expenditures of the S&T Laboratory Program. All comments which are received during the comment period will be considered before this rule is finalized.

List of Subjects

7 CFR Part 90

Agricultural commodities, Laboratories, Reporting and recordkeeping requirements.

7 CFR Part 91

Administrative practice and procedure, Agricultural commodities, Laboratories, Reporting and recordkeeping requirements.

7 CFR Part 92

Agricultural commodities, Laboratories, Pesticides and pests, Tobacco.

7 CFR Part 93

Agricultural commodities, Citrus fruits, Fruit juices, Fruits, Laboratories, Nuts, Vegetables.

7 CFR Part 94

Agricultural commodities, Eggs, Laboratories, Poultry.

7 CFR Part 98

Agricultural commodities, Laboratories, Meat and Meat products.

For the reasons set forth in the preamble, the Agricultural Marketing Service proposes to amend Title 7, chapter I, subchapter E, of the Code of Federal Regulations as follows:

PART 90—[AMENDED]

1. The authority citation for part 90 continues to read as follows:

Authority: 7 U.S.C. 1622, 1624.

§ 90.1 [Amended]

2. In § 90.1, the words ''Science and Technology Division'' are revised to read ''Science and Technology'', the words ''Science and Technology Division's'' are revised to read ''Science and Technology's'', and the word ''S&TD'' is revised to read ''S&T'' everywhere they appear.

§ 90.2 [Amended]

3. In § 90.2, the definitions of ''Director,'' ''Division'' and ''Laboratories'' are removed and new definitions of ''Deputy Administrator'', ''Laboratories'', and ''Program'' are added in alphabetical order read as follows:

§ 90.2 General terms defined.

* * * * *

Deputy Administrator. The Deputy Administrator of the Science and Technology program of the Agricultural Marketing Service agency, or any officer or employee of this agency to whom authority has heretofore been delegated, or to whom authority may hereafter be delegated, to act.

Laboratories. Science and Technology laboratories performing the official analyses described in this subchapter.

Program. The Science and Technology (S&T) program of the Agricultural Marketing Service (AMS) which performs official analytical testing services, issues licenses for cottonseed chemists, and conducts quality assurance reviews and grants accreditation or certification for commodity testing programs of laboratories.

* * * * *

§ 90.3 [Amended]

4. In § 90.3, the words ''Science and Technology Division'' are revised to read ''Science and Technology''.

§ 90.101 [Amended]

5. In § 90.101, the words ''Science and Technology Division'' are revised to read ''Science and Technology''.

§ 90.102 [Amended]

6. In § 90.102, the word ''Director'' is revised to read ''Deputy Administrator''.

PART 91—[AMENDED]

7. The authority citation for part 91 continues to read as follows:

Authority: 7 U.S.C. 1622, 1624.

§ 91.1 [Amended]

8. In § 91.1, the words ''Science and Technology Division'' are revised to read ''Science and Technology''.

9. In § 91.2, the definition for ''Applicant'' is revised and the definition for ''Agency'' is added to read as follows:

§ 91.2 Definitions.

* * * * *

Agency. The Agricultural Marketing Service agency of the United States Department of Agriculture.

* * * * *

Applicant. Any person or organization requesting services provided by the Science and Technology (S&T) programs.

* * * * *

§ 91.3 [Amended]

10. In § 91.3, the words ''Division Director'' are revised to read ''Deputy Administrator''.

11. Section 91.4 is revised to read as follows:

§ 91.4 Kinds of services.

(a) *Analytical tests.* Analytical laboratory testing services under the regulations in this subchapter consist of microbiological, chemical, and certain

other analyses, requested by the applicant and performed on tobacco, seed, dairy, egg, fruit and vegetable, meat and poultry products, and related processed products. Analyses are performed to determine if products meet Federal specifications or specifications defined in purchase contracts and cooperative agreements. Laboratory analyses are also performed on egg products as part of the mandatory Egg Products Inspection Program under the management of USDA's Food Safety and Inspection Service (FSIS) as detailed in 9 CFR 590.580.

(b) *Examination and licensure.* The manager of the Science and Technology's Cottonseed Chemist Licensing Program administers examinations and licenses chemists to certify the official grade of cottonseed.

(c) *Quality assurance reviews.* The Science and Technology representative performs on-site laboratory quality assurance reviews (both required and voluntary) to ensure that appropriate technical methods, equipment maintenance, and quality control procedures are being observed.

(d) *Consultation.* Technical advice, statistical science consultation, and quality assurance program assistance are provided by the representatives for the Science and Technology programs for domestic and foreign laboratories.

12. Section 91.5 is revised to read as follows:

§ 91.5 Where services are offered.

(a) Services are offered to applicants at the Science and Technology laboratories and facilities in the following list.

(1) *Science and Technology regional laboratories.* A variety of tests and laboratory analyses are available in two regional multi-disciplinary Science and Technology (S&T) laboratories, and are located as follows:

(i) USDA, AMS, S&T, Midwestern Laboratory, 3570 North Avondale Avenue, Chicago, IL 60618–5391.

(ii) USDA, AMS, S&T, Eastern Laboratory (Microbiology), 2311–B Aberdeen Boulevard, Gastonia, NC 28054.

(iii) USDA, AMS, S&T, Eastern Laboratory (Chemistry), 645 Cox Road, Gastonia, NC 28054.

(2) *Science and Technology (S&T) aflatoxin laboratories.* The specialty laboratories performing aflatoxin testing on peanuts, peanut products, dried fruits, grains, edible seeds, tree nuts, shelled corn products, oilseed products and other commodities are located as follows:

(i) USDA, AMS, S&T, 1211 Schley Avenue, Albany, GA 31707.

(ii) USDA, AMS, S&T, c/o Golden Peanut Company, Mail: P.O. Box 279, 301 West Pearl Street, Aulander, NC 27805.

(iii) USDA, AMS, S&T, 610 North Main Street, Blakely, GA 31723.

(iv) USDA, AMS, S&T, 107 South Fourth Street, Madill, OK 73446.

(v) USDA, AMS, S&T, c/o Cargill Peanut Products, Mail: P.O. Box 272, 715 North Main Street, Dawson, GA 31742–0272.

(vi) USDA, AMS, S&T, Mail: P.O. Box 1130, 308 Culloden Street, Suffolk, VA 23434.

(3) *Citrus laboratory.* The Science and Technology's citrus laboratory specializes in testing citrus juices and other citrus products and is located as follows: USDA, AMS, S&T Eastern Laboratory (Citrus), 98 Third Street, S.W., Winter Haven, FL 33880.

(4) *Program laboratories.* Laboratory services are available in all areas covered by cooperative agreements providing for this laboratory work and entered on behalf of the Department with cooperating Federal or State laboratory agencies pursuant to authority contained in Act(s) of Congress. Also, services may be provided in other areas not covered by a cooperative agreement if the Administrator determines that it is possible to provide such laboratory services.

(5) *Other alternative laboratories.* Laboratory analyses may be conducted at alternative Science and Technology laboratories and can be reached from any commodity market in which a laboratory facility is located to the extent laboratory personnel are available.

(6) *The Plant Variety Protection (PVP) Office.* The PVP office and plant examination facility of the Science and Technology programs issues certificates of protection to developers of novel varieties of plants which reproduce sexually. The PVP office is located as follows: USDA, AMS, Science & Technology, Plant Variety Protection Office, National Agricultural Library Building, Room 500, 10301 Baltimore Boulevard, Beltsville, MD 20705–2351.

(7) *Science and Technology headquarters offices.* The examination, licensure, quality assurance reviews, laboratory accreditation/certification and consultation services are provided by headquarters staff located in Washington, DC. The main headquarters office is located as follows: USDA, AMS, Science and Technology, Office of the Deputy Administrator, Room 3507 South Agriculture Bldg., Mail Stop 0222, 1400 Independence Ave., SW., Washington, DC 20250.

(8) *The Information Technology (IT) Office.* The IT office of the Science and Technology programs is headed by AMS's Chief Information Officer (CIO) and provides information technology services and management systems to the Agency and other agencies within the USDA. The main IT office is located as follows: USDA, AMS, Science and Technology, Office of the Chief Information Officer, 1752 South Agriculture Bldg., 1400 Independence Ave., SW., Washington, DC 20250.

(9) *Statistical Branch office.* The Statistical Branch office of Science and Technology (S&T) provides statistical services to the Agency and other agencies within the USDA. In addition, the Statistical Branch office devices sample plans and performs consulting services for research studies in joint efforts with or in a leading role with other program areas of AMS or of the USDA. The main Statistical Branch office is located as follows: USDA, AMS, S&T Statistical Branch, 0611 South Agriculture Bldg., 1400 Independence Ave., SW., Washington, DC 20250.

(10) *Offices for Pesticide Residue Programs.* Services afforded by the Federal Pesticide Record Keeping Program for restricted-use pesticides by certified applicators and services afforded by the Pesticide Data Program (PDP) are provided by offices located as follows:

(i) USDA, AMS, Science and Technology, Pesticide Data Branch, 8700 Centreville Road, Suite 200, Manassas, VA 20110–8411.

(ii) USDA, AMS, Science and Technology, Pesticide Records Branch, 8700 Centreville Road, Suite 202, Manassas, VA 20110–8411.

(iii) USDA, AMS, Science and Technology, Office of Associate Deputy Administrator, Room 3522 South Agriculture Bldg., 1400 Independence Ave., SW., Washington, DC 20250.

(b) The addresses of the various laboratories and offices appear in the pertinent parts of this subchapter. A prospective applicant may obtain a current listing of addresses and telephone numbers of Science and Technology laboratories, offices, and facilities by addressing an inquiry to the Administrative Officer, Science and Technology, Agricultural Marketing Service, United States Department of Agriculture (USDA), P.O. Box 96456, Room 0727 South Building, Mail Stop 0271, Washington, DC 20090–6456.

§ 91.6 [Amended]

13. In § 91.6, paragraph (a), the words ''Science and Technology Division'' are

revised to read ''Science and Technology''.

14. Section 91.9 is revised to read as follows:

§ 91.9 How to make an application.

(a) *Voluntary.* An application for analysis and testing may be made by contacting the director or supervisor of the Science and Technology laboratory where the service is provided, or by contacting the Technical Services Branch Chief at Science and Technology Headquarters, Washington, DC. A list of the Science and Technology laboratories is included in § 91.5.

(b) *Mandatory.* In the case of mandatory analyses, such as those required to be performed on eggs and egg products, application for services may be submitted to the office or USDA agency which administers the program, or by contacting an inspector or grader who is involved with the program.

15. Section 91.23 is revised to read as follows:

§ 91.23 Analytical methods.

Most analyses are performed according to approved procedures described in manuals of standardized methodology. These standard methods are the specific methods used. Alternatively, equivalent methods prescribed in cooperative agreements are used. The manuals of standard methods most often used by the Science and Technology laboratories are listed as follows:

(a) Approved Methods of the American Association of Cereal Chemists (AACC), American Association of Cereal Chemists/Eagan Press, 3340 Pilot Knob Road, St. Paul, Minnesota 55121–2097.

(b) ASTA's Analytical Methods Manual, American Spice Trade Association (ASTA), 560 Sylvan Avenue, P.O. Box 1267, Englewood Cliffs, New Jersey 07632.

(c) Compendium Methods for the Microbiological Examination of Foods, Carl Vanderzant and Don Splittstoesser (Editors), American Public Health Association, 1015 Fifteenth Street, NW, Washington, DC 20005.

(d) Edwards, P.R. and W.H. Ewing, Edwards and Ewing's Identification of Enterobacteriaceae, Elsevier Science, Inc., Regional Sales Office, 655 Avenue of the Americas, P.O. Box 945, New York, NY 10159–0945.

(e) FDA Bacteriological Analytical Manual (BAM), AOAC INTERNATIONAL, 481 North Frederick Avenue, Suite 500, Gaithersburg, MD 20877–2417.

(f) Manual of Analytical Methods for the Analysis of Pesticide Residues in Human and Environmental Samples, EPA 600/9–80–038, U.S. Environmental Protection Agency (EPA) Chemical Exposure Research Branch, EPA Office of Research and Development (ORD), 26 West Martin Luther King Drive, Cincinnati, Ohio 45268.

(g) Official Methods and Recommended Practices of the American Oil Chemists' Society (AOCS), American Oil Chemists' Society, P.O. Box 3489, 2211 West Bradley Avenue, Champaign, Illinois 61821–1827.

(h) Official Methods of Analysis of AOAC INTERNATIONAL, Volumes I & II, AOAC INTERNATIONAL, 481 North Frederick Avenue, Suite 500, Gaithersburg, MD 20877–2417.

(i) Standard Analytical Methods of the Member Companies of Corn Industries Research Foundation, Corn Refiners Association (CRA), 1701 Pennsylvania Avenue, NW, Washington, DC 20006.

(j) Standard Methods for the Examination of Dairy Products, American Public Health Association, 1015 Fifteenth Street, NW, Washington, DC 20005.

(k) Standard Methods for the Examination of Water and Wastewater, American Public Health Association (APHA), the American Water Works Association (AWWA) and the Water Pollution Control Federation, AWWA Bookstore, 6666 West Quincy Avenue, Denver, CO 80235.

(l) Test Methods for Evaluating Solid Waste Physical/Chemical Methods, Environmental Protection Agency, Office of Solid Waste, SW–846 Integrated Manual (available from National Technical Information Service (NTIS), U.S. Department of Commerce, 5285 Port Royal Road, Springfield, VA 22161).

(m) U.S. Army Natick Research, Development and Engineering Center's Military Specifications, approved analytical test methods noted therein, Code NPP–9, Department of Defense Single Stock Point (DODSSP) for Military Specifications, Standards, Building 4/D, 700 Robbins Avenue, Philadelphia, PA 19111–5094.

(n) U.S. Food and Drug Administration, Pesticide Analytical Manuals (PAM), Volumes I and II, Food and Drug Administration, Center for Food Safety and Applied Nutrition (CFSAN), 200 C Street, SW, Washington, DC 20204 (available from National Technical Information Service (NTIS), U.S. Department of Commerce, 5285 Port Royal Road, Springfield, VA 22161).

16. Section 91.24 is revised to read as follows:

§ 91.24 Reports of test results.

(a) Results of analyses are provided, in writing, by facsimile, by e-mail or other electronic means to the applicant.

(b) Applicants may call the appropriate Science and Technology laboratory for interim or final results prior to issuance of the formal report. The advance results may be telegraphed, e-mailed, telephoned, or sent by facsimile to the applicant. Any additional expense for advance information shall be borne by the requesting party.

(c) A letter report in lieu of an official certificate of analysis may be issued by a laboratory representative when such action appears to be more suitable than a certificate: *Provided*, that, issuance of such report is approved by the Deputy Administrator.

§ 91.25 [Amended]

17. In § 91.25, the words ''Division Director'' are revised to read ''Deputy Administrator''.

§ 91.26 [Amended]

18. In § 91.26, the words ''Division Director'' are revised to read ''Deputy Administrator'', and the word ''Division'' is revised to read ''Science and Technology Program'' everywhere they appear.

§ 91.31 [Amended]

19. In § 91.31, the words ''Division Director'' are revised to read ''Deputy Administrator''.

20. Section 91.32 is revised to read as follows:

§ 91.32 Where to file for an appeal of a laboratory service and information required.

(c) Application for an appeal of a laboratory service may be filed with the supervisor in the office or the director of the laboratory facility that issued the certificate or laboratory report on which the appeal analysis covering the commodity product is requested.

(b) The application for an appeal of a laboratory service shall state the location of the lot of the commodity product and the reasons for the appeal; and date and serial number of the certificate covering the laboratory service of the commodity product on which the appeal is requested. In addition, such application shall be accompanied by the original and all available copies of the certificate or laboratory report.

(c) Application for an appeal of a laboratory service may be made orally (in person or by telephone), in writing, by e-mail, by facsimile, or by telegraph. If made orally, written confirmation shall be made promptly.

21. In part 91, subpart I §§ 91.37 through 91.40 are revised to read as follows:

§ 91.37 Standard hourly fee rate for laboratory testing, analysis, and other services.

(a) The standard hourly fee rate in this section for the individual laboratory analyses cover the costs of Science and Technology laboratory services, including issuance of certificates and personnel and overhead costs other than the commodity inspection fees referred to in 7 CFR 52.42 through 52.46, 52.48 through 52.51, 55.510 through 55.530, 55.560 through 55.570, 58.38 through 58.43, 58.45 through 58.46, 70.71 through 70.72, and 70.75 through 70.78. The hourly fee rates in this part 91 apply to all processed commodity products, except flue-cured and burley tobacco, and exclude aflatoxin analyses, citrus juices and certain citrus products. The printed updated schedules of the laboratory testing fees for processed fruits and vegetables (7 CFR part 93), poultry and egg products (7 CFR part 94), and meat and meat products (7 CFR part 98) will be available for distribution by the individual Laboratory Directors of Science and Technology laboratories listed in § 91.5. The updated schedules of the laboratory testing fees are also available for electronic access on the world wide web (www) site at: *http://ams.usda.gov/science.* The fees for chemical analysis of cottonseed associated with grading and novel variety seed certification under the Plant Variety Protection Act are specified in 7 CFR parts 96 and 97, respectively. Except as otherwise provided in this section, charges will be made for laboratory analysis at the standard hourly rate of $45.00 for the time required to perform the service. A minimum charge of one-quarter hour at $11.25 will be made for service pursuant to each request or certificate issued.

(b) When a laboratory test service is provided for AMS by a commercial or State government laboratory, the applicant will be assessed a fee which covers the costs to the Science and Technology program for the service provided.

When Science and Technology staff provides applied and developmental research and training activities for microbiological, physical and chemical analyses on agricultural commodities the applicant will be charged a fee on a reimbursable cost basis.

General Schedules of Fees for Official Laboratory Test Services Performed at the AMS Science and Technology Laboratories for Processed Commodity Products

TABLE 1.—SINGLE TEST LABORATORY FEES FOR PROXIMATE ANALYSES

Type of analysis	List fee
Ammonia, Ion Selective Electrode	$101.25
Ash, Total	45.00
Chloride, Salt Titration (Dairy)	22.50
Fat, Acid Hydrolysis (Cheese)	45.00
Fat, Acid Hydrolysis (Mojonnier)	45.00
Fat (Dairy Products except Cheese)	22.50
Fat (Dry Basis)	67.50
Fat, Ether Extraction (Soxhlet)	45.00
Fat (Kohman Analysis)	45.00
Fat, Microwave—Solvent Extraction	45.00
Moisture, Distillation	45.00

TABLE 1.—SINGLE TEST LABORATORY FEES FOR PROXIMATE ANALYSES—Continued

Type of analysis	List fee
Moisture, Oven	22.50
Moisture (Kohman Analysis)	11.25
Protein, Combustion	90.00
Protein, Kjeldahl	90.00
Salt, Back Titration	33.75
Salt, Potentiometric	22.50
Salt, (Rapid)	33.75

TABLE 2.—SINGLE TEST LABORATORY FEES FOR LIPID RELATED ANALYSES

Type of analysis	List fee
Acid Degree Value (Dairy)	$45.00
Acidity, Titratable	22.50
Density (Specific Gravity)	11.25
Dispersibility (Instant Dry Whole Milk)	67.50
Dispersibility (Moates-Dabbah Method)	22.50
Fat Stability,[1] AOM	45.00
Fatty Acid Profile (AOAC–GC method)	180.00
Flash Point Test only	90.00
Free Fatty Acids	22.50
Meltability (Process Cheese)	22.50
Peanut Oil Analyses (Oil, Moisture, Free Fatty Acids, Ammonia, and Foreign Matter)	45.00
Any One of the Oilseed Oil Analyses	22.50
Peroxide Value	33.75
Smoke Point Test only	90.00
Smoke Point and Flash Point	157.50
Solids, Total (Oven Drying)	22.50
Soluble Solids, Refractometer	22.50

[1] Peroxide value analysis is required as a prerequisite to the fat stability test at the additional fee.

TABLE 3.—SINGLE TEST LABORATORY FEES FOR FOOD ADDITIVES (DIRECT AND INDIRECT)

Type of analysis	List fee
Amitraz Residue, GLC	$270.00
Antibiotic, Qualitative (Dairy)	22.50
Antibiotic, Quantitative [1]	393.75
Ascorbates (Qualitative—Meats)	22.50
Ascorbic Acid, Titration	45.00
Ascorbic Acid, Spectrophotometric	45.00
Brix, Direct Percent Sucrose	22.50
Brix, Dilution	22.50
Butylated Hydroxyanisole (BHA)	67.50
Butylated Hydroxytoluene (BHT)	67.50
Caffeine, Micro Bailey-Andrew	67.50
Caffeine, Spectrophotometric	78.75
Citric Acid, GLC or HPLC	67.50
Chlorinated Hydrocarbons:	
Pesticides and Industrial Chemicals—	
Initial Screen	180.00
Second Column Confirmation of Analyte	45.00
Confirmation on Mass Spectrometer (Per Residue)	90.00
Dextrin (Qualitative)	22.50
Dextrin (Quantitative)	135.00
Filth, Heavy (Dairy)	112.50
Filth, Heavy (Eggs)	180.00
Filth, Light (Eggs)	112.50

TABLE 3.—SINGLE TEST LABORATORY FEES FOR FOOD ADDITIVES (DIRECT AND INDIRECT)—Continued

Type of analysis	List fee
Filth, Light & Heavy (Eggs Extraneous)	270.00
Fines	22.50
Flavor (Dairy)	11.25
Flavor (Products except Dairy)	33.75
Fumigants:	
Initial Screen—	
Dibromochloropropane (DBCP)	45.00
Ethylene Dibromide	45.00
Methyl Bromide	45.00
Confirmation on Mass Spectrometer—	
Each individual fumigant residue	90.00
Glucose (Qualitative)	33.75
Glucose (Quantitative)	78.75
Glycerol (Quantitative)	135.00
Gums	135.00
Heavy Metal Screen [2]	326.25
Mercury, Cold Vapor AA	135.00
Monosodium Dihydrogen Phosphate	180.00
Monosodium Glutamate	180.00
Niacin	90.00
Ochratoxin A	67.50
Odor	11.25
Organic Acids (in Eggs)	180.00
Oxygen	22.50
Palatability and Odor:	
Each Sample	22.50
Penicillin	67.50
Pyrethrin Residue (Dairy)	180.00
Scorched Particles	22.50
Sodium, Potentiometric	45.00
Sodium Benzoate, HPLC	67.50
Sodium Lauryl Sulfate (SLS)	360.00
Sodium Silicoaluminate (Zeolex)	90.00
Solubility Index	11.25
Starch, Direct Acid Hydrolysis	90.00
Starch (in Dry Milk)	22.50
Sugar, Polarimetric Methods	33.75
Sugar Profile, HPLC [3].	
One type sugar from HPLC profile	135.00
Each additional type sugar	22.50
Sugars, Non-Reducing	135.00
Sulfur Dioxide, Direct Titration	45.00
Toluene, Residual	90.00
Vitamin A, Carr-Price (Dairy)	112.50
Vitamin A, HPLC	90.00
Vitamin B–1 (Thiamin)	90.00
Vitamin B–2 (Riboflavin)	90.00
Vitamin D, HPLC (Vitamins D_2 and D_3), Dairy	382.50
Whey Protein Nitrogen	33.75
Whey Protein Nitrogen, Kjeldahl	112.50
Xanthydrol Test For Urea	67.50
This is an optional test to the extraneous materials isolation test.	

[1] Antibiotic testing includes tests for chlorotetracycline, oxytetracycline, and tetracycline.
[2] Heavy metal screen includes tests for cadmium, lead, and mercury.
[3] This profile includes the following components: Dextrose, Fructose, Lactose, Maltose and Sucrose.

TABLE 4.—SINGLE TEST LABORATORY FEES FOR OTHER CHEMICAL AND PHYSICAL COMPONENT ANALYSES

Type of analysis	List fee
Cheese (Fines)	$11.25
Color, Apparent—Visual	11.25
Complete Kohman Analysis (Dairy)	45.00
Hot Water Insolubles	67.50
Linolenic Acid	90.00
Net Weight (Per Can)	11.25
Non-Volatile Methylene Chloride Extract	112.50
Overrun for Whipped Topping	33.75
Particle Size (Ether Wash)	22.50
pH	11.25
pH—Quinhydrone (Cheese)	22.50

TABLE 4.—SINGLE TEST LABORATORY FEES FOR OTHER CHEMICAL AND PHYSICAL COMPONENT ANALYSES—Continued

Type of analysis	List fee
Potassium Iodide (Table Salt)	67.50
Protein Reducing Substances	45.00
Quinic Acid (Cranberry Juice)	78.75
Serum Drainage for Whipped Topping	22.50
Sieve or Particle Size	22.50
Rate of Wetting (Nondairy Creamer)	22.50
Reducing Sugars	90.00
Water Activity	22.50
Water Insoluble Inorganic: Residues (WIIR)	90.00

TABLE 5.—SINGLE TEST LABORATORY FEES FOR MICROBIOLOGICAL ANALYSES

Type of analysis	List fee
Aerobic (Standard) Plate Count	$22.50
Anaerobic Bacterial Plate Count	33.75
Bacillus cereus	90.00
Bacterial Direct Microscopic Count	45.00
Coliform Plate Count (Dairy Products)	22.50
Coliform Plate Count, Violet Red Bile Agar (Presumptive Coliform Plate Count)	33.75
Coliforms, Most Probable Number (MPN): [1]	
Step 1	33.75
Step 2	22.50
Direct Microscopic Clump Count	11.25
Direct Microscopic Clump Count— Greater Than 75 Million	45.00
E. coli, Presumptive MPN (Additional) [2]	45.00
E. coli (MUG [3])	33.75
Enterococci Count	135.00
Howard Mold Count [4]	56.25
Lactobacillus Count [5]	56.25
Lactic Acid Tolerant Microbes	22.50
Listeria monocytogenes Confirmation Analysis: [6]	
Step 1	67.50
Step 2	56.25
Step 3 (Confirmation)	112.50
Parasite Identification	180.00
Psychrotrophic Bacterial Plate Count	45.00
Salmonella (USDA Culture Method): [7]	
Step 1	78.75
Step 2	33.75
Step 3 (Confirmation)	56.25
Salmonella Enumeration (Complete Test)	135.00
Salmonella (Rapid Methods): [8]	
Step 1	78.75
Step 2	33.75
Step 3 (Confirmation)	56.25
Salmonella typhi (Meat Products) [9]	45.00
Staphylococcus aureus, Direct Plating	67.50
Staphylococcus aureus, MPN: With Coagulase Positive Confirmation	78.75
Thermoduric Bacterial Plate Count	33.75
Yeast and Mold Count	22.50
Yeast and Mold Differential Confirmation	22.50
Yeast and Mold Differential Plate Count	33.75
Yeast or Mold Confirmation	22.50

[1] Coliform MPN analysis may be in two steps as follows: Step 1—presumptive test through lauryl sulfate tryptose broth; Step 2—confirmatory test through brilliant green lactose bile broth.

[2] Step 1 of the coliform MPN analysis is a prerequisite for the performance of the presumptive *E. coli* test. Prior enrichment in lauryl sulfate tryptose broth is required for optimal recovery of *E. coli* from inoculated and incubated EC broth (*Escherichia coli* broth). The *E. coli* test is performed through growth on eosin methylene blue agar. The fee stated for *E. coli* analysis is a supplementary charge to step 1 of coliform test.

[3] In the presence of the substrate 4-methylumbelliferone-β-D-glucuronide (MUG), the enzyme β-glucuronidase, which is found in the majority of *E. coli* strains, produces a fluorogenic end product which is visible under ultraviolet (UV) light.

[4] Howard Mold Count involves counting mold filaments in commodity products.

[5] Determination of bacterial plate count of different species of *Lactobacillus.*

[6] *Listeria monocytogenes* test using the USDA method may be in three steps as follows: Step 1—isolation by University of Vermont modified (UVM) broth and Fraser's broth enrichments and selective plating with Modified Oxford (MOX) agar; Presumptive Step 2—typical colonies inoculated from Horse Blood into brain heart infusion (BHI) broth and check for characteristic motility; Confirmatory Step 3—culture from BHI broth with typical motility is inoculated into the seven biochemical media, BHI agar for oxidase and catalase tests, Motility test medium, and Christie-Atkins-Munch-Peterson (CAMP) test.

Listeria monocytogenes test using the FDA method may be in three steps as follows: Step 1—isolation by trypticase soy broth with 0.6% yeast extract (TSB–YE) broth enrichment and selective plating with Modified McBrides agar and Lithium chloride Phenylethanol Moxalactam (LPM) agar; Presumptive Step 2—typical colonies inoculated to trypticase soy agar with yeast extract (TSA–YE) with sheep blood plates to check for hemolysis followed by inoculations to BHI broth and TSA–YE plates to check for characteristic motility, gram stain and catalase test; Confirmatory Step 3—culture from BHI broth with typical motility for wet mount is inoculated into the required 10 biochemical media, Sulfide-Indole-Motility (SIM) medium, and the CAMP test. Serology is checked using growth from TSA–YE plates.

Both methods for *Listeria* determination have the equivalent time needed for each step.

[7] *Salmonella* test may be in three steps as follows: Step 1— growth through differential agars; Step 2—growth and testing through triple sugar iron and lysine iron agars; Step 3— confirmatory test through biochemicals, and polyvalent serological testing with Poly ''O'' and Poly ''H'' antiserums. The serological typing of *Salmonella* is requested on occasion.

[8] *Salmonella* test may be in three steps as follows: Step 1—growth in enrichment broths and ELISA test or DNA hybridization system assay; Step 2—growth and testing through triple sugar iron and lysine iron agars; Step 3—confirmatory test through biochemicals, and polyvalent serological testing with Poly ''O'' and Poly ''H'' antiserums.

[9] *Salmonella typhi* determination in mechanically deboned meat.

TABLE 6.—LABORATORY FEES FOR AFLATOXIN ANALYSES

Aflatoxin test by commodity	Single analysis fee	Pair analyses [1] fee
Peanut Butter (TLC–CB, HPLC, Affinity Column)	$45.00	NA [2]
Corn (TLC–CB, HPLC, Affinity Column)	45.00	NA
Roasted Peanuts (TLC–BF)	45.00	NA
Brazil Nuts (TLC–BF)	90.00	NA
Pistachio Nuts (TLC–BF, HPLC)	90.00	NA
Shelled Peanuts (TLC, Affinity Column)	45.00	38.00
Shelled Peanuts (HPLC)	45.00	70.00
Tree Nuts (TLC)	45.00	NA
Oilseed Meals (TLC, HPLC, Affinity Column)	45.00	NA
Edible Seeds (TLC)	45.00	NA
Dried Fruit (TLC)	45.00	NA
Small Grains (TLC)	45.00	NA
In-Shell Peanuts (TLC, Affinity Column)	45.00	38.00
In-Shell Peanuts (HPLC)	45.00	70.00
Silage; Other Grains (TLC)	45.00	NA
Submitted Samples (TLC, HPLC, Affinity Column)	45.00	NA
Aflatoxin (Dairy, Eggs)	157.50	NA

[1] Aflatoxin testing of raw peanuts under Peanut Marketing Agreement for subsamples 1–AB, 2–AB, 3–AB, and 1–CD for single or pair of analyses is $19.00 or $38.00, respectively using Thin-Layer Chromatography (TLC) and Best Foods (BF) extraction or immunoaffinity column assay with fluorometric quantitation. The BF method has been modified to incorporate a water slurry extraction procedure. The Contaminants Branch (CB) method is used on occasion as an alternative method for peanuts and peanut meal when doubt exists as to the effectiveness of the Best Foods method in extracting aflatoxin from the sample or when background interferences exist that might mask TLC quantitation of aflatoxin. The cost per single or pair of analyses using High Pressure Liquid Chromatography (HPLC) is $35.00 and $70.00, respectively. Other aflatoxin analyses for fruits and vegetables are listed at Science and Technology's current hourly rate of $45.00.

[2] NA denotes not applicable.

TABLE 7.—MISCELLANEOUS CHARGES SUPPLEMENTAL TO THE SCIENCE AND TECHNOLOGY'S LABORATORY ANALYSIS FEES

Laboratory service description	List fee
Sample Grinding by Vertical Cutter Mixer (VCM)	$22.50.
Sample Grinding Canned Boned Poultry	11.25 per can.
Sample Grinding by Dickens Hammer Mill	11.25.
Sample Grinding (Meats, Meat Products, Meals, Ready-to-Eat):	
Per pouch or raw sample	11.25.
Per tray pack	22.50.
Compositing Multiple Subsamples for an Individual Test Sample Unit per subsample.	Varies Preparation fee based on $45.00 per hour.

TABLE 8.—ADDITIONAL CHARGES APPLICABLE TO THE SAMPLE RECEIPT AND ANALYSIS REPORT

Service description	List charge
Courier Expense at Other AMS Laboratories: Mileage Charge Set at 32.5 Per Mile Round Trip from Laboratory to Delivery Site.	Varies (based on total mileage).
Facsimile Charge (Per Analysis Report)	$3.20 minimum up to first 3 pages, then $1.50 per page.
Additional Analysis Report or Extra Certificate (½ hour charge)	$22.50 per report or certificate reissued.

§ 91.38 Additional fees for appeal of analysis.

(a) The appellant will be charged an additional fee at a rate of 1.5 times the standard rate stated in § 91.37(a) if, as a result of an authorized appeal analysis, it is determined that the original test results are correct. The appeal laboratory rate is $67.50 per analysis hour.

(b) The appeal fee will be waived if the appeal laboratory test discloses that an inadvertent error was made in the original analysis.

§ 91.39 Premium hourly fee rate for overtime and legal holiday service.

(a) Laboratory analyses initiated at the special request of the applicant to be rendered on Saturdays, Sundays, Federal holidays, and on an overtime basis will be charged at a rate of 1.5 times the standard rate stated in § 91.37 (a). The premium laboratory rate for holiday and overtime service will be $67.50 per analysis hour.

(b) Information on legal holidays or what constitutes overtime service at a particular S&T laboratory is available from the Laboratory Director or facility supervisor.

§ 91.40 Fees for courier service and facsimile of the analysis report.

(a) The Science and Technology laboratories have a courier charge per trip to retrieve the sample package. The courier service charge is determined from the established single standard mileage rate and from the total authorized distance based on the shortest round trip route from laboratory to sample retrieval site. Pursuant to the requirements of Title 5, United States Code (U.S.C.), part III, subpart D, § 5704, paragraph (a) (1), the automobile reimbursement rate per mile established by the Administrator of General Services for an employee who is engaged on official business for the Government cannot exceed the single standard mileage rate established by the Internal Revenue Service (IRS).

(b) The faxing of laboratory analysis reports or certificates is an optional service for each S&T facility offered at a fee specified in table 8 in § 91.37.

§ 91.41 [Amended]

22.–26. In § 91.41, the words ''Division Director'' are revised to read ''Deputy Administrator.''

27. § 91.42 is revised to read as follows:

§ 91.42 Billing.

(a) Each billing cycle will end on the 25th of the month. The applicant will be billed by the National Finance Center using the Billings and Collections System (BLCO) on the 1st day, following the end of the billing cycle in which voluntary laboratory services and other services were rendered at a particular Science and Technology laboratory.

(b) The total charge shall normally be stated directly on the analysis report or on a standardized official certificate form for the laboratory analyses of a specific agricultural commodity and related commodity products.

(c) The actual bill for collection will be issued by the USDA, National Finance Center Billings and Collection Branch, (Mail: P.O. Box 60075), 13800 Old Gentilly Road, New Orleans, Louisiana 70160–0001.

28. In § 91.43, paragraph (b) is revised and in paragraph (c) the words ''Division Director'' are removed and the words ''Deputy Administrator'' are added in their place to read as follows:

§ 91.43 Payment of fees and charges.

* * * * *

(b) Fees and charges for services under a cooperative agreement with a State or other AMS programs or other governmental agency will be paid in accordance with the terms of the cooperative agreement.

* * * * *

29. In § 91.44, paragraph (e) is revised to read as follows:

§ 91.44 Charges on overdue accounts and issuance of delinquency notices.

* * * * *

(e) The Deputy Administrator of S&T program and personnel of the USDA, NFC Billings and Collections Branch (address as listed in § 91.42) will take such actions as may be necessary to collect any delinquent amounts due for accounts in claim status.

30. Section 91.45 is revised to read as follows:

§ 91.45 Charges for laboratory services on a contract basis.

(a) Irrespective of hourly fee rates and charges prescribed in § 91.37, or in other sections of this subchapter E, the Deputy Administrator may enter into contracts with applicants to perform continuous laboratory services or other types of laboratory services pursuant to the regulations in this part and other requirements, as prescribed by the Deputy Administrator in such contract. In addition, the charges for such laboratory services, provided in such contracts, shall be on such basis as will reimburse the Agricultural Marketing Service of the Department for the full cost of rendering such laboratory services, including an appropriate overhead charge to cover administrative overhead expenses as may be determined by the Administrator.

(b) Irrespective of hourly fee rates and charges prescribed in this subpart I, or in other parts of this subchapter E, the Deputy Administrator may enter into a written Memorandum of Understanding (MOU) or agreement with any administrative agency or governing party for the performance of laboratory services pursuant to said agreement or order on a basis that will reimburse the Agricultural Marketing Service of the Department for the full cost of rendering such laboratory service, including an appropriate overhead administrative overhead charge.

(c) The conditions and terms for renewal of such Memorandum of Understanding or agreement shall be specified in the contract.

PART 92—[AMENDED]

1. The authority citation for part 92 continues to read as follows:

Authority: 7 U.S.C. 511m and 7 U.S.C. 511r.

§ 92.1 [Amended]

2. In § 92.1, the words ''Science and Technology Division's'' are revised to read ''Science and Technology's''.

§ 92.2 [Amended]

3. Section 92.2 is amended as follows:

a. Remove the definition of ''Certificate of Analysis (Form CSSD–3)''.

b. Revise the definitions for ''2,4-D'', ''DDE'', ''Dicamba'', ''HCB'', ''Maximum pesticide residue level'', ''Pesticide certification'', ''Pesticide test sample'',''Sample Identification Form (Form TB-89)'', ''2,4,5-T'', ''TDE'', and ''Tobacco''.

c. Add two new definitions of ''AMS'' and ''Certificate of Analysis (Form TB–92)'' in alphabetical order to read as follows:

§ 92.2 Definitions.

* * * * *

AMS. The abbreviations for the Agricultural Marketing Service (AMS) agency of the United States Department of Agriculture.

* * * * *

Certificate of Analysis (Form TB–92). A legal document on which the confirmed test results for official samples will be testified to be correct by a Science and Technology chemist in charge of testing.

2,4-D. The common abbreviation for the acid herbicide 2,4-Dichlorophenoxyacetic acid.

* * * * *

DDE. The common abbreviation for the chlorinated pesticide Dichlorodiphenyldichloroethylene. Degradation product of DDT by loss of one molecule of hydrochloric acid or referred to as a dehydrohalogenation process.

* * * * *

Dicamba. The common name for the acid herbicide 2-Methoxy-3,6-dichlorobenzoic acid.

* * * * *

HCB. The common abbreviation for the organochlorine pesticide Hexachlorobenzene.

* * * * *

Maximum pesticide residue level. The maximum concentration of residue allowable for a specific pesticide or combination of pesticides, as set forth in 7 CFR 29.427 by the AMS Deputy Administrator of the Tobacco Programs.

* * * * *

Pesticide certification. A document issued by the Tobacco Programs in a form approved by its AMS Deputy Administrator, containing a certification by the importer that flue-cured and burley tobacco offered for importation does not exceed the maximum allowable residue levels of any pesticide that has been canceled, suspended, revoked, or otherwise prohibited under the Federal Insecticide, Fungicide, and Rodenticide Act (FIFRA).

Pesticide test sample. An official sample or samples, collected from a lot of tobacco by the AMS Tobacco Programs inspector for analysis by a certified chemist to ascertain the residue levels of pesticides that have been canceled, suspended, revoked, or otherwise prohibited under the FIFRA.

Sample Identification Form (Form TB–89). A document titled ''Imported Tobacco Pesticide Residue Analysis'' that is approved by the AMS Deputy Administrator of the Tobacco Programs that identifies and accompanies the sample to the testing facility.

2,4,5-T. The common abbreviation for the acid herbicide 2,4,5-Trichlorophenoxyacetic acid.

TDE. DDD or the common abbreviation for the chlorinated insecticide 1,1-Dichloro-2,2-bis(p-chlorophenyl)ethane (CAS number 72–54–8).

* * * * *

Tobacco. Tobacco as it appears between the time it is cured and stripped from the stalk, or primed and cured, in whole leaf or strip form, and the time it enters into the different manufacturing processes. Conditioning, sweating, stemming, and threshing are not regarded as manufacturing processes. Tobacco, as used in this part, does not include manufactured or semi-manufactured products, stems, cuttings, clippings, trimmings, siftings, or dust.

4. Section 92.3 is revised to read as follows:

§ 92.3 Location for laboratory testing and kind of services available.

(a) The analytical testing of imported Type 92 flue-cured tobacco samples and imported Type 93 burley tobacco samples for maximum pesticide residue level determinations is performed at the AMS Science and Technology's Eastern Laboratory and is located at: USDA, AMS, Science and Technology, Eastern Laboratory (Chemistry), 645 Cox Road, Gastonia, NC 28054.

(b) Domestic-grown tobacco and tobacco products may be analyzed for acid herbicides, chlorinated hydrocarbons, fumigants, and organophosphates at the Science and Technology facility in this section.

(c) The Science and Technology facility performs for the AMS Tobacco Programs the quantitative and confirmatory chemical residue analyses on pesticide test samples of imported tobacco for the following specific pesticides:

(1) Organochlorine pesticides such as Dichloro-diphenyldichloroethylene (DDE), Dichloro Diphenyl Trichloroethane (DDT), 1,1-Dichloro-2,2-bis(p-chlorophenyl)ethane (TDE), Toxaphene, Endrin, Aldrin, Dieldrin, Heptachlor, Methoxychlor, Chlordane, Heptachlor Epoxide, Hexachlorobenzene (HCB), Cypermethrin, and Permethrin.

(2) Organophosphorus pesticides such as Formothion.

(3) Fumigants such as Ethylene Dibromide (EDB) and Dibromochloropropane (DBCP).

(4) Acid herbicides such as 2,4-D, 2,4,5-T, and Dicamba.

5. In § 92.4, paragraph (b) is revised to read as follows:

§ 92.4 Approved forms for reporting analytical results.

* * * * *

(b) Test results of the pesticide analyses for tobacco shall be recorded on ''Certificate of Analysis For Official Samples'', Form TB–92, and shall be expressed as parts by weight of the residue per one million parts by weight of the tobacco sample (parts per million or ppm), which concentration is representative for each particular pesticide residue found in the lot of tobacco. Form TB–92 is attached to Form TB–89 that is returned to the AMS Tobacco Programs. The analytical data on Form TB–92 substantiates the information placed on Form TB–89.

6. Section 92.5 is revised to read as follows:

§ 92.5 Analytical methods.

Every chemist certified to analyze tobacco samples for pesticide residue contamination shall follow precisely the USDA developed analytical test methods and all successive official method updates, as approved by the AMS Deputy Administrator, Science and Technology. Many of the official analyses for tobacco are found in the following manuals:

(a) Manual of Analytical Methods for the Analysis of Pesticide Residues in Human and Environmental Samples, EPA 600/9–80–038, U.S. Environmental Protection Agency (EPA) Chemical Exposure Research Branch, EPA Office of Research and Development (ORD), 26 West Martin Luther King Drive, Cincinnati, Ohio 45268.

(b) Official Methods of Analysis of AOAC INTERNATIONAL, Volumes I and II, AOAC INTERNATIONAL, 481 North Frederick Avenue, Suite 500, Gaithersburg, MD 20877–2417.

(c) U.S. Food and Drug Administration, Pesticide Analytical Manuals (PAM), Volumes I and II, Food and Drug Administration, Center for Food Safety and Applied Nutrition (CFSAN), 200 C Street, SW, Washington, DC 20204 (available from National Technical Information Service (NTIS), U.S. Department of Commerce, 5285 Port Royal Road, Springfield, VA 22161).

7. Section 92.6 is revised to read as follows:

§ 92.6 Cost for pesticide analysis set by cooperative agreement.

The fee for the pesticide analysis of tobacco is set by the AMS Tobacco Programs, in conjunction with the AMS Science and Technology program, and appears at 7 CFR 29.500 as part of Tobacco Programs' fees for sampling and certification of imported flue-cured and burley tobacco. A Memorandum of Understanding (MOU) exists between the Tobacco Programs and the Science and Technology (S&T) for the testing of imported tobacco samples for pesticide residue contamination, and the corresponding agreement on the cost of analyses is specified in the MOU.

PART 93—[AMENDED]

1. The authority citation for part 93 continues to read as follows:

Authority: 7 U.S.C. 1622, 1624.

§ 93.2 [Amended]

2. In § 93.2, the definitions for ''Brix or degrees Brix'', ''Brix value'' and ''Recoverable oil'' are revised to read as follows:

§ 93.2 Definitions.

* * * * *

Brix or degrees Brix. The percent by weight concentration of the total soluble solids of the juice or citrus product when tested with a Brix hydrometer calibrated at 20 °C (68 °F) and to which any applicable temperature correction has been made. The Brix or degrees Brix may be determined by any other method which gives equivalent results.

Brix value. The pure sucrose or soluble solids value of the juice or citrus product determined by using the

refractometer along with the ''International Scale of Refractive Indices of Sucrose Solutions'' and to which the applicable correction for acidity is added. The Brix value is determined in accordance with the refractometer method outlined in the Official Methods of Analysis of AOAC INTERNATIONAL, Volumes I & II.

* * * * *

Recoverable oil. The percent of oil by volume, determined by the bromate titration method after distillation and acidification as described in the current edition of the Official Methods of Analysis of AOAC INTERNATIONAL, Volumes I & II.

* * * * *

3. Section 93.3 is revised to read as follows:

§ 93.3 Analyses available and location of laboratory.

(a) Laboratory analyses of citrus juice and other citrus products are being performed at the following Science and Technology location: USDA, AMS, S&T Eastern Laboratory (Citrus), 98 Third Street, S.W., Winter Haven, FL 33880.

(b) Laboratory analyses of citrus fruit and products in Florida are available in order to determine if such commodities satisfy the quality and grade standards set forth in the Florida Citrus Code (Florida Statutes Pursuant to Chapter 601). Such analyses include tests for acid as anhydrous citric acid, Brix, Brix/acid ratio, recoverable oil, and artificial coloring matter additive, as turmeric. The Fruit and Vegetable Inspectors of the Division of Fruit and Vegetable of the Florida Department of Agriculture and Consumer Services may also request analyses for arsenic metal, pulp wash (ultraviolet and fluorescence), standard plate count, yeast with mold count, and nutritive sweetening ingredients as sugars.

(c) There are additional laboratory tests available upon request at the Science and Technology Eastern (Citrus) Laboratory at Winter Haven, Florida. Such analyses include tests for vitamins, naringin, sodium benzoate, *Salmonella*, protein, salt, pesticide residues, sodium metal, ash, potassium metal, and coliforms for citrus products.

4. Section 93.4 is revised to read as follows:

§ 93.4 Analytical methods.

(a) The majority of analytical methods for citrus products are found in the Official Methods of Analysis of AOAC INTERNATIONAL, Volumes I & II, AOAC INTERNATIONAL, 481 North Frederick Avenue, Suite 500, Gaithersburg, MD 20877–2417.

(b) Other analytical methods for citrus products may be used as approved by the AMS Deputy Administrator, Science and Technology (S&T).

5. Section 93.5 is revised to read as follows:

§ 93.5 Fees for citrus product analyses set by cooperative agreement.

The fees for the analyses of fresh citrus juices and other citrus products shall be set by mutual agreement between the applicant, the State of Florida, and the AMS Deputy Administrator, Science and Technology programs. A Memorandum of Understanding (MOU) or cooperative agreement exists presently with the AMS Science and Technology and the State of Florida, regarding the set hourly rate and the costs to perform individual analytical tests on Florida citrus products, for the State.

6. In § 93.11, the definitions for ''Aflatoxin'' and ''Peanut Administrative Committee (PAC)'' are revised to read as follows:

§ 93.11 Definitions.

* * * * *

Aflatoxin. A toxic metabolite produced by the molds *Aspergillus flavus, Aspergillus parasiticus,* and *Aspergillus nomius.* The aflatoxin compounds fluoresce when viewed under UV light as follows: aflatoxin B_1 and derivatives with a blue fluorescence, aflatoxin B_2 with a blue-violet fluorescence, aflatoxin G_1 with a green fluorescence, aflatoxin G_2 with a green-blue fluorescence, aflatoxin M_1 with a blue-violet fluorescence, and aflatoxin M_2 with a violet fluorescence. These closely related molecular structures are referred to as aflatoxin B_1, B_2, G_1, G_2, M_1, M_2, GM_1, B_{2a}, G_{2a}, R_0, B_3, 1-OCH_3B_2, and 1-CH_3G_2.

Peanut Administrative Committee (PAC). The committee established under the United States Department of Agriculture Marketing Agreement for Peanuts, 7 CFR part 998, which administers the terms and provisions of this Agreement, including the aflatoxin control program for domestically produced raw peanuts, for peanut shellers. The Peanut Administrative Committee (PAC) headquarters are at 2537 Lafayette Plaza Drive Suite A; Albany, Georgia 31707.

* * * * *

7. Section 93.12 is revised to read as follows:

§ 93.12 Analyses available and locations of laboratories.

(a) *Aflatoxin testing services.* The aflatoxin analyses for peanuts, peanut products, dried fruits, grains, edible seeds, tree nuts, shelled corn products, cottonseed, oilseed products and other commodities are performed at the following 6 locations for AMS Science and Technology (S&T) Aflatoxin Laboratories:

(1) USDA, AMS, S&T, 1211 Schley Avenue, Albany, GA 31707.
(2) USDA, AMS, S&T, c/o Golden Peanut Company, Mail: P.O. Box 279, 301 West Pearl Street, Aulander, NC 27805.
(3) USDA, AMS, S&T, 610 North Main Street, Blakely, GA 31723.
(4) USDA, AMS, S&T, 107 South Fourth Street, Madill, OK 73446.
(5) USDA, AMS, S&T, c/o Cargill Peanut Products, Mail: P.O. Box 272, 715 North Main Street, Dawson, GA 31742–0272.
(6) USDA, AMS, S&T, Mail: P.O. Box 1130, 308 Culloden Street, Suffolk, VA 23434.

(b) *Peanuts, peanut products, and oilseed testing services.* (1) The Science and Technology (S&T) Aflatoxin Laboratories at Madill, Oklahoma and Blakely, Georgia will perform other analyses for peanuts, peanut products, and a variety of oilseeds. The analyses for oilseeds include testing for free fatty acids, ammonia, nitrogen or protein, moisture and volatile matter, foreign matter, and oil (fat) content.

(2) All of the analyses described in paragraph (b)(1) of this section performed on a single seed sample are billed at the rate of one hour per sample. Any single seed analysis performed on a single sample is billed at the rate of one-half hour per sample. The standard hourly rate shall be as specified in § 91.37(a) of this subchapter.

(c) *Vegetable oil testing services.* The analyses for vegetable oils are performed at the USDA, AMS, Science and Technology (S&T) Midwestern Laboratory, 3570 North Avondale Avenue, Chicago, IL 60618–5391. The analyses for vegetable oils will include the flash point test, smoke point test, acid value, peroxide value, phosphorus in oil, and specific gravity. The fee charged for any single laboratory analysis for vegetable oils shall be obtained from the Midwestern Laboratory Director and it is based on the hourly fee rates and charges as specified in 7 CFR part 91, subpart I.

8. Section 93.13 is revised to read as follows:

§ 93.13 Analytical methods.

Official analyses for peanuts, nuts, corn, oilseeds, and related vegetable oils are found in the following manuals:

(a) Approved Methods of the American Association of Cereal

Chemists (AACC), American Association of Cereal Chemists/Eagan Press, 3340 Pilot Knob Road, St. Paul, Minnesota 55121–2097.

(b) ASTA's Analytical Methods Manual, American Spice Trade Association (ASTA), 560 Sylvan Avenue, P.O. Box 1267, Englewood Cliffs, New Jersey 07632.

(c) Analyst's Instruction for Aflatoxin (August 1994), S&T Instruction No. 1, USDA, Agricultural Marketing Service, Science and Technology, 3521 South Agriculture Building, 1400 Independence Avenue, SW, P.O. Box 96456, Washington, DC 20090–6456.

(d) Official Methods and Recommended Practices of the American Oil Chemists' Society (AOCS), American Oil Chemists' Society, P.O. Box 3489, 2211 West Bradley Avenue, Champaign, Illinois 61821–1827.

(e) Official Methods of Analysis of AOAC INTERNATIONAL, Volumes I & II, AOAC INTERNATIONAL, 481 North Frederick Avenue, Suite 500, Gaithersburg, MD 20877–2417.

(f) Standard Analytical Methods of the Member Companies of Corn Industries Research Foundation, Corn Refiners Association (CRA), 1701 Pennsylvania Avenue, NW, Washington, DC 20006.

(g) U.S. Army Natick Research, Development and Engineering Center's Military Specifications, approved analytical test methods noted therein, Code NPP–9, Department of Defense Single Stock Point (DODSSP) for Military Specifications, Standards, Building 4/D, 700 Robbins Avenue, Philadelphia, PA 19111–5094.

9. Section 93.14 is revised to read as follows:

§ 93.14 Fees for aflatoxin analysis and fees for testing of other mycotoxins.

(a) The fee charged for any laboratory analysis for aflatoxins and other mycotoxins shall be obtained from the Laboratory Director for aflatoxin laboratories at the Dothan administrative office as follows: USDA, AMS, Science & Technology, 3119 Wesley Way, Suite 6, Dothan, Alabama 36305, Voice Phone: 334–794–5070, Facsimile: 334–792–1432.

(b) The charge for the aflatoxin testing of raw peanuts under the Peanut Marketing Agreement for subsamples 1–AB, 2–AB, 3–AB, and 1–CD is a set cost per pair of analyses and shall be set by cooperative agreement between the Peanut Administrative Committee and AMS Science and Technology program.

10. Section 93.15 is revised to read as follows:

§ 93.15 Fees for analytical testing of oilseeds.

The fee charged for any laboratory analysis for oilseeds shall be obtained from the Laboratory Director for aflatoxin laboratories at the Dothan administrative office as listed in § 93.14(a).

PART 94—[AMENDED]

1. The authority citation for part 94 continues to read as follows:

Authority: Secs. 2–28 of the Egg Products Inspection Act (84 Stat. 1620–1635; 21 U.S.C. 1031–1056), Agricultural Marketing Act of 1946, Secs. 202–208 as amended (60 Stat. 1087–1091; 7 U.S.C. 1621–1627).

2. In § 94.2, the definitions for ''Egg'', ''Egg product'' and ''Mandatory sample'' are revised to read as follows:

§ 94.2 Definitions.

* * * * *

Egg. The shell egg of the domesticated chicken, turkey, duck, goose, or guinea. Some of the terms applicable to shell eggs are defined by the AMS Poultry Programs in 7 CFR 57.5.

Egg product. Any dried, frozen, or liquid eggs, with or without added ingredients. However, products which contain eggs only in a relatively small proportion or historically have not been, in the judgment of the Secretary, considered by consumers as products of the egg food industry may be exempted by the Secretary under such conditions as may be prescribed to assure that the egg ingredients are not adulterated and such products are not represented as egg products. Some of the products exempted as not being egg products are specified by the AMS Poultry Programs in 7 CFR 57.5.

Mandatory sample. An official sample of egg product(s) taken for testing under authority of the Egg Products Inspection Act (21 U.S.C. 1031–1056) for analysis by a United States Department of Agriculture, Agricultural Marketing Service, Science and Technology laboratory at government expense. A mandatory sample shall include an egg product sample to be analyzed for microbiological, chemical, or physical attributes. A mandatory egg product sample analyzed for the presence of *Salmonella* is also referred to as a confirmation sample as specified by the Food Safety and Inspection Service agency of USDA in 9 CFR 590.580, paragraph (d).

* * * * *

3. In § 94.3, paragraphs (a), (b) and (e) are revised to read as follows:

§ 94.3 Analyses performed and locations of laboratories.

(a) Samples drawn by a USDA egg products inspector will be analyzed by AMS Science and Technology (S&T) personnel for microbiological, chemical, and physical attributes. The analytical results of these samples will be reported to the resident egg products inspector at the applicable plant on the official certificate.

(b) Mandatory egg product samples for *Salmonella* are required and are analyzed in S&T laboratories to spot check and confirm the adequacy of USDA approved and recognized laboratories for analyzing routine egg product samples for *Salmonella.*

* * * * *

(e) The AMS Science and Technology's Eastern Laboratory shall conduct the majority of laboratory analyses for egg products. The analyses for mandatory egg product samples are performed at the following USDA location: USDA, AMS, Science & Technology, Eastern Laboratory (Microbiology), 2311–B Aberdeen Boulevard, Gastonia, NC 28054.

4. Section 94.4 is revised to read as follows:

§ 94.4 Analytical methods.

The majority of analytical methods used by the USDA laboratories to perform mandatory analyses for egg products are listed as follows:

(a) Compendium Methods for the Microbiological Examination of Foods, Carl Vanderzant and Don Splittstoesser (Editors), American Public Health Association, 1015 Fifteenth Street, NW, Washington, DC 20005.

(b) Edwards, P.R. and W.H. Ewing, Edwards and Ewing's Identification of Enterobacteriaceae, Elsevier Science, Inc., Regional Sales Office, 655 Avenue of the Americas, P.O. Box 945, New York, NY 10159–0945.

(c) FDA Bacteriological Analytical Manual (BAM), AOAC INTERNATIONAL, 481 North Frederick Avenue, Suite 500, Gaithersburg, MD 20877–2417.

(d) Manual of Analytical Methods for the Analysis of Pesticide Residues in Human and Environmental Samples, EPA 600/9–80–038, U.S. Environmental Protection Agency (EPA) Chemical Exposure Research Branch, EPA Office of Research and Development (ORD), 26 West Martin Luther King Drive, Cincinnati, Ohio 45268.

(e) Official Methods of Analysis of AOAC INTERNATIONAL, Volumes I & II, AOAC INTERNATIONAL, 481 North Frederick Avenue, Suite 500, Gaithersburg, MD 20877–2417.

(f) Standard Methods for the Examination of Dairy Products, American Public Health Association, 1015 Fifteenth Street, NW, Washington, DC 20005.

(g) Standard Methods for the Examination of Water and Wastewater, American Public Health Association (APHA), the American Water Works Association (AWWA) and the Water Pollution Control Federation, AWWA Bookstore, 6666 West Quincy Avenue, Denver, CO 80235.

(h) Test Methods for Evaluating Solid Waste Physical/Chemical Methods, Environmental Protection Agency, Office of Solid Waste, SW–846 Integrated Manual (available from National Technical Information Service (NTIS), U.S. Department of Commerce, 5285 Port Royal Road, Springfield, VA 22161).

(i) U.S. Food and Drug Administration, Pesticide Analytical Manuals (PAM), Volumes I and II, Food and Drug Administration, Center for Food Safety and Applied Nutrition (CFSAN), 200 C Street, SW, Washington, DC 20204 (available from National Technical Information Service (NTIS), U.S. Department of Commerce, 5285 Port Royal Road, Springfield, VA 22161).

PART 98—[AMENDED]

1. The authority citation for part 98 continues to read as follows:

Authority: 7 U.S.C. 1622, 1624.

2. In part 98, the words ''Science and Technology Division'' are revised to read ''Science and Technology'', and the word ''S&TD'' is revised to read ''S&T'' everywhere they appear.

Dated: May 22, 2000.

William J. Franks, Jr.,

Deputy Administrator, Science and Technology, Agricultural Marketing Service.

[FR Doc. 00–13238 Filed 5–25–00; 8:45 am]

BILLING CODE 3410–02–P

Federal Register

Friday,
May 26, 2000

Part V

Department of Transportation

Federal Aviation Administration

14 CFR Part 39

Airworthiness Directives; McDonnell Douglas Model DC–9–80 and MD–90–30 Series Airplanes and Model MD–88 Airplanes; Final Rule

Airworthiness Directives; McDonnell Douglas Model DC–10–10F, DC–10–15, DC–10–30, DC–10–30F, and DC–10–40 Series Airplanes, and Model MD–11 and –11F Series Airplanes; Final Rule

DEPARTMENT OF TRANSPORTATION

Federal Aviation Administration

14 CFR Part 39

[Docket No. 99–NM–161–AD; Amendment 39–11749; AD 2000–11–01]

RIN 2120–AA64

Airworthiness Directives; McDonnell Douglas Model DC–9–80 and MD–90–30 Series Airplanes, and Model MD–88 Airplanes

AGENCY: Federal Aviation Administration, DOT.

ACTION: Final rule.

SUMMARY: This amendment adopts a new airworthiness directive (AD), applicable to certain McDonnell Douglas Model DC–9–80 and MD–90–30 series airplanes, and Model MD–88 airplanes, that requires a determination be made of whether, and at what locations, metallized polyethyleneteraphthalate (MPET) insulation blankets are installed, and replacement of MPET insulation blankets with new insulation blankets. This amendment is prompted by reports of in-flight and ground fires on certain airplanes manufactured with insulation blankets covered with MPET, which may contribute to the spread of a fire when ignition occurs from small ignition sources such as electrical arcing or sparking. The actions specified by this AD are intended to ensure that insulation blankets constructed of MPET are removed from the fuselage. Such insulation blankets could propagate a small fire that is the result of an otherwise harmless electrical arc and could lead to a much larger fire.

DATES: Effective June 30, 2000.

The incorporation by reference of certain publications listed in the regulations is approved by the Director of the Federal Register as of June 30, 2000.

ADDRESSES: The service information referenced in this AD may be obtained from Boeing Commercial Aircraft Group, Long Beach Division, 3855 Lakewood Boulevard, Long Beach, California 90846, Attention: Technical Publications Business Administration, Dept. C1–L51 (2–60). This information may be examined at the Federal Aviation Administration (FAA), Transport Airplane Directorate, Rules Docket, 1601 Lind Avenue, SW., Renton, Washington; or at the FAA, Transport Airplane Directorate, Los Angeles Aircraft Certification Office, 3960 Paramount Boulevard, Lakewood, California; or at the Office of the Federal Register, 800 North Capitol Street, NW., suite 700, Washington, DC.

FOR FURTHER INFORMATION CONTACT: Robert Stacho, Aerospace Engineer, Systems and Equipment Branch, ANM–130L, FAA, Transport Airplane Directorate, Los Angeles Aircraft Certification Office, 3960 Paramount Boulevard, Lakewood, California 90712–4137; telephone (562) 627–5334; fax (562) 627–5210.

SUPPLEMENTARY INFORMATION: A proposal to amend part 39 of the Federal Aviation Regulations (14 CFR part 39) to include an airworthiness directive (AD) that is applicable to certain McDonnell Douglas Model DC–9–80 and MD–90–30 series airplanes, and Model MD–88 airplanes was published as a notice of proposed rulemaking (NPRM) in the **Federal Register** on August 12, 1999 (64 FR 43966). A second proposal that was identical to the NPRM, except that it affected additional airplanes, was published as a supplemental NPRM on November 17, 1999 (64 FR 62613). Those actions proposed to require that a determination be made of whether, and at what locations, metallized polyethyleneteraphthalate (MPET) insulation blankets are installed, and replacement of MPET insulation blankets with new insulation blankets.

Since the issuance of those NPRM's, the FAA has observed several prototyping exercises that involved the removal and replacement of MPET insulation blankets. The information obtained from these exercises assisted the FAA, operators, and manufacturer in understanding the technical details and impact of the requirements of this AD. Certain aspects of these prototype exercises will be discussed in the FAA's response to the comments received from the NPRM's.

Comments

Interested persons have been afforded an opportunity to participate in the making of this amendment. Due consideration has been given to the comments received.

The FAA has received comments in response to the NPRM's and supplemental NPRM's to Rules Docket No.'s. 99–NM–161–AD [applicable to certain McDonnell Douglas Model DC–9–81 (MD–81), DC–9–82 (MD–82), DC–9–83 (MD–83), DC–9–87 (MD–87) series airplanes; Model MD–90–30 series airplanes; and Model MD–88 airplanes] and 99–NM–162—AD (applicable to certain McDonnell Douglas Model DC–10–30 and –30F series airplanes, and Model MD–11 and –11F series airplanes). Because in most cases the issues raised by the commenters are generally relevant to both NPRM's, each final rule includes a discussion of all comments received.

Support for Proposed AD's

Several commenters support the intent of the proposed AD's; however, they request that some changes be made (discussed later).

Unsafe Condition

One commenter states that, because the MPET insulation blankets only propagate the flame and are not the source of the flame, the proposed AD's should address the unsafe condition (*i.e.,* source of the flame) rather than previously certified material (which met the flammability standard at one time) that is not creating the unsafe condition. The FAA does not concur. MPET insulation blankets, when ignited from a small ignition source, such as an electrical arc, can contribute to the spread of a fire. Such insulation blankets could propagate a small fire and lead to a much larger fire. Potential ignition sources exist in many areas of the affected airplanes. It is extremely difficult to determine where all potential ignition sources are. To provide the level of safety that is expected by the public for transport category airplanes, insulation blankets constructed of MPET must be removed. Therefore, the FAA finds that it has properly identified the unsafe condition (*i.e.,* insulation blankets constructed of MPET) addressed by these AD's.

The same commenter suggests that the subject blankets be handled as ''attrition replacements,'' as intended in the original McDonnell Douglas service bulletins. The commenter states that, since cabin interior flammability has been addressed already to a large extent by the FAA, MPET insulation blankets could be treated comparably, and thus, integrated into the overall interior materials requirements. (The FAA infers that the commenter is referring to the provisions in 14 CFR section 121.312 related to ''substantially complete replacement of the cabin interior.'') These requirements not only mandate stricter new standards, but allow older airplane interiors to remain in service until a balanced decision is made to fully reconfigure the cabin. After that decision is made, the entire flammability rule must be met on these older airplane interiors, as well. The commenter argues that insulation blankets could be included, since the proposed requirements are in the same category of ''new flammability standards'' and do not address the actual ignition source.

The FAA does not concur with the commenter's request to handle the subject blankets as ''attrition replacements.'' Attrition is appropriate for safety enhancements, not to correct identified unsafe conditions. There is a distinct difference between correcting an identified unsafe condition and enhancing safety. The intent of the interior material flammability enhancement was to provide occupants more time to evacuate an airplane before the cabin environment would become unsurvivable due to smoke and fire. The existing interior materials were not deemed unsafe, and therefore, could remain in service until the airlines needed to replacement them. With this action, as discussed above, the FAA finds that MPET-covered insulation material represents an unsafe condition that must be corrected. These AD's are a vehicle for ensuring that all affected operators perform the necessary actions that will address the identified unsafe condition. Therefore, these AD's are appropriate and warranted.

One commenter expresses concern that, because the requirements of the proposed AD's are extremely costly and cumbersome, resources are being taken away from more effective measures for improving aviation safety. The commenter states that there are safety groups (both with wide aviation business basis) that have targeted the most important/critical areas to be addressed. However, neither of these groups has fire on board as its top priority. The commenter interprets this to mean that the safety experts looking at statistical data would rather concentrate their efforts in other fields.

While there may be groups that concentrate their efforts in other areas, the FAA has identified an unsafe condition that needs to be corrected (as discussed above). The activity referred to is primarily aimed at identifying areas for improved safety, and focusing resources on the most effective candidates. This is distinctly different from correcting an identified unsafe condition. Therefore, these AD's are appropriate and warranted.

One commenter notes that in its experience most blankets are wet or soaking wet in a short time after coming out fairly dry (*i.e.,* after extensive drying) during a heavy check. The commenter asks how it should explain to its mechanics that they have to replace wet blankets because of a fire hazard.

The FAA infers from this comment that the wet blankets are a result of the atmospheric conditions in which the airplane is being operated or a result of moisture accumulation in the belly of the fuselage. As discussed above, the FAA has identified an unsafe condition on the affected airplanes that needs to be corrected. As addressed in the preambles of the NPRM's, the FAA has received reports of a number of in-flight and ground fires on in-service airplanes manufactured with insulation blankets covered with MPET, which can cause fire to spread from a small ignition source such as electrical arcing or sparking. The fact that insulation material itself may be wet may not prevent the MPET film material from propagating the fire to other combustible materials and causing a larger fire.

One commenter states that the wording ''otherwise harmless electrical arcs'' in the Summary section in the preamble of the proposed AD's is misleading and requests that this wording be removed. The commenter reports that there has never been any Maintenance Steering Group (MSG) 3 testing on airplane wiring, and that no one other than the FAA has even evaluated the problems associated with momentary metal-to-metal contact of wires. In addition, the FAA has never evaluated the effects of spurious signals emitted from degraded wires that can affect flight control surfaces, autopilots, rudders, etc.

The FAA does not concur with the commenter's request to revise the Summary section of the AD's. The term ''otherwise harmless arcs'' refers to an electrical arc that, on insulation films other than MPET, would not propagate a fire. In this case, the effect of the arc is negligible. In the case of MPET, an uncontrolled fire could develop. The FAA points out that these AD's do not address the aging wiring issues that can affect various systems. As discussed in the preamble of the NPRM's, the FAA is continuing to investigate various wiring problems on certain airplanes. In addition, the Aging System Task Force (ASTF) is continuing to investigate the need for specific aging wiring inspections and tests, as well as the potential effect on systems from degraded wiring. The actions required by this AD only address the identified unsafe condition (*i.e.,* insulation blankets constructed of MPET). The FAA may consider additional rulemaking actions to address any other identified unsafe condition.

Risk Assessment

Several commenters state that, in concert with the scheduled prototyping, a thorough risk assessment should be accomplished, particularly on the effects of replacing insulation blankets on the electrical (including wiring, cables, and installations), hydraulic, and mechanical systems. One commenter states that the risk assessment must be taken into account when mandating the scope and compliance of the proposed AD's. Several commenters state that a risk assessment is needed to determine whether areas exist where the risks associated with the replacement of MPET insulation blankets outweigh the benefits of replacing them. Risks inherent with disturbing airplane wiring and other permanently installed systems, particularly on the scale contemplated by the proposed AD's, are of primary concern. This and other related risks should be addressed using a structured method that considers the characteristics of MPET and alternative films, design and operation of overlying systems, susceptibility of those systems to damage during the replacement of insulation under proposed methods, and likely effects of any damage to those systems. One commenter states that the proposed AD's are not supported by such an analysis.

The FAA does not concur that a formal risk assessment is necessary. If accomplished properly, the replacement required by this AD will not disrupt wiring in such a way as to adversely affect safety. Generally, the prototype exercises demonstrated that the required replacement can be accomplished safely. In addition, Boeing is revising the referenced service bulletins to provide additional guidance on techniques to ensure safe replacements. The primary reason for providing an extended compliance time for this AD, as discussed under the next heading, is to ensure that operators have adequate time to accomplish the replacements properly. On the other hand, MPET insulation blankets have been shown to create an unsafe condition that must be corrected. Furthermore, the FAA will require any operator/modifier that develops its own installation data to include specific instructions to ensure that any displaced wires, systems, and installations are in an airworthy condition after accomplishment of the required replacement. The FAA will monitor these areas of concern during the accomplishment of the insulation blanket installations. Finally, if operators can show that removal and replacement of MPET insulation blankets in certain areas of an airplane will create a greater risk of an unsafe condition than leaving the MPET blankets in place, the FAA will consider requests that provide an acceptable level of safety under the provision of paragraph (e) of the final rule. Any request to leave MPET insulation

blankets installed in an airplane must provide justification that the identified unsafe condition has been minimized and that an acceptable level of safety is maintained.

One commenter states that the proposed AD's should be rewritten to limit the blanket replacement to areas of high risk, or conversely, retain existing blankets in areas with no wiring or with wiring deemed to pose little or no hazard.

The FAA does not concur. No technical justification, criteria, or data were submitted to support the commenter's request. Potential ignition sources exist throughout the airplane and insulation blankets constructed of MPET film material are located throughout the airplane. It is, therefore, extremely difficult to identify high risk areas and areas of little or no risk. The FAA finds that MPET insulation blankets in all areas of the affected airplanes must be addressed.

One commenter states that the requirements of the proposed AD's should be recast into phases so as to first respond across the worldwide fleet of affected airplanes to the areas of highest perceived risk. Thereafter, the areas of lesser perceived risk can be dealt with at a more appropriate pace. Targeting the highest perceived risk areas of the worldwide fleet of affected airplanes first would provide the greatest decrease in risk across the fleet most quickly. This approach also would make the best use of limited resources, lessen the substantial adverse impact to the traveling public of excessive fleet groundings, and somewhat reduce the substantial economic burden to the airlines.

The FAA does not concur with the commenter's statement that the requirements of the final rule should be recast into phases. As discussed above under the heading ''Unsafe Condition,'' potential ignition sources exist in many areas of the affected airplanes. It is difficult to identify high risk areas and areas of little or no risk. Therefore, the FAA finds that MPET insulation blankets in all areas of the affected airplanes must be replaced. With the change in the compliance time from 4 to 5 years in this AD, excessive fleet grounding should not take place. Adequate maintenance facilities are available to complete this action within the required time period.

Compliance Time for Proposed Replacement of MPET Insulation Blankets

Several commenters request that the compliance time for accomplishing the proposed replacement of the MPET insulation blankets be extended from the proposed 4 years to a range of 5 years to 8 years. The commenters state that such an extension will allow the replacement to be accomplished during a regularly scheduled ''D'' check or heavy maintenance visit, thereby eliminating any additional expenses that would be associated with special scheduling. The commenters express a concern about the availability of facilities and trained personnel, either domestically or offshore, to accomplish tasks of this magnitude.

One commenter states that maintenance planning can only be done effectively once all details of the work to be accomplished and all downtimes needed to perform the work are known in detail. Therefore, the compliance time should only start once all these details have been clarified.

One commenter states that the proposed AD's do not provide sufficient time for accomplishment of the prototyping effort. Wholesale removal or relocation of wiring not designed for removal in areas where access is difficult can lead to incidental damage even with the best maintenance practices. Given the problems of access, multiple blanket sections will now be required in many fuselage areas to replace a single original blanket. This will lead to new designs, templates, and part numbers. The commenter concludes that this cannot happen in an orderly fashion without completing a prototyping effort on at least one airplane.

The FAA concurs that an extension to the compliance time is warranted. The FAA's intent was that the replacement be conducted during a regularly scheduled maintenance visit for the majority of the affected fleet, when the airplanes would be located at a base where special equipment and trained personnel would be readily available, if necessary. Based on the information supplied by the commenters, the FAA now recognizes that 5 years corresponds more closely to an interval representative of most of the affected operators' normal maintenance schedules. The FAA finds that a 4-year compliance time would have a significant impact on scheduling and cost and might result in hurried accomplishment of the required replacement, which could result in potential damage to associated wiring. This decision is supported by experience from the prototype installations, which demonstrated that the required replacement procedures are complex in some areas, and that adequate time and facilities are necessary to ensure that they are completed safely and correctly. Paragraphs (a) and (c) of the final rule have been revised to reflect a compliance time of 5 years. The FAA does not consider that this extension will adversely affect safety.

One commenter supports the proposed 4-year compliance time for accomplishing the proposed replacement of the MPET insulation blankets. The commenter states that, while some operators feel it is not a practical time period, the proposed compliance time is reasonable and practical to retrofit all of the affected airplanes, utilizing airline and third party maintenance facilities. The commenter also states that it and other materials manufacturers are fully prepared and have the capacity to support this effort. Another commenter states that the proposed 4-year compliance time is a very generous allotment of time and would not want to see the proposed AD's delayed any further.

The commenters did not provide any data to support their position. For the reasons described previously, the FAA finds that a 5-year compliance time is reasonable and practical to retrofit all of the affected airplanes rather than the 4-year compliance time proposed by the original NPRM and supplemental NPRM.

Two commenters request that the compliance time for accomplishing the proposed replacement be shortened. One commenter states that the proposed compliance time of 4 years is too lengthy given the fire hazard introduced by MPET insulation blankets. The second commenter states that quicker action is necessary if the conditions of the wiring on affected airplanes are anything like what was discovered in the 737's emergency grounding issue of May 98, wires found damaged on the Space Shuttle Columbia, or numerous instances of wire insulation failure coming out of the Aging Transport Systems Rulemaking Advisory Committee (ATSRAC)/ASTF inspections (15 service bulletins upgraded to alert status on Model MD–11 series airplanes alone) or alert service bulletins on the 727's.

The FAA does not concur with the commenter's request to shorten the compliance time. As discussed previously, the FAA considered the safety implications, parts availability, and normal maintenance schedules for timely accomplishment of replacement of the MPET insulation blankets. In consideration of all of these factors, the FAA determined that the compliance time, as revised, represents an appropriate interval in which

replacement of the MPET insulation blankets can be accomplished in a timely manner within the fleet and still maintain an adequate level of safety. The FAA encourages operators to accomplish this modification as soon as possible. The commenter points out several incidents associated with airplane wiring. The FAA is addressing these issues as they are identified. The commenter is correct that these wiring incidents are the focus of ATSRAC and ASTF activity. However, these wiring issues are not the subject of this AD.

One commenter requests that the FAA consider a 4-year compliance time to accomplish the proposed replacement only in areas that are readily accessible (*i.e.,* areas where extraordinary means are not required to gain access). The MPET insulation blankets for certain defined areas of the cockpit and electronics bay(s) should not be replaced or should be replaced when those areas are made accessible. The commenter states that replacement of 98 percent of the insulation on the affected airplanes will provide an equivalent level of safety to those airplanes not affected by the proposed AD's. Considerable time will have to be added to the proposed compliance time to accommodate a complete replacement without forcing some airplanes to be grounded due to lack of maintenance capacity.

The FAA does not concur with the commenter's request to require a compliance time of 4 years only for replacement areas that are readily accessible. Although the prototype installations have shown that accomplishment of the required replacement in the cockpit and electronic compartment is physically challenging, potential ignition sources and the identified unsafe condition exist in areas that are not readily accessible. Therefore, the FAA finds that MPET insulation blankets in all areas of the affected airplanes must be replaced. However, as discussed previously, the FAA has extended the compliance time for the required replacement from 4 years to 5 years. While not intended to address the issue of inaccessible areas, the extension of the compliance time by one year should help alleviate the concern for grounding of airplanes due to lack of maintenance capacity.

Two commenters request that the FAA ensure that sufficient insulation material of appropriate quality is available. Supply shortages could create conditions in which the work needs to be performed under time pressure. One commenter notes that there is only one blanket covering material that is currently approved, and only one qualified test apparatus available for operators to perform American Society for Testing and Materials (ASTM) E648 tests on other products. The commenter also notes that the airplane manufacturer has stated that it has only one qualified supplier for manufactured blankets. The commenter is uncertain if the blanket manufacturer can meet replacement demands within the proposed 4-year compliance time. Furthermore, the commenter states that there are no dimensioned drawings available to 14 CFR part 121 operators who might plan to fabricate their own blankets. Templates must be plotted and obtained from the airplane manufacturer, which is a time consuming process.

Various insulation blanket material suppliers state that there is no cause for concern over the availability of the materials specified in the proposed AD's. Metallized Tedlar™ (*i.e.,* polyvinylfluoride), polyimide film, Tedlar™ and polyimide tapes, and fiberglass are abundant and are readily accessible to support all retrofit requirements.

The FAA has assessed the availability of materials required by this AD and has determined that required materials and manufacturing sources should be available for modification of the U.S. fleet within the 5-year compliance time. The FAA encourages operators to review their airplanes to assess their individual needs for materials and plan accordingly. The FAA anticipates that operators will accomplish the requirements of this AD at the earliest practicable maintenance opportunity to lessen the burden toward the end of the compliance time. In addition, the airplane manufacturer is preparing installation kits that can be utilized to accomplish the required replacement. Also, operators and modifiers have developed and are continuing to develop their own data (templates and drawings) to accomplish this required replacement. While this may be a time consuming process for some, it can be accomplished.

Inadequate Procedures and Information in Referenced Service Bulletins

Several commenters state that the replacement procedures and information specified in the referenced service bulletins (*i.e.,* McDonnell Douglas Service Bulletins MD–90–25–015, Revision 01, dated November 5, 1997; MD80–25–355, Revision 01, dated November 5, 1997; DC10–25–368, dated October 31, 1997; and MD11–25–200, Revision 01, dated March 20, 1998) are inadequate for reasons discussed below.

Several commenters state that the Accomplishment Instructions of the referenced service bulletins address the fabrication of insulation blankets but provide no instructions for installation. Detailed instructions for installation are essential to avoid risks during installation, particularly in crucial areas where wiring or other systems are densely concentrated. Damage to installed systems can result in latent failures of critical flight systems and generation of electrical ignition sources. The unprecedented scope of the work involved in moving and replacing wires and systems, and the fact that nothing similar has ever been attempted, introduce a new and unquantified amount of risk.

One commenter states that Boeing has acknowledged that instructions to remove and reinstall some equipment racks and related structures, which are necessary to accomplish the proposed replacement, do not exist in current maintenance documents and will need to be developed. Specific aspects of the proposed replacement are beyond the scope of any currently authorized maintenance procedures. The members of the Boeing Recovery and Modification (RAM) Team are the only personnel trained and authorized to disassemble and reassemble certain critical areas. Several commenters state that Boeing is planning to issue revised service bulletins around June 2000. One commenter states that Boeing should issue detailed service bulletins to cover the scope of the NPRM's and all related test criteria and requirements associated with insulation blanket replacement and removal/installation of associated equipment/components. One commenter states that the service bulletins should be revised to include the above information.

The FAA acknowledges that the instructions appear to be generic, without reference to specific locations in the airplane. However, it is still possible to complete the replacement required by this AD by developing the necessary installation data in conjunction with existing maintenance procedures. Since the issuance of the NPRM's, the manufacturer, in conjunction with operators, has completed prototype installations. Based on the results of the prototype, the manufacturer is developing revisions to the referenced service bulletins that will contain additional installation information and instructions. These revised service bulletins are scheduled for completion in June 2000. Any new or revised service bulletins will contain procedures to maintain/test the integrity

of the wiring after accomplishment of the replacement of any MPET insulation blanket. The FAA is planning to review and approve the revised service bulletins under the AMOC provision of paragraph (e) of the final rule.

In addition, the FAA is aware that certain operators and modifiers are developing their own installation data. The FAA may approve requests for an AMOC under the provisions of paragraph (e) of this AD if sufficient data are submitted to substantiate that such a design change would provide an acceptable level of safety.

The FAA does not concur with the commenter that the members of the Boeing RAM team are the only personnel that can address certain areas of the airplane. The FAA finds that many operators have the expertise to accomplish the required replacement. In addition, Boeing intends to include the necessary instructions in the revised service bulletins.

Several commenters state that the referenced service bulletins not only refer to materials tested in accordance with Standard Test Method ASTM E648 and approved by the FAA as a method of compliance with the requirements of the proposed AD, but also refer to materials that do not meet the new requirements. Moreover, other materials acceptable for compliance with the requirements of the proposed AD are not listed in the referenced service bulletins.

The FAA concurs that the referenced service bulletins refer to materials that do not meet the requirements of this AD. When the referenced service bulletins specified in the NPRM's were issued in 1997, the insulation blanket film material listed in those service bulletins were considered acceptable for installation. Since the issuance of those service bulletins, however, only one of the two metallized Tedlar™ covers specified in the referenced service bulletins has been demonstrated to be acceptable for compliance with the replacement requirements of paragraph (c) of this AD (as indicated in NOTE 4 of the AD) based on flammability testing using the criteria specified in the final rule. The revised service bulletins will only list material that has been approved by the FAA. Under the provisions of paragraph (c) of this AD, the FAA may approve other film material that is shown to meet the flammability test method specified in the final rule. Also, under the provisions of paragraph (e) of this AD, the FAA may approve requests for approval of an AMOC for insulation blankets other than those specified in the service bulletins referenced in the final rule that are shown to meet the flammability test method specified in the final rule and all other airworthiness regulations.

Several commenters state that, due to age, identification stamps on the MPET insulation blankets may be unreadable. The referenced service bulletins are missing instructions for determining whether such blankets are constructed of MPET.

Although the referenced service bulletins are missing instructions for determining whether insulation blankets are constructed of MPET, the FAA finds that such a determination can be made without such instructions. MPET insulation blankets are extremely shiny when compared to all other insulation blanket cover material, and can be readily recognized by trained maintenance personnel. It is also possible to use known MPET material as a comparison sample to assist in the identification should the markings not be readable. Paragraph (a) of the final rule has been revised to clarify the method of identifying MPET. MPET insulation blankets can be identified by the following markings: (1) DMS 2072, Type 2, Class 1, Grade A; (2) DMS 2072, Type 2, Class 1, or (3) DMS 1996, Type 1. The FAA has revised NOTE 2 of the final rule to clarify these markings.

Several commenters state that the referenced service bulletins specify the least effective method for the fabrication of new insulation blankets. Few operators are equipped or have the capability or capacity to manufacture their own blankets. Four sources of insulation blankets were evaluated in technical meetings with the manufacturer. Of these four sources, operators viewed blankets provided in kits by the manufacturer as the most efficient and practical. Such kits would facilitate the earliest completion date of a replacement program, would preserve the thermoacoustic characteristics of insulation systems and certificated configuration of affected airplanes, and can be supported according to the manufacturer. In addition, no dimensional blanket drawings and templates for making the blankets are available.

Although the method for fabrication of new insulation blankets specified in the referenced service bulletins may not be the most efficient method for the commenters, the FAA finds that it is possible to develop the necessary data to manufacture blankets in accordance with the instructions of the referenced service bulletins. The FAA is aware that Boeing is developing replacement kits. The information necessary to purchase these kits will be included in the revised service bulletins (as discussed previously). However, the revised service bulletins are not scheduled to be completed until June 2000. The FAA has decided not to delay this action in anticipation of the service bulletins, since the release date is not absolute and this action is necessary to address an identified unsafe condition. Therefore, the FAA may approve requests for an AMOC under the provisions of paragraph (e) of this AD once the revised bulletins are issued.

In addition, the FAA acknowledges that templates may not be available for operators to make new insulation blankets. However, the referenced service bulletins do describe procedures for removing the subject insulation blankets and using those blankets as templates for making new insulation blankets. While some operators may not be equipped or may decide not to manufacture the replacement blankets, there are adequate resources available in the industry to accomplish the manufacturing.

Several commenters state that the referenced service bulletins provide no labor estimates. One commenter states that it is not aware of any large transport category airplane that has been removed from service, has had its insulation replaced, and has been returned to service. This lack of experience and labor estimates from the manufacturer would impair the planning required of operators and their ability to provide accurate comments to the proposed AD's.

The FAA does not concur. The FAA acknowledges that the referenced service bulletins do not provide labor estimates. However, as indicated under the heading ''Regulatory Evaluation Summary'' in the preamble of the NPRM's and supplemental NPRM's, a Preliminary Cost Analysis and Initial Regulatory Flexibility Analysis to determine the regulatory impacts of the proposed AD's were included in the Rules Docket No.'s 99–NM–161–AD and 99–NM–162–AD. A summary of those analyses was contained under that same heading in the preamble of the NPRM's and supplemental NPRM's. In addition, the manufacturer, operators, and modifiers have developed estimates based on the prototype installations completed to date. (The FAA discusses the comments to the cost estimate of the proposed AD's in more detail, below, under the heading ''Regulatory Evaluation Summary.'')

In response to the original NPRM's, several commenters state that the manufacturer has indicated that the airplane effectivity in the referenced service bulletins is currently being re-

evaluated and may be revised substantially. This lack of accurate airplane effectivity also would impair the planning required of operators and their ability to provide accurate comments.

The FAA concurs that the effectivity listed in the service bulletins is not correct. As indicated under the heading ''Differences Between the Proposed AD and Service Bulletins'' in the preamble of the NPRM's, the FAA realizes that the effectivity listing of the referenced service bulletins not only includes airplanes manufactured with MPET insulation blankets, but airplanes equipped with other materials that are much more difficult to ignite than MPET. The FAA has determined that only airplanes manufactured with MPET insulation blankets are subject to the identified unsafe condition. Therefore, paragraph (a) of the AD's requires that a determination be made of whether, and at what locations, MPET insulation blankets are installed. In addition, the applicability specified in the final rules, based on the supplemental NPRM's, includes fewer airplanes than specified in the service bulletins. In addition, the applicability statement of the final rule, Rules Docket No. 99-NM–162-AD, has been revised to clarify the airplanes that are subject to the identified unsafe condition, which is discussed below, under the heading ''Revise Applicability of Proposed AD.''

Several commenters state that some accessibility issues have not been addressed. One commenter requests that the removal/replacement requirements be re-evaluated to exclude replacement insulation blankets in those ''inaccessible places'' of the airplanes. Three to four percent of the MPET insulation blankets are buried beneath structure and wiring in areas like the electrical and equipment (EE) bay and the flight deck and will require as much as 70 percent of the total man hours to replace.

The FAA does not concur that replacement of MPET insulation blankets should not be required in ''inaccessible'' areas. The areas identified by the commenters (*i.e.,* the EE bay and flight deck) are areas where potential ignition sources (*i.e.*, electrical arcing) are likely to exist and are, therefore, susceptible to the identified unsafe condition. During the prototype exercises and subsequent inspections of the EE bay and flight deck, the FAA learned that most Model DC–9–80 and MD–90–30 series airplanes do not have MPET insulation blankets in these areas. It is, however, the operator's responsibility, as required by paragraph (a) of this AD, to determine whether, and at what locations, MPET insulation blankets are installed in each airplane. Therefore, contrary to the commenters' assertion, the total labor costs associated with replacement of the MPET insulation blankets in the EE bay and flight deck will not be the most significant portion of the total cost of the AD.

One commenter requests that the FAA revise the proposed AD to incorporate specific references to industry guidance material on wire inspection and disturbance. As a minimum, such references should include Advisory Circular 25–16, ''Electrical Fault and Fire Protection and Prevention.''

The FAA does not concur. Operators and modifiers should be aware of the existing guidance and the revised service bulletin instructions (discussed above), which, based on the prototyping that has been accomplished, will specify wiring inspection information that may be needed.

One commenter requests that the FAA develop and require post-modification wiring inspections to verify the integrity of the wiring insulation. The FAA concurs that any damage done to wiring or other components in the course of the required replacement needs to be corrected. In fact, if maintenance personnel are aware of damage, whether or not caused by replacement of the MPET insulation blankets, they are obligated to document it and initiate appropriate corrective action. Operators are required by 14 CFR parts 91, 121, and 135 to maintain their airplanes in an airworthy condition after any alteration or repairs are made to the airplane. Also, based on the prototyping that has been accomplished, the revised service bulletins will provide any specific wire integrity inspection that may be needed. Therefore, no change to the final rule is necessary.

Coordination With Wiring AD's

Several commenters state that they understand that other NPRM's are in the development phases, which would require inspection of airplane wiring, and would deal with the same issues that have brought about the subject proposed AD's. Some of these commenters state that these NPRM's should not be developed, mandated, and undertaken separately, but rather should be part of a carefully thought out and coordinated process and program. A properly developed plan must consider that each time such disruption of airplane wires/systems takes place, there is an increasing opportunity for collateral damage to those wire/systems with unknown future safety implications. Such a plan also should recognize that the insulation proposed to be changed is not really the source of any fire problem and that proper rectification of the issues being considered might better lie in a carefully thought out and researched wiring AD. One commenter states that it would be efficient to combine the requirements of the proposed AD's with the wiring requirements that will be proposed soon. One commenter states that Boeing is developing several service bulletins dedicated to the inspection and maintenance of airplane wiring. However, these service bulletins will not be available in time to coincide with the insulation blanket replacement should the current NPRM's, with their proposed timing, become law.

The FAA does not concur that AD's addressing specific unsafe wiring conditions should necessarily provide for compliance times that are concurrent with this AD. In some cases, the corrective actions for those unsafe conditions are simple maintenance actions that can be accomplished quickly. It would be inappropriate to allow those unsafe conditions to continue during the extended compliance time allowed by this AD. The FAA does concur that any AD's addressing general wiring inspections for unsafe conditions would be best accomplished in conjunction with the replacement of MPET insulation blankets in affected areas. Such coordinated actions would certainly be most efficient for operators. The FAA does not concur with the commenters' request to combine the requirements of this AD with any proposed actions to address general wiring issues. Such action may delay correction of the unsafe condition of this AD by extending the compliance time further. The FAA will take into consideration the compliance time of this AD in any future action for general wiring inspection to minimize the duplication of aircraft downtime associated with accomplishing the actions of this AD.

Revise Applicability of Proposed AD

One commenter notes that paragraph (a) of the proposed AD states ''* * * determine whether, and at what locations, insulation blankets constructed of MPET are installed. This determination shall be made in a manner approved by the FAA.'' The commenter states that this wording is very unclear to operators and that the FAA should coordinate with Boeing to determine more precisely what the applicable airplanes are.

Based on the commenter's statement that ''the FAA should coordinate with Boeing to determine more precisely

what the applicable airplanes are,'' the FAA finds that clarification is necessary. After inspecting in-service airplanes, the FAA has determined that all affected airplanes may not have MPET insulation blankets throughout the fuselage. Some airplanes may have very little MPET insulation blankets installed and others may have 100 percent installed. The FAA also has determined that, based on the manufacturer's records alone, it is not possible to determine precisely the configuration of each individual airplane. Therefore, paragraph (a) of the final rule requires that operators determine whether, and at what locations, insulation blankets constructed of MPET are installed. If MPET insulation blankets are not installed, no further action is required by this AD.

The manufacturer states that it is continuing to verify the actual extent of MPET-covered insulation on airplanes delivered from the factory. In response to the original NPRM's, the manufacturer states that additional Model DC–9–87 (MD–87), DC–10, and MD–11 series airplanes, and KC–10A (military) airplanes need to be included in the applicability of the NPRM's, and at least some Model DC–9 series airplanes should be excluded. When that effort is complete, the manufacturer states that it will issue new service bulletin information. One commenter states that the applicability statement of NPRM, Rules Docket No. 99–NM–162–AD, is incorrect. The commenter states that the manufacturer has indicated that MPET insulation blankets were used on Model DC–10 series airplanes, fuselage numbers 359 through 381 inclusive, and 432 through 436 inclusive, and Model MD–11 series airplanes, fuselage numbers 447 through 602 inclusive. In addition, MPET insulation blankets were used on ducting installed in Model MD–11 series airplanes, fuselage numbers 603 through 632 inclusive.

The FAA acknowledges that the applicability statement of the original NPRM's was incorrect. Following the issuance of the NPRM's, the FAA identified additional airplanes that were subject to the identified unsafe condition and issued supplemental NPRM's to reopen the comment period to provide additional opportunity for public comment. The applicability statement of the supplemental NPRM's included the fuselage numbers of the airplanes the commenter referred to above.

One commenter states that the applicability statement of supplemental NPRM, Rules Docket No. 99–NM–162–AD, is incomplete. The commenter notes that it operates four Model DC–10–15 series airplanes, three of which fall within fuselage numbers 359 through 632 inclusive (*i.e.,* fuselage numbers 362, 365, and 374), which were manufactured between June 1981 and January 1982. The commenter requests that the applicability statement of the supplemental NPRM be revised to include Model DC–10–15 series airplanes. The FAA concurs. The applicability statement of the subject supplemental NPRM correctly references the specific manufacturer's fuselage numbers of all affected airplanes, including those fuselage numbers for Model DC–10–15 series airplanes. Therefore, the FAA finds that it is necessary to revise the applicability statement of the subject final rule to include all affected series of Model DC–10 airplanes, specifically Model DC–10–10F, DC–10–15, and DC–10–40 series airplanes.

One commenter requests that the applicability of NPRM, Rules Docket No. 99–NM–161–AD, be revised to ''[m]anufacturer's fuselage number 1011 through 2241 inclusive; certified in common carriage operations.'' The commenter states that private operators were not considered when studying the effects of the proposed AD's. Private operators who operate under 14 CFR 91.501 need to be separately considered when they are faced with rules that are directed at air carriers. Transport category ''Private Carriage'' operators, who operate under 14 CFR 91.501, are part of the general aviation population and do not offer service to the public or a segment of the public. General aviation operators' airplanes are not held (and are not expected to be held) accountable to the same regulation standards as ''Common Carriage'' operators. The commenter also states that significant differences in airplane utilization, interior, and operation make the likelihood of in-flight fire threat due to MPET insulation blankets on ''Private Carriage'' airplanes extremely remote. Therefore, the exclusion of ''Private Carriage'' airplanes from the applicability of this NPRM would not jeopardize public interest.

The FAA does not concur with the commenter's request to revise the applicability of the subject rule as stated. The identified unsafe condition and potential consequences addressed by this AD are not any different for airplanes utilized in private operation versus ones operated in common carriage.

One commenter states that the proposed AD's do not address affected airplanes outside the noted applicability that may have been retrofitted with MPET insulation blankets during service. This implies that the FAA's investigation has determined that small amounts of MPET on those airplanes do not pose an unsafe condition.

Regarding post-delivery installation of MPET, the FAA does consider that such insulation is unsafe. Most operators do not retain records identifying on what airplanes such insulation has been installed. Therefore, to address this unsafe condition, an AD would have to require that all operators inspect all airplanes of any type to identify the relatively small amount of such insulation that may have been installed during post-production maintenance. The FAA does not consider that such a requirement would be practical or cost effective. However, as with any other unsafe condition, when an operator becomes aware that MPET insulation blankets have been installed, the material should be removed to maintain the airplane in an airworthy condition.

Flammability Test Method Not Adequately Developed/Defined

Several commenters state that the proposed test method seems insufficiently developed to be considered the new standard flammability test. The commenters addressed several issues, including:

- The validity of the test method;
- Qualification of the test method;
- Details of the test procedures; and
- Materials and approval process.

Validity of Test Method

One commenter notes that it has built a test unit and conducted tests on it. The commenter has verified the results of the FAA Technical Center tests, but believes there are serious limitations on this test's utility for predicting how insulation coverings will burn when in place on an airplane. In addition, the commenter states that the mechanism by which films can pass the Radiant Panel Test is for the material to shrink away from the heat source. Other materials, such as polyimide film, pass the Radiant Panel Test by not igniting and shrinking away from the heat source. Two other commenters state that the best of Tedlar™ and Mylar™ (*i.e.,* 3 polyethyleneteraphthalate) films shrink away in the presence of flame and are no help at all in containing fire. The Tedlar™ material that passes the test shrinks away from the heat source before the ignition source can be applied to the surface of the test material. Thus, there is no material to ignite. The commenter states that the Radiant Panel Test may not replicate the condition on an airplane where blankets

are restrained and multiple layers are often part of the blanket construction.

The commenter further states that it is possible for polyethyleneteraphthalate (PET), MPET, or other plastics that are more combustible than Tedlar™ to pass ASTM E648, if treated to have desirable heat shrink characteristics. The only other requirement for insulation coverings is the 12-sec vertical burn, which is recognized as inadequate because MPET materials can pass it. The commenter notes that the proposed standard may leave the door open in the future for combustible materials to be installed on airplanes.

The FAA does not concur with the commenter's statement that films can pass the Radiant Panel Test by shrinking away from the heat source and are no help in containing a fire. The purpose of the test is to establish the flame spread characteristics of insulation blanket materials under realistic conditions. The results of this test have been correlated with full-scale testing, conducted by the FAA Technical Center, in which insulation was installed in fuselage sections in a representative fashion. Certain materials that shrink when exposed to heat have been shown to prevent propagation of a fire. In addition, for these same reasons, the FAA does not concur with the commenter that the FAA Technical Center tests have serious limitations. The FAA finds that the insulation material tested in accordance with the method specified in the AD will have much better flame spread characteristics than MPET, which was shown to comply with the current Bunsen Burner Test specified in the regulations, and subsequently, determined to have unsafe flame spread characteristics when ignited from a small ignition source.

One commenter states that the best situation is to have insulation covering film that does not burn in the Radiant Panel Test. The commenter contends that the test should screen out material that does not perform as well as polyimide film.

The FAA does not concur that the test method must screen out materials that do not perform as well as polyimide films. As discussed previously, materials, including polyimide films, that pass the Radiant Panel Test perform much better in full-scale testing than MPET insulation blankets that are the subject of this AD.

Qualification of the Test Method

One commenter expresses concern that the FAA has not yet published updated flammability standards that will allow for the development and testing of materials other than those cited in previous McDonnell Douglas service bulletins, which specify the replacement of MPET with two types of metallized Tedlar™. The commenter notes that the FAA has approved only one type of specified metallized Tedlar™ after it successfully passed an ASTM flame spread test. The commenter emphasizes that it is urgent that the FAA provide its own applicable test standard to facilitate the rapid replacement of MPET with other materials that will have superior fire resistant characteristics.

One commenter requests that the FAA revise the proposed AD's to ''more clearly require the FAA Radiant Panel Test, which was derived from ASTM E648,'' and to define the test before approving specific films. The commenter states that ASTM E648 is much different than the Radiant Panel Test developed by the FAA Technical Center. The Radiant Panel Test uses the same enclosure, a radiant panel, and the same basic concept as the ASTM E648 test. However, the Radiant Panel Test has had several modifications including a different heat flux, different ignition source, and a modified sample holder. The commenter notes that results of the Radiant Panel Test vary widely when test specifications are changed. Therefore, the specification of any film as passing the test prior to the completion of the test method is not warranted. It is possible for films that currently fail the existing test to pass when the test procedures or chamber is fully defined. Conversely, films that currently pass the test can fail.

One commenter states that industry experts should discuss the success criteria of ASTM E648 further. This commenter notes that these changes to the standard and success criteria have not been subject to round robin testing and outside peer review, so various aspects of their merit are questionable. One commenter suggests that round robin testing with clearly identifiable/achievable pass/fail criteria be performed by the industry to validate the repeatability of the test procedures prior to release of the proposed AD's. Validated criteria would produce an equivalent level of safety to material currently in production and in use in the fleet, which is deemed acceptable.

The FAA concurs with the commenters concerning the reference to ASTM E648 in the NPRM's and finds that clarification is necessary. The FAA has been developing for some time new flammability standards for insulation material. Research has been conducted on the various types of insulation material to determine their effectiveness on both flame spread and fuselage burnthrough. As a result, the FAA has developed a new flame spread test method. The flame spread test method specified in this AD is a modified version of the ASTM E648 flammability standard and test apparatus. Modifications to ASTM E648 test apparatus have been made to more closely reflect the fire conditions in an airplane environment. The FAA has prepared a document to reflect the flame spread test method to be used for testing of replacement insulation blankets for this AD. It is identified as ''Test Method to Determine the Flame Spread Characteristics of Thermal/Acoustic Insulation Material for Replacement of MPET.'' For the purposes of correcting the identified unsafe condition of this AD, the FAA finds that this flame spread test method is sufficiently developed.

The FAA also has developed a procedure for utilizing the FAA Technical Center flame spread test apparatus to qualify materials for this AD. The procedure for utilizing the test apparatus of the FAA Technical Center is identified as ''Ground Rules for Use of Technical Center Facility for Testing.''

The flame spread test method and procedure for using the FAA Technical Center test apparatus are both included in Appendix 1 of this AD.

As paragraph (c) of the NPRM's is currently worded, some commenters may misinterpret that the replacement insulation blankets must be constructed of materials tested in accordance with the original ASTM E648 flammability standard, rather than tested in accordance with a new flame spread test using an apparatus derived from ASTM E648 in accordance with a method approved by the FAA. Paragraph (c) of the final rules has been revised to clarify the flame spread test method for replacement insulation blankets. The Los Angeles Aircraft Certification Office (ACO) will work closely with other FAA ACO's and the FAA Technical Center to assist operators/modifiers in qualifying new materials for compliance with the requirements of this AD.

The FAA concurs that the method specified is not yet a ''standard.'' However, the method is sufficiently developed for this AD and, before adoption as a standard, will undergo the kind of industry qualification proposed by one commenter. The FAA partially concurs with the commenter's statement that round robin testing is necessary and that the success criteria of the flame spread test method should be discussed further. Prior to incorporation of a new flame spread test method into the

Airworthiness Standards for transport category airplanes (14 CFR part 25), the test method will be subject to round robin testing. In fact, this process is currently underway within the International Aircraft Materials Fire Test Working Group.

With respect to changes in the flame spread test method that may cause certain materials to go from acceptable to unacceptable, or vice versa, the FAA does not agree that this is an issue. Refinements to the test method will be made to improve the repeatability of the test, not to change the test results. Materials that are marginal will perform marginally regardless of the details of the method.

One commenter states that it understands that the FAA has plans to replace the standard gas-fired radiant panel with an electric panel, and that the flame ignition source is a single cone non-standard burner as opposed to the T-type burner method specified in ASTM E648. The commenter contends that differences between the FAA method and ASTM E648 are confusing to both testing labs wishing to provide services to FAA-regulated clients as well as suppliers of insulation who are unclear as to what the specification will be for the products they produce for the aerospace industry. The commenter states that ''specification of a non-standard test apparatus and conditions by the FAA end up creating a whole other set of devices which must be fabricated and maintained separately from their standard 'parent devices' removing the economic benefits which use of consensus developed public sector standards provide.''

The FAA does not concur for the reasons noted previously. In addition, since the apparatus specified is not used for any other aviation application, there is very little potential for confusion. The number of facilities currently equipped to conduct these tests is extremely small, which further diminishes any problems associated with differences in the test method.

One commenter states that, because of such a tremendously costly retrofit program, all further developments with regard to new testing methods must clearly avoid duplication or contradiction of actions as described in the proposed AD's.

The FAA has revised paragraph (c) of the final rule to clarify the flame spread test method to be used to qualify replacement insulation blankets. As previously discussed, this test method is adequately refined to qualify these materials for this AD.

Details of the Test Procedures

One commenter states that results of tests have shown that the thickness of the insulation has no impact on the performance of the film under test. Therefore, the commenter suggests that all samples be tested with two-inch thick insulation.

One commenter requests that the FAA develop specifications for environmental conditioning of samples since the absence of such requirements will significantly alter test results, in particular for ignition and flame spread sensitive materials such as faced insulation.

The commenter states that the proposed pass/fail criteria, including the minimum 2-inch burn length and 0 flame spread, are not easily measured or agreed upon. Several commenters state that clearer pass/fail criteria are needed. One commenter states that subjective assessment of test results in small scale fire testing is a constant, ongoing problem that should be avoided.

One commenter claims that the ''pilot'' burner arrangement called out in the FAA specification does not result in reproducible test results. Likewise, the ''pre-heat'' time between specimens and the time between sample insertion and flame application have not been defined. The commenter prefers a standard design and operation conditions and is unclear why the standard design has been modified.

The FAA does not agree that the current test method lacks reproducibility. Tests conducted at the FAA Technical Center and at other facilities indicate that the test is reproducible and repeatable. The FAA concurs with the commenter that a defined test protocol should be used when testing replacement material. The flame spread test method specified in the final rule does include the pass/fail criteria, environmental conditioning, and test specimen thickness. Issues such as the pilot burner arrangement will be the subject of further refinement before the test method is adopted as a regulatory standard, but are adequately defined for this AD.

One commenter requests that the test procedures include contaminated insulation blankets to simulate real world conditions. The commenter states that testing of pristine material may not provide sufficient assurance when within a few years the thermal blankets will be contaminated with solvents and other material. The FAA does not concur. While ''contamination'' might result in either detrimental or improved flammability performance, incorporation of generic ''contamination'' into a test requirement is not practical. Contamination is usually a localized phenomenon, and not spread uniformly throughout the airplane. Replacing the existing materials with materials that will not propagate a fire will confine a fire to the area of contamination and should prevent the fire from becoming a hazard. As with any material installed on an airplane, it is the operator's responsibility to ensure that the airplane remains in an airworthy condition.

The commenter further requests that the test procedures include ignition ''by these so-called, otherwise harmless electrical arcs.''' The commenter states that the likelihood of thermal blankets propagating a fire will typically start with an electrical arc. Therefore, the resistance to an arc-tracking Kapton™ (*i.e.,* polyimide) wire fire should be assessed. The commenter contends that this will give a clear indication of what the next flight crew might experience, rather than a Bunsen Burner or cotton swab test that doesn't relate to the real world conditions found on affected airplanes.

The FAA does not concur with the commenter's request to include electrical arcing ignition in the test procedures. Electrical arc tests were used to identify the unsafe characteristics of MPET in the course of research. The test method required by this AD is, in fact, a more severe measure of the materials' performance. There are materials that are not susceptible to ignition by electrical arcing that will not pass the test required by this AD. Therefore, the replacement of MPET insulation blankets in accordance with this AD will address the commenter's concern.

Approved Materials

Two commenters request that the FAA revise the proposed AD's to include an expanded list of approved films. Several commenters note that Kapton™ film installed 25 years ago on Model L–1011 series airplanes has proven to outperform Tedlar™ and Mylar™ films in FAA tests, which measure the materials' ability to hold back flames. Two commenters state that all FAA testing, including burnthrough testing, have shown polyimide films to be superior. In addition, FAA Administrator, Jane Garvey, specifically mentioned Kapton™ film as being a material that would be ''grandfathered in'' in an October 14, 1998, announcement.

Two commenters state that the proposed AD's appear to preclude the use of polyimide (Kapton™) insulation

covering film that has passed the new Radiant Panel Test.

The FAA does not concur with the commenters' request to revise NOTE 4 of the AD to include additional films. Except for the metallized Tedlar™ cover mentioned in NOTE 4 of the AD, currently, no other film has successfully passed the flammability testing in a manner approved by the Manager, Los Angeles ACO. However, the FAA is aware of various film materials that could be found to be acceptable replacement materials for MPET. Once these materials have successfully passed the flammability testing specified in the AD, they must be approved by the Manager, Los Angeles ACO. In addition to the flammability requirements, the material must be shown to meet all other applicable airworthiness requirements. The FAA Administrator did make an announcement in October 1998 that Kapton™ would be ''grandfathered,'' and that the FAA would not require that material to be replaced once is was installed. However, that announcement was made prior to the issuance of the NPRM for this final rule. This AD does NOT require Kapton™ to be replaced once it is installed; however, it does require testing and approval of any material, including Kapton™.

One commenter requests that the FAA revise NOTE 4 of the proposed AD's to read ''[t]he metallized Tedlar covers specified in the service bulletins must be tested to demonstrate compliance with the requirements of paragraph (c) of this AD.'' The commenter disagrees with the characterization that a particular cover material is considered acceptable with the requirements of paragraph (c) of the proposed AD's. The commenter states that the Thermal Acoustic Task Group, which was organized by the Fire (Safety) Test Branch of the FAA Technical Center to develop the new flammability requirements, did not begin to discuss the procedures for demonstrating compliance until a seminar was held on September 13 and 14, 1999. Because the release date of the NPRM's was before the seminar, no material could have been specified to be in compliance with the requirements of paragraph (c) of the NPRM's. The commenter states that, at the time of publication of the proposed AD's, compliance materials and methods had not yet been submitted under a Test Plan, conformity inspection of samples had not been completed, and properly witnessed testing had not taken place.

The FAA does not concur with the commenter's request to revise NOTE 4 of the AD as it suggests. The material that is listed in the service bulletins has been found acceptable by the FAA and was tested at the FAA Technical Center in a manner approved by the FAA, prior to the September seminar. The purpose of the seminar was not to develop test methods, but to introduce the method to the interested segment of the industry. Therefore, the timing of the seminar has no bearing on the approval status of the material. No change to the final rule is necessary.

Replacement Material Approval Process

One commenter notes that under the heading ''Differences Between the Proposed AD and Service Bulletins'' in the preamble of the NPRM's, it states ''* * * Only one of the two insulation blanket film materials specified in the service bulletins has successfully passed the testing of the ASTM flammability standard and has been found to be an acceptable replacement material for the MPET-covered insulation blankets. Other film material, such as certain polyimide and fluoropolymer composites, also have been successfully tested to ASTM E648 and could be found to be acceptable for compliance with the requirements of this proposed AD if presented to the FAA for approval. These materials are not listed in the service bulletins described previously.'' The commenter claims that the original equipment manufacturer (OEM) and certain operators are interpreting this statement as requiring a full Part Manufacturing Approval (PMA) and Supplemental Type Certificate (STC) approval process for blankets using films not in the referenced McDonnell Douglas service bulletins.

One commenter states that other new materials besides Kapton™ will become available in the near future for use as insulation coverings, and that the PMA/STC process is not designed for nor suited for purely materials testing. The commenter contends that using this process would add a great deal of unnecessary cost to the current approval process for new materials. Another commenter requests that the proposed AD be revised to include language describing a clear and abbreviated approval process for blankets utilizing new and less flammable materials.

The FAA does not concur with the commenter's request to include language describing the process for approval of replacement insulation blankets utilizing new and less flammable materials. The FAA approval process of replacing materials/installations is well established and known. Design approval can be obtained by an STC or PMA. It is the responsibility of the operators and modifiers to obtain such approvals for any proposed materials under paragraph (c) of the AD. The FAA may approve requests for AMOC's, such as alternative blanket installation, under the provisions of paragraph (e) of this AD if sufficient data are submitted to substantiate that such a design change would provide an acceptable level of safety.

The FAA has determined that an adequate supply of approved replacement materials will be available to comply with this AD in the time specified. Operators that choose to develop new or different materials must plan accordingly and obtain approval as previously stated. While the PMA or STC process may not seem to be cost effective for some operators, it is the proper approval method to assure all airworthiness standards are met.

Insulation Material on Other Aircraft

One commenter is not clear if the material used today on other Boeing airplanes is able to pass ASTM E648. The same commenter also states that the proposed AD's require full replacement of only MPET. The commenter is not clear what the rationale behind this decision is.

As discussed in the NPRM's, these AD's are intended to correct an unsafe condition by replacing MPET insulation blankets. MPET film differs from other films in use in that it is susceptible to propagation of a fire from a small ignition source. Other films, while not necessarily meeting the proposed test requirements, do not have this susceptibility. It is the susceptibility to small ignition sources that creates the unsafe condition. New standards for insulation materials in general may be similar to the requirements of this AD, but will be used to upgrade the level of safety, and not correct an unsafe condition.

Burnthrough

Several commenters request that the FAA revise the proposed AD's to make clear that airlines are permitted to install insulation that meets a burnthrough protection standard. Two commenters state that the proposed AD's appear to preclude the use of Curlon as a substitute for fiberglass to achieve burnthrough performance. One commenter states that Curlon material and many other materials recently developed could easily and economically provide double the level of protection of the current burnthrough time (*i.e.*, four minutes). Although the proposed AD's do not address the

burnthrough safety threat, the commenters want to take this opportunity to achieve this important safety advance when replacing the insulation. The commenters reemphasize that this would simply be reinforcing the October 1998 announcement that Curlon would be one of the materials ''grandfathered in,'' if operators proceeded to install it voluntarily.

Two commenters request that the FAA revise the proposed AD's to include requirements for burnthrough protection from fuel fires on the ground for all affected airplanes. The commenters state that replacement of flammable insulation is an opportunity to install burnthrough protection. One commenter states that this should be the time to push the industry, as was done with the heat release requirements for interior materials a few years ago. Materials were not even available to meet the new FAA requirements, but the industry ''stepped up to the plate and we now are all safer as a result of this proactive approach.''

The FAA does not concur with the commenters' requests to include burnthrough requirements in the AD. While burnthrough protection is important to the overall fire resistance of airplanes following an accident, the actions required by this AD are intended to correct a known unsafe condition—insulation blankets constructed of MPET. The FAA does not consider that the degree of burnthrough protection provided by currently installed insulation constitutes an unsafe condition. Therefore, it would be inappropriate to issue an AD to require improvement in burnthrough protection. The new replacement insulation blankets required by this AD meet the test method specified in the final rule, correct the identified unsafe condition, and provide the level of safety required by 14 CFR part 25. The FAA encourages the installation of materials that meet additional standards such as fuselage burnthrough protection.

Trade Names

One commenter opposes the use of trade names in both the preamble and regulatory text of the proposed AD's and considers such references to trade names highly prejudicial to Chemfab, the manufacturer of Chemfilm. The commenter states that there is no need for brand name product identification and that this connotes not only FAA approval of, but also preference for, the identified product brand. Once the official ''seal of approval'' has been granted through the rulemaking process, other market entrants face a significant barrier in gaining customer acceptance simply because the identified product has been ''officially'' sanctioned.

Because of the publication and circulation of the proposed AD's, two commenters request that the FAA revise the proposed AD's to identify the manufacturer(s) and trade names of insulation blanket covering films that have met FAA requirements specified in the proposed AD's.

The FAA does not concur with the commenters' request to reference other trade name products in the final rules or to eliminate all references. Tedlar™ and Mylar™ are common trade names and this is the clearest way for FAA to communicate with affected operators. Except for the one metallized Tedlar™ cover mentioned in NOTE 4 of the AD, currently, no other film has been approved by the Manager, Los Angeles ACO. In addition, the airplane manufacturer is planning to list materials, once they have been tested and approved by the FAA, in the revised service bulletins (discussed previously under the heading ''Inadequate Procedures and Information in Referenced Service Bulletin''). Furthermore, the FAA finds that trade names such as of Mylar™, Kapton™, and Tedlar™ are well known and are accepted terminology in industry. The reference of these trade names in the AD's are not, in any way, an FAA endorsement of those products. Therefore, no change to the final rule is necessary.

Wiring

One commenter requests that flammability requirements for the sources of ignition (*i.e.,* the wiring) for thermal blanket fires be stricter than the requirements for thermal blankets themselves. The commenter states that the 60-degree flame test—the only test required by the FAA for the wiring on commercial airplanes—should be replaced immediately with the vertical flame test as a minimum requirement, and that every type of wire insulation in all airplanes should have to meet it.

The FAA does not concur. The current flammability standard for wiring has not been determined to be inadequate. The actions required by this AD are intended to address an identified unsafe condition, which is that MPET-covered insulation blankets can contribute to the spread of a fire when ignition occurs from a small ignition source such as electrical arcing or sparking. As noted previously, the FAA has a major program underway to address issues related to airplane wiring and problems are being addressed as they are identified.

Corrosion Protection

One commenter states that for Model MD–11 series airplanes to be afforded the same corrosion protection offered by the OEM installation, any fabricated blankets must meet the original type design. The existing Corrosion Prevention and Control Program (CPCP) requirements are based on the performance of the insulation system. Any compromise or alteration will necessitate changes to the CPCP. Many insulation blankets cannot be installed as they originally were due to installation of overlying structure. Therefore, deviations to the type design will have to be approved by the OEM and FAA in the form of an AMOC. The burden of these approvals will stress the resources of the OEM and FAA over the duration of the compliance period.

The FAA does not concur. The FAA is aware of the potential effects of changing insulation material has on the corrosion protection of the affected airplanes. The airplane manufacturer intends to take this into account so that no change to the CPCP is required. Any operator or modifier also will be required, under paragraph (e) of this AD, to address any ramifications to the CPCP in any request for an AMOC.

Add New Inspection

One commenter requests that, if it is determined that an insulation blanket is not constructed of MPET during the action required by paragraph (a) of the proposed AD's, a visual inspection be conducted to detect fire damage, electrical arcing, discoloration, or other physical damage. The commenter also requests a visual inspection for possible ignition sources during routine maintenance on airplanes not affected by the proposed AD's.

The FAA does not concur with the commenter's request to revise paragraph (a) of the final rule to include a visual inspection for possible ignition sources. If any evidence of fire damage is found during the subject inspection, operators are already required to investigate and determine the source of the problem. This is no different from any other maintenance action that is performed by the operators. It is not necessary to include any additional requirements in this AD to accomplish this action.

Alternative Method of Compliance

One commenter states that it has developed a system whereby the existing bagged insulation can be removed from the airplane without the necessity of interfering with wiring

harnesses or other unrelated systems. The commenter claims that its system would reduce the installation time of the proposed AD's, reduce the cost of compliance, and reduce the remote chances of creating future related AD's caused by the method of compliance. Another commenter states that it also has developed an insulation system that works around existing equipment and thus eliminates the need to remove much of the equipment that is not normally removed during heavy maintenance checks. The commenter claims that its system is lighter in weight than the OEM insulation system and will result in fuel savings.

One commenter agrees that the flammability/flame spread performance of the MPET-covered insulation blankets should be improved, but questions proposed AD's that would require blanket replacement. The commenter states that this approach may not be the only possible method of addressing the issue. This concept is especially important considering the potential negative consequences of required airplane disassembly to accomplish the blanket replacement. The commenter suggests that there may be other options such as spray coatings that offer virtually equivalent performance with little negative impact.

From these comments, the FAA infers that the commenters are requesting that the final rules be revised to include the commenter's systems for replacing or modifying the MPET insulation blankets. The FAA does not concur. The commenters did not provide any technical details for the FAA to make a finding. Paragraph (e) of the final rule contains provisions for requesting approval of an AMOC to address these types of unique circumstances.

One commenter requests that the FAA require installation of additional fire resistant material(s) between the insulation blankets and any adjacent wires, wire bundles, or other potential ignition sources instead of removing and replacing MPET insulation blankets. The commenter also requests that the FAA consider this approach on either a full or partial basis. Another commenter believes that fire resistant material(s) in such a location would better promote the overall safety of the affected airplanes.

The FAA acknowledges that this suggestion may be a possible acceptable alternative to removing the existing insulation blankets. However, no change to the final rule is necessary. Under paragraph (e) of the AD, operators may apply for the approval of an AMOC or adjustment of the compliance time that provides an acceptable level of safety.

Communication

One commenter requests that the FAA have a public meeting regarding the proposed AD's. The commenter states that, because many vendors are trying to develop materials that meet the new FAA requirements, and the market price of these materials seems to vary drastically at present, it just has insufficient information on new materials.

The FAA does not concur that a public meeting regarding the proposed AD's is necessary. Through the FAA Technical Center, the FAA has provided a forum to develop flammability standards for insulation materials. In addition, the FAA is aware of a number of meetings hosted by the airplane manufacturer to provide information to operators affected by the requirements of this AD. The FAA is sensitive of the public's concern with the fire safety issues associated with this AD and is aware of the effects this AD will have on operators. The FAA has determined that an unsafe condition exists, and that the actions required by this AD are necessary in order to ensure the continued safety of the affected fleet.

Extend Comment Period of NPRM's, Delay Issuance of Final Rules, and Withdraw NPRM's

For the reasons described above, several commenters request that the FAA do one or more of the following: (1) Extend the public comment period for the NPRM's and supplemental NPRM's; (2) delay issuance of the final rules; or (3) withdraw the NPRM's and combine them with the draft burnthrough NPRM. (The FAA infers that the commenters are referring to a draft NPRM relating to insulation blanket flammability. The FAA announced its intention to develop new flammability standards for thermal/acoustic insulation in October 1998. This announcement included mention of improved burnthrough protection.)

One commenter states that it is not uncommon, in the case of an AD relating to issues not as complex as the proposed AD's, for the FAA to allow 90 days or more to comment. The 45-day comment period of the proposed AD's does not allow for proper understanding and evaluation on which to develop reasonable comments.

The FAA does not concur with the commenters' request to extend the comment period. On November 10, 1999, the FAA issued supplemental NPRM's to reopen the comment period for an additional 25 days to provide opportunity for public comment (the comment period for the NPRM's was 45 days and closed on September 27, 1999). The FAA finds that the public has had a reasonable opportunity to comment on the substance of the AD's. The FAA does not concur with the commenter's statement that it is not uncommon for the FAA to allow 90 days or more for the public to comment on proposed AD's. The standard comment period is 45 days for NPRM's and 25 days for supplemental NPRM's in which the FAA has responsibility as the State of Design of the affected airplanes. A 90-day comment period would be uncommon.

As discussed above in ''Inadequate Procedures in Referenced Service Bulletins,'' the FAA also finds that it is possible to accomplish the requirements of this AD. Since the issuance of the NPRM's, the airplane manufacturer, in conjunction with operators, has completed the prototype installations. Based on the results of these installations, the airplane manufacturer is developing revisions to the service bulletins referenced in the AD's to include detailed instructions for accomplishment of the required replacement. These revised service bulletins are scheduled for completion in June 2000. Any new or revised service bulletins, among other items, will contain procedures to maintain/test the integrity of the wiring after accomplishment of the replacement of any MPET insulation blanket. These revised service bulletins will be approved as an AMOC for the requirements of this AD.

The FAA does not concur with the commenter's request to delay issuance of the final rules. These revised service bulletins are scheduled for completion in June 2000. The FAA has determined that, while physically challenging, the actions required by the AD can be accomplished within the 5-year compliance time, and that the actions are warranted to address an identified unsafe condition.

In support of its request to withdraw the NPRM's, one commenter contends that other rulemaking in development by the FAA may eventually affect the airplanes covered by this AD, thereby requiring two extensive modifications.

The FAA does not concur with the commenter's request to withdraw the NPRM's and combine them with the draft burnthrough NPRM. Any other regulatory action to raise the level of safety would have to be justified and subject to public comment. The FAA does not anticipate requiring airplanes to be modified twice as a result of future actions. The actions required by this AD are intended to correct an identified unsafe condition by removing MPET insulation blankets from airplanes

affected by these AD's. These actions are not intended to provide a general upgrade to the current level of safety specified in the airworthiness regulations. Therefore, the actions required by these AD's are warranted.

One commenter disagrees that prototyping efforts are necessary to determine the feasibility of the requirements of the proposed AD's and disagrees that issuance of the proposed AD's should be delayed. The commenter states that it is in the process of prototyping the insulation retrofit on several affected airplanes. The commenter expects the prototyping to be completed in 6 weeks (the commenter's letter was received by the FAA on September 27, 1999). The FAA concurs with the commenter that issuance of the final rules should not be delayed. As discussed previously, the FAA has participated in the prototyping specified by the commenter, and that prototyping effort has been completed.

Cost Estimates

Several commenters state that the FAA ''grossly'' underestimated the costs associated with accomplishing the requirements of the proposed AD and provided their cost estimates. Two other commenters provided cost estimates that were less than those provided in the NPRM's.

The FAA concurs that the cost estimates specified in the NPRM's were underestimated. The FAA based its cost estimates on information that was available at the time the NPRM's were issued. Since the issuance of the NPRM's, the FAA has carefully reviewed the information and cost estimates provided by the commenters and the information obtained during the prototype exercises. The FAA has learned that most Model DC–9–80 and MD–90–30 series airplanes do not have MPET insulation blankets installed in the nose section of the airplane. Also, a number of airplanes do not have MPET insulation blankets in the fuselage, but have MPET insulation blankets only on the air conditioning ducting. The airplane manufacturer will be making this information available when the service bulletins are revised, as mentioned above. In light of these findings, the FAA has revised the cost estimates for the final rules, which is summarized below under the heading ''Regulatory Evaluation Summary.''

Several commenters request that the FAA reevaluate the cost estimates once the prototype exercises are completed. As discussed previously, the FAA has revised the cost estimate of the final rules based on the prototype exercises.

Several commenters state that the FAA should consider costs associated with accomplishing the requirements of both proposed AD's (*i.e.,* Rules Dockets 99–NM–161–AD and 99–NM–162–AD) , under Title II of the Unfunded Mandates Reform Act of 1995.

The FAA did consider the total costs associated with accomplishing the requirements of both NPRM's for all affected airplanes under the heading ''Regulatory Evaluation Summary'' in the preamble of the NPRM's. A copy of the Preliminary Cost Analysis and Initial Regulatory Flexibility Analysis also were included in each docket. These documents, along with the final documents, are available for the public to review.

Conclusion

After careful review of the available data, including the comments noted above, the FAA has determined that air safety and the public interest require the adoption of the rule with the changes previously described. The FAA has determined that these changes will neither increase the economic burden on any operator nor increase the scope of the AD.

Regulatory Evaluation Summary

To determine the regulatory impact of this AD, the FAA conducted a Final Cost Analysis and a Final Regulatory Flexibility Analysis. In addition, the FAA assessed the impact of this AD on international trade and determined whether it must satisfy the requirements of the Unfunded Mandate Reform Act. While a summary of these findings is reported in this preamble, a more detailed discussion is included in the Rules Docket for this AD.

Since the publication of the NPRM, the FAA has observed several prototype exercises that involved the removal and replacement of MPET insulation blankets. Information gained through these exercises has contributed to greater understanding by the FAA, operators, and manufacturer of the technical details and impacts of the requirements of this AD.

The FAA took account of the results of the prototype exercises, comments to the NPRM's, and other additional information, and then adjusted its estimates of the costs attributable to this AD. Further, recent information indicates that the count of affected airplanes is 621 Model DC–9–80 series airplanes and 21 Model MD–90–30 series airplanes. Specifics of these adjustments are discussed below.

Several commenters indicate that the FAA underestimated the costs of the new insulation material, labor hours necessary for retrofitting, and lost passenger revenue from retrofitting downtime. With respect to labor and material costs, the FAA contacted the major material suppliers (one of which was the airplane manufacturer) and three carriers that together operate 75% of the affected fleet. Information and estimates from these sources support increases both in the level of detail and in the levels of labor and material costs for this adjusted estimate. Therefore, the labor cost calculation methods used in this AD differ from those used in the NPRM's. The FAA has developed the labor estimates for this AD using information supplied by the manufacturer and affected operators to arrive at average values specific to the requirements of this AD. The FAA considers these values conservative.

The commenters express disagreement with the asset-based approach the FAA used in the Preliminary Cost Analysis to estimate the cost of the loss of service of the airplanes during their retrofits. The commenters suggest that the estimate be made on the basis of loss of per seat revenue. There are two reasons why the FAA uses the asset-based approach. First, the FAA takes an industry-wide perspective in which a passenger who cannot be seated on an airplane that is out of service for compliance with this AD can be seated on an airplane that is in service. On an industry-wide basis, no revenue will be lost. Second, the contribution of a seat's revenue to corporate net income is subject to variations in accounting, financial, marketing, and operational practice.

The FAA's asset-based approach centers on the financial ratio, overall corporate rate of return, which was reported by the operators and published by the Department of Transportation. This ratio is applied to the average value of the assets lost to the service of the operators and is adjusted for the average period of time for which they are lost because of compliance. This approach assumes that operators maximize the value of their firms by optimizing the mix and quantity of their assets.

Even though the FAA uses essentially the same ''lost-revenue'' method as that in the supplemental NPRM's, the FAA nevertheless did increase its estimates of lost revenue by increasing the number of days out of service, reducing the operating base year from 365 days to approximately 320 days, and raising the rate of return (9% is an average of domestic passenger and cargo operators' profit rates as estimated by the Department of Transportation's Bureau of Transportation Statistics). All of these adjustments raise the value of the

variables applied to the airplane asset values (*i.e.,* $16.2 million per DC–9–80/MD–90–30).

The FAA has identified 621 Model DC–9–80 and 21 MD–90–30 series airplanes that will be subject to retrofitting. Four of these airplanes have MPET insulation installed throughout. Thirty-five of these airplanes have MPET insulation installed only around air conditioning ducts. Six hundred and three of these airplanes have MPET installed throughout except for the nose. These patterns of installation strongly affect the retrofitting costs for each individual airplane. The FAA final costs estimate reflects the cost of each airplane when averaged for the total DC–9–80/MD–90–30 affected fleet.

The foregoing results in the following adjustments to the calculations presented in the supplemental NPRM.

For Model DC–9–80 series airplanes, the preliminary estimates for labor, material, and lost service per airplane were as follows: labor, $335,988; material, $27,021; and lost service, $20,416. The corresponding MD–90–30 estimates were as follows: $385,560; $31,008; and $37,052.

The components of this adjusted estimate per airplane, for both Model DC–9–80 and MD–9–30 series airplanes, are as follows: combined labor and material, $479,921 (averaged as $628,184 for 4 airplanes, $73,156 for 35 airplanes, and $502,547 for 603 airplanes, as discussed above); and lost service, $65,998. Overall, the adjusted estimates compare to the original estimates as follows:

Original	Adjusted
625 DC–9–80, each $383,000.	621 MD80s, each $545,919.
22 MD–90–30, each $454,000.	21 MD90s, each $545,919.

The adjusted estimate of the total costs of this AD over the five-year retrofit period for all 644 affected narrow-body airplanes is approximately $351.6 million or $288.6 million discounted to present value. The total impact for all affected airplanes (i.e., Model DC–9–80, MD–90–30 , MD–11, and DC–10 series airplanes) is 449.3 million or 368.4 million discounted to present value over the five year compliance time.

With respect to effects on small entities, the Regulatory Flexibility Act (RFA) of 1980 establishes ''as a principle of regulatory issuance'' that agencies shall endeavor, consistent with the objective of the rule and of applicable statutes, to fit regulatory and informational requirements to the sale of the business, organizations, and governmental jurisdictions subject to regulation. To achieve that principle, the RFA requires agencies to solicit and consider flexible regulatory proposals and to explain the rationale for their actions. The RFA covers a wide range of small entities, including small businesses, not-for-profit organizations, and small governmental jurisdictions. Agencies must perform a review to determine whether a proposed or final rule will have a significant economic impact on a substantial number of small entities. If the determination is that it will, the Agency must prepare a regulatory flexibility analysis as described in the RFA. However, if an agency determines that a proposed or final rule is not expected to have a significant economic impact on a substantial number of small entities, section 605(b) of the RFA provides that the head of the agency may so certify and a regulatory flexibility analysis is not required. The certification must include a statement providing the factual basis for this determination, and the reasoning should be clear.

Of the operators affected by this AD, all but three are air carriers, none of which is a small business. In two of the remaining cases, Model DC–9–80 series airplanes are owned for personal use. One Model DC–9–80 series airplane is operated for non-carrier business purposes by a large corporation. Although the small business size criterion is met in the cases of the two Model DC–9–80 series airplanes that are owned for personal use, two such entities do not constitute a ''substantial number'' within the meaning of the RFA. Thus, pursuant to the Regulatory Flexibility Act, 5 U.S. C. 605(b), the FAA certifies that this AD will not have a significant economic impact on a substantial number of small entities.

The provisions of this AD will have little or no impact on trade for U.S. firms doing business in foreign countries and foreign firms doing business in the United States.

Finally, Title II of the Unfunded Mandates Reform Act of 1995 (the Act), enacted as Public Law 104–4 on March 22, 1995, requires each Federal agency, to the extent permitted by law, to prepare a written assessment of the effects of any Federal mandate in a proposed or final agency rule that may result in the expenditure by State, local, and tribal governments, in the aggregate, or by the private sector, of $100 million or more (adjusted annually for inflation) in any one year. Section 204(a) of the Act, 2 U.S.C. 1534, requires the Federal agency to develop an effective process to permit timely input by elected officers (or their designees) of State, local, and tribal governments on a proposed ''significant intergovernmental mandate.'' A ''significant intergovernmental mandate'' under the Act is any provision in a Federal agency regulation that would impose an enforceable duty upon State, local, and tribal governments, in the aggregate, of $100 million (adjusted annually for inflation) in any one year. Section 203 of the Act, 2 U.S.C. 1533, provides that before establishing any regulatory requirements that might significantly or uniquely affect small governments, the agency shall have developed a plan that, among other things, provides for notice to potentially affected small governments, if any, and for a meaningful and timely opportunity to provide input in the development of regulatory proposals.

This AD does not contain any Federal intergovernmental or private sector mandate. Therefore, the requirements of Title II of the Unfunded Mandates Reform Act of 1995 do not apply.

List of Subjects in 14 CFR Part 39

Air transportation, Aircraft, Aviation safety, Incorporation by reference, Safety.

Adoption of the Amendment

Accordingly, pursuant to the authority delegated to me by the Administrator, the Federal Aviation Administration amends part 39 of the Federal Aviation Regulations (14 CFR part 39) as follows:

PART 39—AIRWORTHINESS DIRECTIVES

1. The authority citation for part 39 continues to read as follows:

Authority: 49 U.S.C. 106(g), 40113, 44701.

§ 39.13 [Amended]

2. Section 39.13 is amended by adding the following new airworthiness directive:

2000–11–01 McDonnell Douglas: Amendment 39–11749. Docket 99–NM–161–AD.

Applicability: Model DC–9–81 (MD–81), DC–9–82 (MD–82), DC–9–83 (MD–83), DC–9–87 (MD–87) series airplanes; Model MD–90–30 series airplanes; and Model MD–88 airplanes; manufacturer's fuselage numbers 995 through 2243 inclusive; certificated in any category.

Note 1: This AD applies to each airplane identified in the preceding applicability provision, regardless of whether it has been modified, altered, or repaired in the area subject to the requirements of this AD. For airplanes that have been modified, altered, or repaired so that the performance of the requirements of this AD is affected, the

owner/operator must request approval for an alternative method of compliance in accordance with paragraph (e) of this AD. The request should include an assessment of this AD; and, if the unsafe condition has not been eliminated, the request should include specific proposed actions to address it.

Compliance: Required as indicated, unless accomplished previously.

To ensure that insulation blankets constructed of metallized polyethyleneteraphthalate (MPET) are removed from the fuselage, accomplish the following:

Inspection

(a) Within 5 years after the effective date of this AD, determine whether, and at what locations, insulation blankets constructed of MPET, are installed. When markings are not visible, the determination shall be made by using known MPET material as a comparison sample to assist in the identification.

Note 2: Insulation blankets that are marked with ''DMS 2072, Type 2, Class 1, Grade A;'' ''DMS 2072, Type 2, Class 1;'' or ''DMS 1996, Type 1;'' are constructed of MPET.

Corrective Actions

(b) For insulation blankets that are determined not to be constructed of MPET, no further action is required by this AD.

(c) For insulation blankets that are determined to be constructed of MPET, within 5 years after the effective date of this AD, replace the MPET insulation blankets with new insulation blankets that have been approved by the Manager, Los Angeles Aircraft Certification Office (ACO), FAA, Transport Airplane Directorate. The blankets shall be replaced in accordance with the Accomplishment Instructions of McDonnell Douglas Service Bulletin MD–90–25–015, Revision 01, dated November 5, 1997 (for Model MD–90–30 series airplanes); or McDonnell Douglas Service Bulletin MD80–25–355, Revision 01, dated November 5, 1997 (for Model DC–9–80 series airplanes and Model MD–88 airplanes); as applicable. The replacement insulation blankets must be constructed of materials tested in accordance with Appendix 1 of this AD, or in accordance with a method approved by the Manager, Los Angeles ACO.

Note 3: Although this paragraph allows up to 5 years for the required replacement, the FAA anticipates that operators will comply at the earliest practicable maintenance opportunity.

Note 4: Only one of the two metallized Tedlar™ covers specified in the service bulletins has been shown to have successfully passed the testing of the American Society for Testing and Materials (ASTM) flammability standard and is considered acceptable for compliance with the requirements of paragraph (c) of this AD.

Spares

(d) As of the effective date of this AD, no person shall install an MPET insulation blanket on any airplane.

Alternative Methods of Compliance

(e) An alternative method of compliance or adjustment of the compliance time that provides an acceptable level of safety may be used if approved by the Manager, Los Angeles ACO. Operators shall submit their requests through an appropriate FAA PMI, who may add comments and then send it to the Manager, Los Angeles ACO.

Note 5: Information concerning the existence of approved alternative methods of compliance with this AD, if any, may be obtained from the Los Angeles ACO.

Special Flight Permits

(f) Special flight permits may be issued in accordance with sections 21.197 and 21.199 of the Federal Aviation Regulations (14 CFR 21.197 and 21.199) to operate the airplane to a location where the requirements of this AD can be accomplished.

Incorporation by Reference

(g) The blankets shall be replaced in accordance with the Accomplishment Instructions of McDonnell Douglas Service Bulletin MD–90–25–015, Revision 01, dated November 5, 1997; or McDonnell Douglas Service Bulletin MD80–25–355, Revision 01, dated November 5, 1997; as applicable. This incorporation by reference was approved by the Director of the Federal Register in accordance with 5 U.S.C. 552(a) and 1 CFR part 51. Copies may be obtained from Boeing Commercial Aircraft Group, Long Beach Division, 3855 Lakewood Boulevard, Long Beach, California 90846, Attention: Technical Publications Business Administration, Dept. C1–L51 (2–60). Copies may be inspected at the FAA, Transport Airplane Directorate, 1601 Lind Avenue, SW., Renton, Washington; or at the FAA, Transport Airplane Directorate, Los Angeles Aircraft Certification Office, 3960 Paramount Boulevard, Lakewood, California; or at the Office of the **Federal Register**, 800 North Capitol Street, NW., suite 700, Washington, DC.

(h) This amendment becomes effective on June 30, 2000.

Appendix 1.—Test for Materials Replacing Metallized PET Thermal Acoustical Insulation, Film February 16, 2000

This test method is used to evaluate the flammability and flame propagation characteristics of thermal/acoustic insulation when exposed to both a radiant heat source and a flame.

(a) *Definitions.*

(1) *Thermal/Acoustic Insulation.* Thermal/acoustic insulation is defined as a material or system of materials used to provide thermal and/or acoustic protection. Examples include a film-covering material encapsulating a core material such as fiberglass or other batting material and foams.

(2) *Radiant Heat Source.* The radiant heat source is an air/gas fueled radiant heat energy panel.

(b) *Test Apparatus* (as schematically shown in figure 1).

(1) *Radiant Panel Test Chamber.* Tests will be conducted in the radiant panel test chamber as used in ASTM—Designation: E 648. It is suggested that the test chamber be located under an exhaust hood to facilitate clearing the chamber of smoke after each test. The radiant panel test chamber shall consist of an enclosure 55 inches (1400 mm) long by 19½ inches (500 mm) deep by 28 inches (710 mm) above the test specimen. The sides, ends, and top shall be insulated with a fibrous ceramic insulation such as Kaowool™ board. One side shall be provided with an approximately 48 by 6 inch (1219 by 152mm) draft tight, high temperature, heat resistant glass observation window, to facilitate viewing the sample during testing. On the same side and below the window is a door which, when open, allows the specimen platform to be moved out for mounting or removal of test specimens. The bottom of the test chamber shall consist of a sliding steel platform, which has provisions for securing the test specimen holder in a fixed and level position. The top of the chamber shall have an exhaust stack with interior dimensions of 4 inches (102mm) wide by 15 inches (380 mm) deep by 12.5 inches (318mm) high at the opposite end of the chamber from the radiant energy source.

(2) *Radiant Heat Source.* The radiant heat energy source will be a panel of porous refractory material mounted in a cast iron frame, with a radiation surface of 12 by 18 inches (305 by 457mm). It shall be capable of operating at temperatures up to 1500°F (816°C (Figure 1).

Figure 1.

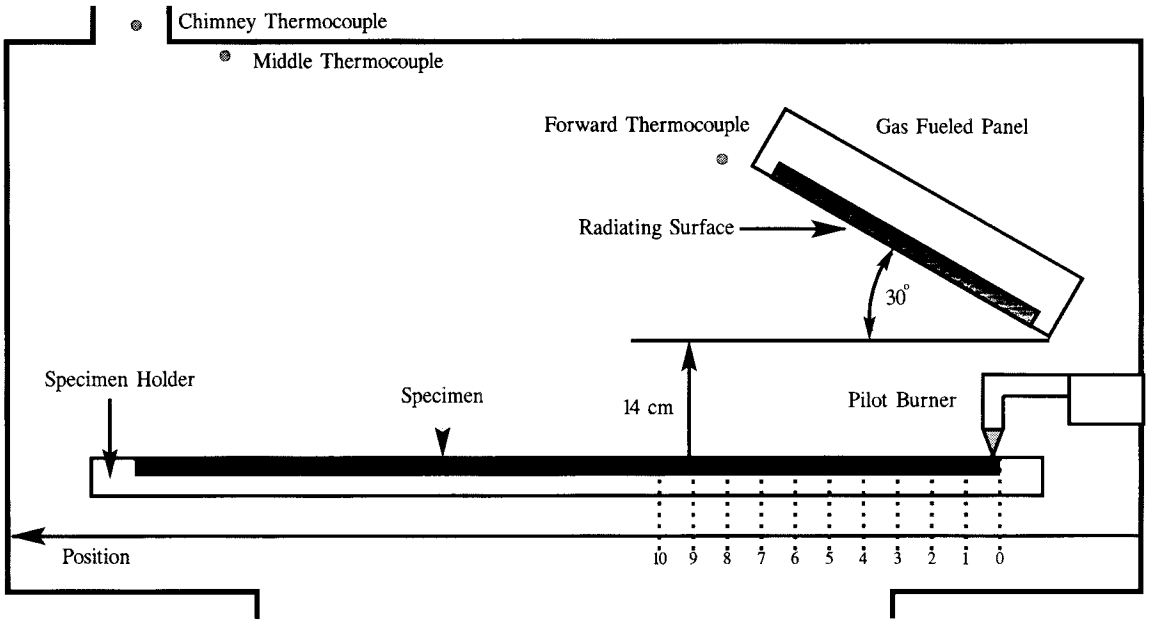

(i) Radiant Panel Fuel System. The radiant panel fuel will be propane (liquid petroleum gas—2.1 UN 1075). The panel fuel system shall consist of a venturi-type aspirator for mixing gas and air at approximately atmospheric pressure. Suitable instrumentation will be necessary for monitoring and controlling the flow of fuel and air to the panel. Instrumentation will include an air flow gauge, an air flow regulator, a gas pressure gauge, and a rotameter for measuring gas flow.

(ii) Radiant Panel Placement. The panel will be mounted in the chamber at 30 degrees to the horizontal specimen plane.

(3) *Specimen Holding System.*

(i) The sliding platform serves as the housing for test specimen placement. A ¼ inch (6.35mm) sheet of Durarock, or other non-combustible base, measuring 43¼ inches by 12½ inches (1098 by 317.5mm) will be placed in the open bottom (base) of the sliding platform. It is necessary to cut the non-combustible base into two pieces for placement in the bottom of the platform, since it will be supported by a ¾-inch (19.1mm) lip that extends around the bottom of the platform base. It is suggested that the shortest piece be placed at the end furthest from the radiant panel (figure 2). A ½ inch (13mm) piece of Kaowoolλ™ board or other high temperature material measuring 41½ by 8¼ inches (1054 by 210mm) will be attached to the back side of the platform. This board will serve as a heat retainer and will protect the test specimen from excessive preheating. The height of this board must not be too high such that it will impede the sliding platform movement (in and out) of the test chamber.

Figure 2: Sliding Platform

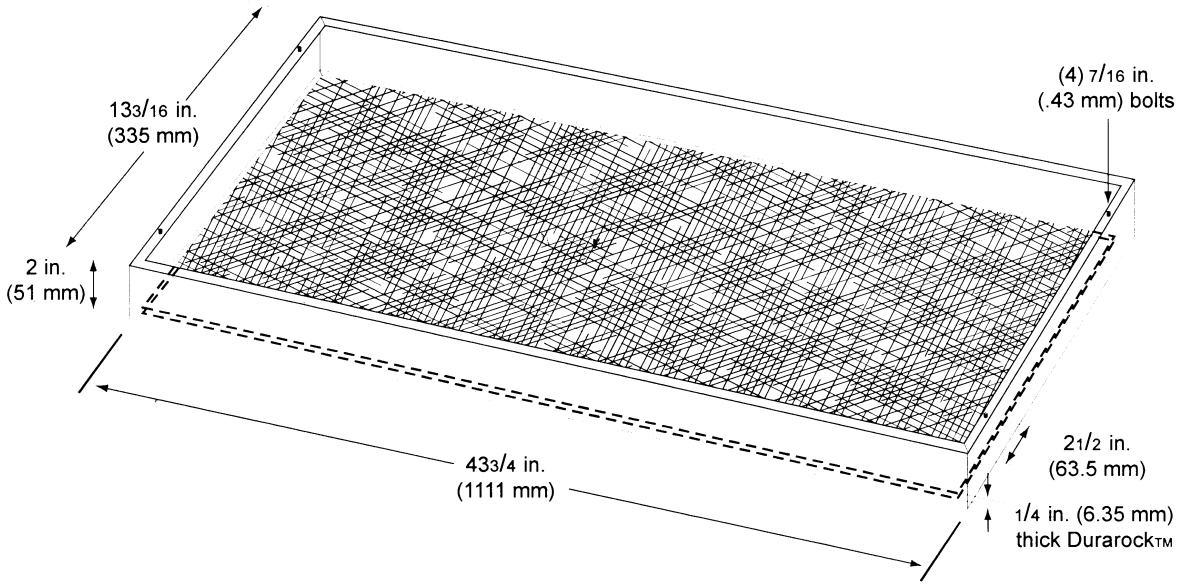

(ii) The test specimen will be placed horizontally on the non-combustible base. A stainless steel retaining frame (AISI Type 300 UNA–NO8330), or equivalent, having a thickness of 0.078 inches (1.98mm) and overall dimensions of 44¾ by 12¾ inches (1137 by 320mm) with a specimen opening of 40 by 7⅞ (1016 by 140mm) will be placed on top of the test specimen. The retaining frame will have two ½inch (12.7mm) holes drilled at each end for positioning the frame to the two stud bolts at each end of the sliding platform (figure 3).

Figure 3: Stainless Steel Retaining Frame

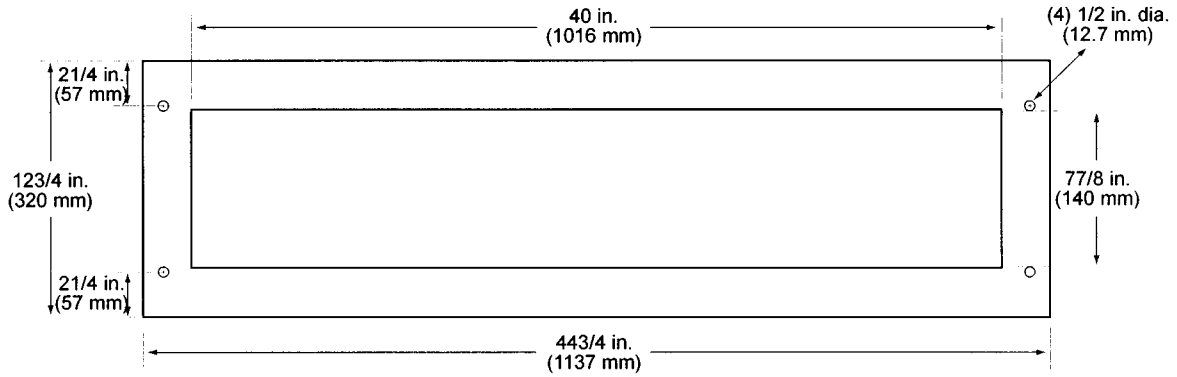

(iii) A securing frame (acting as a clamping mechanism) constructed of mild steel will be placed over the test specimen. The securing frame overall dimensions are 42½ by 10½ inches (1080 by 267mm) with a specimen opening of 39½ by 7½ inches (1003 by 190mm). Hence, the exposed area of test specimen exposed to the radiant panel is 39¼ by 7¼ inches (996 by 184mm). See figure 4. It is not necessary to physically fasten the securing frame over the test specimen due to the weight of the frame itself.

(4) *Pilot Burner.* The pilot burner used to ignite the specimen is a commercial propane venturi torch with an axially symmetric burner tip having a propane supply tube with an orifice diameter of 0.003 inches (0.076mm). The propane flow is adjusted to produce a pencil flame blue inner cone length of ½ inch (13mm). There will be a means provided to move the burner out of the ignition position so that the flame is horizontal and at least 2 inches (50mm) above the specimen plane.

(5) *Thermocouples.* Three 24 American Wire Gauge (AWG) Type K (Chromel-Alumel) thermocouples will be installed in the test chamber for temperature monitoring. All three are inserted into the chamber through three small holes drilled through the top of the chamber. One thermocouple is placed 2 inches (51mm) from the end of the radiant panel and approximately 16 inches (406mm) above the test specimen. The second thermocouple is placed 5 inches (127mm) from the first thermocouple and approximately 16 inches (406mm) from the sample. The third thermocouple is located in the chimney approximately 38 inches (965mm) above the specimen.

(6) *Calorimeter.* The calorimeter will be a one inch cylindrical water-cooled, total heat flux density, foil type Gardon Gage that has

a range of 0 to 5 BTU/ft²-second (0 to 5.6 Watts/cm²).

(7) *Calorimeter Calibration Specification and Procedure.*

(i) Calorimeter Specification.

(A) Foil diameter will be 0.25±0.005 inches (6.35±0.13mm).

(B) Foil thickness will be 0.0005±0.0001 inches (0.013±0.0025mm).

(C) Foil material will be thermocouple grade Constantan.

(D) Temperature measurement will be a Copper Constantan thermocouple.

(E) The copper center wire diameter will be 0.0005 inches (0.013mm).

(F) The entire face of the calorimeter will be lightly coated with ''Black Velvet'' paint having an emissivity of 96 or greater.

(ii) Calorimeter Calibration.

(A) The calibration method will be by comparison to a like standardized transducer.

(B) The standardized transducer will meet the specification given in paragraph (6).

(C) It will be calibrated against a primary standard by the National Institute of Standards and Technology (NIST).

(D) The method of transfer will be a heated graphite plate.

(E) The graphite plate will be electrically heated, have a clear surface area on each side of the plate of at least 2 by 2 inches (51 by 51mm), and be ⅛ inch ±1/16 inch thick (3.2 ±1.6mm).

(F) The 2 transducers will be centered on opposite sides of the plates at equal distances from the plate.

(G) The distance of the calorimeter to the plate will be no less than 0.0625 inches (1.6mm), nor greater than 0.375 inches (9.5mm).

(H) The range used in calibration will be at least 0–3.5 BTUs/ft² second (0–3.9 Watts/cm²) and no greater than 0–5.6 BTUs/ft² second (0–5 Watts/cm²).

(I) The recording device used must record the 2 transducers simultaneously or at least within 1/10 second of each other.

(8) *Calorimeter Fixture.* With the sliding platform pulled out of the chamber, install a 2-rail fixture that has a travel range of 40¼ inches (1022mm) over the sliding platform. The dimension between the 2 rails is 2 11/16 inches (68mm). The rail fixture is screwed into the sliding panel, such that it is always directly under the geometric center of the radiant panel (figure 4). Push the platform into the chamber and insert the calorimeter. The calorimeter, which is mounted in an insulated housing, fits in the rail opening but has enough clearance such that it may be moved along the rail for heat flux readings. The top surface of the calorimeter must be level with the rails.

Figure 4: Angle Iron (1.5x1.5) Securing Frame
*NOTE: All Seams Welded

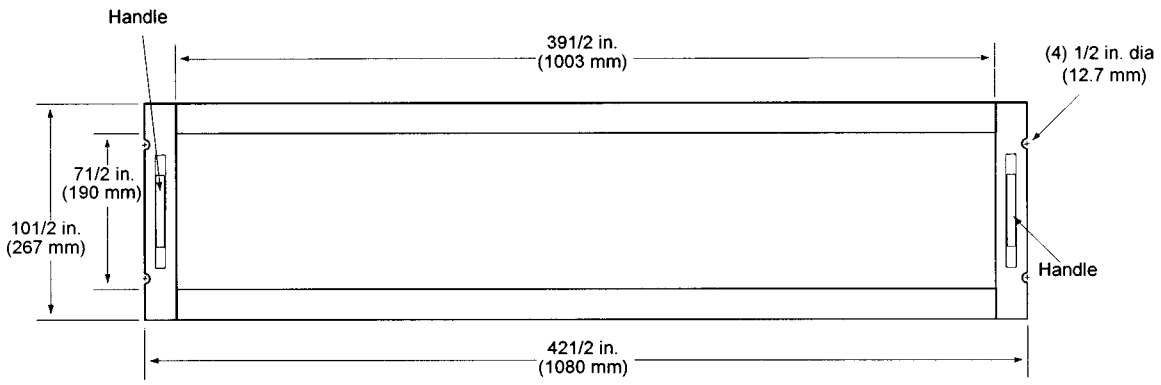

(9) *Instrumentation.* A calibrated recording device with an appropriate range or a computerized data acquisition system will be provided to measure and record the outputs of the calorimeter and the thermocouples. The data acquisition system must be capable of recording the calorimeter output every second.

(10) *Timing Device.* A stopwatch or other device, accurate to ±1second/hour, will be provided to measure the time of application of the pilot burner flame.

(c) *Test Specimens.*

(1) Specimen Preparation. A minimum of three test specimens will be prepared and tested.

(2) Construction. Cut a piece of core material such as foam or fiberglass. If fiberglass is used, cut the material 43½ (±¼) inches long (1093mm) (±6.3mm) by 12½ inches (305.1mm) wide. If using foam, cut the material 41¼ inches (1039mm) by 11 inches wide (279mm) by 1½ inches (381mm) high. Cut a piece of film cover material (if used) large enough to cover the core material. It is permissible to staple the film cover at the ends, as they are not exposed to the radiant heat source. A piece or pieces of an inorganic/inert material such as Kaowoolλ™ or Marinite ™ board may be placed in the bottom of the sliding platform holder if the sample is not thick enough to be level with the top of the sliding platform. The specimen thickness must be of the same thickness as installed in the airplane.

(d) *Specimen Conditioning.* The specimens will be conditioned at 70 ±5°F (21 ±2°C) and 55%±10% relative humidity for a minimum of 24 hours prior to testing.

(e) *Calibration.*

(1) With the sliding platform out of the chamber, install the rail fixture. Push the platform back into the chamber, install the calorimeter (in its housing), and move the calorimeter to the ''zero'' position (figure 5). Close the bottom door located below the sliding platform. The centerline of the calorimeter is 1⅞ inches (46mm) from the end of the sliding platform. This will be the ''zero'' position. The distance from the center of the calorimeter to the radiant panel surface at this point is 7.5 inches ±⅛ (191 mm ±3).

(i) Prior to igniting the radiant panel, ensure that the calorimeter face is clean and that there is water running through the calorimeter.

(2) Ignite the panel. Adjust the fuel/air mixture to achieve 1.5 BTUs/ft²–second ±0.025 BTUs/ft²–second (1.9 Watts/cm²±0.025 Watts/cm²) at the ''zero'' position. Allow the unit to reach steady state (this may take up to 1 hour). The pilot burner is off during this time. The temperature as measured by the thermocouple closest to the panel (forward) is approximately 1100°F (600°C). The temperatures recorded by thermocouples 2 and 3 (thermocouple 3 located in chimney) are approximately 430°F (230°C) and 300°F (135°C), respectively.

Figure 5: Calorimeter Rail

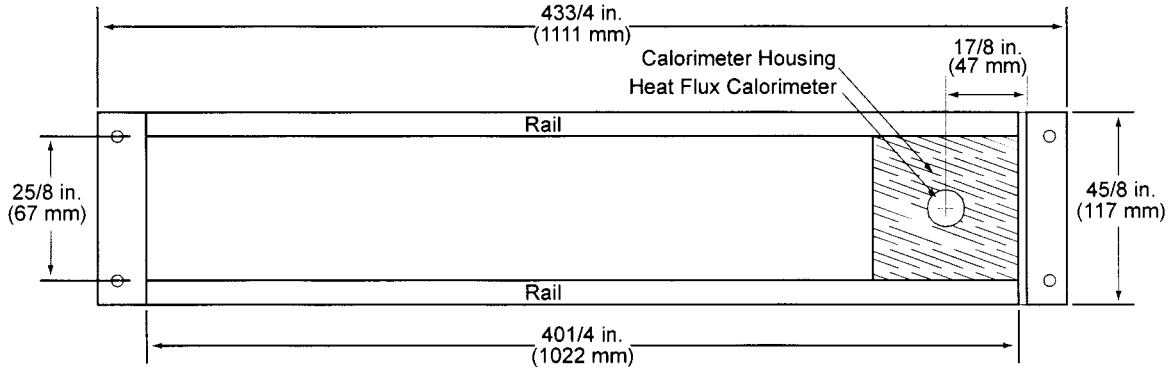

(3) After steady-state conditions have been reached, move the calorimeter 2 inches (51mm) from the ''zero'' position and record the heat flux. Allow a minimum of 30 seconds at each position for the calorimeter to stablize. Record at least 10 positions. (Figure 6 depicts a calibration profile.)

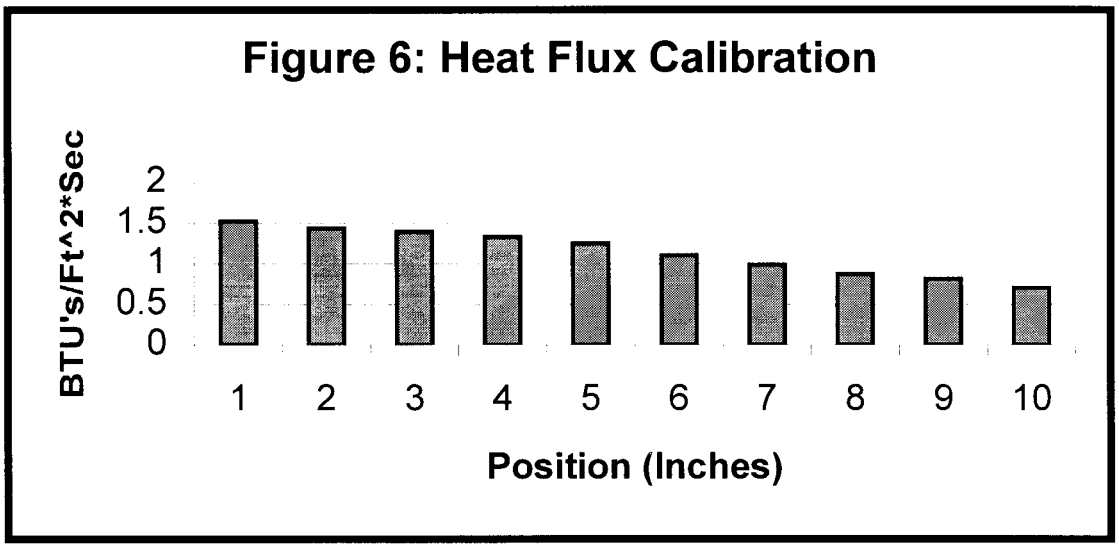

(4) It is not necessary to run a full heat flux calibration (minimum of 10 positions) each time the chamber is powered on. It is required that a heat flux measurement be taken at the ''zero'' position at the start of the test period (*e.g.,* each morning) to ensure that the 1.5 BTU/ft^2–second (1.9 Watts/cm^2) requirement be met. A full calibration should be run periodically.

(5) Open the bottom door, pull out the sliding platform, and remove the calorimeter and rail fixture.

(f) *Test Procedure.*

(1) Ignite the pilot burner. Ensure that it is at least 2 inches (51mm) above the top of the platform. The burner must not contact the specimen until the test begins.

(2) Place the test specimen in the sliding platform holder. Ensure that the test sample surface is level with the top of the platform. At ''zero'' point, the specimen surface is 7½ inches ±1/8 (191mm ±3) below the radiant panel.

(3) With film/fiberglass assemblies, it may be necessary to puncture small holes in the film cover to purge any air inside. This allows the operator to maintain the proper test specimen position (level with the top of the platform). The holes should be made in the sides and/or the corners of the test specimen using a needle-like tool.

(4) Place the retaining frame and the securing frame over the test specimen.

(5) A small mark should be placed on the ''zero'' point.

(6) Immediately push the sliding platform into the chamber and close the bottom door.

(7) Bring the pilot burner flame into contact with the center of the specimen such that the center line of the flame impinges on the ''zero'' point and simultaneously start the timer. The burner flame impinges the sample at an angle of approximately 20 degrees with the horizontal (front of the sliding platform).

(8) Leave the burner in position for 15 seconds and then remove to a position at least 2 inches (51mm) above the specimen.

(g) *Report.*

(1) Identify and describe the specimen being tested.

(2) Report any shrinkage or melting of the test specimen.

(3) Report the Burn length

(4) Report Extinguishing Time

(h) *Requirements.*

(1) During burner application, no flaming is allowed to propagate more than 2 inches (50.8mm) along the sample (to the left in figure 1) of the centerline of the flame.

(2) There shall be no flaming of the test sample after pilot burner removal.

Issued in Renton, Washington, on May 19, 2000.

John J. Hickey,

Manager, Transport Airplane Directorate, Aircraft Certification Service.

[FR Doc. 00–13149 Filed 5–25–00; 8:45 am]

BILLING CODE 4910–13–P

DEPARTMENT OF TRANSPORTATION

Federal Aviation Administration

14 CFR Part 39

[Docket No. 99–NM–162–AD; Amendment 39–11750; AD 2000–11–02]

RIN 2120–AA64

Airworthiness Directives; McDonnell Douglas Model DC–10–10F, DC–10–15, DC–10–30, DC–10–30F, and DC–10–40 Series Airplanes, and Model MD–11 and –11F Series Airplanes

AGENCY: Federal Aviation Administration, DOT.

ACTION: Final rule.

SUMMARY: This amendment adopts a new airworthiness directive (AD), applicable to certain McDonnell Douglas Model DC–10–10F, DC–10–15, DC–10–30, DC–10–30F, and DC–10–40 series airplanes, and Model MD–11 and –11F series airplanes, that requires a determination be made of whether, and at what locations, metallized polyethyleneteraphthalate (MPET) insulation blankets are installed, and replacement of MPET insulation blankets with new insulation blankets. This amendment is prompted by reports of in-flight and ground fires on certain airplanes manufactured with insulation blankets covered with MPET, which may contribute to the spread of a fire when ignition occurs from small ignition sources such as electrical arcing or sparking. The actions specified by this AD are intended to ensure that insulation blankets constructed of MPET are removed from the fuselage. Such insulation blankets could propagate a small fire that is the result of an otherwise harmless electrical arc and could lead to a much larger fire.

DATES: Effective June 30, 2000.

The incorporation by reference of certain publications listed in the regulations is approved by the Director of the Federal Register as of June 30, 2000.

ADDRESSES: The service information referenced in this AD may be obtained from Boeing Commercial Aircraft Group, Long Beach Division, 3855 Lakewood Boulevard, Long Beach, California 90846, Attention: Technical Publications Business Administration, Dept. C1–L51 (2–60). This information may be examined at the Federal Aviation Administration (FAA), Transport Airplane Directorate, Rules Docket, 1601 Lind Avenue, SW., Renton, Washington; or at the FAA, Transport Airplane Directorate, Los Angeles Aircraft Certification Office, 3960 Paramount Boulevard, Lakewood, California; or at the Office of the Federal Register, 800 North Capitol Street, NW., suite 700, Washington, DC.

FOR FURTHER INFORMATION CONTACT: Robert Stacho, Aerospace Engineer, Systems and Equipment Branch, ANM–130L, FAA, Transport Airplane Directorate, Los Angeles Aircraft Certification Office, 3960 Paramount Boulevard, Lakewood, California 90712–4137; telephone (562) 627–5334; fax (562) 627–5210.

SUPPLEMENTARY INFORMATION: A proposal to amend part 39 of the Federal Aviation Regulations (14 CFR part 39) to include an airworthiness directive (AD) that is applicable to certain McDonnell Douglas Model DC–10–30 and –30F series airplanes, and Model MD–11 and –11F series airplanes was published as a notice of proposed rulemaking (NPRM) in the **Federal Register** on August 12, 1999 (64 FR 43963). A second proposal that was identical to the NPRM, except that it affected additional airplanes, was published as a supplemental NPRM on November 17, 1999 (64 FR 62615). Those actions proposed to require that a determination be made of whether, and at what locations, metallized polyethyleneteraphthalate (MPET) insulation blankets are installed, and replacement of MPET insulation blankets with new insulation blankets.

Since the issuance of those NPRM's, the FAA has observed several prototyping exercises that involved the removal and replacement of MPET insulation blankets. The information obtained from these exercises assisted the FAA, operators, and manufacturer in understanding the technical details and impact of the requirements of this AD. Certain aspects of these prototype exercises will be discussed in the FAA's response to the comments received from the NPRM's.

Comments

Interested persons have been afforded an opportunity to participate in the making of this amendment. Due consideration has been given to the comments received.

The FAA has received comments in response to the NPRM's and supplemental NPRM's to Rules Docket No.'s. 99–NM–161–AD [applicable to certain McDonnell Douglas Model DC–9–81 (MD–81), DC–9–82 (MD–82), DC–9–83 (MD–83), DC–9–87 (MD–87) series airplanes; Model MD–90–30 series airplanes; and Model MD–88 airplanes] and 99–NM–162–AD (applicable to certain McDonnell Douglas Model DC–10–30 and –30F series airplanes, and Model MD–11 and –11F series airplanes). Because in most cases the issues raised by the commenters are generally relevant to both NPRM's, each final rule includes a discussion of all comments received.

Support for Proposed AD's

Several commenters support the intent of the proposed AD's; however, they request that some changes be made (discussed later).

Unsafe Condition

One commenter states that, because the MPET insulation blankets only propagate the flame and are not the source of the flame, the proposed AD's should address the unsafe condition (i.e., source of the flame) rather than previously certified material (which met the flammability standard at one time) that is not creating the unsafe condition. The FAA does not concur. MPET insulation blankets, when ignited from a small ignition source, such as an electrical arc, can contribute to the spread of a fire. Such insulation blankets could propagate a small fire and lead to a much larger fire. Potential ignition sources exist in many areas of the affected airplanes. It is extremely difficult to determine where all potential ignition sources are. To provide the level of safety that is expected by the public for transport category airplanes, insulation blankets constructed of MPET must be removed. Therefore, the FAA finds that it has properly identified the unsafe condition (i.e., insulation blankets constructed of MPET) addressed by these AD's.

The same commenter suggests that the subject blankets be handled as ''attrition replacements,'' as intended in the original McDonnell Douglas service bulletins. The commenter states that, since cabin interior flammability has been addressed already to a large extent by the FAA, MPET insulation blankets could be treated comparably, and thus, integrated into the overall interior materials requirements. (The FAA infers that the commenter is referring to the provisions in 14 CFR section 121.312 related to ''substantially complete replacement of the cabin interior.'') These requirements not only mandate stricter new standards, but allow older airplane interiors to remain in service

until a balanced decision is made to fully reconfigure the cabin. After that decision is made, the entire flammability rule must be met on these older airplane interiors, as well. The commenter argues that insulation blankets could be included, since the proposed requirements are in the same category of ''new flammability standards'' and do not address the actual ignition source.

The FAA does not concur with the commenter's request to handle the subject blankets as ''attrition replacements.'' Attrition is appropriate for safety enhancements, not to correct identified unsafe conditions. There is a distinct difference between correcting an identified unsafe condition and enhancing safety. The intent of the interior material flammability enhancement was to provide occupants more time to evacuate an airplane before the cabin environment would become unsurvivable due to smoke and fire. The existing interior materials were not deemed unsafe, and therefore, could remain in service until the airlines needed to replacement them. With this action, as discussed above, the FAA finds that MPET-covered insulation material represents an unsafe condition that must be corrected. These AD's are a vehicle for ensuring that all affected operators perform the necessary actions that will address the identified unsafe condition. Therefore, these AD's are appropriate and warranted.

One commenter expresses concern that, because the requirements of the proposed AD's are extremely costly and cumbersome, resources are being taken away from more effective measures for improving aviation safety. The commenter states that there are safety groups (both with wide aviation business basis) that have targeted the most important/critical areas to be addressed. However, neither of these groups has fire on board as its top priority. The commenter interprets this to mean that the safety experts looking at statistical data would rather concentrate their efforts in other fields.

While there may be groups that concentrate their efforts in other areas, the FAA has identified an unsafe condition that needs to be corrected (as discussed above). The activity referred to is primarily aimed at identifying areas for improved safety, and focusing resources on the most effective candidates. This is distinctly different from correcting an identified unsafe condition. Therefore, these AD's are appropriate and warranted.

One commenter notes that in its experience most blankets are wet or soaking wet in a short time after coming out fairly dry (*i.e.,* after extensive drying) during a heavy check. The commenter asks how it should explain to its mechanics that they have to replace wet blankets because of a fire hazard.

The FAA infers from this comment that the wet blankets are a result of the atmospheric conditions in which the airplane is being operated or a result of moisture accumulation in the belly of the fuselage. As discussed above, the FAA has identified an unsafe condition on the affected airplanes that needs to be corrected. As addressed in the preambles of the NPRM's, the FAA has received reports of a number of in-flight and ground fires on in-service airplanes manufactured with insulation blankets covered with MPET, which can cause fire to spread from a small ignition source such as electrical arcing or sparking. The fact that insulation material itself may be wet may not prevent the MPET film material from propagating the fire to other combustible materials and causing a larger fire.

One commenter states that the wording ''otherwise harmless electrical arcs'' in the Summary section in the preamble of the proposed AD's is misleading and requests that this wording be removed. The commenter reports that there has never been any Maintenance Steering Group (MSG) 3 testing on airplane wiring, and that no one other than the FAA has even evaluated the problems associated with momentary metal-to-metal contact of wires. In addition, the FAA has never evaluated the effects of spurious signals emitted from degraded wires that can affect flight control surfaces, autopilots, rudders, etc.

The FAA does not concur with the commenter's request to revise the Summary section of the AD's. The term ''otherwise harmless arcs'' refers to an electrical arc that, on insulation films other than MPET, would not propagate a fire. In this case, the effect of the arc is negligible. In the case of MPET, an uncontrolled fire could develop. The FAA points out that these AD's do not address the aging wiring issues that can affect various systems. As discussed in the preamble of the NPRM's, the FAA is continuing to investigate various wiring problems on certain airplanes. In addition, the Aging System Task Force (ASTF) is continuing to investigate the need for specific aging wiring inspections and tests, as well as the potential effect on systems from degraded wiring. The actions required by this AD only address the identified unsafe condition (i.e., insulation blankets constructed of MPET). The FAA may consider additional rulemaking actions to address any other identified unsafe condition.

Risk Assessment

Several commenters state that, in concert with the scheduled prototyping, a thorough risk assessment should be accomplished, particularly on the effects of replacing insulation blankets on the electrical (including wiring, cables, and installations), hydraulic, and mechanical systems. One commenter states that the risk assessment must be taken into account when mandating the scope and compliance of the proposed AD's. Several commenters state that a risk assessment is needed to determine whether areas exist where the risks associated with the replacement of MPET insulation blankets outweigh the benefits of replacing them. Risks inherent with disturbing airplane wiring and other permanently installed systems, particularly on the scale contemplated by the proposed AD's, are of primary concern. This and other related risks should be addressed using a structured method that considers the characteristics of MPET and alternative films, design and operation of overlying systems, susceptibility of those systems to damage during the replacement of insulation under proposed methods, and likely effects of any damage to those systems. One commenter states that the proposed AD's are not supported by such an analysis.

The FAA does not concur that a formal risk assessment is necessary. If accomplished properly, the replacement required by this AD will not disrupt wiring in such a way as to adversely affect safety. Generally, the prototype exercises demonstrated that the required replacement can be accomplished safely. In addition, Boeing is revising the referenced service bulletins to provide additional guidance on techniques to ensure safe replacements. The primary reason for providing an extended compliance time for this AD, as discussed under the next heading, is to ensure that operators have adequate time to accomplish the replacements properly. On the other hand, MPET insulation blankets have been shown to create an unsafe condition that must be corrected. Furthermore, the FAA will require any operator/modifier that develops its own installation data to include specific instructions to ensure that any displaced wires, systems, and installations are in an airworthy condition after accomplishment of the required replacement. The FAA will monitor these areas of concern during the accomplishment of the insulation blanket installations. Finally, if

operators can show that removal and replacement of MPET insulation blankets in certain areas of an airplane will create a greater risk of an unsafe condition than leaving the MPET blankets in place, the FAA will consider requests that provide an acceptable level of safety under the provision of paragraph (e) of the final rule. Any request to leave MPET insulation blankets installed in an airplane must provide justification that the identified unsafe condition has been minimized and that an acceptable level of safety is maintained.

One commenter states that the proposed AD's should be rewritten to limit the blanket replacement to areas of high risk, or conversely, retain existing blankets in areas with no wiring or with wiring deemed to pose little or no hazard.

The FAA does not concur. No technical justification, criteria, or data were submitted to support the commenter's request. Potential ignition sources exist throughout the airplane and insulation blankets constructed of MPET film material are located throughout the airplane. It is, therefore, extremely difficult to identify high risk areas and areas of little or no risk. The FAA finds that MPET insulation blankets in all areas of the affected airplanes must be addressed.

One commenter states that the requirements of the proposed AD's should be recast into phases so as to first respond across the worldwide fleet of affected airplanes to the areas of highest perceived risk. Thereafter, the areas of lesser perceived risk can be dealt with at a more appropriate pace. Targeting the highest perceived risk areas of the worldwide fleet of affected airplanes first would provide the greatest decrease in risk across the fleet most quickly. This approach also would make the best use of limited resources, lessen the substantial adverse impact to the traveling public of excessive fleet groundings, and somewhat reduce the substantial economic burden to the airlines.

The FAA does not concur with the commenter's statement that the requirements of the final rule should be recast into phases. As discussed above under the heading ''Unsafe Condition,'' potential ignition sources exist in many areas of the affected airplanes. It is difficult to identify high risk areas and areas of little or no risk. Therefore, the FAA finds that MPET insulation blankets in all areas of the affected airplanes must be replaced. With the change in the compliance time from 4 to 5 years in this AD, excessive fleet grounding should not take place. Adequate maintenance facilities are available to complete this action within the required time period.

Compliance Time for Proposed Replacement of MPET Insulation Blankets

Several commenters request that the compliance time for accomplishing the proposed replacement of the MPET insulation blankets be extended from the proposed 4 years to a range of 5 years to 8 years. The commenters state that such an extension will allow the replacement to be accomplished during a regularly scheduled ''D'' check or heavy maintenance visit, thereby eliminating any additional expenses that would be associated with special scheduling. The commenters express a concern about the availability of facilities and trained personnel, either domestically or offshore, to accomplish tasks of this magnitude.

One commenter states that maintenance planning can only be done effectively once all details of the work to be accomplished and all downtimes needed to perform the work are known in detail. Therefore, the compliance time should only start once all these details have been clarified.

One commenter states that the proposed AD's do not provide sufficient time for accomplishment of the prototyping effort. Wholesale removal or relocation of wiring not designed for removal in areas where access is difficult can lead to incidental damage even with the best maintenance practices. Given the problems of access, multiple blanket sections will now be required in many fuselage areas to replace a single original blanket. This will lead to new designs, templates, and part numbers. The commenter concludes that this cannot happen in an orderly fashion without completing a prototyping effort on at least one airplane.

The FAA concurs that an extension to the compliance time is warranted. The FAA's intent was that the replacement be conducted during a regularly scheduled maintenance visit for the majority of the affected fleet, when the airplanes would be located at a base where special equipment and trained personnel would be readily available, if necessary. Based on the information supplied by the commenters, the FAA now recognizes that 5 years corresponds more closely to an interval representative of most of the affected operators' normal maintenance schedules. The FAA finds that a 4-year compliance time would have a significant impact on scheduling and cost and might result in hurried accomplishment of the required replacement, which could result in potential damage to associated wiring. This decision is supported by experience from the prototype installations, which demonstrated that the required replacement procedures are complex in some areas, and that adequate time and facilities are necessary to ensure that they are completed safely and correctly. Paragraphs (a) and (c) of the final rule have been revised to reflect a compliance time of 5 years. The FAA does not consider that this extension will adversely affect safety.

One commenter supports the proposed 4-year compliance time for accomplishing the proposed replacement of the MPET insulation blankets. The commenter states that, while some operators feel it is not a practical time period, the proposed compliance time is reasonable and practical to retrofit all of the affected airplanes, utilizing airline and third party maintenance facilities. The commenter also states that it and other materials manufacturers are fully prepared and have the capacity to support this effort. Another commenter states that the proposed 4-year compliance time is a very generous allotment of time and would not want to see the proposed AD's delayed any further.

The commenters did not provide any data to support their position. For the reasons described previously, the FAA finds that a 5-year compliance time is reasonable and practical to retrofit all of the affected airplanes rather than the 4-year compliance time proposed by the original NPRM and supplemental NPRM.

Two commenters request that the compliance time for accomplishing the proposed replacement be shortened. One commenter states that the proposed compliance time of 4 years is too lengthy given the fire hazard introduced by MPET insulation blankets. The second commenter states that quicker action is necessary if the conditions of the wiring on affected airplanes are anything like what was discovered in the 737's emergency grounding issue of May 98, wires found damaged on the Space Shuttle Columbia, or numerous instances of wire insulation failure coming out of the Aging Transport Systems Rulemaking Advisory Committee (ATSRAC)/ASTF inspections (15 service bulletins upgraded to alert status on Model MD–11 series airplanes alone) or alert service bulletins on the 727's.

The FAA does not concur with the commenter's request to shorten the

compliance time. As discussed previously, the FAA considered the safety implications, parts availability, and normal maintenance schedules for timely accomplishment of replacement of the MPET insulation blankets. In consideration of all of these factors, the FAA determined that the compliance time, as revised, represents an appropriate interval in which replacement of the MPET insulation blankets can be accomplished in a timely manner within the fleet and still maintain an adequate level of safety. The FAA encourages operators to accomplish this modification as soon as possible. The commenter points out several incidents associated with airplane wiring. The FAA is addressing these issues as they are identified. The commenter is correct that these wiring incidents are the focus of ATSRAC and ASTF activity. However, these wiring issues are not the subject of this AD.

One commenter requests that the FAA consider a 4-year compliance time to accomplish the proposed replacement only in areas that are readily accessible (i.e., areas where extraordinary means are not required to gain access). The MPET insulation blankets for certain defined areas of the cockpit and electronics bay(s) should not be replaced or should be replaced when those areas are made accessible. The commenter states that replacement of 98 percent of the insulation on the affected airplanes will provide an equivalent level of safety to those airplanes not affected by the proposed AD's. Considerable time will have to be added to the proposed compliance time to accommodate a complete replacement without forcing some airplanes to be grounded due to lack of maintenance capacity.

The FAA does not concur with the commenter's request to require a compliance time of 4 years only for replacement areas that are readily accessible. Although the prototype installations have shown that accomplishment of the required replacement in the cockpit and electronic compartment is physically challenging, potential ignition sources and the identified unsafe condition exist in areas that are not readily accessible. Therefore, the FAA finds that MPET insulation blankets in all areas of the affected airplanes must be replaced. However, as discussed previously, the FAA has extended the compliance time for the required replacement from 4 years to 5 years. While not intended to address the issue of inaccessible areas, the extension of the compliance time by one year should help alleviate the concern for grounding of airplanes due to lack of maintenance capacity.

Two commenters request that the FAA ensure that sufficient insulation material of appropriate quality is available. Supply shortages could create conditions in which the work needs to be performed under time pressure. One commenter notes that there is only one blanket covering material that is currently approved, and only one qualified test apparatus available for operators to perform American Society for Testing and Materials (ASTM) E648 tests on other products. The commenter also notes that the airplane manufacturer has stated that it has only one qualified supplier for manufactured blankets. The commenter is uncertain if the blanket manufacturer can meet replacement demands within the proposed 4-year compliance time. Furthermore, the commenter states that there are no dimensioned drawings available to 14 CFR part 121 operators who might plan to fabricate their own blankets. Templates must be plotted and obtained from the airplane manufacturer, which is a time consuming process.

Various insulation blanket material suppliers state that there is no cause for concern over the availability of the materials specified in the proposed AD's. Metallized Tedlar™ (i.e., polyvinylfluoride), polyimide film, Tedlar™ and polyimide tapes, and fiberglass are abundant and are readily accessible to support all retrofit requirements.

The FAA has assessed the availability of materials required by this AD and has determined that required materials and manufacturing sources should be available for modification of the U.S. fleet within the 5-year compliance time. The FAA encourages operators to review their airplanes to assess their individual needs for materials and plan accordingly. The FAA anticipates that operators will accomplish the requirements of this AD at the earliest practicable maintenance opportunity to lessen the burden toward the end of the compliance time. In addition, the airplane manufacturer is preparing installation kits that can be utilized to accomplish the required replacement. Also, operators and modifiers have developed and are continuing to develop their own data (templates and drawings) to accomplish this required replacement. While this may be a time consuming process for some, it can be accomplished.

Inadequate Procedures and Information in Referenced Service Bulletins

Several commenters state that the replacement procedures and information specified in the referenced service bulletins (i.e., McDonnell Douglas Service Bulletins MD–90–25–015, Revision 01, dated November 5, 1997; MD80–25–355, Revision 01, dated November 5, 1997; DC10–25–368, dated October 31, 1997; and MD11–25–200, Revision 01, dated March 20, 1998) are inadequate for reasons discussed below.

Several commenters state that the Accomplishment Instructions of the referenced service bulletins address the fabrication of insulation blankets but provide no instructions for installation. Detailed instructions for installation are essential to avoid risks during installation, particularly in crucial areas where wiring or other systems are densely concentrated. Damage to installed systems can result in latent failures of critical flight systems and generation of electrical ignition sources. The unprecedented scope of the work involved in moving and replacing wires and systems, and the fact that nothing similar has ever been attempted, introduce a new and unquantified amount of risk.

One commenter states that Boeing has acknowledged that instructions to remove and reinstall some equipment racks and related structures, which are necessary to accomplish the proposed replacement, do not exist in current maintenance documents and will need to be developed. Specific aspects of the proposed replacement are beyond the scope of any currently authorized maintenance procedures. The members of the Boeing Recovery and Modification (RAM) Team are the only personnel trained and authorized to disassemble and reassemble certain critical areas. Several commenters state that Boeing is planning to issue revised service bulletins around June 2000. One commenter states that Boeing should issue detailed service bulletins to cover the scope of the NPRM's and all related test criteria and requirements associated with insulation blanket replacement and removal/installation of associated equipment/components. One commenter states that the service bulletins should be revised to include the above information.

The FAA acknowledges that the instructions appear to be generic, without reference to specific locations in the airplane. However, it is still possible to complete the replacement required by this AD by developing the necessary installation data in conjunction with existing maintenance

procedures. Since the issuance of the NPRM's, the manufacturer, in conjunction with operators, has completed prototype installations. Based on the results of the prototype, the manufacturer is developing revisions to the referenced service bulletins that will contain additional installation information and instructions. These revised service bulletins are scheduled for completion in June 2000. Any new or revised service bulletins will contain procedures to maintain/test the integrity of the wiring after accomplishment of the replacement of any MPET insulation blanket. The FAA is planning to review and approve the revised service bulletins under the AMOC provision of paragraph (e) of the final rule.

In addition, the FAA is aware that certain operators and modifiers are developing their own installation data. The FAA may approve requests for an AMOC under the provisions of paragraph (e) of this AD if sufficient data are submitted to substantiate that such a design change would provide an acceptable level of safety.

The FAA does not concur with the commenter that the members of the Boeing RAM team are the only personnel that can address certain areas of the airplane. The FAA finds that many operators have the expertise to accomplish the required replacement. In addition, Boeing intends to include the necessary instructions in the revised service bulletins.

Several commenters state that the referenced service bulletins not only refer to materials tested in accordance with Standard Test Method ASTM E648 and approved by the FAA as a method of compliance with the requirements of the proposed AD, but also refer to materials that do not meet the new requirements. Moreover, other materials acceptable for compliance with the requirements of the proposed AD are not listed in the referenced service bulletins.

The FAA concurs that the referenced service bulletins refer to materials that do not meet the requirements of this AD. When the referenced service bulletins specified in the NPRM's were issued in 1997, the insulation blanket film material listed in those service bulletins were considered acceptable for installation. Since the issuance of those service bulletins, however, only one of the two metallized Tedlar™ covers specified in the referenced service bulletins has been demonstrated to be acceptable for compliance with the replacement requirements of paragraph (c) of this AD (as indicated in NOTE 4 of the AD) based on flammability testing using the criteria specified in the final rule. The revised service bulletins will only list material that has been approved by the FAA. Under the provisions of paragraph (c) of this AD, the FAA may approve other film material that is shown to meet the flammability test method specified in the final rule. Also, under the provisions of paragraph (e) of this AD, the FAA may approve requests for approval of an AMOC for insulation blankets other than those specified in the service bulletins referenced in the final rule that are shown to meet the flammability test method specified in the final rule and all other airworthiness regulations.

Several commenters state that, due to age, identification stamps on the MPET insulation blankets may be unreadable. The referenced service bulletins are missing instructions for determining whether such blankets are constructed of MPET.

Although the referenced service bulletins are missing instructions for determining whether insulation blankets are constructed of MPET, the FAA finds that such a determination can be made without such instructions. MPET insulation blankets are extremely shiny when compared to all other insulation blanket cover material, and can be readily recognized by trained maintenance personnel. It is also possible to use known MPET material as a comparison sample to assist in the identification should the markings not be readable. Paragraph (a) of the final rule has been revised to clarify the method of identifying MPET. MPET insulation blankets can be identified by the following markings: (1) DMS 2072, Type 2, Class 1, Grade A; (2) DMS 2072, Type 2, Class 1, or (3) DMS 1996, Type 1. The FAA has revised NOTE 2 of the final rule to clarify these markings.

Several commenters state that the referenced service bulletins specify the least effective method for the fabrication of new insulation blankets. Few operators are equipped or have the capability or capacity to manufacture their own blankets. Four sources of insulation blankets were evaluated in technical meetings with the manufacturer. Of these four sources, operators viewed blankets provided in kits by the manufacturer as the most efficient and practical. Such kits would facilitate the earliest completion date of a replacement program, would preserve the thermoacoustic characteristics of insulation systems and certificated configuration of affected airplanes, and can be supported according to the manufacturer. In addition, no dimensional blanket drawings and templates for making the blankets are available.

Although the method for fabrication of new insulation blankets specified in the referenced service bulletins may not be the most efficient method for the commenters, the FAA finds that it is possible to develop the necessary data to manufacture blankets in accordance with the instructions of the referenced service bulletins. The FAA is aware that Boeing is developing replacement kits. The information necessary to purchase these kits will be included in the revised service bulletins (as discussed previously). However, the revised service bulletins are not scheduled to be completed until June 2000. The FAA has decided not to delay this action in anticipation of the service bulletins, since the release date is not absolute and this action is necessary to address an identified unsafe condition. Therefore, the FAA may approve requests for an AMOC under the provisions of paragraph (e) of this AD once the revised bulletins are issued.

In addition, the FAA acknowledges that templates may not be available for operators to make new insulation blankets. However, the referenced service bulletins do describe procedures for removing the subject insulation blankets and using those blankets as templates for making new insulation blankets. While some operators may not be equipped or may decide not to manufacture the replacement blankets, there are adequate resources available in the industry to accomplish the manufacturing.

Several commenters state that the referenced service bulletins provide no labor estimates. One commenter states that is not aware of any large transport category airplane that has been removed from service, has had its insulation replaced, and has been returned to service. This lack of experience and labor estimates from the manufacturer would impair the planning required of operators and their ability to provide accurate comments to the proposed AD's.

The FAA does not concur. The FAA acknowledges that the referenced service bulletins do not provide labor estimates. However, as indicated under the heading ''Regulatory Evaluation Summary'' in the preamble of the NPRM's and supplemental NPRM's, a Preliminary Cost Analysis and Initial Regulatory Flexibility Analysis to determine the regulatory impacts of the proposed AD's were included in the Rules Docket No.'s 99–NM–161–AD and 99–NM–162–AD. A summary of those analyses was contained under that same heading in the preamble of the NPRM's

and supplemental NPRM's. In addition, the manufacturer, operators, and modifiers have developed estimates based on the prototype installations completed to date. (The FAA discusses the comments to the cost estimate of the proposed AD's in more detail, below, under the heading ''Regulatory Evaluation Summary.'')

In response to the original NPRM's, several commenters state that the manufacturer has indicated that the airplane effectivity in the referenced service bulletins is currently being re-evaluated and may be revised substantially. This lack of accurate airplane effectivity also would impair the planning required of operators and their ability to provide accurate comments.

The FAA concurs that the effectivity listed in the service bulletins is not correct. As indicated under the heading ''Differences Between the Proposed AD and Service Bulletins'' in the preamble of the NPRM's, the FAA realizes that the effectivity listing of the referenced service bulletins not only includes airplanes manufactured with MPET insulation blankets, but airplanes equipped with other materials that are much more difficult to ignite than MPET. The FAA has determined that only airplanes manufactured with MPET insulation blankets are subject to the identified unsafe condition. Therefore, paragraph (a) of the AD's requires that a determination be made of whether, and at what locations, MPET insulation blankets are installed. In addition, the applicability specified in the final rules, based on the supplemental NPRM's, includes fewer airplanes than specified in the service bulletins. In addition, the applicability statement of the final rule, Rules Docket No. 99–NM–162–AD, has been revised to clarify the airplanes that are subject to the identified unsafe condition, which is discussed below, under the heading ''Revise Applicability of Proposed AD.''

Several commenters state that some accessibility issues have not been addressed. One commenter requests that the removal/replacement requirements be re-evaluated to exclude replacement insulation blankets in those ''inaccessible places'' of the airplanes. Three to four percent of the MPET insulation blankets are buried beneath structure and wiring in areas like the electrical and equipment (EE) bay and the flight deck and will require as much as 70 percent of the total man hours to replace.

The FAA does not concur that replacement of MPET insulation blankets should not be required in ''inaccessible'' areas. The areas identified by the commenters (i.e., the EE bay and flight deck) are areas where potential ignition sources (*i.e.,* electrical arcing) are likely to exist and are, therefore, susceptible to the identified unsafe condition. During the prototype exercises and subsequent inspections of the EE bay and flight deck, the FAA learned that most Model DC–9–80 and MD–90–30 series airplanes do not have MPET insulation blankets in these areas. It is, however, the operator's responsibility, as required by paragraph (a) of this AD, to determine whether, and at what locations, MPET insulation blankets are installed in each airplane. Therefore, contrary to the commenters' assertion, the total labor costs associated with replacement of the MPET insulation blankets in the EE bay and flight deck will not be the most significant portion of the total cost of the AD.

One commenter requests that the FAA revise the proposed AD to incorporate specific references to industry guidance material on wire inspection and disturbance. As a minimum, such references should include Advisory Circular 25–16, ''Electrical Fault and Fire Protection and Prevention.''

The FAA does not concur. Operators and modifiers should be aware of the existing guidance and the revised service bulletin instructions (discussed above), which, based on the prototyping that has been accomplished, will specify wiring inspection information that may be needed.

One commenter requests that the FAA develop and require post-modification wiring inspections to verify the integrity of the wiring insulation. The FAA concurs that any damage done to wiring or other components in the course of the required replacement needs to be corrected. In fact, if maintenance personnel are aware of damage, whether or not caused by replacement of the MPET insulation blankets, they are obligated to document it and initiate appropriate corrective action. Operators are required by 14 CFR parts 91, 121, and 135 to maintain their airplanes in an airworthy condition after any alteration or repairs are made to the airplane. Also, based on the prototyping that has been accomplished, the revised service bulletins will provide any specific wire integrity inspection that may be needed. Therefore, no change to the final rule is necessary.

Coordination With Wiring AD's

Several commenters state that they understand that other NPRM's are in the development phases, which would require inspection of airplane wiring, and would deal with the same issues that have brought about the subject proposed AD's. Some of these commenters state that these NPRM's should not be developed, mandated, and undertaken separately, but rather should be part of a carefully thought out and coordinated process and program. A properly developed plan must consider that each time such disruption of airplane wires/systems takes place, there is an increasing opportunity for collateral damage to those wire/systems with unknown future safety implications. Such a plan also should recognize that the insulation proposed to be changed is not really the source of any fire problem and that proper rectification of the issues being considered might better lie in a carefully thought out and researched wiring AD. One commenter states that it would be efficient to combine the requirements of the proposed AD's with the wiring requirements that will be proposed soon. One commenter states that Boeing is developing several service bulletins dedicated to the inspection and maintenance of airplane wiring. However, these service bulletins will not be available in time to coincide with the insulation blanket replacement should the current NPRM's, with their proposed timing, become law.

The FAA does not concur that AD's addressing specific unsafe wiring conditions should necessarily provide for compliance times that are concurrent with this AD. In some cases, the corrective actions for those unsafe conditions are simple maintenance actions that can be accomplished quickly. It would be inappropriate to allow those unsafe conditions to continue during the extended compliance time allowed by this AD. The FAA does concur that any AD's addressing general wiring inspections for unsafe conditions would be best accomplished in conjunction with the replacement of MPET insulation blankets in affected areas. Such coordinated actions would certainly be most efficient for operators. The FAA does not concur with the commenters' request to combine the requirements of this AD with any proposed actions to address general wiring issues. Such action may delay correction of the unsafe condition of this AD by extending the compliance time further. The FAA will take into consideration the compliance time of this AD in any future action for general wiring inspection to minimize the duplication of aircraft downtime associated with accomplishing the actions of this AD.

Revise Applicability of Proposed AD

One commenter notes that paragraph (a) of the proposed AD states ''. . . determine whether, and at what locations, insulation blankets constructed of MPET are installed. This determination shall be made in a manner approved by the FAA.'' The commenter states that this wording is very unclear to operators and that the FAA should coordinate with Boeing to determine more precisely what the applicable airplanes are.

Based on the commenter's statement that ''the FAA should coordinate with Boeing to determine more precisely what the applicable airplanes are,'' the FAA finds that clarification is necessary. After inspecting in-service airplanes, the FAA has determined that all affected airplanes may not have MPET insulation blankets throughout the fuselage. Some airplanes may have very little MPET insulation blankets installed and others may have 100 percent installed. The FAA also has determined that, based on the manufacturer's records alone, it is not possible to determine precisely the configuration of each individual airplane. Therefore, paragraph (a) of the final rule requires that operators determine whether, and at what locations, insulation blankets constructed of MPET are installed. If MPET insulation blankets are not installed, no further action is required by this AD.

The manufacturer states that it is continuing to verify the actual extent of MPET-covered insulation on airplanes delivered from the factory. In response to the original NPRM's, the manufacturer states that additional Model DC–9–87 (MD–87), DC–10, and MD–11 series airplanes, and KC–10A (military) airplanes need to be included in the applicability of the NPRM's, and at least some Model DC–9 series airplanes should be excluded. When that effort is complete, the manufacturer states that it will issue new service bulletin information. One commenter states that the applicability statement of NPRM, Rules Docket No. 99–NM–162–AD, is incorrect. The commenter states that the manufacturer has indicated that MPET insulation blankets were used on Model DC–10 series airplanes, fuselage numbers 359 through 381 inclusive, and 432 through 436 inclusive, and Model MD–11 series airplanes, fuselage numbers 447 through 602 inclusive. In addition, MPET insulation blankets were used on ducting installed in Model MD–11 series airplanes, fuselage numbers 603 through 632 inclusive.

The FAA acknowledges that the applicability statement of the original NPRM's was incorrect. Following the issuance of the NPRM's, the FAA identified additional airplanes that were subject to the identified unsafe condition and issued supplemental NPRM's to reopen the comment period to provide additional opportunity for public comment. The applicability statement of the supplemental NPRM's included the fuselage numbers of the airplanes the commenter referred to above.

One commenter states that the applicability statement of supplemental NPRM, Rules Docket No. 99–NM–162–AD, is incomplete. The commenter notes that it operates four Model DC–10–15 series airplanes, three of which fall within fuselage numbers 359 through 632 inclusive (i.e., fuselage numbers 362, 365, and 374), which were manufactured between June 1981 and January 1982. The commenter requests that the applicability statement of the supplemental NPRM be revised to include Model DC–10–15 series airplanes. The FAA concurs. The applicability statement of the subject supplemental NPRM correctly references the specific manufacturer's fuselage numbers of all affected airplanes, including those fuselage numbers for Model DC–10–15 series airplanes. Therefore, the FAA finds that it is necessary to revise the applicability statement of the subject final rule to include all affected series of Model DC–10 airplanes, specifically Model DC–10–10F, DC–10–15, DC–10–30, DC–10–30F, and DC–10–40 series airplanes.

One commenter requests that the applicability of NPRM, Rules Docket No. 99–NM–161–AD, be revised to ''[m]anufacturer's fuselage number 1011 through 2241 inclusive; certified in common carriage operations.'' The commenter states that private operators were not considered when studying the effects of the proposed AD's. Private operators who operate under 14 CFR 91.501 need to be separately considered when they are faced with rules that are directed at air carriers. Transport category ''Private Carriage'' operators, who operate under 14 CFR 91.501, are part of the general aviation population and do not offer service to the public or a segment of the public. General aviation operators' airplanes are not held (and are not expected to be held) accountable to the same regulation standards as ''Common Carriage'' operators. The commenter also states that significant differences in airplane utilization, interior, and operation make the likelihood of in-flight fire threat due to MPET insulation blankets on ''Private Carriage'' airplanes extremely remote. Therefore, the exclusion of ''Private Carriage'' airplanes from the applicability of this NPRM would not jeopardize public interest.

The FAA does not concur with the commenter's request to revise the applicability of the subject rule as stated. The identified unsafe condition and potential consequences addressed by this AD are not any different for airplanes utilized in private operation versus ones operated in common carriage.

One commenter states that the proposed AD's do not address affected airplanes outside the noted applicability that may have been retrofitted with MPET insulation blankets during service. This implies that the FAA's investigation has determined that small amounts of MPET on those airplanes do not pose an unsafe condition.

Regarding post-delivery installation of MPET, the FAA does consider that such insulation is unsafe. Most operators do not retain records identifying on what airplanes such insulation has been installed. Therefore, to address this unsafe condition, an AD would have to require that all operators inspect all airplanes of any type to identify the relatively small amount of such insulation that may have been installed during post-production maintenance. The FAA does not consider that such a requirement would be practical or cost effective. However, as with any other unsafe condition, when an operator becomes aware that MPET insulation blankets have been installed, the material should be removed to maintain the airplane in an airworthy condition.

Flammability Test Method Not Adequately Developed/Defined

Several commenters state that the proposed test method seems insufficiently developed to be considered the new standard flammability test. The commenters addressed several issues, including:

- The validity of the test method;
- Qualification of the test method;
- Details of the test procedures; and
- Materials and approval process.

Validity of Test Method

One commenter notes that it has built a test unit and conducted tests on it. The commenter has verified the results of the FAA Technical Center tests, but believes there are serious limitations on this test's utility for predicting how insulation coverings will burn when in place on an airplane. In addition, the commenter states that the mechanism by which films can pass the Radiant Panel Test is for the material to shrink

away from the heat source. Other materials, such as polyimide film, pass the Radiant Panel Test by not igniting and shrinking away from the heat source. Two other commenters state that the best of Tedlar™ and Mylar™ (*i.e.*, polyethyleneteraphthalate) films shrink away in the presence of flame and are no help at all in containing fire. The Tedlar™ material that passes the test shrinks away from the heat source before the ignition source can be applied to the surface of the test material. Thus, there is no material to ignite. The commenter states that the Radiant Panel Test may not replicate the condition on an airplane where blankets are restrained and multiple layers are often part of the blanket construction.

The commenter further states that it is possible for polyethyleneteraphthalate (PET), MPET, or other plastics that are more combustible than Tedlar™ to pass ASTM E648, if treated to have desirable heat shrink characteristics. The only other requirement for insulation coverings is the 12-sec vertical burn, which is recognized as inadequate because MPET materials can pass it. The commenter notes that the proposed standard may leave the door open in the future for combustible materials to be installed on airplanes.

The FAA does not concur with the commenter's statement that films can pass the Radiant Panel Test by shrinking away from the heat source and are no help in containing a fire. The purpose of the test is to establish the flame spread characteristics of insulation blanket materials under realistic conditions. The results of this test have been correlated with full-scale testing, conducted by the FAA Technical Center, in which insulation was installed in fuselage sections in a representative fashion. Certain materials that shrink when exposed to heat have been shown to prevent propagation of a fire. In addition, for these same reasons, the FAA does not concur with the commenter that the FAA Technical Center tests have serious limitations. The FAA finds that the insulation material tested in accordance with the method specified in the AD will have much better flame spread characteristics than MPET, which was shown to comply with the current Bunsen Burner Test specified in the regulations, and subsequently, determined to have unsafe flame spread characteristics when ignited from a small ignition source.

One commenter states that the best situation is to have insulation covering film that does not burn in the Radiant Panel Test. The commenter contends that the test should screen out material that does not perform as well as polyimide film.

The FAA does not concur that the test method must screen out materials that do not perform as well as polyimide films. As discussed previously, materials, including polyimide films, that pass the Radiant Panel Test perform much better in full-scale testing than MPET insulation blankets that are the subject of this AD.

Qualification of the Test Method

One commenter expresses concern that the FAA has not yet published updated flammability standards that will allow for the development and testing of materials other than those cited in previous McDonnell Douglas service bulletins, which specify the replacement of MPET with two types of metallized Tedlar™. The commenter notes that the FAA has approved only one type of specified metallized Tedlar™ after it successfully passed an ASTM flame spread test. The commenter emphasizes that it is urgent that the FAA provide its own applicable test standard to facilitate the rapid replacement of MPET with other materials that will have superior fire resistant characteristics.

One commenter requests that the FAA revise the proposed AD's to ''more clearly require the FAA Radiant Panel Test, which was derived from ASTM E648,'' and to define the test before approving specific films. The commenter states that ASTM E648 is much different than the Radiant Panel Test developed by the FAA Technical Center. The Radiant Panel Test uses the same enclosure, a radiant panel, and the same basic concept as the ASTM E648 test. However, the Radiant Panel Test has had several modifications including a different heat flux, different ignition source, and a modified sample holder. The commenter notes that results of the Radiant Panel Test vary widely when test specifications are changed. Therefore, the specification of any film as passing the test prior to the completion of the test method is not warranted. It is possible for films that currently fail the existing test to pass when the test procedures or chamber is fully defined. Conversely, films that currently pass the test can fail.

One commenter states that industry experts should discuss the success criteria of ASTM E648 further. This commenter notes that these changes to the standard and success criteria have not been subject to round robin testing and outside peer review, so various aspects of their merit are questionable. One commenter suggests that round robin testing with clearly identifiable/achievable pass/fail criteria be performed by the industry to validate the repeatability of the test procedures prior to release of the proposed AD's. Validated criteria would produce an equivalent level of safety to material currently in production and in use in the fleet, which is deemed acceptable.

The FAA concurs with the commenters concerning the reference to ASTM E648 in the NPRM's and finds that clarification is necessary. The FAA has been developing for some time new flammability standards for insulation material. Research has been conducted on the various types of insulation material to determine their effectiveness on both flame spread and fuselage burnthrough. As a result, the FAA has developed a new flame spread test method. The flame spread test method specified in this AD is a modified version of the ASTM E648 flammability standard and test apparatus. Modifications to ASTM E648 test apparatus have been made to more closely reflect the fire conditions in an airplane environment. The FAA has prepared a document to reflect the flame spread test method to be used for testing of replacement insulation blankets for this AD. It is identified as ''Test Method to Determine the Flame Spread Characteristics of Thermal/Acoustic Insulation Material for Replacement of MPET.'' For the purposes of correcting the identified unsafe condition of this AD, the FAA finds that this flame spread test method is sufficiently developed.

The FAA also has developed a procedure for utilizing the FAA Technical Center flame spread test apparatus to qualify materials for this AD. The procedure for utilizing the test apparatus of the FAA Technical Center is identified as ''Ground Rules for Use of Technical Center Facility for Testing.''

The flame spread test method and procedure for using the FAA Technical Center test apparatus are both included in Appendix 1 of this AD.

As paragraph (c) of the NPRM's is currently worded, some commenters may misinterpret that the replacement insulation blankets must be constructed of materials tested in accordance with the original ASTM E648 flammability standard, rather than tested in accordance with a new flame spread test using an apparatus derived from ASTM E648 in accordance with a method approved by the FAA. Paragraph (c) of the final rules has been revised to clarify the flame spread test method for replacement insulation blankets. The Los Angeles Aircraft Certification Office (ACO) will work closely with other FAA

ACO's and the FAA Technical Center to assist operators/modifiers in qualifying new materials for compliance with the requirements of this AD.

The FAA concurs that the method specified is not yet a ''standard.'' However, the method is sufficiently developed for this AD and, before adoption as a standard, will undergo the kind of industry qualification proposed by one commenter. The FAA partially concurs with the commenter's statement that round robin testing is necessary and that the success criteria of the flame spread test method should be discussed further. Prior to incorporation of a new flame spread test method into the Airworthiness Standards for transport category airplanes (14 CFR part 25), the test method will be subject to round robin testing. In fact, this process is currently underway within the International Aircraft Materials Fire Test Working Group.

With respect to changes in the flame spread test method that may cause certain materials to go from acceptable to unacceptable, or vice versa, the FAA does not agree that this is an issue. Refinements to the test method will be made to improve the repeatability of the test, not to change the test results. Materials that are marginal will perform marginally regardless of the details of the method.

One commenter states that it understands that the FAA has plans to replace the standard gas-fired radiant panel with an electric panel, and that the flame ignition source is a single cone non-standard burner as opposed to the T-type burner method specified in ASTM E648. The commenter contends that differences between the FAA method and ASTM E648 are confusing to both testing labs wishing to provide services to FAA-regulated clients as well as suppliers of insulation who are unclear as to what the specification will be for the products they produce for the aerospace industry. The commenter states that ''specification of a non-standard test apparatus and conditions by the FAA end up creating a whole other set of devices which must be fabricated and maintained separately from their standard 'parent devices' removing the economic benefits which use of consensus developed public sector standards provide.''

The FAA does not concur for the reasons noted previously. In addition, since the apparatus specified is not used for any other aviation application, there is very little potential for confusion. The number of facilities currently equipped to conduct these tests is extremely small, which further diminishes any problems associated with differences in the test method.

One commenter states that, because of such a tremendously costly retrofit program, all further developments with regard to new testing methods must clearly avoid duplication or contradiction of actions as described in the proposed AD's.

The FAA has revised paragraph (c) of the final rule to clarify the flame spread test method to be used to qualify replacement insulation blankets. As previously discussed, this test method is adequately refined to qualify these materials for this AD.

Details of the Test Procedures

One commenter states that results of tests have shown that the thickness of the insulation has no impact on the performance of the film under test. Therefore, the commenter suggests that all samples be tested with two-inch thick insulation.

One commenter requests that the FAA develop specifications for environmental conditioning of samples since the absence of such requirements will significantly alter test results, in particular for ignition and flame spread sensitive materials such as faced insulation.

The commenter states that the proposed pass/fail criteria, including the minimum 2-inch burn length and 0 flame spread, are not easily measured or agreed upon. Several commenters state that clearer pass/fail criteria are needed. One commenter states that subjective assessment of test results in small scale fire testing is a constant, ongoing problem that should be avoided.

One commenter claims that the ''pilot'' burner arrangement called out in the FAA specification does not result in reproducible test results. Likewise, the ''pre-heat'' time between specimens and the time between sample insertion and flame application have not been defined. The commenter prefers a standard design and operation conditions and is unclear why the standard design has been modified.

The FAA does not agree that the current test method lacks reproducibility. Tests conducted at the FAA Technical Center and at other facilities indicate that the test is reproducible and repeatable. The FAA concurs with the commenter that a defined test protocol should be used when testing replacement material. The flame spread test method specified in the final rule does include the pass/fail criteria, environmental conditioning, and test specimen thickness. Issues such as the pilot burner arrangement will be the subject of further refinement before the test method is adopted as a regulatory standard, but are adequately defined for this AD.

One commenter requests that the test procedures include contaminated insulation blankets to simulate real world conditions. The commenter states that testing of pristine material may not provide sufficient assurance when within a few years the thermal blankets will be contaminated with solvents and other material. The FAA does not concur. While ''contamination'' might result in either detrimental or improved flammability performance, incorporation of generic ''contamination'' into a test requirement is not practical. Contamination is usually a localized phenomenon, and not spread uniformly throughout the airplane. Replacing the existing materials with materials that will not propagate a fire will confine a fire to the area of contamination and should prevent the fire from becoming a hazard. As with any material installed on an airplane, it is the operator's responsibility to ensure that the airplane remains in an airworthy condition.

The commenter further requests that the test procedures include ignition ''by these so-called, 'otherwise harmless electrical arcs.' '' The commenter states that the likelihood of thermal blankets propagating a fire will typically start with an electrical arc. Therefore, the resistance to an arc-tracking Kapton™ (i.e., polyimide) wire fire should be assessed. The commenter contends that this will give a clear indication of what the next flight crew might experience, rather than a Bunsen Burner or cotton swab test that doesn't relate to the real world conditions found on affected airplanes.

The FAA does not concur with the commenter's request to include electrical arcing ignition in the test procedures. Electrical arc tests were used to identify the unsafe characteristics of MPET in the course of research. The test method required by this AD is, in fact, a more severe measure of the materials' performance. There are materials that are not susceptible to ignition by electrical arcing that will not pass the test required by this AD. Therefore, the replacement of MPET insulation blankets in accordance with this AD will address the commenter's concern.

Approved Materials

Two commenters request that the FAA revise the proposed AD's to include an expanded list of approved films. Several commenters note that Kapton™ film installed 25 years ago on Model L–1011 series airplanes has

proven to outperform Tedlar™ and Mylar™ films in FAA tests, which measure the materials' ability to hold back flames. Two commenters state that all FAA testing, including burnthrough testing, have shown polyimide films to be superior. In addition, FAA Administrator, Jane Garvey, specifically mentioned Kapton™ film as being a material that would be ''grandfathered in'' in an October 14, 1998, announcement.

Two commenters state that the proposed AD's appear to preclude the use of polyimide (Kapton™) insulation covering film that has passed the new Radiant Panel Test.

The FAA does not concur with the commenters' request to revise NOTE 4 of the AD to include additional films. Except for the metallized Tedlar™ cover mentioned in NOTE 4 of the AD, currently, no other film has successfully passed the flammability testing in a manner approved by the Manager, Los Angeles ACO. However, the FAA is aware of various film materials that could be found to be acceptable replacement materials for MPET. Once these materials have successfully passed the flammability testing specified in the AD, they must be approved by the Manager, Los Angeles ACO. In addition to the flammability requirements, the material must be shown to meet all other applicable airworthiness requirements. The FAA Administrator did make an announcement in October 1998 that Kapton™ would be ''grandfathered,'' and that the FAA would not require that material to be replaced once is was installed. However, that announcement was made prior to the issuance of the NPRM for this final rule. This AD does NOT require Kapton™ to be replaced once it is installed; however, it does require testing and approval of any material, including Kapton™.

One commenter requests that the FAA revise NOTE 4 of the proposed AD's to read ''[t]he metallized Tedlar covers specified in the service bulletins must be tested to demonstrate compliance with the requirements of paragraph (c) of this AD.'' The commenter disagrees with the characterization that a particular cover material is considered acceptable with the requirements of paragraph (c) of the proposed AD's. The commenter states that the Thermal Acoustic Task Group, which was organized by the Fire (Safety) Test Branch of the FAA Technical Center to develop the new flammability requirements, did not begin to discuss the procedures for demonstrating compliance until a seminar was held on September 13 and 14, 1999. Because the release date of the NPRM's was before the seminar, no material could have been specified to be in compliance with the requirements of paragraph (c) of the NPRM's. The commenter states that, at the time of publication of the proposed AD's, compliance materials and methods had not yet been submitted under a Test Plan, conformity inspection of samples had not been completed, and properly witnessed testing had not taken place.

The FAA does not concur with the commenter's request to revise NOTE 4 of the AD as it suggests. The material that is listed in the service bulletins has been found acceptable by the FAA and was tested at the FAA Technical Center in a manner approved by the FAA, prior to the September seminar. The purpose of the seminar was not to develop test methods, but to introduce the method to the interested segment of the industry. Therefore, the timing of the seminar has no bearing on the approval status of the material. No change to the final rule is necessary.

Replacement Material Approval Process

One commenter notes that under the heading ''Differences Between the Proposed AD and Service Bulletins'' in the preamble of the NPRM's, it states ''* * * Only one of the two insulation blanket film materials specified in the service bulletins has successfully passed the testing of the ASTM flammability standard and has been found to be an acceptable replacement material for the MPET-covered insulation blankets. Other film material, such as certain polyimide and fluoropolymer composites, also have been successfully tested to ASTM E648 and could be found to be acceptable for compliance with the requirements of this proposed AD if presented to the FAA for approval. These materials are not listed in the service bulletins described previously.'' The commenter claims that the original equipment manufacturer (OEM) and certain operators are interpreting this statement as requiring a full Part Manufacturing Approval (PMA) and Supplemental Type Certificate (STC) approval process for blankets using films not in the referenced McDonnell Douglas service bulletins.

One commenter states that other new materials besides Kapton™ will become available in the near future for use as insulation coverings, and that the PMA/STC process is not designed for nor suited for purely materials testing. The commenter contends that using this process would add a great deal of unnecessary cost to the current approval process for new materials. Another commenter requests that the proposed AD be revised to include language describing a clear and abbreviated approval process for blankets utilizing new and less flammable materials.

The FAA does not concur with the commenter's request to include language describing the process for approval of replacement insulation blankets utilizing new and less flammable materials. The FAA approval process of replacing materials/installations is well established and known. Design approval can be obtained by an STC or PMA. It is the responsibility of the operators and modifiers to obtain such approvals for any proposed materials under paragraph (c) of the AD. The FAA may approve requests for AMOC's, such as alternative blanket installation, under the provisions of paragraph (e) of this AD if sufficient data are submitted to substantiate that such a design change would provide an acceptable level of safety.

The FAA has determined that an adequate supply of approved replacement materials will be available to comply with this AD in the time specified. Operators that choose to develop new or different materials must plan accordingly and obtain approval as previously stated. While the PMA or STC process may not seem to be cost effective for some operators, it is the proper approval method to assure all airworthiness standards are met.

Insulation Material on Other Aircraft

One commenter is not clear if the material used today on other Boeing airplanes is able to pass ASTM E648. The same commenter also states that the proposed AD's require full replacement of only MPET. The commenter is not clear what the rationale behind this decision is.

As discussed in the NPRM's, these AD's are intended to correct an unsafe condition by replacing MPET insulation blankets. MPET film differs from other films in use in that it is susceptible to propagation of a fire from a small ignition source. Other films, while not necessarily meeting the proposed test requirements, do not have this susceptibility. It is the susceptibility to small ignition sources that creates the unsafe condition. New standards for insulation materials in general may be similar to the requirements of this AD, but will be used to upgrade the level of safety, and not correct an unsafe condition.

Burnthrough

Several commenters request that the FAA revise the proposed AD's to make clear that airlines are permitted to install insulation that meets a burnthrough protection standard. Two commenters state that the proposed AD's appear to preclude the use of Curlon as a substitute for fiberglass to achieve burnthrough performance. One commenter states that Curlon material and many other materials recently developed could easily and economically provide double the level of protection of the current burnthrough time (*i.e.,* four minutes). Although the proposed AD's do not address the burnthrough safety threat, the commenters want to take this opportunity to achieve this important safety advance when replacing the insulation. The commenters reemphasize that this would simply be reinforcing the October 1998 announcement that Curlon would be one of the materials ''grandfathered in,'' if operators proceeded to install it voluntarily.

Two commenters request that the FAA revise the proposed AD's to include requirements for burnthrough protection from fuel fires on the ground for all affected airplanes. The commenters state that replacement of flammable insulation is an opportunity to install burnthrough protection. One commenter states that this should be the time to push the industry, as was done with the heat release requirements for interior materials a few years ago. Materials were not even available to meet the new FAA requirements, but the industry ''stepped up to the plate and we now are all safer as a result of this proactive approach.''

The FAA does not concur with the commenters' requests to include burnthrough requirements in the AD. While burnthrough protection is important to the overall fire resistance of airplanes following an accident, the actions required by this AD are intended to correct a known unsafe condition—insulation blankets constructed of MPET. The FAA does not consider that the degree of burnthrough protection provided by currently installed insulation constitutes an unsafe condition. Therefore, it would be inappropriate to issue an AD to require improvement in burnthrough protection. The new replacement insulation blankets required by this AD meet the test method specified in the final rule, correct the identified unsafe condition, and provide the level of safety required by 14 CFR part 25. The FAA encourages the installation of materials that meet additional standards such as fuselage burnthrough protection.

Trade Names

One commenter opposes the use of trade names in both the preamble and regulatory text of the proposed AD's and considers such references to trade names highly prejudicial to Chemfab, the manufacturer of Chemfilm. The commenter states that there is no need for brand name product identification and that this connotes not only FAA approval of, but also preference for, the identified product brand. Once the official ''seal of approval'' has been granted through the rulemaking process, other market entrants face a significant barrier in gaining customer acceptance simply because the identified product has been ''officially'' sanctioned.

Because of the publication and circulation of the proposed AD's, two commenters request that the FAA revise the proposed AD's to identify the manufacturer(s) and trade names of insulation blanket covering films that have met FAA requirements specified in the proposed AD's.

The FAA does not concur with the commenters' request to reference other trade name products in the final rules or to eliminate all references. Tedlar™ and Mylar™ are common trade names and this is the clearest way for FAA to communicate with affected operators. Except for the one metallized Tedlar™ cover mentioned in NOTE 4 of the AD, currently, no other film has been approved by the Manager, Los Angeles ACO. In addition, the airplane manufacturer is planning to list materials, once they have been tested and approved by the FAA, in the revised service bulletins (discussed previously under the heading ''Inadequate Procedures and Information in Referenced Service Bulletin''). Furthermore, the FAA finds that trade names such as of Mylar™, Kapton™, and Tedlar™ are well known and are accepted terminology in industry. The reference of these trade names in the AD's are not, in any way, an FAA endorsement of those products. Therefore, no change to the final rule is necessary.

Wiring

One commenter requests that flammability requirements for the sources of ignition (i.e., the wiring) for thermal blanket fires be stricter than the requirements for thermal blankets themselves. The commenter states that the 60-degree flame test—the only test required by the FAA for the wiring on commercial airplanes—should be replaced immediately with the vertical flame test as a minimum requirement, and that every type of wire insulation in all airplanes should have to meet it.

The FAA does not concur. The current flammability standard for wiring has not been determined to be inadequate. The actions required by this AD are intended to address an identified unsafe condition, which is that MPET-covered insulation blankets can contribute to the spread of a fire when ignition occurs from a small ignition source such as electrical arcing or sparking. As noted previously, the FAA has a major program underway to address issues related to airplane wiring and problems are being addressed as they are identified.

Corrosion Protection

One commenter states that for Model MD–11 series airplanes to be afforded the same corrosion protection offered by the OEM installation, any fabricated blankets must meet the original type design. The existing Corrosion Prevention and Control Program (CPCP) requirements are based on the performance of the insulation system. Any compromise or alteration will necessitate changes to the CPCP. Many insulation blankets cannot be installed as they originally were due to installation of overlying structure. Therefore, deviations to the type design will have to be approved by the OEM and FAA in the form of an AMOC. The burden of these approvals will stress the resources of the OEM and FAA over the duration of the compliance period.

The FAA does not concur. The FAA is aware of the potential effects of changing insulation material has on the corrosion protection of the affected airplanes. The airplane manufacturer intends to take this into account so that no change to the CPCP is required. Any operator or modifier also will be required, under paragraph (e) of this AD, to address any ramifications to the CPCP in any request for an AMOC.

Add New Inspection

One commenter requests that, if it is determined that an insulation blanket is not constructed of MPET during the action required by paragraph (a) of the proposed AD's, a visual inspection be conducted to detect fire damage, electrical arcing, discoloration, or other physical damage. The commenter also requests a visual inspection for possible ignition sources during routine maintenance on airplanes not affected by the proposed AD's.

The FAA does not concur with the commenter's request to revise paragraph (a) of the final rule to include a visual

inspection for possible ignition sources. If any evidence of fire damage is found during the subject inspection, operators are already required to investigate and determine the source of the problem. This is no different from any other maintenance action that is performed by the operators. It is not necessary to include any additional requirements in this AD to accomplish this action.

Alternative Method of Compliance

One commenter states that it has developed a system whereby the existing bagged insulation can be removed from the airplane without the necessity of interfering with wiring harnesses or other unrelated systems. The commenter claims that its system would reduce the installation time of the proposed AD's, reduce the cost of compliance, and reduce the remote chances of creating future related AD's caused by the method of compliance. Another commenter states that it also has developed an insulation system that works around existing equipment and thus eliminates the need to remove much of the equipment that is not normally removed during heavy maintenance checks. The commenter claims that its system is lighter in weight than the OEM insulation system and will result in fuel savings.

One commenter agrees that the flammability/flame spread performance of the MPET-covered insulation blankets should be improved, but questions proposed AD's that would require blanket replacement. The commenter states that this approach may not be the only possible method of addressing the issue. This concept is especially important considering the potential negative consequences of required airplane disassembly to accomplish the blanket replacement. The commenter suggests that there may be other options such as spray coatings that offer virtually equivalent performance with little negative impact.

From these comments, the FAA infers that the commenters are requesting that the final rules be revised to include the commenter's systems for replacing or modifying the MPET insulation blankets. The FAA does not concur. The commenters did not provide any technical details for the FAA to make a finding. Paragraph (e) of the final rule contains provisions for requesting approval of an AMOC to address these types of unique circumstances.

One commenter requests that the FAA require installation of additional fire resistant material(s) between the insulation blankets and any adjacent wires, wire bundles, or other potential ignition sources instead of removing and replacing MPET insulation blankets. The commenter also requests that the FAA consider this approach on either a full or partial basis. Another commenter believes that fire resistant material(s) in such a location would better promote the overall safety of the affected airplanes.

The FAA acknowledges that this suggestion may be a possible acceptable alternative to removing the existing insulation blankets. However, no change to the final rule is necessary. Under paragraph (e) of the AD, operators may apply for the approval of an AMOC or adjustment of the compliance time that provides an acceptable level of safety.

Communication

One commenter requests that the FAA have a public meeting regarding the proposed AD's. The commenter states that, because many vendors are trying to develop materials that meet the new FAA requirements, and the market price of these materials seems to vary drastically at present, it just has insufficient information on new materials.

The FAA does not concur that a public meeting regarding the proposed AD's is necessary. Through the FAA Technical Center, the FAA has provided a forum to develop flammability standards for insulation materials. In addition, the FAA is aware of a number of meetings hosted by the airplane manufacturer to provide information to operators affected by the requirements of this AD. The FAA is sensitive of the public's concern with the fire safety issues associated with this AD and is aware of the effects this AD will have on operators. The FAA has determined that an unsafe condition exists, and that the actions required by this AD are necessary in order to ensure the continued safety of the affected fleet.

Extend Comment Period of NPRM's, Delay Issuance of Final Rules, and Withdraw NPRM's

For the reasons described above, several commenters request that the FAA do one or more of the following: (1) extend the public comment period for the NPRM's and supplemental NPRM's; (2) delay issuance of the final rules; or (3) withdraw the NPRM's and combine them with the draft burnthrough NPRM. (The FAA infers that the commenters are referring to a draft NPRM relating to insulation blanket flammability. The FAA announced its intention to develop new flammability standards for thermal/acoustic insulation in October 1998. This announcement included mention of improved burnthrough protection.)

One commenter states that it is not uncommon, in the case of an AD relating to issues not as complex as the proposed AD's, for the FAA to allow 90 days or more to comment. The 45-day comment period of the proposed AD's does not allow for proper understanding and evaluation on which to develop reasonable comments.

The FAA does not concur with the commenters' request to extend the comment period. On November 10, 1999, the FAA issued supplemental NPRM's to reopen the comment period for an additional 25 days to provide opportunity for public comment (the comment period for the NPRM's was 45 days and closed on September 27, 1999). The FAA finds that the public has had a reasonable opportunity to comment on the substance of the AD's. The FAA does not concur with the commenter's statement that it is not uncommon for the FAA to allow 90 days or more for the public to comment on proposed AD's. The standard comment period is 45 days for NPRM's and 25 days for supplemental NPRM's in which the FAA has responsibility as the State of Design of the affected airplanes. A 90-day comment period would be uncommon.

As discussed above in ''Inadequate Procedures in Referenced Service Bulletins,'' the FAA also finds that it is possible to accomplish the requirements of this AD. Since the issuance of the NPRM's, the airplane manufacturer, in conjunction with operators, has completed the prototype installations. Based on the results of these installations, the airplane manufacturer is developing revisions to the service bulletins referenced in the AD's to include detailed instructions for accomplishment of the required replacement. These revised service bulletins are scheduled for completion in June 2000. Any new or revised service bulletins, among other items, will contain procedures to maintain/test the integrity of the wiring after accomplishment of the replacement of any MPET insulation blanket. These revised service bulletins will be approved as an AMOC for the requirements of this AD.

The FAA does not concur with the commenter's request to delay issuance of the final rules. These revised service bulletins are scheduled for completion in June 2000. The FAA has determined that, while physically challenging, the actions required by the AD can be accomplished within the 5-year compliance time, and that the actions are warranted to address an identified unsafe condition.

In support of its request to withdraw the NPRM's, one commenter contends that other rulemaking in development by the FAA may eventually affect the airplanes covered by this AD, thereby requiring two extensive modifications.

The FAA does not concur with the commenter's request to withdraw the NPRM's and combine them with the draft burnthrough NPRM. Any other regulatory action to raise the level of safety would have to be justified and subject to public comment. The FAA does not anticipate requiring airplanes to be modified twice as a result of future actions. The actions required by this AD are intended to correct an identified unsafe condition by removing MPET insulation blankets from airplanes affected by these AD's. These actions are not intended to provide a general upgrade to the current level of safety specified in the airworthiness regulations. Therefore, the actions required by these AD's are warranted.

One commenter disagrees that prototyping efforts are necessary to determine the feasibility of the requirements of the proposed AD's and disagrees that issuance of the proposed AD's should be delayed. The commenter states that it is in the process of prototyping the insulation retrofit on several affected airplanes. The commenter expects the prototyping to be completed in 6 weeks (the commenter's letter was received by the FAA on September 27, 1999). The FAA concurs with the commenter that issuance of the final rules should not be delayed. As discussed previously, the FAA has participated in the prototyping specified by the commenter, and that prototyping effort has been completed.

Cost Estimates

Several commenters state that the FAA ''grossly'' underestimated the costs associated with accomplishing the requirements of the proposed AD and provided their cost estimates. Two other commenters provided cost estimates that were less than those provided in the NPRM's.

The FAA concurs that the cost estimates specified in the NPRM's were underestimated. The FAA based its cost estimates on information that was available at the time the NPRM's were issued. Since the issuance of the NPRM's, the FAA has carefully reviewed the information and cost estimates provided by the commenters and the information obtained during the prototype exercises. The FAA has learned that most Model DC–9–80 and MD–90–30 series airplanes do not have MPET insulation blankets installed in the nose section of the airplane. Also, a number of airplanes do not have MPET insulation blankets in the fuselage, but have MPET insulation blankets only on the air conditioning ducting. The airplane manufacturer will be making this information available when the service bulletins are revised, as mentioned above. In light of these findings, the FAA has revised the cost estimates for the final rules, which is summarized below under the heading ''Regulatory Evaluation Summary.''

Several commenters request that the FAA reevaluate the cost estimates once the prototype exercises are completed. As discussed previously, the FAA has revised the cost estimate of the final rules based on the prototype exercises.

Several commenters state that the FAA should consider costs associated with accomplishing the requirements of both proposed AD's (*i.e.,* Rules Dockets 99–NM–161–AD and 99–NM–162–AD), under Title II of the Unfunded Mandates Reform Act of 1995.

The FAA did consider the total costs associated with accomplishing the requirements of both NPRM's for all affected airplanes under the heading ''Regulatory Evaluation Summary'' in the preamble of the NPRM's. A copy of the Preliminary Cost Analysis and Initial Regulatory Flexibility Analysis also were included in each docket. These documents, along with the final documents, are available for the public to review.

Conclusion

After careful review of the available data, including the comments noted above, the FAA has determined that air safety and the public interest require the adoption of the rule with the changes previously described. The FAA has determined that these changes will neither increase the economic burden on any operator nor increase the scope of the AD.

Regulatory Evaluation Summary

To determine the regulatory impact of this AD, the FAA prepared a Final Cost Analysis and a Final Regulatory Flexibility Analysis. In addition, the FAA assessed the impact of the AD on international trade and whether it must satisfy the requirements of the Unfunded Mandates Reform Act. While a summary of these findings is reported in this preamble, a more detailed discussion is included in the Rules Docket for this AD.

Since the publication of the NPRM, the FAA has observed several prototype exercises that involved the removal and replacement of MPET insulation blankets. The information obtained from these exercises assisted the FAA, operators, and manufacturer in understanding the technical details and impact of the requirements of this AD.

The FAA took account of the results of these exercises, comments to the NPRM's, and other additional information, then consequently adjusted its estimates of the costs attributable to this AD. In addition, between 50 and 60 Model DC–10 series airplanes included in the proposed analysis are not in fact operated as civil aircraft and were thus excluded from this final analysis (only economic impacts on the private sector are considered in rulemaking evaluations). Specifics of all these adjustments are discussed below.

Several commenters indicate that the FAA underestimated the costs of the new insulation material, labor hours necessary for retrofitting, and lost passenger revenue from retrofitting downtime. With respect to labor and material costs, the FAA contacted the major operators affected by the AD (those with the preponderate portion of airplanes requiring modification), as well as the major material suppliers (one of which was an airplane manufacturer), and consequently, increased the estimated compliance costs. Therefore, the labor cost calculation methods used in this AD differ from those used in the NPRM's. The FAA has developed the labor estimates for this AD using information supplied by the manufacturer and affected operators to arrive at average values specific to the requirements of this AD. The FAA considers these values conservative.

The commenters express disagreement with the FAA's asset-based approach to estimating the cost of the loss of service of the airplanes during their retrofits. These commenters suggest that the estimate be made on the basis of loss of per seat revenue. There are two reasons why the FAA does not use the loss of per seat revenue approach. First, the FAA takes an industry-wide perspective in which a passenger who cannot be seated on an airplane that is out of service for compliance with this AD can be seated on an airplane that is in service. On an industry-wide basis, no revenue will be lost. Second, the contribution of a seat's revenue to corporate net income is subject to variations in accounting, financial, marketing, and operational practice.

The FAA's asset-based approach centers on the operators' reported financial ratio and overall corporate rate of return, which is published by the Department of Transportation. This ratio is applied to the average value of the assets lost to the service of the operators

and is adjusted for the average period of time for which they are lost because of compliance. This approach assumes that operators maximize the value of their firms by optimizing the mix and quantity of their assets.

Even though the FAA uses essentially the same ''lost-revenue'' method as that in the supplemental NPRM's, the FAA nevertheless did increase its estimates of lost revenue by increasing the number of days out of service, reducing the operating base year from 365 days to approximately 320 days, and raising the rate of return (9% is an average of domestic passenger and cargo operators' profit rates as estimated by the Department of Transportation's Bureau of Transportation Statistics). All of these adjustments raise the value of the variables applied to the airplane asset values (*i.e.,* $75.3 million per MD–11 and $31.5 million per DC–10).

The foregoing results in the following adjustments to the calculations presented in the supplemental NPRM.

For Model MD–11 series airplanes, the FAA increased the estimate of material costs from approximately $54,300 to $217,460 per airplane, installation costs from approximately $674,700 to $723,600 per airplane, and net lost revenues from approximately $158,750 to $401,340, summing to $1,342,400 per airplane. (Note: The affected Model MD–11 series airplanes have been split up into two groups: Group 1, which require insulation replacement and modification of air conditioning ducts (57 airplanes); and Group 2, which require only modification of air conditioning ducts (4 airplanes); costs per airplane equal approximately $1,417,360 for Group 1 and $274,310 for Group 2). The total costs over the 5-year retrofit period (2001–2005) for all 61 affected MD–11 airplanes is approximately $81.9 million, or $66.9 million discounted to present value (previous estimate was $45.8 million discounted).

For Model DC–10 series airplanes , the FAA increased the estimate of material costs from $46,139 to $203,700 per airplane, the installation costs from $573,689 to $636,700 per airplane, and net lost revenues from $54,370 to $150,610, summing to $991,010 per airplane. The total costs over the 5-year retrofit period (2001–2005) for all 16 affected DC–10 airplanes is approximately $15.9 million, or $12.9 million discounted to present value (previous estimate was $41.6 million discounted). [Note: The significant decrease in total costs for the group of Model DC–10 series airplanes is the result of excluding 57 airplanes that are owned by the U.S. Department of Defense.]

The adjusted estimate of the total costs of this AD over the 5-year retrofit period for all 77 affected wide-body airplanes is approximately $97.7 million ($1,269,390 per airplane) or $79.8 million discounted to present value. The total impact for all affected airplanes (*i.e.,* DC–9–80, MD–90–30, MD–11, and DC–10) is $449.3 million or $368.4 million discounted to present value over the five year compliance time.

With respect to effects on small entities, the Regulatory Flexibility Act (RFA) of 1980 establishes ''as a principle of regulatory issuance'' that agencies shall endeavor, consistent with the objective of the rule and of applicable statutes, to fit regulatory and informational requirements to the sale of the business, organizations, and governmental jurisdictions subject to regulation. To achieve that principle, the RFA requires agencies to solicit and consider flexible regulatory proposals and to explain the rationale for their actions. The RFA covers a wide range of small entities, including small businesses, not-for-profit organizations, and small governmental jurisdictions. Agencies must perform a review to determine whether a proposed or final rule will have a significant economic impact on a substantial number of small entities. If the determination is that it will, the Agency must prepare a regulatory flexibility analysis as described in the RFA. However, if an agency determines that a proposed or final rule is not expected to have a significant economic impact on a substantial number of small entities, section 605(b) of the RFA provides that the head of the agency may so certify and a regulatory flexibility analysis is not required. The certification must include a statement providing the factual basis for this determination, and the reasoning should be clear.

Two entities affected by the AD are considered small, *i.e.,* have less than 1,500 employees (one of these entities has revenues in excess of $100 million); however, the FAA does not consider two entities to be a substantial number. Pursuant to the RFA, 5 U.S.C. 605(b), the FAA certifies that this AD will not have a significant economic impact on a substantial number of small entities.

The provisions of this AD will have little or no impact on trade for U.S. firms doing business in foreign countries and foreign firms doing business in the United States.

Finally, Title II of the Unfunded Mandates Reform Act of 1995 (the Act), enacted as Public Law 104–4 on March 22, 1995, requires each Federal agency, to the extent permitted by law, to prepare a written assessment of the effects of any Federal mandate in a proposed or final agency rule that may result in the expenditure by State, local, and tribal governments, in the aggregate, or by the private sector, of $100 million or more (adjusted annually for inflation) in any one year. Section 204(a) of the Act, 2 U.S.C. 1534, requires the Federal agency to develop an effective process to permit timely input by elected officers (or their designees) of State, local, and tribal governments on a proposed ''significant intergovernmental mandate.'' A ''significant intergovernmental mandate'' under the Act is any provision in a Federal agency regulation that would impose an enforceable duty upon State, local, and tribal governments, in the aggregate, of $100 million (adjusted annually for inflation) in any one year. Section 203 of the Act, 2 U.S.C. 1533, provides that before establishing any regulatory requirements that might significantly or uniquely affect small governments, the agency shall have developed a plan that, among other things, provides for notice to potentially affected small governments, if any, and for a meaningful and timely opportunity to provide input in the development of regulatory proposals.

This AD does not contain any Federal intergovernmental or private sector mandate. Therefore, the requirements of Title II of the Unfunded Mandates Reform Act of 1995 do not apply.

List of Subjects in 14 CFR Part 39

Air transportation, Aircraft, Aviation safety, Incorporation by reference, Safety.

Adoption of the Amendment

Accordingly, pursuant to the authority delegated to me by the Administrator, the Federal Aviation Administration amends part 39 of the Federal Aviation Regulations (14 CFR part 39) as follows:

PART 39—AIRWORTHINESS DIRECTIVES

1. The authority citation for part 39 continues to read as follows:

Authority: 49 U.S.C. 106(g), 40113, 44701.

§ 39.13 [Amended]

2. Section 39.13 is amended by adding the following new airworthiness directive:

2000–11–02 McDonnell Douglas: Amendment 39–11750. Docket 99–NM–162-AD.

Applicability: Model DC–10–10F, DC–10–15, DC–10–30, DC–10–30F, and DC–10–40 series airplanes, and Model MD–11 and –11F series airplanes; manufacturer's fuselage numbers 359 through 632 inclusive; certificated in any category.

Note 1: This AD applies to each airplane identified in the preceding applicability provision, regardless of whether it has been modified, altered, or repaired in the area subject to the requirements of this AD. For airplanes that have been modified, altered, or repaired so that the performance of the requirements of this AD is affected, the owner/operator must request approval for an alternative method of compliance in accordance with paragraph (e) of this AD. The request should include an assessment of the effect of the modification, alteration, or repair on the unsafe condition addressed by this AD; and, if the unsafe condition has not been eliminated, the request should include specific proposed actions to address it.

Compliance: Required as indicated, unless accomplished previously.

To ensure that insulation blankets constructed of metallized polyethyleneteraphthalate (MPET) are removed from the fuselage, accomplish the following:

Inspection

(a) Within 5 years after the effective date of this AD, determine whether, and at what locations, insulation blankets constructed of MPET, are installed. When markings are not visible, the determination shall be made by using known MPET material as a comparison sample to assist in the identification.

Note 2: Insulation blankets that are marked with ''DMS 2072, Type 2, Class 1, Grade A;'' ''DMS 2072, Type 2, Class 1;'' or ''DMS 1996, Type 1;'' are constructed of MPET.

Corrective Actions

(b) For insulation blankets that are determined not to be constructed of MPET, no further action is required by this AD.

(c) For insulation blankets that are determined to be constructed of MPET, within 5 years after the effective date of this AD, replace the MPET insulation blankets with new insulation blankets that have been approved by the Manager, Los Angeles Aircraft Certification Office (ACO), FAA, Transport Airplane Directorate. The blankets shall be replaced in accordance with the Accomplishment Instructions of McDonnell Douglas Service Bulletin DC10–25–368, dated October 31, 1997 (for Model DC–10–10F, DC–10–15, DC–10–30, DC–10–30F, and DC–10–40 series airplanes); or McDonnell Douglas Service Bulletin MD11–25–200, Revision 01, dated March 20, 1998 (for Model MD–11 and –11F series airplanes); as applicable. The replacement insulation blankets must be constructed of materials tested in accordance with Appendix 1 of this AD, or in accordance with a method approved by the Manager, Los Angeles ACO.

Note 3: Although this paragraph allows up to 5 years for the required replacement, the FAA anticipates that operators will comply at the earliest practicable maintenance opportunity.

Note 4: Only one of the two metallized Tedlar™ covers specified in the service bulletins has been shown to have successfully passed the testing of the American Society for Testing and Materials (ASTM) flammability standard and is considered acceptable for compliance with the requirements of paragraph (c) of this AD.

Spares

(d) As of the effective date of this AD, no person shall install an MPET insulation blanket on any airplane.

Alternative Methods of Compliance

(e) An alternative method of compliance or adjustment of the compliance time that provides an acceptable level of safety may be used if approved by the Manager, Los Angeles ACO. Operators shall submit their requests through an appropriate FAA PMI, who may add comments and then send it to the Manager, Los Angeles ACO.

Note 5: Information concerning the existence of approved alternative methods of compliance with this AD, if any, may be obtained from the Los Angeles ACO.

Special Flight Permits

(f) Special flight permits may be issued in accordance with sections 21.197 and 21.199 of the Federal Aviation Regulations (14 CFR 21.197 and 21.199) to operate the airplane to a location where the requirements of this AD can be accomplished.

Incorporation by Reference

(g) The blankets shall be replaced in accordance with the Accomplishment Instructions of McDonnell Douglas Service Bulletin DC10–25–368, dated October 31, 1997 (for Model DC–10–10F, DC–10–15, DC–10–30, DC–10–30F, and DC–10–40 series airplanes); or McDonnell Douglas Service Bulletin MD11–25–200, Revision 01, dated March 20, 1998 (for Model MD–11 and –11F series airplanes); as applicable. This incorporation by reference was approved by the Director of the Federal Register in accordance with 5 U.S.C. 552(a) and 1 CFR part 51. Copies may be obtained from Boeing Commercial Aircraft Group, Long Beach Division, 3855 Lakewood Boulevard, Long Beach, California 90846, Attention: Technical Publications Business Administration, Dept. C1–L51 (2–60). Copies may be inspected at the FAA, Transport Airplane Directorate, 1601 Lind Avenue, SW., Renton, Washington; or at the FAA, Transport Airplane Directorate, Los Angeles Aircraft Certification Office, 3960 Paramount Boulevard, Lakewood, California; or at the Office of the Federal Register, 800 North Capitol Street, NW., suite 700, Washington, DC.

(h) This amendment becomes effective on June 30, 2000.

Appendix 1.—Test for Materials Replacing Metallized PET Thermal Acoustical Insulation Film, February 16, 2000

This test method is used to evaluate the flammability and flame propagation characteristics of thermal/acoustic insulation when exposed to both a radiant heat source and a flame.

(a) *Definitions.*

(1) *Thermal/Acoustic Insulation.* Thermal/acoustic insulation is defined as a material or system of materials used to provide thermal and/or acoustic protection. Examples include a film-covering material encapsulating a core material such as fiberglass or other batting material and foams.

(2) *Radiant Heat Source.* The radiant heat source is an air/gas fueled radiant heat energy panel.

(b) *Test Apparatus* (as schematically shown in figure 1).

(1) *Radiant Panel Test Chamber.* Tests will be conducted in the radiant panel test chamber as used in ASTM-Designation: E 648. It is suggested that the test chamber be located under an exhaust hood to facilitate clearing the chamber of smoke after each test. The radiant panel test chamber shall consist of an enclosure 55 inches (1400 mm) long by 19½ inches (500 mm) deep by 28 inches (710 mm) above the test specimen. The sides, ends, and top shall be insulated with a fibrous ceramic insulation such as Kaowool™. One side shall be provided with an approximately 48 by 6 inch (1219 by 152mm) draft tight, high temperature, heat resistant glass observation window, to facilitate viewing the sample during testing. On the same side and below the window is a door which, when open, allows the specimen platform to be moved out for mounting or removal of test specimens. The bottom of the test chamber shall consist of a sliding steel platform, which has provisions for securing the test specimen holder in a fixed and level position. The top of the chamber shall have an exhaust stack with interior dimensions of 4 inches (102mm) wide by 15 inches (380 mm) deep by 12.5 inches (318mm) high at the opposite end of the chamber from the radiant energy source.

(2) *Radiant Heat Source.* The radiant heat energy source will be a panel of porous refractory material mounted in a cast iron frame, with a radiation surface of 12 by 18 inches (305 by 457mm). It shall be capable of operating at temperatures up to 1500° F (816° C) (Figure 1).

Figure 1.

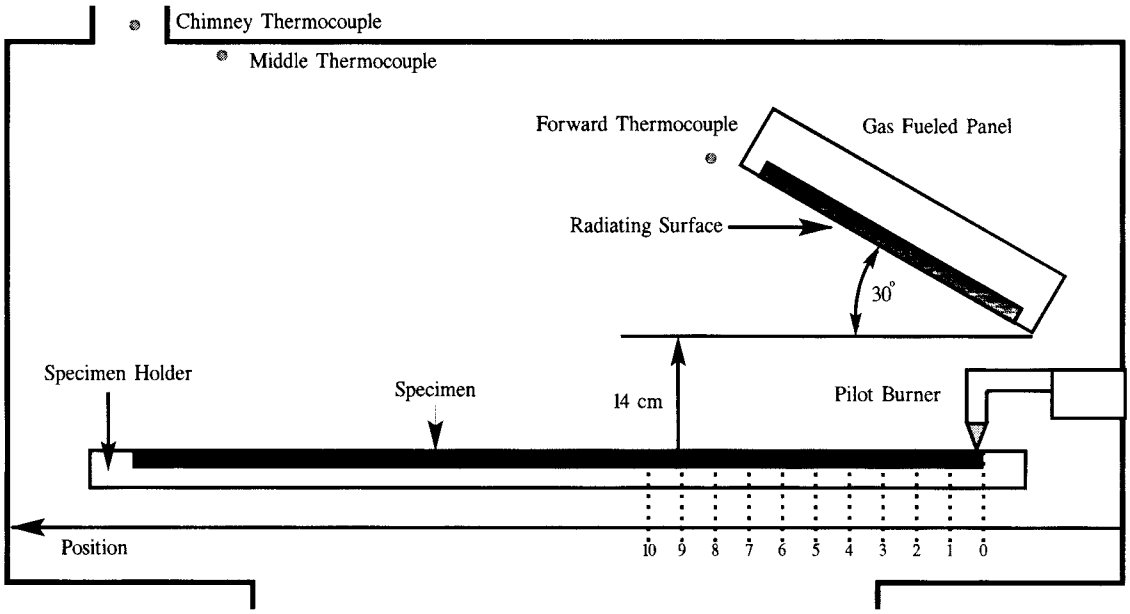

(i) Radiant Panel Fuel System. The radiant panel fuel will be propane (liquid petroleum gas—2.1 UN 1075). The panel fuel system shall consist of a venturi-type aspirator for mixing gas and air at approximately atmospheric pressure. Suitable instrumentation will be necessary for monitoring and controlling the flow of fuel and air to the panel. Instrumentation will include an air flow gauge, an air flow regulator, a gas pressure gauge, and a rotameter for measuring gas flow.

(ii) Radiant Panel Placement. The panel will be mounted in the chamber at 30 degrees to the horizontal specimen plane.

(3) *Specimen Holding System.*

(i) The sliding platform serves as the housing for test specimen placement. A ¼ inch (6.35mm) sheet of Durarocka, or other non-combustible base, measuring 43¼ inches by 12½ inches (1098 by 317.5mm) will be placed in the open bottom (base) of the sliding platform. It is necessary to cut the non-combustible base into two pieces for placement in the bottom of the platform, since it will be supported by a ¾-inch (19.1mm) lip that extends around the bottom of the platform base. It is suggested that the shortest piece be placed at the end furthest from the radiant panel (figure 2). A ½ inch (13mm) piece of Kaowoolλ™ board or other high temperature material measuring 41½ by 8¼ inches (1054 by 210mm) will be attached to the back side of the platform. This board will serve as a heat retainer and will protect the test specimen from excessive preheating. The height of this board must not be too high such that it will impede the sliding platform movement (in and out) of the test chamber.

Figure 2: Sliding Platform

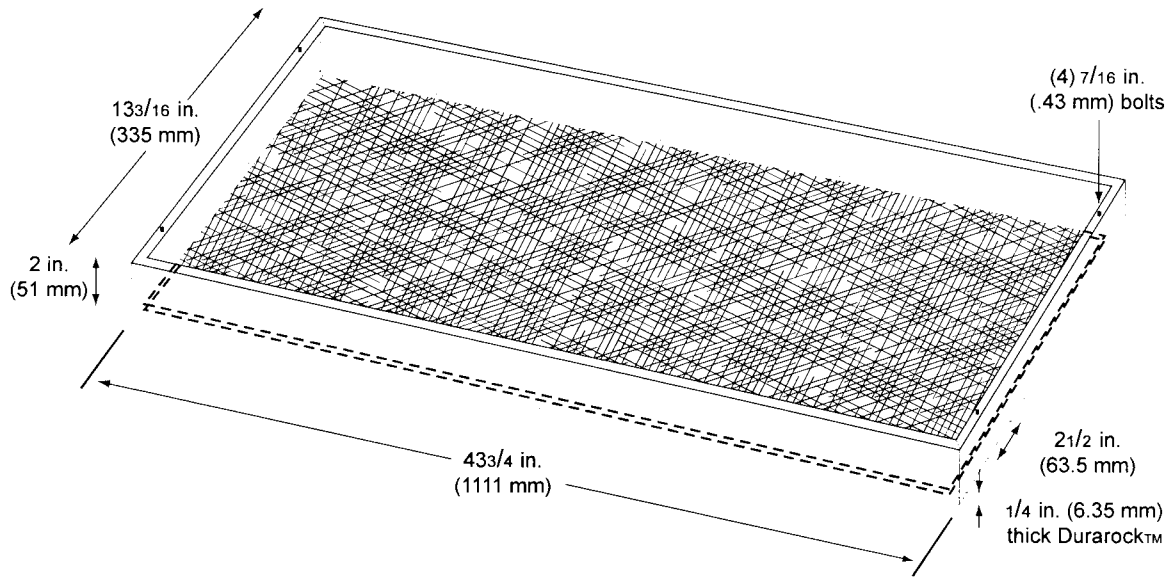

(ii) The test specimen will be placed horizontally on the non-combustible base. A stainless steel retaining frame (AISI Type 300 UNA–NO8330), or equivalent, having a thickness of 0.078 inches (1.98mm) and overall dimensions of 44¾ by 12¾ inches (1137 by 320mm) with a specimen opening of 40 by 7⅞ (1016 by 140mm) will be placed on top of the test specimen. The retaining frame will have two ½ inch (12.7mm) holes drilled at each end for positioning the frame to the two stud bolts at each end of the sliding platform (figure 3).

Figure 3: Stainless Steel Retaining Frame

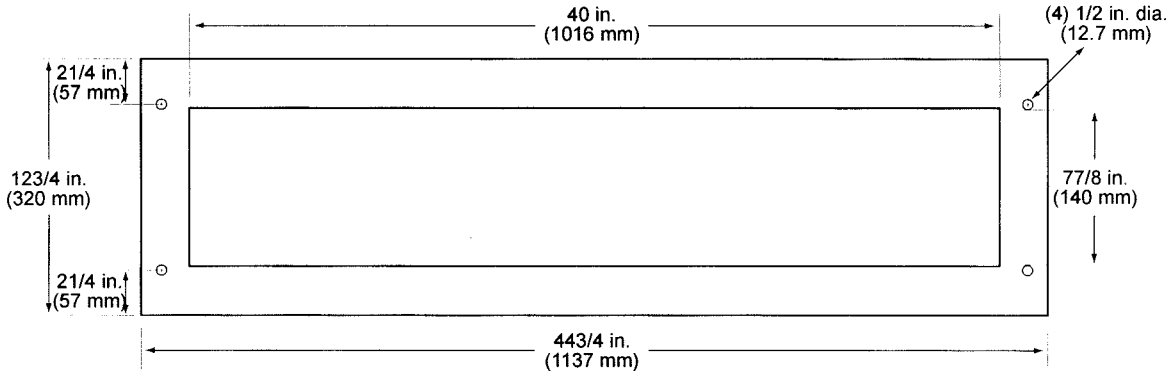

(iii) A securing frame (acting as a clamping mechanism) constructed of mild steel will be placed over the test specimen. The securing frame overall dimensions are 42½ by 10½ inches (1080 by 267mm) with a specimen opening of 39½ by 7½ inches (1003 by 190mm). Hence, the exposed area of test specimen exposed to the radiant panel is 39¼ by 7¼ inches (996 by 184mm). See figure 4. It is not necessary to physically fasten the securing frame over the test specimen due to the weight of the frame itself.

(4) *Pilot Burner.* The pilot burner used to ignite the specimen is a commercial propane venturi torch with an axially symmetric burner tip having a propane supply tube with an orifice diameter of 0.003 inches (0.076mm). The propane flow is adjusted to produce a pencil flame blue inner cone length of ½ inch (13mm). There will be a means provided to move the burner out of the ignition position so that the flame is horizontal and at least 2 inches (50mm) above the specimen plane.

(5) *Thermocouples.* Three 24 American Wire Gauge (AWG) Type K (Chromel-Alumel) thermocouples will be installed in the test chamber for temperature monitoring. All three are inserted into the chamber through three small holes drilled through the top of the chamber. One thermocouple is placed 2 inches (51mm) from the end of the radiant panel and approximately 16 inches (406mm) above the test specimen. The second thermocouple is placed 5 inches (127mm) from the first thermocouple and approximately 16 inches (406mm) from the sample. The third thermocouple is located in the chimney approximately 38 inches (965mm) above the specimen.

(6) *Calorimeter.* The calorimeter will be a one inch cylindrical water-cooled, total heat flux density, foil type Gardon Gage that has

a range of 0 to 5 BTU/ft²second (0 to 5.6 Watts/cm²).

(7) *Calorimeter Calibration Specification and Procedure.*

(i) Calorimeter Specification.

(A) Foil diameter will be 0.25 ±0.005 inches (6.35±0.13mm).

(B) Foil thickness will be 0.0005 ±0.0001 inches (0.013±0.0025mm).

(C) Foil material will be thermocouple grade Constantan.

(D) Temperature measurement will be a Copper Constantan thermocouple.

(E) The copper center wire diameter will be 0.0005 inches (0.013mm).

(F) The entire face of the calorimeter will be lightly coated with ''Black Velvet'' paint having an emissivity of 96 or greater.

(ii) Calorimeter Calibration.

(A) The calibration method will be by comparison to a like standardized transducer.

(B) The standardized transducer will meet the specification given in paragraph (6).

(C) It will be calibrated against a primary standard by the National Institute of Standards and Technology (NIST).

(D) The method of transfer will be a heated graphite plate.

(E) The graphite plate will be electrically heated, have a clear surface area on each side of the plate of at least 2 by 2 inches (51 by 51mm), and be ⅛ inch ±1/16 inch thick (3.2 ±1.6mm).

(F) The 2 transducers will be centered on opposite sides of the plates at equal distances from the plate.

(G) The distance of the calorimeter to the plate will be no less than 0.0625 inches (1.6mm), nor greater than 0.375 inches (9.5mm).

(H) The range used in calibration will be at least 0–3.5 BTUs/ft² second (0–3.9Watts/cm²) and no greater than 0–5.6 BTUs/ft² second (0–5 Watts/cm²).

(I) The recording device used must record the 2 transducers simultaneously or at least within 1/10 second of each other.

(8) *Calorimeter Fixture.* With the sliding platform pulled out of the chamber, install a 2-rail fixture that has a travel range of 40¼ inches (1022mm) over the sliding platform. The dimension between the 2 rails is 2 11/16 inches (68mm). The rail fixture is screwed into the sliding panel, such that it is always directly under the geometric center of the radiant panel (figure 4). Push the platform into the chamber and insert the calorimeter. The calorimeter, which is mounted in an insulated housing, fits in the rail opening but has enough clearance such that it may be moved along the rail for heat flux readings. The top surface of the calorimeter must be level with the rails.

Figure 4: Angle Iron (1.5x1.5) Securing Frame
*NOTE: All Seams Welded

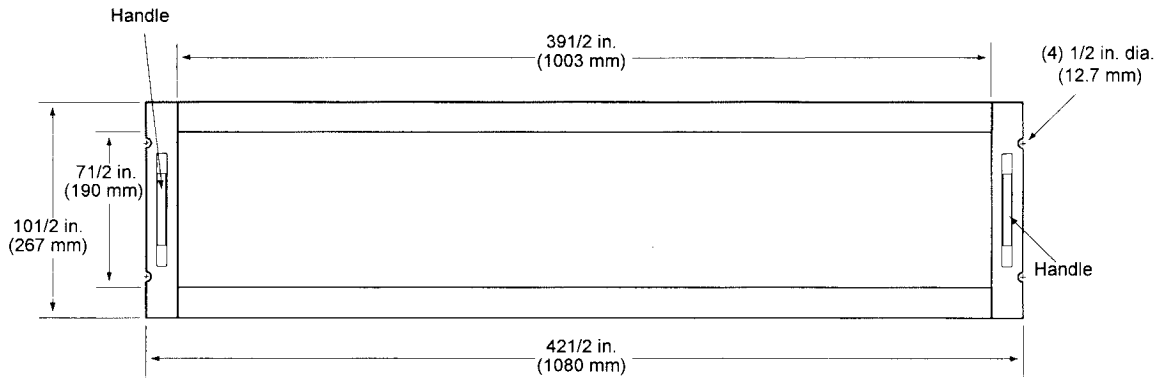

(9) *Instrumentation.* A calibrated recording device with an appropriate range or a computerized data acquisition system will be provided to measure and record the outputs of the calorimeter and the thermocouples. The data acquisition system must be capable of recording the calorimeter output every second.

(10) *Timing Device.* A stopwatch or other device, accurate to ±1 second/hour, will be provided to measure the time of application of the pilot burner flame.

(c) *Test Specimens.*

(1) Specimen Preparation. A minimum of three test specimens will be prepared and tested.

(2) Construction. Cut a piece of core material such as foam or fiberglass. If fiberglass is used, cut the material 43½ (±¼) inches long (1093mm) (±6.3mm) by 12½ inches (305.1mm) wide. If using foam, cut the material 41¼ inches (1039mm) by 11 inches wide (279mm) by 1½ inches (381mm) high. Cut a piece of film cover material (if used) large enough to cover the core material. It is permissible to staple the film cover at the ends, as they are not exposed to the radiant heat source. A piece or pieces of an inorganic/inert material such as Kaowoolλ™ or Marinitε™ board may be placed in the bottom of the sliding platform holder if the sample is not thick enough to be level with the top of the sliding platform. The specimen thickness must be of the same thickness as installed in the airplane.

(d) *Specimen Conditioning.* The specimens will be conditioned at 70 ±5°F (21 ±2°C) and 55%±10% relative humidity for a minimum of 24 hours prior to testing.

(e) *Calibration.*

(1) With the sliding platform out of the chamber, install the rail fixture. Push the platform back into the chamber, install the calorimeter (in its housing), and move the calorimeter to the ''zero'' position (figure 5). Close the bottom door located below the sliding platform. The centerline of the calorimeter is 1⅞ inches (46mm) from the end of the sliding platform. This will be the ''zero'' position. The distance from the center of the calorimeter to the radiant panel surface at this point is 7.5 inches ±⅛ (191 mm ±3).

(i) Prior to igniting the radiant panel, ensure that the calorimeter face is clean and that there is water running through the calorimeter.

(2) Ignite the panel. Adjust the fuel/air mixture to achieve 1.5 BTUs/ft² −second ±0.025 BTUs/ft² −second (1.9 Watts/cm² ±0.025 Watts/cm²) at the ''zero'' position. Allow the unit to reach steady state (this may take up to 1 hour). The pilot burner is off during this time. The temperature as measured by the thermocouple closest to the panel (forward) is approximately 1100°F (600°C). The temperatures recorded by thermocouples 2 and 3 (thermocouple 3 located in chimney) are approximately 430°F (230°C) and 300°F (135°C), respectively.

Figure 5: Calorimeter Rail

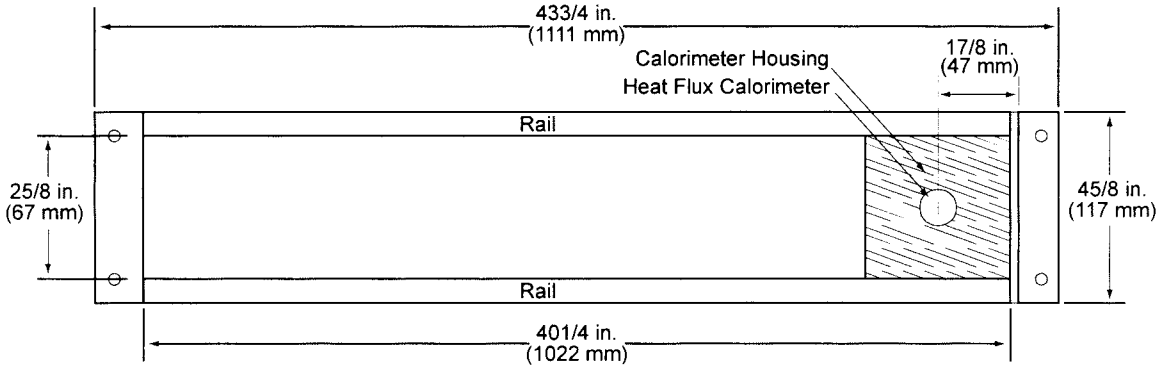

(3) After steady-state conditions have been reached, move the calorimeter 2 inches (51 mm) from the ''zero'' position and record the heat flux. Allow a minimum of 30 seconds at each position for the calorimeter to stabilize. Record at least 10 positions. (Figure 6 depicts a calibration profile.)

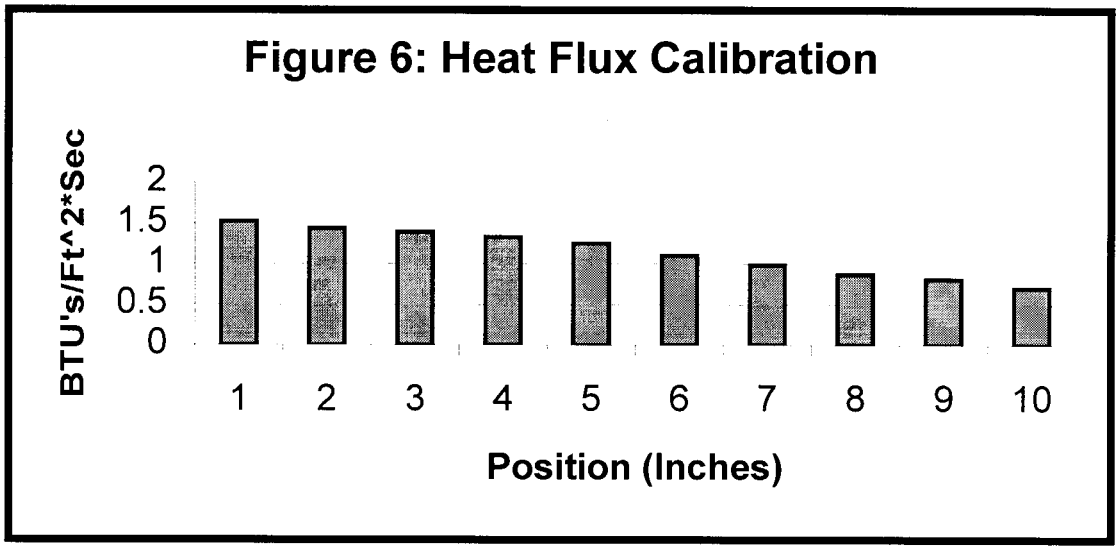

(4) It is not necessary to run a full heat flux calibration (minimum of 10 positions) each time the chamber is powered on. It is required that a heat flux measurement be taken at the ''zero'' position at the start of the test period (*e.g.,* each morning) to ensure that the 1.5 BTU/ft^2 -second (1.9 Watts/cm^2) requirement be met. A full calibration should be run periodically.

(5) Open the bottom door, pull out the sliding platform, and remove the calorimeter and rail fixture.

(f) *Test Procedure.*

(1) Ignite the pilot burner. Ensure that it is at least 2 inches (51mm) above the top of the platform. The burner must not contact the specimen until the test begins.

(2) Place the test specimen in the sliding platform holder. Ensure that the test sample surface is level with the top of the platform. At ''zero'' point, the specimen surface is 7½ inches +/-⅛ (191mm +/-3) below the radiant panel.

(3) With film/fiberglass assemblies, it may be necessary to puncture small holes in the film cover to purge any air inside. This allows the operator to maintain the proper test specimen position (level with the top of the platform). The holes should be made in the sides and/or the corners of the test specimen using a needle-like tool.

(4) Place the retaining frame and the securing frame over the test specimen.

(5) A small mark should be placed on the ''zero'' point.

(6) Immediately push the sliding platform into the chamber and close the bottom door.

(7) Bring the pilot burner flame into contact with the center of the specimen such that the center line of the flame impinges on the ''zero'' point and simultaneously start the timer. The burner flame impinges the sample at an angle of approximately 20 degrees with the horizontal (front of the sliding platform).

(8) Leave the burner in position for 15 seconds and then remove to a position at least 2 inches (51mm) above the specimen.

(g) *Report.*

(1) Identify and describe the specimen being tested.

(2) Report any shrinkage or melting of the test specimen.

(3) Report the Burn length

(4) Report Extinguishing Time

(h) *Requirements.*

(1) During burner application, no flaming is allowed to propagate more than 2 inches (50.8mm) along the sample (to the left in figure 1) of the centerline of the flame.

(2) There shall be no flaming of the test sample after pilot burner removal.

Issued in Renton, Washington, on May 19, 2000.

John J. Hickey,

Manager, Transport Airplane Directorate, Aircraft Certification Service.

[FR Doc. 00–13150 Filed 5–25–00; 8:45 am]

BILLING CODE 4910–13–P

Federal Register

Friday,
May 26, 2000

Part VI

Department of Justice

Bureau of Prisons

28 CFR Parts 522 and 543

Civil Contempt of Court Commitments; Federal Tort Claims Act; Final Rule

DEPARTMENT OF JUSTICE

Bureau of Prisons

28 CFR Part 522

[BOP–1092–F]

RIN 1120–AA87

Civil Contempt of Court Commitments

AGENCY: Bureau of Prisons, Justice.

ACTION: Final rule.

SUMMARY: In this document, the Bureau of Prisons is amending its regulations on civil contempt of court commitments to note the statutory distinction between the order of service of a sentence for offenses committed before November 1, 1987, and those committed on or after November 1, 1987. This amendment merely describes the various dispositions of the court under the appropriate statutes and is intended to be informational in nature.

EFFECTIVE DATE: June 26, 2000.

ADDRESSES: Rules Unit, Office of General Counsel, Bureau of Prisons, HOLC Room 754, 320 First Street, NW., Washington, DC 20534.

FOR FURTHER INFORMATION CONTACT: Roy Nanovic, Office of General Counsel, Bureau of Prisons, phone (202) 514–6655.

SUPPLEMENTARY INFORMATION: The Bureau of Prisons is amending its regulations on Civil Contempt of Court Commitments (28 CFR part 522, subpart B). A final rule on this subject was published in the **Federal Register** on June 29, 1979 (44 FR 38244), and was amended April 6, 1994 (59 FR 16406).

Current provisions on civil contempt of court commitments in § 522.11 describe a court's discretion pertaining to offenses committed before November 1, 1987. Section 522.11 (d) and (e) are being revised to reflect a court's discretion pertaining to offenses committed on or after November 1, 1987. More specifically, federal criminal sentences of imprisonment might not commence immediately upon being imposed for several reasons. For example, the defendant may be granted bail pending appeal, or the sentencing court may order the defendant to self-surrender at a later scheduled date. Consequently, § 522.11(d) is revised to apply in those situations where a person receives a federal sentence of imprisonment and, prior to commencing service of the sentence, is the subject of a civil contempt commitment order. In such circumstances, the rule indicates credit toward service of the criminal sentence is delayed or suspended for the duration of the contempt commitment, unless the committing judge orders otherwise. The rule still applies to those defendants serving criminal sentences of imprisonment who subsequently become the subject of a civil contempt commitment order.

Pursuant to federal caselaw decisions, multiple federal sentences of imprisonment imposed pursuant to 18 U.S.C. Chapter 227, as applicable to offenses committed before November 1, 1987, are presumed to run concurrently unless ordered to run consecutively by the sentencing judge. To the contrary, as applied to offenses committed on or after November 1, 1987, 18 U.S.C. 3584 requires that multiple federal sentences of imprisonment imposed at different times run consecutively unless ordered to run concurrently by the sentencing judge or statutory directive. Revised § 522.11 (e)(1) and (2) reflect these differences in cases where a civil contempt commitment order is in effect and a criminal sentence of imprisonment is subsequently imposed. In the case of a criminal sentence of imprisonment imposed pursuant to 18 U.S.C. Chapter 227, as applicable to offenses committed before November 1, 1987, the criminal sentence runs concurrently with the commitment order unless the sentencing judge orders otherwise. In the case of a criminal sentence of imprisonment imposed pursuant to 18 U.S.C. Chapter 227, as applicable to offenses committed on or after November 1, 1987, the criminal sentence runs consecutively to the commitment order unless the sentencing judge orders otherwise.

Because this amendment merely describes the various dispositions of the court under the appropriate statute, the Bureau finds good cause for exempting the provisions of the Administrative Procedure Act (5 U.S.C. 553) requiring notice of proposed rulemaking, the opportunity for public comment, and delay in effective date. Members of the public may submit comments concerning this rule by writing to the previously cited address. These comments will be considered but will receive no response in the **Federal Register**.

Executive Order 12866

This rule falls within a category of actions that the Office of Management and Budget (OMB) has determined not to constitute ''significant regulatory actions'' under section 3(f) of Executive Order 12866 and, accordingly, it was not reviewed by OMB.

Executive Order 13132

This regulation will not have substantial direct effects on the States, on the relationship between the national government and the States, or on distribution of power and responsibilities among the various levels of government. Therefore, in accordance with Executive Order 13132, it is determined that this rule does not have sufficient federalism implications to warrant the preparation of a Federalism Assessment.

Regulatory Flexibility Act

The Director of the Bureau of Prisons, in accordance with the Regulatory Flexibility Act (5 U.S.C. 605(b)), has reviewed this regulation and by approving it certifies that this regulation will not have a significant economic impact upon a substantial number of small entities for the following reasons: This rule pertains to the correctional management of offenders committed to the custody of the Attorney General or the Director of the Bureau of Prisons, and its economic impact is limited to the Bureau's appropriated funds.

Unfunded Mandates Reform Act of 1995

This rule will not result in the expenditure by State, local and tribal governments, in the aggregate, or by the private sector, of $100,000,000 or more in any one year, and it will not significantly or uniquely affect small governments. Therefore, no actions were deemed necessary under the provisions of the Unfunded Mandates Reform Act of 1995.

Small Business Regulatory Enforcement Fairness Act of 1996

This rule is not a major rule as defined by § 804 of the Small Business Regulatory Enforcement Fairness Act of 1996. This rule will not result in an annual effect on the economy of $100,000,000 or more; a major increase in costs or prices; or significant adverse effects on competition, employment, investment, productivity, innovation, or on the ability of United States-based companies to compete with foreign-based companies in domestic and export markets.

Plain Language Instructions

We try to write clearly. If you can suggest how to improve the clarity of these regulations, call or write Roy Nanovic, Rules Unit, Office of General Counsel, Bureau of Prisons, 320 First St., NW., Washington, DC 20534; telephone (202) 514–6655.

List of Subjects in 28 CFR Part 522

Prisoners.

Kathleen Hawk Sawyer,
Director, Bureau of Prisons.

Accordingly, pursuant to the rulemaking authority vested in the Attorney General in 5 U.S.C. 552(a) and delegated to the Director, Bureau of Prisons in 28 CFR 0.96(p), part 522 in 28 CFR, chapter V, subchapter B, is amended as set forth below.

SUBCHAPTER B—INMATE ADMISSION, CLASSIFICATION, AND TRANSFER

PART 522—ADMISSION TO INSTITUTION

1. The authority citation for 28 CFR part 522 continues to read as follows:

Authority: 5 U.S.C. 301; 18 U.S.C. 3621, 3622, 3624, 4001, 4042, 4081, 4082 (Repealed in part as to offenses committed on or after November 1, 1987), 4161–4166 (Repealed in part as to offenses committed on or after November 1, 1987), 5006–5024 (Repealed October 12, 1984 as to offenses committed after that date), 5039; 28 U.S.C. 509, 510; 28 CFR 0.95–0.99.

2. In § 522.11, paragraphs (d) and (e) are revised to read as follows:

§ 522.11 Procedures.

* * * * *

(d) If a federal criminal sentence of imprisonment (including a Narcotic Addict Rehabilitation Act or Youth Corrections Act commitment) exists when a civil contempt commitment is ordered, credit towards service of the criminal sentence is delayed or suspended for the duration of the contempt commitment unless the committing judge orders otherwise.

(e)(1) If a civil contempt commitment order is in effect when a criminal sentence of imprisonment is imposed under 18 U.S.C. Chapter 227 (as applicable to offenses committed before November 1, 1987), the criminal sentence runs concurrently with the commitment order unless the sentencing judge orders otherwise.

(2) If a civil contempt commitment order is in effect when a criminal sentence of imprisonment is imposed under 18 U.S.C. Chapter 227 (as applicable to offenses committed on or after November 1, 1987), the criminal sentence runs consecutively to the commitment order unless the sentencing judge orders otherwise.

* * * * *

[FR Doc. 00–13301 Filed 5–25–00; 8:45 am]

BILLING CODE 4410–05–P

DEPARTMENT OF JUSTICE

Bureau of Prisons

28 CFR Part 543

[BOP–1098–F]

RIN 1120–AA94

Federal Tort Claims Act

AGENCY: Bureau of Prisons, Justice.

ACTION: Final rule.

SUMMARY: This document adopts as final the proposed rule pertaining to the Federal Tort Claims Act in accordance with the mandate to use plain language. The amendment is intended to provide clearer instructions for filing and processing a claim with the Bureau for money damages for personal injury or death and/or damage to or loss of property.

EFFECTIVE DATE: June 26, 2000.

ADDRESSES: Rules Unit, Office of General Counsel, Bureau of Prisons, HOLC Room 754, 320 First Street, NW., Washington, DC 20534.

FOR FURTHER INFORMATION CONTACT: Roy Nanovic, Office of General Counsel, Bureau of Prisons, phone (202) 514–6655.

SUPPLEMENTARY INFORMATION: The Bureau of Prisons is revising its regulations in 28 CFR 543, subpart C, on the Federal Tort Claims Act. A proposed rule on this subject was published in the **Federal Register** on June 14, 1999 (64 FR 32172). The Bureau received comment from three respondents.

One commenter filed a tort claim alleging that the proposed rule and various other Bureau policies were vague and unclear. No specifics, however, were provided as to the proposed tort claim procedures. This commenter's claim is being processed in accordance with the existing procedures for tort claims. The second commenter stated that the proposed revision was plain and concise. This commenter also expressed the opinion that the current procedures were cumbersome and slow. As noted above, the intent of the revision is to provide clearer instructions for filing and processing a claim with the Bureau for money damages for personal injury or death and/or damage to or loss of property. The Bureau believes that revising the procedures for clarity will also serve to help expedite the process. The third commenter was seeking guidance whether to submit a warranty claim or to file a tort claim for damaged property. The tort claim procedures are available for use. It would be a conflict of interest for the Bureau to advise an inmate on the question of using the tort claim procedures or other available avenues of redress in any specific instance.

With due consideration to the comments received, the Bureau has determined to adopt the proposed rule as final. In adopting the proposed rule as final, the Bureau is amending proposed § 543.32(d) to reflect the role of the Department of Justice's Torts Branch in deciding administrative claims for amounts beyond delegated settlement authority. Members of the public may submit comments concerning this rule by writing to the previously cited address. These comments will be considered but will receive no response in the **Federal Register**.

Executive Order 12866

This rule falls within a category of actions that the Office of Management and Budget (OMB) has determined not to constitute ''significant regulatory actions'' under section 3(f) of Executive Order 12866 and, accordingly, it was not reviewed by OMB.

Executive Order 13132

This regulation will not have substantial direct effects on the States, on the relationship between the national government and the States, or on distribution of power and responsibilities among the various levels of government. Therefore, in accordance with Executive Order 13132, it is determined that this rule does not have sufficient federalism implications to warrant the preparation of a Federalism Assessment.

Regulatory Flexibility Act

The Director of the Bureau of Prisons, in accordance with the Regulatory Flexibility Act (5 U.S.C. 605(b)), has reviewed this regulation and by approving it certifies that this regulation will not have a significant economic impact upon a substantial number of small entities for the following reasons: This rule pertains to the correctional management of offenders committed to the custody of the Attorney General or the Director of the Bureau of Prisons, and its economic impact is limited to the Bureau's appropriated funds.

Unfunded Mandates Reform Act of 1995

This rule will not result in the expenditure by State, local and tribal governments, in the aggregate, or by the private sector, of $100,000,000 or more in any one year, and it will not significantly or uniquely affect small governments. Therefore, no actions were

deemed necessary under the provisions of the Unfunded Mandates Reform Act of 1995.

Small Business Regulatory Enforcement Fairness Act of 1996

This rule is not a major rule as defined by § 804 of the Small Business Regulatory Enforcement Fairness Act of 1996. This rule will not result in an annual effect on the economy of $100,000,000 or more; a major increase in costs or prices; or significant adverse effects on competition, employment, investment, productivity, innovation, or on the ability of United States-based companies to compete with foreign-based companies in domestic and export markets.

Plain Language Instructions

We try to write clearly. If you can suggest how to improve the clarity of these regulations, call or write Roy Nanovic at the address listed above.

List of Subjects in 28 CFR Part 543

Claims, Prisoners.

Kathleen Hawk Sawyer,

Director, Bureau of Prisons.

Accordingly, pursuant to the rulemaking authority vested in the Attorney General in 5 U.S.C. 552(a) and delegated to the Director, Bureau of Prisons in 28 CFR 0.96(o), part 543 in subchapter C of 28 CFR, chapter V is amended as set forth below.

SUBCHAPTER C—INSTITUTIONAL MANAGEMENT

PART 543—LEGAL MATTERS

1. The authority citation for 28 CFR part 543 continues to read as follows:

Authority: 5 U.S.C. 301; 18 U.S.C. 3621, 3622, 3624, 4001, 4042, 4081 (Repealed in part as to offenses committed on or after November 1, 1987), 5006–5024 (Repealed October 12, 1984 as to offenses committed after that date), 5039; 28 U.S.C. 509, 510 1346(b), 2671–80; 28 CFR 0.95–0.99, 0.172, 14.1–11.

2. Subpart C is revised to read as follows:

Subpart C—Federal Tort Claims Act

Sec.
543.30 Purpose and scope.
543.31 Filing a claim.
543.32 Processing the claim.

Subpart C—Federal Tort Claims Act

§ 543.30 Purpose and scope.

Pursuant to the Federal Tort Claims Act, a claim for money damages for personal injury or death and/or damage to or loss of property must be filed against the United States by the injured party with the appropriate Federal agency for administrative action. General provisions for processing administrative claims under the Federal Tort Claims Act are contained in 28 CFR part 14. The provisions in this subpart describe the procedures to follow when filing an administrative tort claim with the Bureau of Prisons.

§ 543.31 Filing a claim.

(a) *Who may file a claim*? You may file a claim if you are the injured person or the owner of the damaged or lost property. A person acting on your behalf as an agent, executor, administrator, parent, guardian, or other representative may file a claim for you if the person provides a written statement signed by you giving that person permission to act for you. A representative may also file a claim for wrongful death. If you hire a lawyer or authorize a representative to act on your behalf, the agency will correspond only with that representative, and will not continue to correspond with you.

(b) *Where do I obtain a form for filing a claim*? You may obtain a form from staff in the Central Office, Regional Offices, Bureau institutions, or staff training centers.

(c) *Where do I file the claim*? You may either mail or deliver the claim to the regional office in the region where the claim occurred. If the loss or injury occurred in a specific regional office or within the geographical boundaries of the region, you may either mail or deliver the claim to that regional office. If the loss or injury occurred in the Central Office, you may either mail or deliver the claim to the Office of General Counsel, Central Office. If the loss or injury occurred in one of the training centers, you may either mail or deliver the claim to the Associate General Counsel, Federal Law Enforcement Training Center. 28 CFR part 503 lists Bureau institutions by region and also contains the addresses of the Central Office, regional offices and training centers.

§ 543.32 Processing the claim.

(a) *Will I receive an acknowledgment letter*? Yes. If you have provided all necessary information to process your claim (such as time, date, and place where the incident occurred, and a specific sum of money you are requesting as damages), you will receive an acknowledgment letter indicating the filing date and a claim number. The filing date is the date your claim was first received by either the Department of Justice or an office of the Bureau of Prisons. You should refer to your claim number in all further correspondences with the agency. Additionally, you must inform the agency of any changes in your address. If you fail to provide all necessary information, your claim will be rejected and returned to you requesting supplemental information.

(b) *Will I be notified if my claim is transferred*? Yes. If your claim is improperly filed, you will be notified by the responsible office that your claim was transferred to another regional office, the Central Office, a training center, or another agency.

(c) *Will an investigation be conducted*? Yes. The regional office ordinarily refers the claim to the appropriate institution or office for investigation. You may also be required to provide additional information during the investigation. Your failure to respond within a reasonable time may result in the rejection or denial of the claim.

(d) *Who will decide my administrative claim*? The Regional Counsel or his or her designee reviews the investigation and the supporting evidence and renders a decision of all claims properly filed in the regional office and within regional settlement authority. The Regional Counsel has limited settlement authority (up to an amount established by the Director, Bureau of Prisons). After considering the merits of the claim, the Regional Counsel may deny or propose a settlement of the claim. The General Counsel will investigate and propose settlement for all claims properly filed in the Central Office in accordance with delegated settlement authority. If the proposed settlement exceeds the General Counsel's authority, the General Counsel will seek approval from the appropriate Department of Justice officers.

(e) *Will my claim be reviewed by or referred to the Central Office*? If the Regional Counsel recommends a proposed settlement in excess of the settlement authority, the claim will be forwarded, with a recommendation, to the Office of General Counsel, Central Office for their review.

(f) *Will appreciation or depreciation be considered*? Yes. Staff will consider appreciation or depreciation of lost or damaged property in settling a claim.

(g) *If my claim is denied or I am dissatisfied with a settlement offer, what are my options*? If your claim is denied or you are dissatisfied with a settlement offer, you may request, in writing, that the Bureau of Prisons reconsider your claim in the administrative stage. You should include additional evidence of injury or loss to support your request for reconsideration. If you are dissatisfied with the final agency action, you may file suit in an appropriate U.S. District

Court as no further administrative action is available.

(h) *What if I accept a settlement of my claim*? If you accept a settlement, you give up your right to bring a lawsuit against the United States or against any employee of the government whose action or lack of action gave rise to your claim.

(i) *How long will it take to get a response*? Generally, you will receive a decision regarding your claim within six months of when you properly file the claim. If you have not received a letter either proposing a settlement or denying your claim within six months after the date your claim was filed, you may assume your claim is denied. You may proceed to file a lawsuit in the appropriate U.S. District Court.

[FR Doc. 00–13300 Filed 5–25–00; 8:45 am]

BILLING CODE 4410–05–P

Federal Register

Friday,
May 26, 2000

Part VII

Department of Transportation

Federal Aviation Administration

14 CFR Part 91

National Parks Air Tour Management; Final Rule

DEPARTMENT OF TRANSPORTATION

Federal Aviation Administration

14 CFR Part 91

National Parks Air Tour Management

AGENCY: Federal Aviation Administration (FAA), DOT.

ACTION: Notice of statutory requirement.

SUMMARY: The FAA publishes this document to inform commercial air tour operators of recent legislation that affects them. The National Parks Air Tour Management act of 2000, part of Public Law 106–181, was signed into law on April 5, 2000. The Act requires operators who conduct commercial air tours under Part 92 over national parks, tribal lands within such parks, or tribal lands abutting such parks to apply to the FAA to obtain a certificate under Part 119, Part 121, or Part 135 to continue these commercial air tour operators. Excluded from this law are parks in Alaska and Grand Canyon national Park and Rocky Mountain National Park. The FAA publishes this document to assist commercial air tour operators, who conduct some air torus under Part 91, in meeting the requirements of the public law.

DATES: By July 5, 2000, commercial air tour operators conducting air tours over national parks or tribal lands under Part 91 must apply to the FAA for certification as an air carrier or commercial operator under Part 119 unless excepted.

ADDRESSES: Part 92 operators conducting commercial air tours must apply for certification to the Flight Standards District Office (FSD) which is located in the geographic area of the operator's principal business office.

FOR FURTHER INFORMATION CONTACT: Howard Nesbitt, Flight Standards Service (AFS–200), Federal Aviation Administration, Seventh and Maryland Streets, SW, Washington, DC 20591; Telephone: (202) 493–4981. Readers who wish more information on national park unit should visit the National Park Service's web at *http://nps.gov/* or call Howie Thompson, National Park Service at (303) 969–2461.

SUPPLEMENTARY INFORMATION:

Background

There are currently 379 units of the National Park System in the United States. The National Park System is defined as any area of land and water administered by the Secretary of the Interior through the National Park Service for park, monument, historic, parkway, recreational, or other purposes. For purposes of the National Parks Air Tour Management Act of 2000, the term ''national park'' includes all of these types, but does not include other lands under National Park Service control that are not specifically designated as units of the National Park System.

In May 1997 the Secretaries of Interior and Transportation established the National Parks Overflights Working Group (NPOWG) to ''define the process to reduce or prevent the adverse effects of commercial sightseeing flight over units of the national park system.'' The NPOWG met from May 1997 until November 1997 and produced a recommendation for rulemaking for the FAA and National Park Service (NPS) to use in drafting a proposed regulation.

Subsequently, the Congress accepted the recommendation that it enact legislation based on the NPOWG's consensus product. The legislation requires that the two agencies work in a cooperative effort to protect the parks.

Operators Conducting Commercial Air Tour Operation Under Part 91

Public Law 106–181, commonly known as the FAA Reauthorization Act, was signed into law on April 5, 2000. Section 803(a) of the FAA Reauthorization Act added Section 40128 to Title 49 of the United States Code. Section 40128(a)(4) of Title 49 of the U.S. Code requires that air tour operators conducting air tour operations under Part 91 (14 CFR Part 91) apply for operating authority under Parts 119, 121, or 135 (14 CFR Parts 119, 121, 135) within 90 days after date of enactment. However, paragraph (a)(3) allows commercial air tour operators to continue operating over parks under Park 91 if such activity is permitted under Part 119, the operator secures a letter of agreement from the Administrator and the national park superintendent for that particular park, and the total number of operations under this exception is limited to not more than 5 flights in any 30-day period. Note that this exception limits the ''total number of operations * * * to not more than 5 flights in any 30-day period over a particular park''. Since § 119.1(e)(2) of Title 14 of the Code of Federal Regulations, which allows sightseeing flights within a 25-mile radius of an airport to be conducted under Part 91, is still in effect, it would apply to these operators. Operators will be allowed to continue to operate over parks and tribal lands if the conditions of 49 U.S.C. Section 40128(a)(3) are met. Commercial air tour operators who conduct air tour flights under Part 91 must apply for certification under Part 119, 121, or 135 unless they wish to continue to operate in compliance with requirements of (a)(3).

The FAA understands that an operator will not be able to obtain a certificate in 90 days Operators should contact their local FSDO for information on certification as an air carrier or commercial operator, in addition to applying for a letter of agreement to operate in the interim. Application may be initiated by phone or facsimile.

Next Actions

The FAA realizes that additional regulations will be needed to establish the altitude by which a commercial air tour operation will be defined. (See 49 U.S.C. 40128(f)(4)(A).) Additional rulemaking will be necessary to establish the competitive bidding process for limited capacity parks. (See 49 U.S.C. § 40128(a)(1)(B).) Congress required the Administrator, in cooperation with the Director of the NPS, to consider several factors in making selections under a competitive bidding process, including quiet technology issues.

Additional rulemaking will also address interim operating authority for commercial air tour operators conducting air tour operations under Part 121 or Part 135.

Because Public Law 106–181 is now in effect, the FAA intends to issue a notice of proposed rulemaking to propose the minimum altitude which would complete the statutory definition of a ''commercial air tour operation.'' See 49 U.S.C. Section 40128(f)(4)(A)(i).

Issued in Washington, DC on May 11, 2000.

L. Nicholas Lacey,

Director, Flight Standards Service.

[FR Doc. 00–13368 Filed 5–24–00; 10:58 am]

BILLING CODE 4910–13–M

Federal Register

Friday,
May 26, 2000

Part VIII

Nuclear Regulatory Commission

Arizona Public Service Company et al.; Consideration of Approval of Application Regarding Proposed Corporate Restructuring of Public Service Company of New Mexico and Conforming Amendments, and Opportunity for a Hearing; Notice

NUCLEAR REGULATORY COMMISSION

[Docket Nos. STN 50–528, stn 50–529, and STN 50–530]

Arizona Public Service Company, et al.; Palo Verde Nuclear Generating Station, Units 1, 2, and 3; Notice of Consideration of Approval of Application Regarding Proposed Corporate Restructuring of Public Service Company of New Mexico and Conforming Amendments, and Opportunity for a Hearing

The U.S. Nuclear Regulatory Commission (the Commission) is considering the issuance of an order under 10 CFR 50.80 approving the indirect transfer of Facility Operating Licenses Nos. NPF–41, NPF–51, and NPF–74 for the Palo Verde Nuclear Generating Station (Palo Verde), Units 1, 2, and 3, respectively, to the extent held by Public Service Company of New Mexico (PNM), one of seven joint owners or lessees of Palo Verde. The indirect transfers would occur in connection with a proposed corporate restructuring of PNM. The Commission is also considering approving conforming license amendments to reflect the proposed renaming of PNM, which is part of the restructuring plan for PNM. The facility is located in Maricopa County, Arizona.

According to an application filed by PNM dated March 3, 2000, the proposed indirect transfers of the Palo Verde licenses as held by PNM would be to a newly created holding company, Manzano Corporation (Manzano). Manzano, which presently exists as a subsidiary of PNM, was formed to eventually become the holding company for PNM to implement the public utility restructuring requirements of the New Mexico Electric Utility Industry Restructuring Act of 1999. The proposed restructuring of PNM encompasses the formation of Manzano as a holding company, the transfer by PNM of its electric and gas transmission and distribution businesses to an affiliated company (with PNM and such affiliated company being under common control by Manzano), and a change in PNM's name to Manzano Energy Corporation (Manzano Energy).

Arizona Public Service Company, the sole licensed operator of the facility, would remain as the managing agent for the joint owners or lessees of the facility and would continue to have exclusive responsibility for the management, operation, and maintenance of Palo Verde. The application does not propose a change in the rights, obligations, or interests of the other licensees of Palo Verde. In addition, no physical changes to Palo Verde or operational changes are being proposed.

By letter dated April 26, 2000, Arizona Public Service Company submitted the associated conforming amendments request. The proposed amendments would reflect the change in the name of Public Service Company of New Mexico to Manzano Energy Corporation in the licenses.

Pursuant to 10 CFR 50.80, no license, or any right thereunder, shall be transferred, directly or indirectly, through transfer of control of the license, unless the Commission shall give its consent in writing. The Commission will approve an application for the indirect transfer of a license if the Commission determines that the underlying transaction that will effectuate the indirect transfer will not affect the qualifications of the holder of the license, and that the transfer is otherwise consistent with applicable provisions of law, regulations, and orders issued by the Commission pursuant thereto.

Before issuance of the proposed conforming license amendments, the Commission will have made findings required by the Atomic Energy Act of 1954, as amended (the Act), and the Commission's regulations.

As provided in 10 CFR 2.1315, unless otherwise determined by the Commission with regard to a specific application, the Commission has determined that any amendment to the license of a utilization facility which does no more than conform the license to reflect the transfer action involves no significant hazards consideration. No contrary determination has been made with respect to this specific license amendment application. In light of the generic determination reflected in 10 CFR 2.1315, no public comments with respect to significant hazards considerations are being solicited, notwithstanding the general comment procedures contained in 10 CFR 50.91.

The filing of requests for hearing and petitions for leave to intervene, and written comments with regard to the license transfer application, are discussed below.

By June 15, 2000, any person whose interest may be affected by the Commission's action on the application may request a hearing, and, if not the applicants, may petition for leave to intervene in a hearing proceeding on the Commission's action. Requests for a hearing and petitions for leave to intervene should be filed in accordance with the Commission's rules of practice set forth in Subpart M, ''Public Notification, Availability of Documents and Records, Hearing Requests and Procedures for Hearings on License Transfer Applications,'' of 10 CFR part 2. In particular, such requests and petitions must comply with the requirements set forth in 10 CFR 2.1306, and should address the considerations contained in 10 CFR 2.1308(a). Untimely requests and petitions may be denied, as provided in 10 CFR 2.1308(b), unless good cause for failure to file on time is established. In addition, an untimely request or petition should address the factors that the Commission will also consider, in reviewing untimely requests or petitions, set forth in 10 CFR 2.1308(b)(1)–(2).

Requests for a hearing and petitions for leave to intervene should be served upon counsel for PNM, Matias F. Travieso-Diaz, Esq., Shaw Pittman, 2300 N Street, NW, Washington, DC 20037; the General Counsel, U.S. Nuclear Regulatory Commission, Washington, DC 20555 (e-mail address for filings regarding license transfer cases only: OGCLT@NRC.gov); and the Secretary of the Commission, U.S. Nuclear Regulatory Commission, Washington, DC 20555–0001, Attention: Rulemakings and Adjudications Staff, in accordance with 10 CFR 2.1313.

The Commission will issue a notice or order granting or denying a hearing request or intervention petition, designating the issues for any hearing that will be held and designating the Presiding Officer. A notice granting a hearing will be published in the **Federal Register** and served on the parties to the hearing.

As an alternative to requests for hearing and petitions to intervene, by June 26, 2000, persons may submit written comments regarding the license transfer application, as provided for in 10 CFR 2.1305. The Commission will consider and, if appropriate, respond to these comments, but such comments will not otherwise constitute part of the decisional record. Comments should be submitted to the Secretary, U.S. Nuclear Regulatory Commission, Washington, DC 20555–0001, Attention: Rulemakings and Adjudications Staff, and should cite the publication date and page number of this **Federal Register** notice.

For further details with respect to this action, see the license transfer application filed by PNM dated March 3, 2000, and the application for the proposed license amendments filed by the Arizona Public Service Company dated April 26, 2000, which are available for public inspection at the Commission's Public Document Room, the Gelman Building, 2120 L Street, NW., Washington, DC, and accessible

electronically through the ADAMS Public Electronic Reading Room link at the NRC Web site *http://www.nrc.gov.*

Dated at Rockville, Maryland this 23rd day of May 2000.

For the Nuclear Regulatory Commission.

Mel B. Fields,

Project Manager, Section 2, Project Directorate IV & Decommissioning, Division of Licensing Project Management, Office of Nuclear Reator Regulation.

[FR Doc. 00–13426 Filed 5–25–00; 8:45 am]

BILLING CODE 7590–01–P

Federal Register

Friday,
May 26, 2000

Part IX

The President

Proclamation 7312—National Maritime Day, 2000

Federal Register
Vol. 65, No. 103
Friday, May 26, 2000

Presidential Documents

Title 3—

The President

Proclamation 7312 of May 22, 2000

National Maritime Day, 2000

By the President of the United States of America

A Proclamation

Americans have always looked to the sea as a source of prosperity and security. Bounded by two oceans and the Gulf of Mexico, with the Great Lakes, the Saint Lawrence Seaway, scores of harbors, ports, and inlets, and thousands of miles of inland river shorelines, our Nation has been blessed with an unparalleled means of moving passengers and freight, protecting our freedom, and linking our citizens with the world.

Today, 95 percent of our imports and exports are moved by water—more than one billion metric tons of cargo—and our waterways currently handle 140 million passengers a year. Our domestic fleet is one of our most productive and cost-effective modes of transportation, moving 24 percent of the Nation's cargo at less than 2 percent of America's total freight cost. The men and women of the U.S. Merchant Marine and the thousands of other workers in our Nation's maritime industry have made immeasurable contributions to our economic strength, standard of living, and leadership in the global marketplace.

The U.S. Merchant Marine plays an equally important role in maintaining our national security. In times of conflict or crisis, the Armed Forces rely upon the Merchant Marine's sealift capability to transport critically needed equipment and supplies. Time and again, American mariners have demonstrated their willingness and ability to meet often daunting challenges. From World War II to Korea to Vietnam, from Desert Storm to the Balkans and in numerous incidents in between, the U.S. Merchant Marine has responded with courage, patriotism, and a steadfast devotion to duty.

The 21st century will hold new challenges for our maritime industry, including an anticipated doubling of cargo and passenger traffic in the next two decades. If we are to meet those challenges, we must maintain a robust U.S.-flag fleet, crewed by American mariners. Last September, the Secretary of Transportation presented to the Congress a blueprint for modernizing our Marine Transportation System—the waterways, ports, railways, and roads that move people and goods to, from, and on the water. We must build more and better ships, modernize our shipyards, create deeper ports for today's ever larger containerships and ocean liners, and maintain a skilled maritime workforce. We must also ensure that local, State, and Federal agencies, the U.S. military, the maritime industry, shippers, labor unions, environmental groups, and other concerned organizations work in partnership to carry out this blueprint.

As we celebrate National Maritime Day this year, we also mark the 50th anniversary of the U.S. Maritime Administration. Throughout the past five decades, the dedicated men and women of this agency have worked to improve the competitiveness of our maritime industry in world markets and to strengthen our ability to respond swiftly and effectively in times of crisis. On behalf of a grateful Nation, I salute these outstanding public servants for their commitment to the U.S. Merchant Marine and to the shipbuilding, repair services, ports, and intermodal water and land transportation systems they need to function efficiently.

In recognition of the importance of the U.S. Merchant Marine to our Nation's prosperity and security, the Congress, by a joint resolution approved May 20, 1933, has designated May 22 of each year as ''National Maritime Day'' and has authorized and requested the President to issue annually a proclamation calling for its appropriate observance.

NOW, THEREFORE, I, WILLIAM J. CLINTON, President of the United States of America, do hereby proclaim May 22, 2000, as National Maritime Day. I urge all Americans to observe this day with appropriate programs, ceremonies, and activities and by displaying the flag of the United States in their homes and in their communities. I also request that all merchant ships sailing under the American flag dress ship on that day.

IN WITNESS WHEREOF, I have hereunto set my hand this twenty-second day of May, in the year of our Lord two thousand, and of the Independence of the United States of America the two hundred and twenty-fourth.

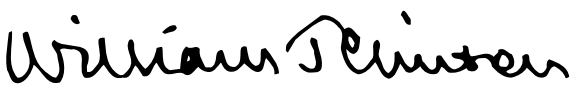

[FR Doc. 00–13499
Filed 5–25–00; 8:45 am]
Billing code 3195–01–P

Federal Register

Friday,
May 26, 2000

Part X

The President

Notice of May 25, 2000—Continuation of Emergency With Respect to the Federal Republic of Yugoslavia (Serbia and Montenegro), the Bosnian Serbs, and Kosovo

Federal Register
Vol. 65, No. 103
Friday, May 26, 2000

Presidential Documents

Title 3—

The President

Notice of May 25, 2000

Continuation of Emergency With Respect to the Federal Republic of Yugoslavia (Serbia and Montenegro), the Bosnian Serbs, and Kosovo

In accordance with section 202(d) of the National Emergencies Act (50 U.S.C. 1622(d)), I am continuing for 1 year the national emergency declared on May 30, 1992, with respect to the Federal Republic of Yugoslavia (Serbia and Montenegro), as expanded on October 25, 1994, in response to the actions and policies of the Bosnian Serbs. In addition, I am continuing for 1 year the national emergency declared on June 9, 1998, with respect to the Federal Republic of Yugoslavia's policies and actions in Kosovo. This notice shall be published in the **Federal Register** and transmitted to the Congress.

On May 30, 1992, by Executive Order 12808, President Bush declared a national emergency to deal with the unusual and extraordinary threat to the national security, foreign policy, and economy of the United States constituted by the actions and policies of the Governments of Serbia and Montenegro, blocking all property and interests in property of those Governments. President Bush took additional measures to prohibit trade and other transactions with the Federal Republic of Yugoslavia (Serbia and Montenegro) by Executive Orders 12810 and 12831, issued on June 5, 1992, and January 15, 1993, respectively, and on April 25, 1993, I issued Executive Order 12846 imposing additional measures.

On October 25, 1994, I expanded the scope of the national emergency by issuing Executive Order 12934 to address the unusual and extraordinary threat to the national security, foreign policy, and economy of the United States posed by the actions and policies of the Bosnian Serb forces and the authorities in the territory that they controlled within Bosnia and Herzegovina.

On December 27, 1995, I issued Presidential Determination 96–7, directing the Secretary of the Treasury, *inter alia*, to suspend the application of sanctions imposed on the Federal Republic of Yugoslavia (Serbia and Montenegro) pursuant to the above-referenced Executive orders and to continue to block property previously blocked until provision is made to address claims or encumbrances, including the claims of the other successor states of the former Yugoslavia. This sanctions relief, in conformity with United Nations Security Council Resolution 1022 of November 22, 1995 (hereinafter the ''Resolution''), was an essential factor motivating Serbia and Montenegro's acceptance of the General Framework Agreement for Peace in Bosnia and Herzegovina initialed by the parties in Dayton on November 21, 1995, and signed in Paris on December 14, 1995 (hereinafter the ''Peace Agreement''). The sanctions imposed on the Federal Republic of Yugoslavia (Serbia and Montenegro) were accordingly suspended prospectively, effective January 16, 1996. Sanctions imposed on the Bosnian Serb forces and authorities and on the territory that they control within Bosnia and Herzegovina were subsequently suspended prospectively, effective May 10, 1996, also in conformity with the Peace Agreement and the Resolution. Sanctions against both the Federal Republic of Yugoslavia (Serbia and Montenegro) and the Bosnian Serbs were subsequently terminated by United Nations Security Council Resolution 1074 of October 1, 1996. This termination, however, did not end the requirement of the Resolution that those blocked funds

and assets that are subject to claims and encumbrances remain blocked, until unblocked in accordance with applicable law.

Until the status of all remaining blocked property is resolved, the Peace Agreement implemented, and the terms of the Resolution met, the national emergency declared on May 30, 1992, as expanded in scope on October 25, 1994, must continue beyond May 30, 2000.

On June 9, 1998, by Executive Order 13088, I found that the actions and policies of the Federal Republic of Yugoslavia (Serbia and Montenegro) and the Republic of Serbia with respect to Kosovo, by promoting ethnic conflict and human suffering, threatened to destabilize countries in the region and to disrupt progress in Bosnia and Herzegovina in implementing the Dayton peace agreement, constituted an unusual and extraordinary threat to the national security and foreign policy of the United States. I therefore declared a national emergency to deal with that threat. On April 30, 1999, I issued Executive Order 13121 to take additional steps with respect to the continuing human rights and humanitarian crisis in Kosovo and the national emergency declared with respect to Kosovo. Because the crisis with respect to the situation in Kosovo has not been resolved, I have determined that it is necessary to maintain in force these emergency authorities beyond June 9, 2000.

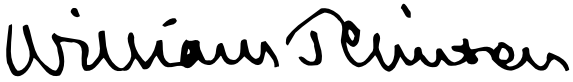

THE WHITE HOUSE,
May 25, 2000.

[FR Doc. 00–13540
Filed 5–25–00; 1:01 pm]
Billing code 3195–01–P

Reader Aids

Federal Register

Vol. 65, No. 103

Friday, May 26, 2000

CUSTOMER SERVICE AND INFORMATION

Federal Register/Code of Federal Regulations

General Information, indexes and other finding aids	**202–523–5227**
Laws	**523–5227**
Presidential Documents	
Executive orders and proclamations	**523–5227**
The United States Government Manual	**523–5227**
Other Services	
Electronic and on-line services (voice)	**523–4534**
Privacy Act Compilation	**523–3187**
Public Laws Update Service (numbers, dates, etc.)	**523–6641**
TTY for the deaf-and-hard-of-hearing	**523–5229**

ELECTRONIC RESEARCH

World Wide Web

Full text of the daily Federal Register, CFR and other publications:

http://www.access.gpo.gov/nara

Federal Register information and research tools, including Public Inspection List, indexes, and links to GPO Access:

http://www.nara.gov/fedreg

E-mail

PENS (Public Law Electronic Notification Service) is an E-mail service for notification of recently enacted Public Laws. To subscribe, send E-mail to

listserv@www.gsa.gov

with the text message:

subscribe PUBLAWS-L your name

Use listserv@www.gsa.gov only to subscribe or unsubscribe to PENS. We cannot respond to specific inquiries.

Reference questions. Send questions and comments about the Federal Register system to:

info@fedreg.nara.gov

The Federal Register staff cannot interpret specific documents or regulations.

FEDERAL REGISTER PAGES AND DATE, MAY

25233–25434 1
25435–25622 2
25623–25828 3
25829–26116 4
26117–26480 5
26481–26730 8
26731–26940 9
29941–30334 10
30335–30520 11
30521–30828 12
30829–31072 15
31073–31244 16
31245–31426 17
31427–31782 18
31783–32006 19
32007–33246 22
33247–33428 23
33429–33736 24
33737–34038 25
34039–34380 26

CFR PARTS AFFECTED DURING MAY

At the end of each month, the Office of the Federal Register publishes separately a List of CFR Sections Affected (LSA), which lists parts and sections affected by documents published since the revision date of each title.

3 CFR

Proclamations:
7297 25821
7298 25823
7299 25825
7300 25827
7301 26113
7302 26117
7303 26481
7304 30335
7305 30827
7306 30829
7307 31071
7308 31783
7309 33247
7310 33429
7311 33431
7312 34375

Executive Orders:
January 19, 1917 (Revoked by PLO 7444) 30429
10977 (See EO 13154) 26479
11478 (Amended by EO 13152) 26115
12808 (See Notice of May 25, 2000) 34379
12810 (See Notice of May 25, 2000) 34379
12831 (See Notice of May 25, 2000) 34379
12846 (See Notice of May 25, 2000) 34379
12871 (Amended by EO 13156) 31785
12934 (See Notice of May 25, 2000) 34379
12983 (See EO 13156) 31785
12985 (See EO 13154) 26479
13047 (See Notice of May 18, 2000) 32005
13088 (See Notice of May 25, 2000) 34379
13121 (See Notice of May 25, 2000) 34379
13149 (See Proc. 7308) 31783
13151 25619
13152 26115
13153 26475
13154 26479
13155 30521
13156 31785
13157 34035

Administrative Orders:
Notice of May 18, 2000 32005

Notices:
May 25, 2000 34379

Presidential Determinations:
No. 96-7 (See Notice of May 25, 2000) 34379

4 CFR

Ch. I 33737

5 CFR

317 33738
351 25623
532 .....26119, 26120, 30821
630 26483
1201 25623

Proposed Rules:
536 33785

7 CFR

2 31245
29 34039
47 29941
54 34040
210 .....26904, 31371
220 26904
245 31427
272 33433
274 33433
277 33433
301 .....26487, 30337, 31245
360 33741
361 33741
400 29941
945 25625
959 29942
981 25233
985 .....30341, 32007
989 30525
993 29945
1001 32010
1005 32010
1006 32010
1007 32010
1126 32010
1131 32010
1135 32010
1205 25236
1220 30832
1436 30345
1710 31246
1728 34042
1951 31248

Proposed Rules:
90 34302
91 34302
92 34302
93 34302
94 34302
98 34302
305 34113
319 .....30365, 34113
360 31289
930 32044
958 30920
1220 30922

1240 30924
1710 31289
1735 33787
1792 34125

9 CFR

Proposed Rules:
77 25292
94 31290
590 26148

10 CFR

Ch. XVIII 30833
72 25241
420 25265
810 26278
Proposed Rules:
Ch. 1 26772
32 26148
50 ....30550, 31837
76 30018
431 30929

11 CFR

Proposed Rules:
104 ....25672, 31787
111 31787

12 CFR

201 34047
361 31250
563 30527
563c 30527
563g 30527
614 ....26278, 33743
707 32010
716 31722
741 31722
790 25266
900 25267
917 25267
940 25267
1735 26731
Proposed Rules:
35 31962
207 31962
226 33499
346 31962
533 31962
611 26776
900 ....25676, 26518, 34127
917 26518
926 26518
940 ....25676, 34127
944 26518
950 ....25676, 26518, 34127
952 26518
955 ....25676, 34127
956 ....25676, 34127
961 26518
980 26518
1710 33790

13 CFR

121 30836
124 33249

14 CFR

25 25435
39 ....25278, 25280, 25281, 25437, 25627, 25829, 25833, 26121, 26122, 26124, 26735, 26738, 30527, 30529, 30532, 30534, 30536, 30538, 30539, 30863, 30865, 30874, 31253, 31255, 31256, 31259, 32011, 32013, 32015,32016, 32018, 32021, 33441, 33444, 33743, 33745, 34048, 34054, 34055, 34059, 34061, 34063, 34065, 34069, 34322, 34341
71 ....25439, 25440, 26126, 26128, 30541, 30876, 30877, 30878, 30879, 32023, 33250, 33614, 33749, 33750
91 ....31214, 31798, 33751, 34368
93 33751
95 26740
97 ....25838, 25842, 31427, 31798
121 ....26128, 33751
129 33751
135 33751
Proposed Rules:
23 30936
39 ....25694, 25696, 25892, 26149, 26152, 26781, 26783, 30019, 30021, 30023, 30025, 30028, 30031, 30033, 30553, 31109, 31113, 31291, 31837, 31839
71 ....25455, 25456, 25457, 26154, 26155, 26156, 26157, 26158, 26160, 26785, 26786, 26787, 26788, 30036, 30678, 31504, 32046, 32047, 33796
121 33720
135 33720

15 CFR

742 34073
743 34073
746 34073
772 34073
774 34073
902 31430
Proposed Rules:
301 30555
922 ....31634, 32048

16 CFR

305 30351
313 33646
Proposed Rules:
307 26534
310 26161

17 CFR

4 25980
231 25843
232 34079
241 25843
270 25630
271 25843
Proposed Rules:
240 26534

18 CFR

388 33446

19 CFR

12 33251
19 31260
24 31261
101 31262
122 31263
159 31261
162 33254
174 31261

20 CFR

404 31800
Proposed Rules:
217 30366
335 26161
403 30037

21 CFR

10 25440
13 25440
14 25440
15 25440
25 30352
176 34081
177 26744
178 ....26129, 26746
200 34082
203 25639
205 25639
510 25641
522 26747
884 31454
1301 30541
Proposed Rules:
2 26789
16 26162
25 30366
900 26162

22 CFR

123 34089
Proposed Rules:
706 30369

23 CFR

450 31803
668 25441
771 31803
Proposed Rules:
450 33922
655 33994
771 33960
940 33994
1410 33922
1420 33960
1430 33960

24 CFR

84 30498
583 30822
905 25445
Proposed Rules:
2003 32240
3280 31778
3282 31778

25 CFR

Proposed Rules:
38 26728

26 CFR

1 ....31073, 31078, 31805, 32152, 33753
31 32152
48 26488
Proposed Rules:
1 ....26542, 31115, 31118, 31841, 31853, 33504

27 CFR

275 31079
Proposed Rules:
9 31853

28 CFR

522 34362
543 34362

29 CFR

4022 30880
4044 30880
Proposed Rules:
1910 33263

30 CFR

250 25284
914 34092
917 29949
936 34094
948 26130

31 CFR

210 33449
560 25642
Proposed Rules:
10 30375

32 CFR

701 31456
727 26748
767 31079
Ch. XXIX 30542
Proposed Rules:
701 31505

33 CFR

100 ....25446, 25644, 31083, 31086, 33255, 33760
110 ....31083, 31086, 31091, 32023, 33255, 33760
117 ....25446, 25645, 25646, 29954, 30881, 31478, 33449
155 31806
165 ....26489, 26750, 29954, 30883, 30884, 31086, 31091, 31479, 31813, 32023, 33255, 33258, 33449, 33450, 33760, 33770
Proposed Rules:
117 ....30043, 30938
165 ....25458, 25980, 30376, 31293, 34127
167 31856
334 33426

34 CFR

674 26136
Proposed Rules:
100 26464
104 26464
106 26464
110 26464
300 30314

36 CFR

327 26136
Proposed Rules:
294 ....30276, 30288
1253 26542

37 CFR

1 33452
Proposed Rules:
201 ....25894, 33266
202 26162

39 CFR

20 ....29955, 34096
111 ....26750, 31815
913 31265
952 32026
Proposed Rules:
111 ....26792, 31118, 31506

40 CFR

9.....25982, 26491
22.....30885
52 .....29956, 29959, 30355, 30358, 31093, 31267, 31480, 31482, 31485, 31489, 32028, 32030, 32033, 33259, 33455, 33772, 34101
60.....32033
62 .....25447, 33461, 34104
63 .....26491, 34010, 34012
70.....32035
81.....29959
117.....30885
122.....30885
123.....30885
124.....30885
125.....30885
131.....31682
141.....25982
142.....25982
143.....25982
144.....30885
180 .....25647, 25652, 25655, 25660, 25857, 25860, 29963, 30543, 33260, 33469, 33472, 33692, 33703
185.....33692, 33703
186.....33692, 33703
228.....30545, 31492
261.....31096, 32214
270.....39885
271 .....26750, 26755, 29973, 29981, 33774
300.....30482, 31821
444.....33423
721.....30912

Proposed Rules:

51.....31858, 33268
52 .....26792, 30045, 30387, 31120, 31297, 31507, 32057, 33280
55.....34129
61.....26932
62.....25460, 33504
63 .....26544, 34252, 34278
81.....30045, 31859
141.....25894, 30194
142.....25894, 30194
239.....26544
271 .....26802, 30046, 33797
300 .....25292, 26803, 30489, 31864, 32058
403.....26550
430.....31120

41 CFR

Ch. 301 31824
101–43.....31218
102–36 ....31218, 33778, 33889

Proposed Rules:

60–1.....26088
60–2.....26088

42 CFR

414.....25664
447.....33616
457.....33616

Proposed Rules:

9.....25894
405.....31124
412.....26282
413.....26282
485.....26282
1001.....32060
1003.....25460

43 CFR

4.....25449

Proposed Rules:

2930.....31234
3800.....31234
8340.....31234
8370.....31234
8560.....31234
9260.....31234

44 CFR

64.....30545

Proposed Rules:

206.....31129

45 CFR

92.....33616
95.....33616

Proposed Rules:

1159.....31864

46 CFR

32.....31806
515.....26506, 33479
520.....26506
530.....26506
535.....26506
545.....33480

Proposed Rules

520.....31130

47 CFR

1.....29985, 31270
11.....29985
22.....25451
24.....25452
51.....33480
54 .....25864, 26513, 33480
73 .....25450, 25453, 25669, 25865, 29985, 30547, 31100, 31101, 31498, 33778, 33779
74.....29985
79.....26757

Proposed Rules:

20.....33506
64.....33281
73 .....25463, 25697, 25865, 30046, 30047, 30558, 31130, 31131, 33798, 33799

48 CFR

219.....30191
235.....32040
241.....32040
252.....32041
1516.....31498
1552.....31498
1804.....31101
1806.....31101
1815.....30012, 31101
1819.....30012
1823.....31101
1832.....31101
1845.....31101
1852.....30012

Proposed Rules:

2.....30311
11.....30311
15.....30311
17.....33428
23.....30311
32.....25614
42.....30311
52.....25614
209.....32065
215.....32066
223.....32065
552.....33799
1503.....25899
1552.....25899
570.....33799
1803.....32069
1852.....32069
5433.....31131
5452.....31131

49 CFR

1.....34105
173.....30914
178.....30914
209.....33262
230.....33262
391.....25285
541.....34106
552.....30680
571.....30680, 30915
575.....33481
585.....30680
595.....30680
619.....31803
622.....31803

Proposed Rules:

350 .....26166, 32070, 34132
359.....25540
390 .....25540, 26166, 32070, 34132
394 .....25540, 26166, 32070, 34132
395 .....25540, 26166, 32070, 34132
398 .....25540, 26166, 32070, 34132
538.....26805
571.....33508
613.....33922
621.....33922
622.....33960
623.....33960

50 CFR

17 .....25867, 26438, 26762
21.....30918
32.....30772
216.....34014
222 .....25670, 31500, 33779
223 .....25670, 31500, 33779
300.....30014
600 .....25881, 31283, 31430, 33423
622 .....30362, 30547, 31827, 31831
648 .....25887, 30548, 31836, 32042, 33486
654.....31831
660 .....25881, 26138, 31283, 33423
679 .....25290, 25671, 30549, 31103, 31104, 31105, 31107, 31288, 33779

Proposed Rules:

10.....26664
13.....26664
17 .....26664, 30048, 30941, 30951, 31298, 31870, 33283
23.....26664
224.....26167
622 .....31132, 31507, 33801
635 .....26876, 33513, 33517, 33519
660.....31871
679 .....30559, 32070, 34133
697.....25698

REMINDERS

The items in this list were editorially compiled as an aid to Federal Register users. Inclusion or exclusion from this list has no legal significance.

RULES GOING INTO EFFECT MAY 26, 2000

COMMERCE DEPARTMENT

Export Administration Bureau

Export administration regulations:

Commerce Control List; revisions and clarifications; published 5-26-00

ENVIRONMENTAL PROTECTION AGENCY

Air programs:

Stratospheric ozone protection—

Ozone-depleting substances; substitutes list; published 4-26-00

HEALTH AND HUMAN SERVICES DEPARTMENT

Food and Drug Administration

Food additives:

Paper and paperboard components—

Sodium xylenesulfonate; published 5-26-00

INTERIOR DEPARTMENT

Surface Mining Reclamation and Enforcement Office

Permanent program and abandoned mine land reclamation plan submissions:

Indiana; published 5-26-00

Oklahoma; published 5-26-00

TRANSPORTATION DEPARTMENT

Organization, functions, and authority delegations:

Maritime Administration Administrator; published 5-26-00

TRANSPORTATION DEPARTMENT

National Highway Traffic Safety Administration

Motor vehicle theft prevention standard:

High-theft vehicle lines for 2001 model year; published 5-26-00¶

RULES GOING INTO EFFECT MAY 28, 2000

POSTAL SERVICE

International Mail Manual:

International surface mail; postal rate changes; published 5-10-00

Priority Mail Global Guaranteed; enhanced expedited service from selected U.S.locations to selected European countries; published 5-26-00¶

RULES GOING INTO EFFECT MAY 29, 2000

COMMERCE DEPARTMENT

Patent and Trademark Office

Patent cases:

Application examiniation and provisional application practice; changes; published 3-20-00

TRANSPORTATION DEPARTMENT

Federal Aviation Administration

Airworthiness directives:

Industrie Aeronautiche e Meccaniche; published 4-11-00

COMMENTS DUE NEXT WEEK

AGRICULTURE DEPARTMENT

Animal and Plant Health Inspection Service

Exportation and importation of animals and animal products:

Horses from contagious equine meritis (CEM)-affected countries—

Spain; Spanish Pure Breed horses; comments due by 6-2-00; published 4-3-00

AGRICULTURE DEPARTMENT

Food Safety and Inspection Service

Egg products inspection; fee increase; comments due by 6-1-00; published 5-5-00

ARCHITECTURAL AND TRANSPORTATION BARRIERS COMPLIANCE BOARD

Electronic and information technology accessibility standards; comments due by 5-30-00; published 3-31-00

COMMERCE DEPARTMENT

National Oceanic and Atmospheric Administration

Fishery conservation and management:

Atlantic coastal fisheries cooperative management—

Atlantic Coast horseshoe crab; comments due by 6-2-00; published 5-3-00

Caribbean, Gulf, and South Atlantic fisheries—

Gulf of Mexico and South Atlantic coastal migratory pelagic resources; comments due by 5-31-00; published 5-16-00

Ocean and coastal resource management:

Coastal Zone Management Act Federal consistency regulations; comments due by 5-30-00; published 4-14-00

COMMERCE DEPARTMENT

Patent and Trademark Office

Patent cases:

Twenty-year patent term; patent term adjustment; implementation; comments due by 5-30-00; published 3-31-00

DEFENSE DEPARTMENT

Federal Acquisition Regulation (FAR):

Competitive negotiated acquisitions; discussion requirements; comments due by 6-2-00; published 4-3-00

Procurement integrity rewrite; comments due by 5-30-00; published 3-29-00

EDUCATION DEPARTMENT

Grants:

Direct grant programs; discretionary grants; application review process; comments due by 6-1-00; published 4-17-00

ENERGY DEPARTMENT

Energy Efficiency and Renewable Energy Office

Consumer products; energy conservation program:

Fluorescent lamp ballasts—

Energy conservation standards; comments due by 5-30-00; published 3-15-00

ENVIRONMENTAL PROTECTION AGENCY

Air programs; approval and promulgation; State plans for designated facilities and pollutants:

Oklahoma; comments due by 6-1-00; published 5-2-00

Clean Air Act:

Accidental release prevention requirements; risk management programs; distribution of off-site consequence analysis information; comments due by 5-30-00; published 4-27-00

Hazardous waste:

Project XL program; site-specific projects—

Minnesota; comments due by 5-30-00; published 5-8-00

Pesticides; tolerances in food, animal feeds, and raw agricultural commodities:

Fenthion, etc.; comments due by 5-30-00; published 3-31-00

Superfund program:

National oil and hazardous substances contingency plan—

National priorities list update; comments due by 5-31-00; published 5-1-00

FEDERAL COMMUNICATIONS COMMISSION

Radio stations; table of assignments:

Tennessee and Alabama; comments due by 5-30-00; published 4-19-00

Texas; comments due by 5-30-00; published 4-19-00

Various States; comments due by 5-30-00; published 4-19-00

FEDERAL ELECTION COMMISSION

Reports by political committees:

Election cycle reporting by authorized committees; comments due by 6-2-00; published 5-3-00

FEDERAL HOUSING FINANCE BOARD

Federal home loan bank system:

Acquired member assets, core mission activities, and investments and advances; comments due by 6-2-00; published 5-3-00

FEDERAL TRADE COMMISSION

Telemarketing sales rules; comments due by 5-30-00; published 5-5-00

GENERAL SERVICES ADMINISTRATION

Federal Acquisition Regulation (FAR):

Competitive negotiated acquisitions; discussion requirements; comments due by 6-2-00; published 4-3-00

Procurement integrity rewrite; comments due by

5-30-00; published 3-29-00

HOUSING AND URBAN DEVELOPMENT DEPARTMENT

Mortgage and loan insurance programs:

Title I Property Improvement and Manufactured Home Loan Insurance programs and Title I lender/Title II mortgagee approval requirements; comments due by 5-30-00; published 3-30-00

Public and Indian housing:

Public housing agency plans; poverty deconcentration and public housing integration (''One America''); comments due by 6-1-00; published 4-17-00

INTERIOR DEPARTMENT

Fish and Wildlife Service

Endangered and threatened species:

San Diego ambrosia; comments due by 5-30-00; published 3-30-00

Migratory bird hunting:

Seasons, limits, and shooting hours; establishment, etc.; comments due by 6-2-00; published 4-25-00

INTERIOR DEPARTMENT

Surface Mining Reclamation and Enforcement Office

Permanent program and abandoned mine land reclamation plan submissions:

Maryland; comments due by 5-30-00; published 4-28-00

JUSTICE DEPARTMENT

Immigration and Naturalization Service

Nationality:

Naturalization grants; revocation; comments due by 5-30-00; published 3-31-00

JUSTICE DEPARTMENT

Clean Air Act:

Accidental release prevention requirements; risk management programs; distribution of off-site consequence analysis information; comments due by 5-30-00; published 4-27-00

NATIONAL AERONAUTICS AND SPACE ADMINISTRATION

Federal Acquisition Regulation (FAR):

Competitive negotiated acquisitions; discussion requirements; comments due by 6-2-00; published 4-3-00

Procurement integrity rewrite; comments due by 5-30-00; published 3-29-00

TRANSPORTATION DEPARTMENT

Coast Guard

Ports and waterways safety:

OPSAIL 2000, New York Harbor, NY; safety zones; comments due by 5-31-00; published 5-17-00

Regattas and marine parades:

Eighth Coast Guard District annual marine events; comments due by 5-30-00; published 4-28-00

TRANSPORTATION DEPARTMENT

Federal Aviation Administration

Airworthiness directives:

Bell; comments due by 5-30-00; published 3-30-00

Bombardier; comments due by 5-30-00; published 4-28-00

Eurocopter France; comments due by 5-30-00; published 3-28-00

General Electric Co.; comments due by 6-2-00; published 4-3-00

McDonnell Douglas; comments due by 6-1-00; published 4-17-00

New Piper Aircraft, Inc.; comments due by 6-2-00; published 3-30-00

TREASURY DEPARTMENT

Customs Service

Organization and functions; field organizations, ports of entry, etc.:

Milwaukee and Racine, WI; ports consolidation; comments due by 5-30-00; published 3-28-00

TREASURY DEPARTMENT

Internal Revenue Service

Income taxes:

Tax shelter disclosure statements; cross-reference; comments due by 5-31-00; published 3-2-00

Tax-exempt organizations; taxation of income from corporate sponsorship; comments due by 5-30-00; published 3-1-00

Procedure and administration:

Corporate tax shelter registration; cross-reference; comments due by 5-31-00; published 3-2-00

Investors in potentially abusive tax shelters; requirements to maintain list; cross-reference; comments due by 5-31-00; published 3-2-00

VETERANS AFFAIRS DEPARTMENT

Vocational rehabilitation and education:

Veterans education—

Flight-training programs; information collection; comments due by 6-2-00; published 4-3-00

LIST OF PUBLIC LAWS

This is a continuing list of public bills from the current session of Congress which have become Federal laws. It may be used in conjunction with ''P L U S'' (Public Laws Update Service) on 202–523–6641. This list is also available online at http://www.nara.gov/fedreg.

The text of laws is not published in the **Federal Register** but may be ordered in ''slip law'' (individual pamphlet) form from the Superintendent of Documents, U.S. Government Printing Office, Washington, DC 20402 (phone, 202–512–1808). The text will also be made available on the Internet from GPO Access at http://www.access.gpo.gov/nara/index.html. Some laws may not yet be available.

H.R. 2412/P.L. 106–203

To designate the Federal building and United States courthouse located at 1300 South Harrison Street in Fort Wayne, Indiana, as the ''E. Ross Adair Federal Building and United States Courthouse''. (May 22, 2000; 114 Stat. 310)

S. 2370/P.L. 106–204

To designate the Federal building located at 500 Pearl Street in New York City, New York, as the ''Daniel Patrick Moynihan United States Courthouse''. (May 23, 2000; 114 Stat. 311)

Last List May 22, 2000

Public Laws Electronic Notification Service (PENS)

PENS is a free electronic mail notification service of newly enacted public laws. To subscribe, go to www.gsa.gov/archives/publaws-l.html or send E-mail to **listserv@www.gsa.gov** with the following text message:

SUBSCRIBE PUBLAWS-L Your Name.

Note: This service is strictly for E-mail notification of new laws. The text of laws is not available through this service. **PENS** cannot respond to specific inquiries sent to this address.