AUTHENTICATED
U.S. GOVERNMENT
INFORMATION
GPO

Federal Register

5–4–00 Thursday
Vol. 65 No. 87 May 4, 2000
Pages 25829–26116

The **FEDERAL REGISTER** is published daily, Monday through Friday, except official holidays, by the Office of the Federal Register, National Archives and Records Administration, Washington, DC 20408, under the Federal Register Act (44 U.S.C. Ch. 15) and the regulations of the Administrative Committee of the Federal Register (1 CFR Ch. I). The Superintendent of Documents, U.S. Government Printing Office, Washington, DC 20402 is the exclusive distributor of the official edition.

The **Federal Register** provides a uniform system for making available to the public regulations and legal notices issued by Federal agencies. These include Presidential proclamations and Executive Orders, Federal agency documents having general applicability and legal effect, documents required to be published by act of Congress, and other Federal agency documents of public interest.

Documents are on file for public inspection in the Office of the Federal Register the day before they are published, unless the issuing agency requests earlier filing. For a list of documents currently on file for public inspection, see http://www.nara.gov/fedreg.

The seal of the National Archives and Records Administration authenticates the Federal Register as the official serial publication established under the Federal Register Act. Under 44 U.S.C. 1507, the contents of the **Federal Register** shall be judicially noticed.

The **Federal Register** is published in paper and on 24x microfiche. It is also available online at no charge as one of the databases on GPO Access, a service of the U.S. Government Printing Office.

The online edition of the **Federal Register** is issued under the authority of the Administrative Committee of the Federal Register as the official legal equivalent of the paper and microfiche editions (44 U.S.C. 4101 and 1 CFR 5.10). It is updated by 6 a.m. each day the **Federal Register** is published and it includes both text and graphics from Volume 59, Number 1 (January 2, 1994) forward.

GPO Access users can choose to retrieve online **Federal Register** documents as TEXT (ASCII text, graphics omitted), PDF (Adobe Portable Document Format, including full text and all graphics), or SUMMARY (abbreviated text) files. Users should carefully check retrieved material to ensure that documents were properly downloaded.

On the World Wide Web, connect to the **Federal Register** at http://www.access.gpo.gov/nara. Those without World Wide Web access can also connect with a local WAIS client, by Telnet to swais.access.gpo.gov, or by dialing (202) 512-1661 with a computer and modem. When using Telnet or modem, type swais, then log in as guest with no password.

For more information about GPO Access, contact the GPO Access User Support Team by E-mail at gpoaccess@gpo.gov; by fax at (202) 512–1262; or call (202) 512–1530 or 1–888–293–6498 (toll free) between 7 a.m. and 5 p.m. Eastern time, Monday–Friday, except Federal holidays.

The annual subscription price for the **Federal Register** paper edition is $638, or $697 for a combined **Federal Register,** Federal Register Index and List of CFR Sections Affected (LSA) subscription; the microfiche edition of the **Federal Register** including the Federal Register Index and LSA is $253. Six month subscriptions are available for one-half the annual rate. The charge for individual copies in paper form is $9.00 for each issue, or $9.00 for each group of pages as actually bound; or $2.00 for each issue in microfiche form. All prices include regular domestic postage and handling. International customers please add 25% for foreign handling. Remit check or money order, made payable to the Superintendent of Documents, or charge to your GPO Deposit Account, VISA, MasterCard or Discover. Mail to: New Orders, Superintendent of Documents, P.O. Box 371954, Pittsburgh, PA 15250–7954.

There are no restrictions on the republication of material appearing in the **Federal Register.**

How To Cite This Publication: Use the volume number and the page number. Example: 65 FR 12345.

SUBSCRIPTIONS AND COPIES

PUBLIC	
Subscriptions:	
Paper or fiche	**202–512–1800**
Assistance with public subscriptions	**512–1806**
General online information	**202–512–1530; 1–888–293–6498**
Single copies/back copies:	
Paper or fiche	**512–1800**
Assistance with public single copies	**512–1803**
FEDERAL AGENCIES	
Subscriptions:	
Paper or fiche	**523–5243**
Assistance with Federal agency subscriptions	**523–5243**

FEDERAL REGISTER WORKSHOP

THE FEDERAL REGISTER: WHAT IT IS AND HOW TO USE IT

FOR: Any person who uses the Federal Register and Code of Federal Regulations.

WHO: Sponsored by the Office of the Federal Register.

WHAT: Free public briefings (approximately 3 hours) to present:

1. The regulatory process, with a focus on the Federal Register system and the public's role in the development regulations.
2. The relationship between the Federal Register and Code of Federal Regulations.
3. The important elements of typical Federal Register documents.
4. An introduction to the finding aids of the FR/CFR system.

WHY: To provide the public with access to information necessary to research Federal agency regulations which directly affect them. There will be no discussion of specific agency regulations.

WASHINGTON, DC

WHEN: May 23, 2000 at 9:00 am.

WHERE: Office of the Federal Register
Conference Room, Suite 700
800 North Capitol Street, NW.
Washington, DC
(3 blocks north of Union Station Metro)

RESERVATIONS: 202–523–4538

Printed on recycled paper.

Contents

Federal Register

Vol. 65, No. 87

Thursday, May 4, 2000

Agency for Healthcare Research and Quality
NOTICES
Agency information collection activities:
Submission for OMB review; comment request, 25926–25928

Agriculture Department
See Forest Service
See Rural Telephone Bank
NOTICES
Agency information collection activities:
Submission for OMB review; comment request, 25901–25903

Air Force Department
NOTICES
Meetings:
Community College Board of Visitors, 25913

Arts and Humanities, National Foundation
See National Foundation on the Arts and the Humanities

Centers for Disease Control and Prevention
NOTICES
Agency information collection activities:
Proposed collection; comment request, 25928
Clinical Laboratory Improvement Amendments:
Human genetic testing, 25928–25934
Grants and cooperative agreements; availability, etc.:
Autism spectrum disorders and other developmental disabilities; population-based surveillance, 25934–25936
C. Everett Koop Community Health Information Center; national model for physician-based community health information centers, 25936–25938

Civil Rights Commission
NOTICES
Meetings; Sunshine Act, 25905

Coast Guard
PROPOSED RULES
Ports and waterways safety:
Staten Island, NY; safety zone
Correction, 25980
NOTICES
Agency information collection activities:
Submission for OMB review; comment request, 25973–25974
Aquatic Nuisance Species Task Force; recommendations:
Zebra mussels and other aquatic nuisance species; recreational activities to control spread; voluntary guidelines; correction, 25980

Commerce Department
See Foreign-Trade Zones Board
See International Trade Administration
See National Oceanic and Atmospheric Administration

Commodity Futures Trading Commission
RULES
Commodity pool operators and commodity trading advisors:
Commodity pool operator definition; exclusion of certain otherwise regulated persons
Correction, 25980

Copyright Office, Library of Congress
PROPOSED RULES
Digital Millennium Copyright Act:
Circumvention of copyright protection systems for access control technologies; exemption to prohibition, 25894

Defense Department
See Air Force Department

Education Department
NOTICES
Agency information collection activities:
Submission for OMB review; comment request, 25913–25914

Employment and Training Administration
NOTICES
Adjustment assistance:
Cross Creek Apparel, Inc., 25944–25945
Fahnos Apparel, Inc., 25945
New Monarch Machine Tool, Inc., 25945
Outboard Marine Corp., 25945–25946
Reo Plating, Inc., et al., 25946–25947
Rochester Button Co., 25947
Vesuvius Premier Refractories, 25947
Adjustment assistance and NAFTA transitional adjustment assistance:
Cooper Energy Services, 25947–25948
Sherman Lumber Co., 25948
NAFTA transitional adjustment assistance:
Homemaker Industries, Inc., 25947
Mineral Ridge Resources, Inc., 25949
Superior-Essex, 25948
Talon, Inc., 25948–25949

Energy Department
See Federal Energy Regulatory Commission

Environmental Protection Agency
RULES
Pesticides; tolerances in food, animal feeds, and raw agricultural commodities:
Azoxystrobin, 25860–25864
Cyromazine, 25857–25860
Water supply:
National primary drinking water regulations—Public notification requirements, 25981–26049
PROPOSED RULES
Acquisition regulations:
Inspector General Office Hotline posters within contractor work areas; display requirements, 25899–25900

Water supply:
National primary drinking water regulations—
Ground Water Rule, 25894
NOTICES
Project XL (excellence and leadership) innovative technologies projects:
International Paper Project, ME, 25920–25921
Toxic and hazardous substances control:
Asbestos-containing materials in schools; State waiver requests—
Oklahoma, 25921–25923
Lead-based paint activities in target housing and child-occupied facilities; State and Indian Tribe authorization applications—
Minnesota, 25923–25924
Water pollution control:
Total maximum daily loads—
Mermentau and Vermilion/Teche river basin, LA; determinations that TMLDs are not needed, 25924

Executive Office of the President
See Management and Budget Office
See Presidential Documents
See Trade Representative, Office of United States

Federal Aviation Administration
RULES
Airworthiness directives:
Boeing, 25829–25838
Standard instrument approach procedures, 25838–25843
PROPOSED RULES
Airworthiness directives:
General Electric Aircraft Engines, 25892–25893
NOTICES
Airport Privatization Pilot Program; applications:
Rafael Hernandez Airport, PR; correction, 25974
Aviation proceedings:
Certificates of public convenience and necessity and foreign air carrier permits; weekly applications, 25974–25975

Federal Communications Commission
RULES
Common carrier services:
Federal-State Joint Board on Universal Service—
Carrier-imposed charges inclusion in contribution base; challenges denied, 25864–25865
Digital television stations; table of assignments:
New York, 25865–25867
PROPOSED RULES
Television broadcasting:
Children's television programming; filing requirements extended, 25895–25899

Federal Contract Compliance Programs Office
PROPOSED RULES
Affirmative action and nondiscrimination obligations of contractors and subcontractors:
Affirmative action programs; requirements, 26087–26109

Federal Election Commission
NOTICES
Meetings; Sunshine Act, 25924

Federal Energy Regulatory Commission
NOTICES
Electric rate and corporate regulation filings:
Portland General Elecric Company et al., 25916
Potomac Edison Co. et al., 25916–25919
Hydroelectric applications, 25919–25920
Applications, hearings, determinations, etc.:
Transcontinental Gas Pipe Line Corp., 25914–25915
Vermont Yankee Nuclear Power Corp. et al., 25915

Federal Maritime Commission
NOTICES
Agreements filed, etc., 25924–25925
Ocean transportation intermediary licenses:
BDP Transport, LLC, et al., 25925

Federal Mine Safety and Health Review Commission
NOTICES
Meetings; Sunshine Act, 25962

Federal Railroad Administration
NOTICES
Meetings:
Railroad Safety Advisory Committee, 25975

Fish and Wildlife Service
RULES
Endangered and threatened species:
Yacare caiman, etc.; reclassification, 25867–25881
NOTICES
Meetings:
Aquatic Nuisance Species Task Force, 25939

Food and Drug Administration
NOTICES
Meetings:
Harmonization International Conference; pharmaceuticals for human use registration requirements, 25938–25939

Foreign-Trade Zones Board
NOTICES
Applications, hearings, determinations, etc.:
Idaho, 25905
New York
Newburgh Dye & Printing, Inc., et al.; textile processing facilities, 25905–25906

Forest Service
NOTICES
Environmental statements; notice of intent:
Tongass National Forest, AK, 25903–25904

General Services Administration
NOTICES
Meetings:
President's Commission on Celebration of Women in American History, 25925

Health and Human Services Department
See Agency for Healthcare Research and Quality
See Centers for Disease Control and Prevention
See Food and Drug Administration
See Health Care Financing Administration
See Substance Abuse and Mental Health Services Administration
NOTICES
Agency information collection activities:
Proposed collection; comment request, 25925–25926
Meetings:
Vital and Health Statistics National Committee, 25926

Health Care Financing Administration
NOTICES
Agency information collection activities:
Proposed collection; comment request, 25939

Interior Department
See Fish and Wildlife Service
See Land Management Bureau
See National Park Service

International Trade Administration
NOTICES
Antidumping:
Coumarin from—
China, 25906
Honey from—
China, 25907
Large diameter carbon and alloy seamless standard, line, and pressure pipe, etc., from—
Japan and South Africa, 25907–25908
Stainless steel bar from—
Various countries, 25909–25910
Countervailing duties:
Pure and alloy magnesium from—
Canada, 25910–25912
Applications, hearings, determinations, etc.:
University of—
North Dakota; correction, 25980

International Trade Commission
NOTICES
Import investigations:
Safety eyewear and components, 25941–25942
Meetings; Sunshine Act, 25942

Justice Department
See National Institute of Justice

Labor Department
See Employment and Training Administration
See Federal Contract Compliance Programs Office
See Pension and Welfare Benefits Administration
NOTICES
Agency information collection activities:
Submission for OMB review; comment request, 25942–25943
Meetings:
Presidential Task Force on Employment of Adults with Disabilities, 25944
President's Committee on International Labor Organization, 25943–25944

Land Management Bureau
NOTICES
Oil and gas leases:
Colorado, 25939–25940
Realty actions; sales, leases, etc.:
Wyoming, 25940
Recreation management restrictions, etc.:
Wonder Valley, CA; recreational shooting restriction; supplemental rule, 25940–25941

Library of Congress
See Copyright Office, Library of Congress

Management and Budget Office
NOTICES
Commercial activities performance (Circular A-76):
Federal pay raise assumptions and inflation factors update (Transmittal Memorandum No. 21), 25967–25968
Revised Supplemental Handbook; technical changes, 25966–25967

Mine Safety and Health Federal Review Commission
See Federal Mine Safety and Health Review Commission

National Aeronautics and Space Administration
NOTICES
Meetings:
Advisory Council
Life and Microgravity Sciences and Applications Advisory Committee, 25962
Patent licenses; non-exclusive, exclusive, or partially exclusive:
USA Video Interactive, Corp., 25962

National Credit Union Administration
NOTICES
Meetings; Sunshine Act, 25962

National Foundation on the Arts and the Humanities
NOTICES
Meetings; Sunshine Act, 25963

National Highway Traffic Safety Administration
NOTICES
Motor vehicle safety standards; exemption petitions, etc.:
Ford Motor Co., 25975–25976

National Institute of Justice
NOTICES
Grants and cooperative agreements; availability, etc.:
Comprehensive Indian Resources for Community and Law Enforcement (CIRCLE) Project; evaluation, 25942

National Oceanic and Atmospheric Administration
RULES
Fishery conservation and management:
Northeastern United States fisheries—
Spiny dogfish, 25887–25891
West Coast States and Western Pacific fisheries—
Groundfish, 25881–25887
NOTICES
Marine mammal permit applications, 25912–25913

National Park Service
NOTICES
Reports and guidance documents; availability, etc.:
Standard concession contract; revision, 26051–26086

Nuclear Regulatory Commission
NOTICES
Environmental statements; availability, etc.:
Iowa State University, 25964–25965
Applications, hearings, determinations, etc.:
Baltimore Gas & Electric Co., 25963–25964

Occupational Safety and Health Review Commission
NOTICES
Agency information collection activities:
Submission for OMB review; comment request, 25965–25966

Office of Management and Budget
See Management and Budget Office

Office of United States Trade Representative
See Trade Representative, Office of United States

Pension and Welfare Benefits Administration
NOTICES
Employee benefit plans; prohibited transaction exemptions:
Earl R. Waddell & Sons, Inc., 25949–25954
Fortis, Inc., 25954–25962

Presidential Documents
PROCLAMATIONS
Special observances:
Older Americans Month (Proc. 7301), 26113–26114
EXECUTIVE ORDERS
Government agencies and employees:
Equal employment opportunity; amendment (EO 13152), 26115

Public Health Service
See Agency for Healthcare Research and Quality
See Centers for Disease Control and Prevention
See Food and Drug Administration
See Substance Abuse and Mental Health Services Administration

Rural Telephone Bank
NOTICES
Meetings; Sunshine Act, 25904–25905

Securities and Exchange Commission
RULES
Securities and investment companies:
Electronic media use; guidance, 25843–25857
NOTICES
Investment Company Act of 1940:
Exemption application—
Cohesion Technologies, Inc., 25968–25969

State Department
NOTICES
Grants and cooperative agreements; availability, etc.:
Southeast Europe Youth Leadership Program, 25970–25972

Substance Abuse and Mental Health Services Administration
PROPOSED RULES
Opiate addiction; opioid drugs in maintenance and detoxification treatment; office-based treatment; partial agonists treatment medications; use conditions, 25894–25895

Surface Transportation Board
NOTICES
Railroad operation, acquisition, construction, etc.:
Entergy Arkansas and Entergy Rail, 25976
Heart of Georgia Railroad, Inc., 25976–25977

Trade Representative, Office of United States
NOTICES
Generalized System of Preferences:
Nigeria; beneficiary developing country designation criteria, 25972

Transportation Department
See Coast Guard
See Federal Aviation Administration
See Federal Railroad Administration
See National Highway Traffic Safety Administration
See Surface Transportation Board
NOTICES
Aviation proceedings:
Agreements filed; weekly receipts, 25972–25973
Certificates of public convenience and necessity and foreign air carrier permits; weekly applications, 25973

Veterans Affairs Department
NOTICES
Agency information collection activities:
Proposed collection; comment request, 25977–25978
Privacy Act:
Computer matching programs, 25978–25979
Systems of records, 25979

Separate Parts In This Issue

Part II
Environmental Protection Agency, 25981–26049

Part III
National Park Service, Department of the Interior, 26051–26086

Part IV
Federal Contract Compliance Programs Office, Department of Labor, 26087–26109

Part V
Presidential Documents, 26111–26115

Reader Aids
Consult the Reader Aids section at the end of this issue for phone numbers, online resources, finding aids, reminders, and notice of recently enacted public laws.

CFR PARTS AFFECTED IN THIS ISSUE

A cumulative list of the parts affected this month can be found in the Reader Aids section at the end of this issue.

3 CFR

Proclamations:
7301 26113

Executive Orders:
13152 26115

14 CFR
39 (2 documents) 25829, 25833
97 (2 documents) 25838, 25842

Proposed Rules:
39 25892

17 CFR
4 025980
231 25843
241 25843
271 24843

33 CFR

Proposed Rules:
165 25980

37 CFR

Proposed Rules:
201 25894

40 CFR
9 25982
141 25982
142 25982
143 25982
180 (2 documents) 25857, 15860

Proposed Rules:
141 25894
142 25894

41 CFR

Proposed Rules:
60–1 26088
60–2 26088

42 CFR

Proposed Rules:
9 25894

47 CFR
54 25864
73 25865

Proposed Rules:
73 25895

48 CFR

Proposed Rules:
1503 25899
1552 25899

50 CFR
17 25867
600 25881
648 25887
660 25881

Rules and Regulations

Federal Register
Vol. 65, No. 87
Thursday, May 4, 2000

This section of the FEDERAL REGISTER contains regulatory documents having general applicability and legal effect, most of which are keyed to and codified in the Code of Federal Regulations, which is published under 50 titles pursuant to 44 U.S.C. 1510.

The Code of Federal Regulations is sold by the Superintendent of Documents. Prices of new books are listed in the first FEDERAL REGISTER issue of each week.

DEPARTMENT OF TRANSPORTATION

Federal Aviation Administration

14 CFR Part 39

[Docket No. 2000–NM–93–AD; Amendment 39–11711; AD 2000–09–03]

RIN 2120–AA64

Airworthiness Directives; Boeing Model 747–400 Series Airplanes Equipped With General Electric CF6–80C2 Series Engines

AGENCY: Federal Aviation Administration, DOT.

ACTION: Final rule; request for comments.

SUMMARY: This amendment supersedes an existing airworthiness directive (AD), applicable to certain Boeing Model 747–400 series airplanes, that currently requires various inspections and functional tests to detect discrepancies of the thrust reverser control and indication system, and correction of any discrepancy found. This amendment adds an appendix and revises certain actions in the existing AD. This amendment is prompted by a report indicating that completion of the cone brake test of the center drive unit is ineffective for certain airplanes. The actions specified in this AD are intended to ensure the integrity of the fail safe features of the thrust reverser system by preventing possible failure modes in the thrust reverser control system that can result in inadvertent deployment of a thrust reverser during flight.

DATES: Effective May 19, 2000.

The incorporation by reference of certain publications, as listed in the regulations, was previously approved by the Director of the Federal Register as of March 13, 2000 (65 FR 5742, February 7, 2000).

Comments for inclusion in the Rules Docket must be received on or before July 3, 2000.

ADDRESSES: Submit comments in triplicate to the Federal Aviation Administration (FAA), Transport Airplane Directorate, ANM–114, Attention: Rules Docket No. 2000–NM–93–AD, 1601 Lind Avenue, SW., Renton, Washington 98055–4056.

The service information referenced in this AD may be obtained from Boeing Commercial Airplane Group, P.O. Box 3707, Seattle, Washington 98124–2207. This information may be examined at the FAA, Transport Airplane Directorate, 1601 Lind Avenue, SW., Renton, Washington; or at the Office of the **Federal Register**, 800 North Capitol Street, NW., suite 700, Washington, DC.

FOR FURTHER INFORMATION CONTACT: Holly Thorson, Aerospace Engineer, Propulsion Branch, ANM–140S, FAA, Transport Airplane Directorate, Seattle Aircraft Certification Office, 1601 Lind Avenue, SW., Renton, Washington 98055–4056; telephone (425) 227–1357; fax (425) 227–1181.

SUPPLEMENTARY INFORMATION: On January 28, 2000, the FAA issued AD 2000–02–33, amendment 39–11551 (65 FR 5742, February 7, 2000), applicable to certain Boeing Model 747–400 series airplanes, to require various inspections and functional tests to detect discrepancies of the thrust reverser control and indication system, and correction of any discrepancy found. That action was prompted by reports indicating that several center drive units (CDU) were returned to the manufacturer of the CDU's because of low holding torque of the CDU cone brake. The actions required by that AD are intended to ensure the integrity of the fail safe features of the thrust reverser system by preventing possible failure modes in the thrust reverser control system that can result in inadvertent deployment of a thrust reverser during flight.

Actions Since Issuance of Previous Rule

Since the issuance of AD 2000–02–33, the FAA has received information indicating the following:

- Completion of the functional test of the CDU cone brake as referenced in the existing AD is ineffective for Model 747–400 series airplanes having a third locking system installed on the thrust reversers. The test for those airplanes requires an additional step to unlock the electro-mechanical brake prior to accomplishment of the functional test of the cone brake of the center drive unit. This step was omitted from the functional test described in the service bulletins and referenced in paragraph (a) of the existing AD. Therefore, Appendix 1 (including Figure 1) has been added to this AD to provide accurate instructions for airplanes that have a third locking system installed. Paragraph (a) of this AD has been revised to reference Appendix 1 (including Figure 1) as the appropriate source of service information for those airplanes.
- The grace period of 650 flight hours to accomplish the functional test of the cone brake of the CDU is expected to expire for most airplanes by May or June 2000. For airplanes that have been modified to incorporate the third locking system, this would allow accomplishment of an invalid test with potentially misleading results. The valid functional test as described in Appendix 1 (including Figure 1) of this AD imposes no additional burden.
- The previously approved alternative methods of compliance (AMOC) as referenced in paragraph (d)(2) of the existing AD should not have been included in the final rule. The notice of proposed rulemaking was issued as a supersedure, but the final rule was issued as a separate rulemaking action that addressed only those airplanes equipped with General Electric CF6–80C2 series engines; therefore, the AMOC's previously approved in accordance with AD 94–15–05, amendment 39–8976 (59 FR 37655, July 25, 1994), and specified in paragraph (d)(2) of the existing AD, are not applicable. Paragraph (d)(2) of the existing AD has been revised accordingly.
- Paragraph (a) of the existing AD states, ''Within 1,000 hours time-in-service after the most recent test of the CDU cone brake performed in accordance with paragraph (b)(1) of AD 94–15–05; or within 650 hours time-in-service after the effective date of this AD, whichever occurs first * * *'' The manufacturer has submitted documentation showing similar requirements are contained in paragraph (a) of AD 2000–02–20, amendment 39–11551, which is applicable to Model 767 series airplanes, and which gives the

operator a longer compliance time. In that AD, the grace period for the compliance time reads, ''* * * or within 650 hours time-in-service after the effective date of this AD, whichever occurs later * * *'' Therefore, in light of the information received, the FAA has revised paragraph (a) of this AD accordingly.

Explanation of Requirements of Rule

Since an unsafe condition has been identified that is likely to exist or develop on other airplanes of this same type design, this AD supersedes AD 2000–02–33 to continue to require various inspections and functional tests to detect discrepancies of the thrust reverser control and indication system, and correction of any discrepancy found. This AD also adds an appendix and revises certain actions in the existing AD.

Determination of Rule's Effective Date

Since a situation exists that requires the immediate adoption of this regulation, it is found that notice and opportunity for prior public comment hereon are impracticable, and that good cause exists for making this amendment effective in less than 30 days.

Comments Invited

Although this action is in the form of a final rule that involves requirements affecting flight safety and, thus, was not preceded by notice and an opportunity for public comment, comments are invited on this rule. Interested persons are invited to comment on this rule by submitting such written data, views, or arguments as they may desire.

Communications shall identify the Rules Docket number and be submitted in triplicate to the address specified under the caption **ADDRESSES**. All communications received on or before the closing date for comments will be considered, and this rule may be amended in light of the comments received. Factual information that supports the commenter's ideas and suggestions is extremely helpful in evaluating the effectiveness of the AD action and determining whether additional rulemaking action would be needed.

Comments are specifically invited on the overall regulatory, economic, environmental, and energy aspects of the rule that might suggest a need to modify the rule. All comments submitted will be available, both before and after the closing date for comments, in the Rules Docket for examination by interested persons. A report that summarizes each FAA-public contact concerned with the substance of this AD will be filed in the Rules Docket.

Commenters wishing the FAA to acknowledge receipt of their comments submitted in response to this rule must submit a self-addressed, stamped postcard on which the following statement is made: ''Comments to Docket Number 2000–NM–93–AD.'' The postcard will be date stamped and returned to the commenter.

Regulatory Impact

The regulations adopted herein will not have a substantial direct effect on the States, on the relationship between the national Government and the States, or on the distribution of power and responsibilities among the various levels of government. Therefore, it is determined that this final rule does not have federalism implications under Executive Order 13132.

The FAA has determined that this regulation is an emergency regulation that must be issued immediately to correct an unsafe condition in aircraft, and that it is not a ''significant regulatory action'' under Executive Order 12866. It has been determined further that this action involves an emergency regulation under DOT Regulatory Policies and Procedures (44 FR 11034, February 26, 1979). If it is determined that this emergency regulation otherwise would be significant under DOT Regulatory Policies and Procedures, a final regulatory evaluation will be prepared and placed in the Rules Docket.

A copy of it, if filed, may be obtained from the Rules Docket at the location provided under the caption **ADDRESSES**.

List of Subjects in 14 CFR Part 39

Air transportation, Aircraft, Aviation safety, Incorporation by reference, Safety.

Adoption of the Amendment

Accordingly, pursuant to the authority delegated to me by the Administrator, the Federal Aviation Administration amends part 39 of the Federal Aviation Regulations (14 CFR part 39) as follows:

PART 39—AIRWORTHINESS DIRECTIVES

1. The authority citation for part 39 continues to read as follows:

Authority: 49 U.S.C. 106(g), 40113, 44701.

§ 39.13 [Amended]

2. Section 39.13 is amended by removing amendment 39–11551 (65 FR 5742, February 7, 2000), and by adding a new airworthiness directive (AD), amendment 39–11711, to read as follows:

2000–09–03 Boeing: Amendment 39–11711. Docket 2000–NM–93–AD. Supersedes AD 2000–02–33, Amendment 39–11551.

Applicability: Model 747–400 series airplanes equipped with General Electric (GE) CF6–80C2 series engines, certificated in any category.

Note 1: This AD applies to each airplane identified in the preceding applicability provision, regardless of whether it has been modified, altered, or repaired in the area subject to the requirements of this AD. For airplanes that have been modified, altered, or repaired so that the performance of the requirements of this AD is affected, the owner/operator must request approval for an alternative method of compliance in accordance with paragraph (d) of this AD. The request should include an assessment of the effect of the modification, alteration, or repair on the unsafe condition addressed by this AD; and, if the unsafe condition has not been eliminated, the request should include specific proposed actions to address it.

Compliance: Required as indicated, unless accomplished previously.

To ensure the integrity of the fail safe features of the thrust reverser system by preventing possible failure modes in the thrust reverser control system that can result in inadvertent deployment of a thrust reverser during flight, accomplish the following:

Repetitive Functional Tests

(a) Within 1,000 hours time-in-service after the most recent test of the center drive unit (CDU) cone brake as specified in paragraph (b)(1) of AD 94–15–05, amendment 39–8976; or within 650 hours time-in-service after the effective date of this AD; whichever occurs later: Perform a functional test to detect discrepancies of the CDU cone brake on each thrust reverser as specified in paragraph (a)(1) or (a)(2) of this AD, as applicable.

(1) For Model 747–400 series airplanes equipped with thrust reversers that have NOT been modified in accordance with Boeing Service Bulletin 747–78–2151 or a production equivalent: Perform the test in accordance with Boeing Service Bulletin 747–78A2166, Revision 1, dated October 9, 1997; or the applicable section of paragraph III.A. of the Accomplishment Instructions of Boeing Service Bulletin 747–78A2113, Revision 2, dated June 8, 1995, or Revision 3, dated September 11, 1997. Repeat the test thereafter at intervals not to exceed 650 hours time-in-service.

(2) For Model 747–400 series airplanes equipped with thrust reversers that HAVE been modified in accordance with Boeing Service Bulletin 747–78–2151 or a production equivalent: Perform the test in accordance with Appendix 1 (including Figure 1) of this AD. Repeat the test thereafter at intervals not to exceed 1,000 hours time-in-service.

Note 2: Accomplishment of the CDU cone brake test during production in accordance with Production Revision Record (PRR) 80452–102 prior to the effective date of this AD is considered acceptable for compliance

with the initial test required by paragraph (a) of this AD.

Note 3: Model 747–400 series airplanes, line numbers 1061 and subsequent, equipped with GE CF6–80C2 engines, had a third locking system installed during production in accordance with Production Revision Record (PRR) 80452–102, and were not modified in accordance with Boeing Service Bulletin 747–78–2151 (which is a retrofit action for airplanes having line numbers 700 through 1060 inclusive).

Terminating Action

(b) Accomplishment of the functional test of the CDU cone brake, as specified in paragraph (a) of this AD, constitutes terminating action for the repetitive tests of the CDU cone brake required by paragraph (b)(1) of AD 94–15–05.

Corrective Action

(c) If any functional test required by paragraph (a) of this AD cannot be successfully performed as specified in the referenced service bulletin, or if any discrepancy is detected during any functional test required by paragraph (a) of this AD, accomplish either paragraph (c)(1) or (c)(2) of this AD.

(1) Prior to further flight, repair in accordance with Boeing Service Bulletin 747–78A2166, Revision 1, dated October 9, 1997; or Boeing Service Bulletin 747–78A2113, Revision 2, dated June 8, 1995, or Revision 3, dated September 11, 1997.

Or,

(2) The airplane may be operated in accordance with the provisions and limitations specified in the operator's FAA-approved MEL, provided that no more than one thrust reverser on the airplane is inoperative.

Alternative Methods of Compliance

(d)(1) An alternative method of compliance or adjustment of the compliance time that provides an acceptable level of safety may be used if approved by the Manager, Seattle Aircraft Certification Office (ACO), FAA, Transport Airplane Directorate. Operators shall submit their requests through an appropriate FAA Principal Maintenance Inspector, who may add comments and then send it to the Manager, Seattle ACO.

(2) Alternative methods of compliance approved previously in accordance with AD 2000–02–33, Amendment 39–11551, are considered to be approved as alternative methods of compliance with this AD.

Note 4: Information concerning the existence of approved alternative methods of compliance with this AD, if any, may be obtained from the Seattle ACO.

Special Flight Permits

(e) Special flight permits may be issued in accordance with sections 21.197 and 21.199 of the Federal Aviation Regulations (14 CFR 21.197 and 21.199) to operate the airplane to a location where the requirements of this AD can be accomplished.

Incorporation by Reference

(f) Except as provided by paragraphs (a)(2) and (c)(2) of this AD, the actions shall be done in accordance with Boeing Service Bulletin 747–78A2166, Revision 1, dated October 9, 1997; Boeing Service Bulletin 747–78A2113, Revision 2, dated June 8, 1995; and Boeing Service Bulletin 747–78A2113, Revision 3, dated September 11, 1997. This incorporation by reference was previously approved by the Director of the Federal Register as of March 13, 2000 (65 FR 5742, February 7, 2000). Copies may be obtained from Boeing Commercial Airplane Group, P.O. Box 3707, Seattle, Washington 98124–2207. Copies may be inspected at the FAA, Transport Airplane Directorate, 1601 Lind Avenue, SW., Renton, Washington; or at the Office of the Federal Register, 800 North Capitol Street, NW., suite 700, Washington, DC.

(g) This amendment becomes effective on May 19, 2000.

Appendix 1.—Thrust Reverser CDU Cone Brake Test

1. This procedure contains steps to do a check of the holding torque of the CDU cone brake.

2. CDU cone brake check (Figure 1):

A. Prepare to do the check:

(1) Open the fan cowl panels.

(2) Pull up on the manual release handle to unlock the electro-mechanical brake.

(3) Pull the manual brake release lever on the CDU to release the cone brake.

Note: This will release the pre-load tension that may occur during a stow cycle.

(4) Return the manual brake release lever to the locked position to engage the cone brake.

(5) Remove the two bolts that hold the lockout plate to the CDU and remove the lockout plate.

(6) Install a ¼-inch drive and a dial-type torque wrench into the CDU drive pad.

CAUTION: DO NOT USE MORE THAN 100 POUND-INCHES OF TORQUE WHEN YOU DO THIS CHECK. EXCESSIVE TORQUE WILL DAMAGE THE CDU.

(7) Turn the torque wrench to try to manually extend the translating cowl until you get at least 15 pound-inches.

Note: The cone brake prevents movement in the extend direction only. If you try to measure the holding torque in the retract direction, you will get a false reading.

(8) If the torque is less than 15 pound-inches, you must replace the CDU.

(9) Reinstall the lockout plate.

B. Return the airplane to its usual condition:

(1) Fully retract the thrust reverser (unless already accomplished).

(2) Pull down on the manual release handle on the electro-mechanical brake until the handle fully engages the retaining clip (unless already accomplished).

Note: This will lock the electro-mechanical brake.

(3) Close the fan cowl panels.

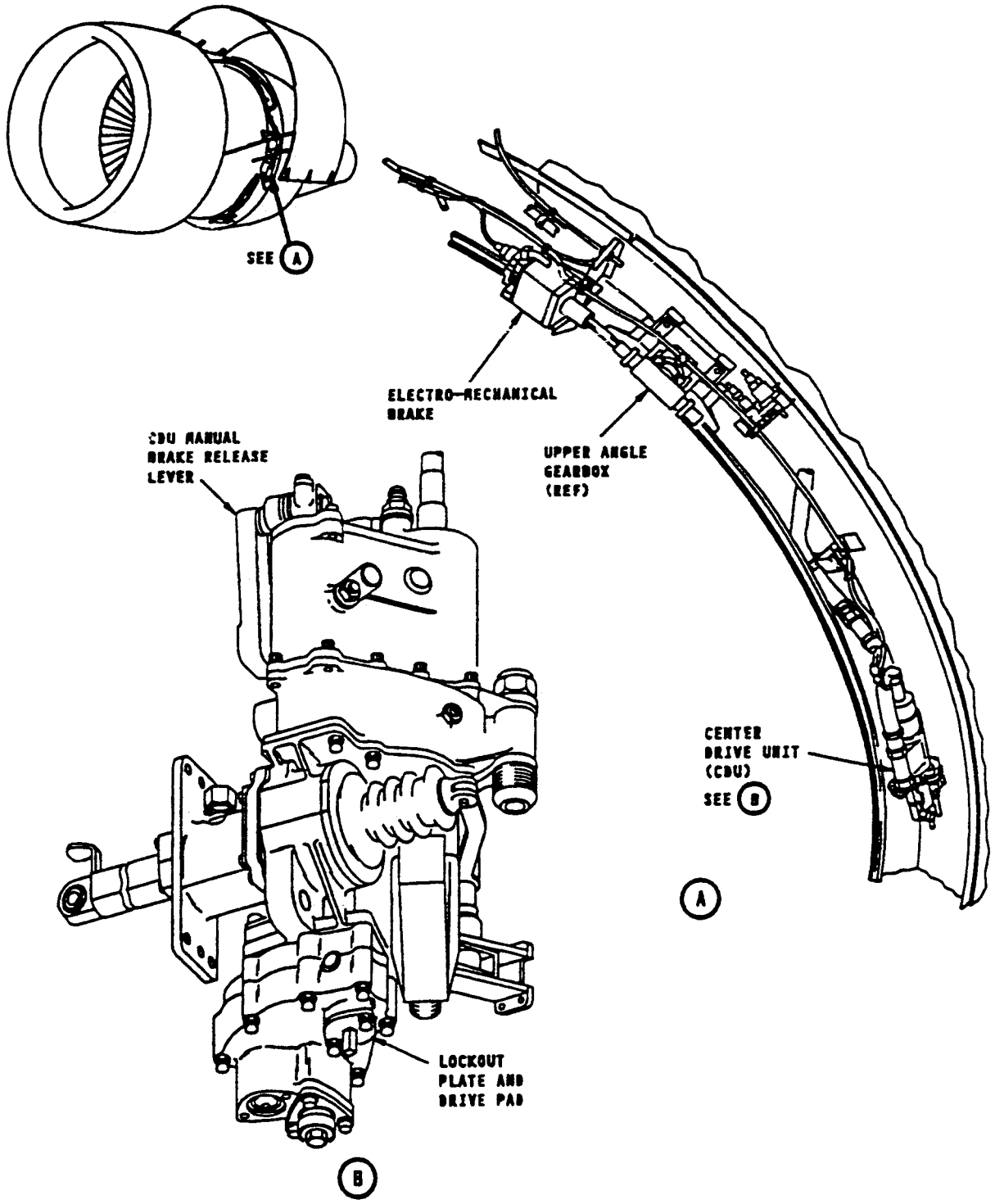

Electro-Mechanical Brake and CDU Cone Brake Torque Check
Figure 1

Issued in Renton, Washington, on April 26, 2000.

Donald L. Riggin,

Acting Manager, Transport Airplane Directorate, Aircraft Certification Service.

[FR Doc. 00–11060 Filed 5–3–00; 8:45 am]

BILLING CODE 4910–13–P

DEPARTMENT OF TRANSPORTATION

Federal Aviation Administration

14 CFR Part 39

[Docket No. 2000–NM–94–AD; Amendment 39–11712; AD 2000–09–04]

RIN 2120–AA64

Airworthiness Directives; Boeing Model 767 Series Airplanes Equipped with General Electric Model CF6–80C2 Series Engines

AGENCY: Federal Aviation Administration, DOT.

ACTION: Final rule; request for comments.

SUMMARY: This amendment supersedes an existing airworthiness directive (AD), applicable to certain Boeing Model 767 series airplanes, that currently requires tests, inspections, and adjustments of the thrust reverser system. That AD also requires installation of a terminating modification, and repetitive follow-on actions. This amendment revises certain actions in the existing AD. This amendment is prompted by a report indicating that certain instructions referenced in the existing AD for accomplishment of the cone brake test of the center drive unit are not accurate for certain airplanes. The actions specified in this AD are intended to ensure the integrity of the fail safe features of the thrust reverser system by preventing possible failure modes in the thrust reverser control system that can result in inadvertent deployment of a thrust reverser during flight.

DATES: Effective May 19, 2000.

The incorporation by reference of Boeing Service Bulletin 767–78A0081, Revision 1, dated October 9, 1997, was previously approved by the Director of the Federal Register, as of March 9, 2000 (65 FR 5229, February 3, 2000).

The incorporation by reference of Boeing Service Bulletin 767–78–0047, Revision 3, dated July 28, 1994; and Boeing Service Bulletin 767–78–0063, Revision 2, dated April 28, 1994; was previously approved by the Director of the Federal Register, as of August 18, 1995 (60 FR 36976, July 19, 1995).

Comments for inclusion in the Rules Docket must be received on or before July 3, 2000.

ADDRESSES: Submit comments in triplicate to the Federal Aviation Administration (FAA), Transport Airplane Directorate, ANM–114, Attention: Rules Docket No. 2000–NM–94–AD, 1601 Lind Avenue, SW., Renton, Washington 98055–4056.

The service information referenced in this AD may be obtained from Boeing Commercial Airplane Group, P.O. Box 3707, Seattle, Washington 98124–2207. This information may be examined at the FAA, Transport Airplane Directorate, 1601 Lind Avenue, SW., Renton, Washington; or at the Office of the Federal Register, 800 North Capitol Street, NW., suite 700, Washington, DC.

FOR FURTHER INFORMATION CONTACT: Holly Thorson, Aerospace Engineer, Propulsion Branch, ANM–140S, FAA, Transport Airplane Directorate, Seattle Aircraft Certification Office, 1601 Lind Avenue, SW., Renton, Washington 98055–4056; telephone (425) 227–1357; fax (425) 227–1181.

SUPPLEMENTARY INFORMATION: On January 24, 2000, the FAA issued AD 2000–02–20, amendment 39–11538 (65 FR 5229, February 3, 2000), applicable to certain Boeing Model 767 series airplanes, to require tests, inspections, and adjustments of the thrust reverser system. That action also requires installation of a terminating modification, and repetitive follow-on actions. That action was prompted by reports indicating that several center drive units (CDU's) of the thrust reverser system were returned to the manufacturer of the CDU's because of low holding torque of the CDU cone brake. The actions required by that AD are intended to ensure the integrity of the fail safe features of the thrust reverser system by preventing possible failure modes in the thrust reverser control system that can result in inadvertent deployment of a thrust reverser during flight.

Actions Since Issuance of Previous Rule

Since the issuance of AD 2000–02–20, the FAA has received information indicating that the functional test that is described in Boeing Service Bulletin 767–78A0081, Revision 1, is not applicable to Model 767 series airplanes having a third locking system installed on the thrust reversers. For those airplanes, an additional step is necessary in order to unlock the electro-mechanical brake, prior to accomplishment of the functional test, as described in Appendix 1 (including Figure 1) of the existing AD. If the test is performed on airplanes with the third locking system installed, in accordance with the service bulletin, the system will always pass the test, even if the cone brake has failed. Paragraph (d) of the existing AD does not specifically list which airplanes are required to do the functional test of the cone brake of the CDU, in accordance with Boeing Service Bulletin 767–78A0081, Revision 1; and which are required to do the test in accordance with Appendix 1 (including Figure 1) of the AD. Therefore, paragraph (d) of this AD has been revised to separate the service information requirements for accurate accomplishment of the functional test.

In addition, the grace period of 650 flight hours to accomplish the functional test of the cone brake of the CDU is expected to expire for most airplanes by May or June 2000. For airplanes that have been modified to incorporate the third locking system, this would allow accomplishment of an invalid test with potentially misleading results. The valid functional test as described in Appendix 1 (including Figure 1) of this AD imposes no additional burden.

Explanation of Requirements of Rule

Since an unsafe condition has been identified that is likely to exist or develop on other airplanes of this same type design, this AD supersedes AD 2000–02–20 to continue to require tests, inspections, and adjustments of the thrust reverser system. The AD also continues to require installation of a terminating modification, and repetitive follow-on actions. In addition, this AD revises certain actions in the existing AD.

Determination of Rule's Effective Date

Since a situation exists that requires the immediate adoption of this regulation, it is found that notice and opportunity for prior public comment hereon are impracticable, and that good cause exists for making this amendment effective in less than 30 days.

Comments Invited

Although this action is in the form of a final rule that involves requirements affecting flight safety and, thus, was not preceded by notice and an opportunity for public comment, comments are invited on this rule. Interested persons are invited to comment on this rule by submitting such written data, views, or arguments as they may desire. Communications shall identify the Rules Docket number and be submitted in triplicate to the address specified under the caption **ADDRESSES.** All communications received on or before the closing date for comments will be considered, and this rule may be amended in light of the comments

received. Factual information that supports the commenter's ideas and suggestions is extremely helpful in evaluating the effectiveness of the AD action and determining whether additional rulemaking action would be needed.

Comments are specifically invited on the overall regulatory, economic, environmental, and energy aspects of the rule that might suggest a need to modify the rule. All comments submitted will be available, both before and after the closing date for comments, in the Rules Docket for examination by interested persons. A report that summarizes each FAA-public contact concerned with the substance of this AD will be filed in the Rules Docket.

Commenters wishing the FAA to acknowledge receipt of their comments submitted in response to this rule must submit a self-addressed, stamped postcard on which the following statement is made: ''Comments to Docket Number 2000–NM–94–AD.'' The postcard will be date stamped and returned to the commenter.

Regulatory Impact

The regulations adopted herein will not have a substantial direct effect on the States, on the relationship between the national Government and the States, or on the distribution of power and responsibilities among the various levels of government. Therefore, it is determined that this final rule does not have federalism implications under Executive Order 13132.

The FAA has determined that this regulation is an emergency regulation that must be issued immediately to correct an unsafe condition in aircraft, and that it is not a ''significant regulatory action'' under Executive Order 12866. It has been determined further that this action involves an emergency regulation under DOT Regulatory Policies and Procedures (44 FR 11034, February 26, 1979). If it is determined that this emergency regulation otherwise would be significant under DOT Regulatory Policies and Procedures, a final regulatory evaluation will be prepared and placed in the Rules Docket. A copy of it, if filed, may be obtained from the Rules Docket at the location provided under the caption **ADDRESSES**.

List of Subjects in 14 CFR Part 39

Air transportation, Aircraft, Aviation safety, Incorporation by reference, Safety.

Adoption of the Amendment

Accordingly, pursuant to the authority delegated to me by the Administrator, the Federal Aviation Administration amends part 39 of the Federal Aviation Regulations (14 CFR part 39) as follows:

PART 39—AIRWORTHINESS DIRECTIVES

1. The authority citation for part 39 continues to read as follows:

Authority: 49 U.S.C. 106(g), 40113, 44701.

§ 39.13 [Amended]

2. Section § 39.13 is amended by removing amendment 39–11538 (65 FR 5229, February 3, 2000), and by adding a new airworthiness directive (AD), amendment 39–11712, to read as follows:

2000–09–04 Boeing: Amendment 39–11712. Docket 2000–NM–94–AD. Supersedes AD 2000–02–20, Amendment 39–11538.

Applicability: Model 767 series airplanes equipped with General Electric Model CF6–80C2 series engines, certificated in any category.

Note 1: This AD applies to each airplane identified in the preceding applicability provision, regardless of whether it has been modified, altered, or repaired in the area subject to the requirements of this AD. For airplanes that have been modified, altered, or repaired so that the performance of the requirements of this AD is affected, the owner/operator must request approval for an alternative method of compliance in accordance with paragraph (i)(1) of this AD. The request should include an assessment of the effect of the modification, alteration, or repair on the unsafe condition addressed by this AD; and, if the unsafe condition has not been eliminated, the request should include specific proposed actions to address it.

Compliance: Required as indicated, unless accomplished previously.

To ensure the integrity of the fail safe features of the thrust reverser system by preventing possible failure modes in the thrust reverser control system that can result in inadvertent deployment of a thrust reverser during flight, accomplish the following:

Repetitive Tests, Inspections, and Adjustments

(a) Within 30 days after August 18, 1995 (the effective date of AD 95–13–12 R1, amendment 39–9528), perform tests, inspections, and adjustments of the thrust reverser system in accordance with Boeing Service Bulletin 767–78–0047, Revision 3, dated July 28, 1994.

(1) Except as provided by paragraph (a)(2) of this AD, repeat all tests and inspections thereafter at intervals not to exceed 3,000 flight hours until the modification required by paragraph (c) of this AD is accomplished.

(2) Repeat the check of the grounding wire for the Directional Pilot Valve (DPV) of the thrust reverser in accordance with the service bulletin at intervals not to exceed 1,500 flight hours, and whenever maintenance action is taken that would disturb the DPV grounding circuit, until the modification required by paragraph (c) of this AD is accomplished.

Repair

(b) If any of the tests and/or inspections required by paragraph (a) of this AD cannot be successfully performed, or if those tests and/or inspections result in findings that are unacceptable in accordance with Boeing Service Bulletin 767–78–0047, Revision 3, dated July 28, 1994; accomplish paragraphs (b)(1) and (b)(2) of this AD.

(1) Prior to further flight, deactivate the associated thrust reverser in accordance with Section 78–31–1 of Boeing Document D630T002, ''Boeing 767 Dispatch Deviation Guide,'' Revision 9, dated May 1, 1991; or Revision 10, dated September 1, 1992. After August 18, 1995, this action shall be accomplished only in accordance with Revision 10 of the Boeing document. No more than one reverser on any airplane may be deactivated under the provisions of this paragraph.

(2) Within 10 days after deactivation of any thrust reverser in accordance with this paragraph, the thrust reverser must be repaired in accordance with Boeing Service Bulletin 767–78–0047, Revision 3, dated July 28, 1994. Additionally, the tests and/or inspections required by paragraph (a) of this AD must be successfully accomplished; once this is accomplished, the thrust reverser must then be reactivated.

Modification

(c) For airplanes having line numbers 1 through 474 inclusive: Within 3 years after August 18, 1995, install a third locking system on the left- and right-hand engine thrust reversers in accordance with Boeing Service Bulletin 767–78–0063, Revision 2, dated April 28, 1994.

Note 2: Model 767 series airplanes equipped with General Electric Model CF6–80C2 series engines and having line numbers 475 and subsequent, on which Production Revision Record (PRR) B11481–70 (which installs a third locking system on the left- and right-hand engine thrust reversers) has been incorporated, need NOT be modified in accordance with Boeing Service Bulletin 767–78–0063, Revision 2.

Note 3: Boeing Service Bulletin 767–78–0063, references General Electric (GE) Service Bulletin 78–135 as an additional source of service information for accomplishment of the third locking system on the thrust reversers. However, the Boeing service bulletin does not specify the appropriate revision level, and the GE service bulletin has a new Lockheed Martin title for the same service bulletin: Lockheed Martin Service Bulletin 78–135, Revision 4, dated September 30, 1996. The appropriate revision level for the GE Service Bulletin is Revision 3, dated August 2, 1994. The GE and Lockheed Martin service bulletins are identical, and either may be used for accomplishment of the action described previously.

Note 4: The actions specified in Lockheed Martin Service Bulletin 78–1007, Revision 1, dated March 18, 1997; and Lockheed Martin Service Bulletin 78–1020, Revision 2, dated March 20, 1997; may be accomplished

simultaneously in conjunction with Boeing Service Bulletin 767–78–0063 for accomplishment of the installation of the thrust reverser bracket and the thrust reverser lock. (Accomplishment of these two service bulletins together achieves the same results as Lockheed Martin Service Bulletin 78–135, Revision 4, and is acceptable for compliance with Boeing Service Bulletin 767–78–0063.)

Repetitive Tests and Checks

(d) Perform a functional test to detect discrepancies of the cone brake of the center drive unit (CDU) on each thrust reverser, as specified in paragraph (d)(1) or (d)(2) of this AD, as applicable.

(1) For airplanes on which the modification required by paragraph (c) of this AD or a production equivalent has NOT been accomplished: Within 650 flight hours after the effective date of this AD, perform the test in accordance with Boeing Service Bulletin 767–78A0081, Revision 1, dated October 9, 1997.

(2) For airplanes on which the modification required by paragraph (c) of this AD or a production equivalent has been accomplished: Perform the test in accordance with Appendix 1 (including Figure 1), sections 1.A.(2), 2.A., 2.C., and 2.D; of this AD. Accomplish the test at the time specified in paragraph (d)(2)(i) or (d)(2)(ii) of this AD, as applicable.

(i) For airplanes on which the test required by paragraph (d) of AD 95–13–12 R1 HAS been accomplished prior to the effective date of this AD: Accomplish the functional test within 1,000 flight hours after the most recent test of the CDU cone brake performed in accordance with paragraph (d) of AD 95–13–12 R1, or within 650 flight hours after the effective date of this AD, whichever occurs later.

(ii) For airplanes on which the test required by paragraph (d) of AD 95–13–12 R1 has NOT been accomplished prior to the effective date of this AD: Accomplish the functional test within 1,000 flight hours since the date of manufacture, or within 650 flight hours after the effective date of this AD, whichever occurs later.

(e) Repeat the functional test of the CDU cone brake specified in paragraph (d) of this AD at the time specified in paragraph (e)(1) or (e)(2) of this AD, as applicable.

(1) For Model 767 series airplanes, line numbers up to and including 474, equipped with thrust reversers that have not been modified in accordance with Boeing Service Bulletin 767–78–0063: Repeat the functional test of the CDU cone brake thereafter at intervals not to exceed 650 flight hours.

(2) For Model 767 series airplanes, line numbers 475 and subsequent; and Model 767 series airplanes equipped with thrust reversers that have been modified in accordance with Boeing Service Bulletin 767–78–0063, or a production equivalent: Repeat the functional test of the CDU cone brake thereafter at intervals not to exceed 1,000 flight hours.

(f) Within 1,000 flight hours after accomplishing the modification required by paragraph (c) of this AD or after the equivalent modification (Production Revision Record B11481–70) is incorporated in production, or within 1,000 flight hours after March 9, 2000, whichever occurs later: Perform operational checks of the electro-mechanical brake in accordance with Appendix 1 (including Figure 1); sections 1.A.(1), 2.A., 2.B., and 2.D; of this AD. Repeat the operational checks thereafter at intervals not to exceed 1,000 flight hours.

Repair

(g) If any functional test or operational check required by paragraph (d), (e), or (f) of this AD cannot be successfully performed, prior to further flight, repair in accordance with Boeing Service Bulletin 767–78A0081, Revision 1, dated October 9, 1997; or Appendix 1, section 2.B. and 2.C., of this AD; as applicable; and repeat the applicable test or check until successfully accomplished.

Terminating Action

(h) Accomplishment of the modification required by paragraph (c) or installation of an equivalent modification (Production Revision Record B11481–70) in production, and accomplishment of the periodic functional tests and operational checks required by paragraphs (d), (e), and (f) of this AD, constitutes terminating action for the tests, inspections, and adjustments required by paragraph (a) of this AD.

Alternative Methods of Compliance

(i)(1) An alternative method of compliance or adjustment of the compliance time that provides an acceptable level of safety may be used if approved by the Manager, Seattle Aircraft Certification Office (ACO), FAA, Transport Airplane Directorate. Operators shall submit their requests through an appropriate FAA Principal Maintenance Inspector, who may add comments and then send it to the Manager, Seattle ACO.

(2) Alternative methods of compliance, approved previously in accordance with AD 95–13–12, amendment 39–9292, are approved as alternative methods of compliance with this AD.

Note 5: Information concerning the existence of approved alternative methods of compliance with this AD, if any, may be obtained from the Seattle ACO.

Special Flight Permits

(j) Special flight permits may be issued in accordance with sections 21.197 and 21.199 of the Federal Aviation Regulations (14 CFR 21.197 and 21.199) to operate the airplane to a location where the requirements of this AD can be accomplished.

Incorporation by Reference

(k) Except as provided by paragraphs (b)(1), (d)(2), and (f) of this AD, the actions shall be done in accordance with Boeing Service Bulletin 767–78–0047, Revision 3, dated July 28, 1994; Boeing Service Bulletin 767–78–0063, Revision 2, dated April 28, 1994; and Boeing Service Bulletin 767–78A0081, Revision 1, dated October 9, 1997; as applicable.

(1) The incorporation by reference of Boeing Service Bulletin 767–78A0081, Revision 1, dated October 9, 1997, was previously approved by the Director of the Federal Register, as of March 9, 2000 (65 FR 5229, February 3, 2000).

(2) The incorporation by reference of Boeing Service Bulletin 767–78–0047, Revision 3, dated July 28, 1994; and Boeing Service Bulletin 767–78–0063, Revision 2, dated April 28, 1994; was previously approved by the Director of the Federal Register, as of August 18, 1995 (60 FR 36976, July 19, 1995).

(3) Copies may be obtained from Boeing Commercial Airplane Group, P.O. Box 3707, Seattle, Washington 98124–2207. Copies may be inspected at the FAA, Transport Airplane Directorate, 1601 Lind Avenue, SW., Renton, Washington; or at the Office of the Federal Register, 800 North Capitol Street, NW., suite 700, Washington, DC.

(l) This amendment becomes effective on May 19, 2000.

Appendix 1.—Thrust Reverser Electro-Mechanical Brake and CDU Cone Brake Test

1. General

A. This procedure contains steps to do two checks:

(1) A check of the holding torque of the electro-mechanical brake.

(2) A check of the holding torque of the CDU cone brake.

2. Electro-Mechanical Brake and CDU Cone Brake Torque Check (Fig. 1)

A. Prepare to do the checks:

(1) Open the fan cowl panels.

B. Do a check of the torque of the electro-mechanical brake:

(1) Do a check of the running torque of the thrust reverser system:

(a) Manually extend the thrust reverser six inches and measure the running torque.

(1) Make sure the torque is less than 10 pound-inches.

(2) Do a check of the electro-mechanical brake holding torque:

(a) Make sure the thrust reverser translating cowl is extended at least one inch.

(b) Make sure the CDU lock handle is released.

(c) Pull down on the manual release handle on the electro-mechanical brake until the handle fully engages the retaining clip.

Note: This will lock the electro-mechanical brake.

(d) With the manual drive lockout cover removed from the CDU, install a ¼-inch extension tool and dial-type torque wrench into the drive pad.

Note: You will need a 24-inch extension to provide adequate clearance for the torque wrench.

(e) Apply 90 pound-inches of torque to the system.

(1) The electro-mechanical brake system is working correctly if the torque is reached before you turn the wrench 450 degrees (1¼ turns).

(2) If the flexshaft turns more than 450 degrees before you reach the specified torque, you must replace the long flexshaft between the CDU and the upper angle gearbox.

(3) If you do not get 90 pound-inches of torque, you must replace the electro-mechanical brake.

(f) Release the torque by turning the wrench in the opposite direction until you read zero pound-inches.

(1) If the wrench does not return to within 30 degrees of initial starting point, you must

replace the long flexshaft between the CDU and upper angle gearbox.

(3) Fully retract the thrust reverser.

C. Do a check of the CDU cone brake:

(1) Pull up on the manual release handle to unlock the electro-mechanical brake.

(2) Pull the manual brake release lever on the CDU to release the cone brake.

Note: This will release the pre-load tension that may occur during a stow cycle.

(3) Return the manual brake release lever to the locked position to engage the cone brake.

(4) Remove the two bolts that hold the lockout plate to the CDU and remove the lockout plate.

(5) Install a ¼-inch drive and a dial type torque wrench into the CDU drive pad.

CAUTION: DO NOT USE MORE THAN 100 POUND-INCHES OF TORQUE WHEN YOU DO THIS CHECK. EXCESSIVE TORQUE WILL DAMAGE THE CDU.

(6) Turn the torque wrench to try to manually extend the translating cowl until you get at lease 15-pound inches.

Note: The cone brake prevents movement in the extend direction only. If you try to measure the holding torque in the retract direction, you will get a false reading.

(a) If the torque is less than 15-pound-inches, you must replace the CDU.

D. Return the airplane to its usual condition:

(1) Fully retract the thrust reverser (unless already accomplished).

(2) Pull down on the manual release handle on the electro-mechanical brake until the handle fully engages the retaining clip (unless already accomplished).

Note: This will lock the electro-mechanical brake.

(3) Close the fan cowl panels.

To ensure the integrity of the fail-safe features of the thrust reverser system

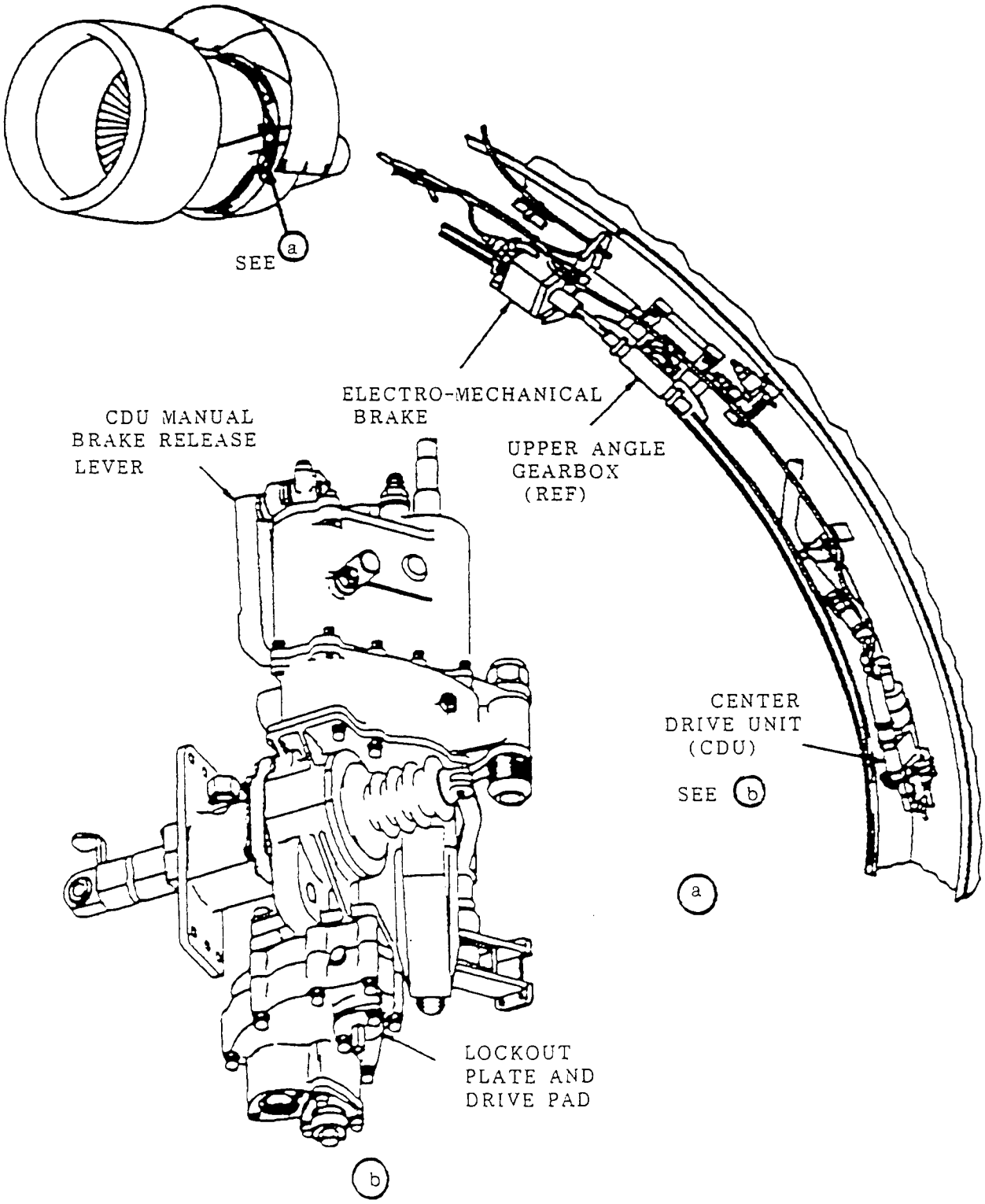

Electro-Mechanical Brake and CDU Cone Brake Torque Check
Figure 1

Issued in Renton, Washington, on April 26, 2000.

Donald L. Riggin,

Acting Manager, Transport Airplane Directorate, Aircraft Certification Service.

[FR Doc. 00–11061 Filed 5–3–00; 8:45 am]

BILLING CODE 4910–13–P

DEPARTMENT OF TRANSPORTATION

Federal Aviation Administration

14 CFR Part 97

[Docket No. 30017; Amdt. No. 1990]

Standard Instrument Approach Procedures; Miscellaneous Amendments

AGENCY: Federal Aviation Administration (FAA), DOT.

ACTION: Final rule.

SUMMARY: This amendment establishes, amends, suspends, or revokes Standard Instrument Approach Procedures (SIAPs) for operations at certain airports. These regulatory actions are needed because of changes occurring in the National Airspace System, such as the commissioning of new navigational facilities, addition of new obstacles, or changes in air traffic requirements. These changes are designed to provide safe and efficient use of the navigable airspace and to promote safe flight operations under instrument flight rules at the affected airports.

DATES: An effective date for each SIAP is specified in the amendatory provisions.

Incorporation by reference-approved by the Director of the Federal Register on December 31, 1980, and reapproved as of January 1, 1982.

ADDRESSES: Availability of matter incorporated by reference in the amendment is as follows:

For Examination—

1. FAA Rules Docket, FAA Headquarters Building, 800 Independence Avenue, SW., Washington, DC 20591;
2. The FAA Regional Office of the region in which affected airport is located; or
3. The Flight Inspection Area Office which originated the SIAP.

For Purchase—Individual SIAP copies may be obtained from:

1. FAA Public Inquiry Center (APA–200), FAA Headquarters Building, 800 Independence Avenue, SW., Washington, DC 20591; or
2. The FAA Regional Office of the region in which the affected airport is located.

By Subscription—Copies of all SIAPs, mailed once every 2 weeks, are for sale by the Superintendent of Documents, US Government Printing Office, Washington, DC 20402.

FOR FURTHER INFORMATION CONTACT: David P. Pate, Flight Procedure Standards Branch (AMCAFS–420), Flight Technologies and Programs Division, Flight Standards Service, Federal Aviation Administration, Mike Monroney Aeronautical Center, 6500 South MacArthur Blvd. Oklahoma City, OK 73169 (Mail Address: P.O. Box 25082 Oklahoma City, OK 73125) telephone: (405) 954–4164.

SUPPLEMENTARY INFORMATION: This amendment to part 97 of the Federal Aviation Regulations (14 CFR part 97) establishes, amends, suspends, or revokes Standard Instrument Approach Procedures (SIAPs). The complete regulatory description on each SIAP is contained in the appropriate FAA Form 8260 and the National Flight Data Center (FDC)/Permanent (P) Notices to Airmen (NOTAM) which are incorporated by reference in the amendment under 5 U.S.C. 552(a), 1 CFR part 51, and § 97.20 of the Federal Aviation's Regulations (FAR). Materials incorporated by reference are available for examination or purchase as stated above.

The large number of SIAPs, their complex nature, and the need for a special format make their verbatim publication in the **Federal Register** expensive and impractical. Further, airmen do not use the regulatory text of the SIAPs, but refer to their graphic depiction of charts printed by publishers of aeronautical materials. Thus, the advantages of incorporation by reference are realized and publication of the complete description of each SIAP contained in FAA form documents is unnecessary. The provisions of this amendment state the affected CFR (and FAR) sections, with the types and effective dates of the SIAPs. This amendment also identifies the airport, its location, the procedure identification and the amendment number.

The Rule

This amendment to part 97 of the Federal Aviation Regulations (14 CFR part 97) establishes, amends, suspends, or revokes SIAPs. For safety and timeliness of change considerations, this amendment incorporates only specific changes contained in the content of the following FDC/P NOTAMs for each SIAP. The SIAP information in some previously designated FDC/Temporary (FDC/T) NOTAMs is of such duration as to be permanent. With conversion to FDC/P NOTAMs, the respective FDC/T NOTAMs have been canceled.

The FDC/P NOTAMs for the SIAPs contained in this amendment are based on the criteria contained in the U.S. Standard for Terminal Instrument Procedures (TERPS). In developing these chart changes to SIAPs by FDC/P NOTAMs, the TERPS criteria were applied to only these specific conditions existing at the affected airports. All SIAP amendments in this rule have been previously issued by the FAA in a National Flight Data Center (FDC) Notice to Airmen (NOTAM) as an emergency action of immediate flight safety relating directly to published aeronautical charts. The circumstances which created the need for all these SIAP amendments requires making them effective in less than 30 days.

Further, the SIAPs contained in this amendment are based on the criteria contained in the TERPS. Because of the close and immediate relationship between these SIAPs and safety in air commerce, I find that notice and public procedure before adopting these SIAPs are impracticable and contrary to the public interest and, where applicable, that good cause exists for making these SIAPs effective in less than 30 days.

Conclusion

The FAA has determined that this regulation only involves an established body of technical regulations for which frequent and routine amendments are necessary to keep them operationally current. It, therefore—(1) is not a ''significant regulatory action'' under Executive Order 12866; (2) is not a ''significant rule'' under DOT Regulatory Policies and Procedures (44 FR 11034; February 26, 1979); and (3) does not warrant preparation of a regulatory evaluation as the anticipated impact is so minimal. For the same reason, the FAA certifies that this amendment will not have a significant economic impact on a substantial number of small entities under the criteria of the Regulatory Flexibility Act.

List of Subjects in 14 CFR Part 97

Air Traffic Control, Airports, Navigation (Air).

Issued in Washington, DC on April 28, 2000.

L. Nicholas Lacey,

Director, Flight Standards Service.

Adoption of the Amendment

Accordingly, pursuant to the authority delegated to me, part 97 of the Federal Aviation Regulations (14 CFR part 97) is amended by establishing,

amending, suspending, or revoking Standard Instrument Approach Procedures, effective at 0901 UTC on the dates specified, as follows:

PART 97—STANDARD INSTRUMENT APPROACH PROCEDURES

1. The authority citation for part 97 is revised to read as follows:

Authority: 49 U.S.C. 40103, 40113, 40120, 44701; 49 U.S.C. 106(g); and 14 CFR 11.49(b)(2).

2. Part 97 is amended to read as follows:

§§ 97.23, 97.25, 97.27, 97.29, 97.31, 97.33, 97.35 [Amended]

By amending: § 97.23 VOR, VOR/DME, VOR or TACAN, and VOR/DME or TACAN; 97.25 LOC, LOC/DME, LDA, LDA/DME, SDF, SDF/DME; § 97.27 NDB, NDB/DME; 97.29 ILS, ILS/DME, ISMLS, MLS, MLS/DME, MLS/RNAV; § 97.31 RADAR SIAPs; § 97.33 RNAV SIAPs; and § 97.35 COPTER SIAPs, identified as follows:

Effective Upon Publication

FDC Date	State	City	Airport	FDC number	SIAP
03/13/00	CA	Merced	Merced Muni-Macready Field	FDC 0/2479	VOR Rwy 30 Amdt 18A...
03/24/00	CA	Santa Maria	Santa Maria Public/Captain G. Allan Hancock Field.	FDC 0/4168	VOR OR GPS Rwy 12 AMDT 12...
04/11/00	FL	West Palm Beach	Palm Beach Intl	FDC 0/3543	ILS Rwy 27R, ORIG...
04/11/00	WA	Arlington	Arlington Muni	FDC 0/3539	LOC Rwy 34 Amdt 4...
04/11/00	WA	Kelso	Kelso-Longview	FDC 0/3540	NDB OR GPS–A, Amdt 5B...
04/11/00	WA	Richland	Richland	FDC 0/3538	VOR OR GPS Rwy 25, Amdt 6...
04/11/00	WA	Spokane	Spokane International	FDC 0/3535	NDB Rwy 21, Amdt 14B...
04/11/00	WA	Spokane	Spokane International	FDC 0/3537	ILS Rwy 21 Amdt 19...
04/12/00	KS	Dodge City	Dodge City Regional	FDC 0/3597	GPS Rwy 14, ORIG...
04/13/00	CA	Fresno	Fresno Yosemite Intl	FDC 0/3652	HI–ILS/DME 2 Rwy 29R, Amdt 5...
04/13/00	CA	Ontario	Ontario Intl	FDC 0/3648	ILS Rwy 26R Amdt 2...
04/13/00	CA	Ontario	Ontario Intl	FDC 0/3650	ILS Rwy 26L (CAT I, II, III), Amdt 7...
04/13/00	CA	Ontario	Ontario Intl	FDC 0/3651	ILS Rwy 8L, Amdt 7...
04/13/00	VT	Burlington	Burlington Intl	FDC 0/3663	ILS Rwy 15, Amdt 21C...
04/14/00	TX	Lubbock	Lubbock Intl	FDC 0/3711	VOR/DME OR TA–CAN Rwy 26, Amdt 10A...
04/17/00	FL	Orlando	Orlando Intl	FDC 0/3795	ILS Rwy 17 (CAT I, CAT II), Amdt 2...
04/17/00	FL	Orlando	Orlando Intl	FDC 0/3796	ILS Rwy 35 (CAT I, CAT II, CAT III), Amdt 3...
04/17/00	MO	Kansas City	Kansas City Downtown	FDC 0/3799	ILS Rwy 19 Amdt 20D...
04/18/00	SC	Walterboro	Lowcountry Regional	FDC 0/3821	GPS Rwy 5 ORIG...
04/18/00	VT	Burlington	Burlington Intl	FDC 0/3839	NDB OR GPS Rwy 15 Amdt 19B...
04/18/00	WA	Spokane	Spokane International	FDC 0/3823	VOR/DME RNAV OR GPS Rwy 21, ORIG...
04/19/00	FL	Fort Lauderdale	Fort Lauderdale-Hollywood Intl	FDC 0/3882	RADAR–1, Amdt 4...
04/19/00	TN	Knoxville	McGhee-Tyson	FDC 0/3877	VOR OR GPS Rwy 23L, Amdt 4...
04/19/00	TN	Knoxville	McGhee-Tyson	FDC 0/3878	VOR OR GPS Rwy 23R, Amdt 6...
04/19/00	TX	Lockhart	Lockhart Muni	FDC 0/3873	GPS Rwy 36, ORIG–A...
04/20/00	FL	Apalachicola	Apalachicola Muni	FDC 0/4012	RNAV Rwy 13, ORIG...
04/20/00	FL	Apalachicola	Apalachicola Muni	FDC 0/4013	RNAV Rwy 31, ORIG...
04/20/00	FL	Lake City	Lake City Muni	FDC 0/4027	RNAV Rwy 10, ORIG...
04/20/00	FL	Lake City	Lake City Muni	FDC 0/4028	RNAV Rwy 28, ORIG...
04/20/00	FL	Orlando	Orlando Sanford	FDC 0/4014	RNAV Rwy 9L, ORIG...
04/20/00	FL	Orlando	Orlando Sanford	FDC 0/4015	RNAV Rwy 27R, ORIG...
04/20/00	IA	Dubuque	Dubuque Regional	FDC 0/3921	LOC/DME BC Rwy 13, Amdt 5...

FDC Date	State	City	Airport	FDC number	SIAP
04/20/00	IA	Fort Dodge	Fort Dodge Regional	FDC 0/3915	VOR/DME OR GPS Rwy 30, Amdt 9B...
04/20/00	IA	Ottumwa	Ottumwa Industrial	FDC 0/3914	VOR/DME OR GPS Rwy 13, Amdt 6B...
04/20/00	IL	Belleville	Scott AFB/MidAmerica	FDC 0/3948	RNAV Rwy 14R, ORIG...
04/20/00	IL	Belleville	Scott AFB/MidAmerica	FDC 0/3949	RNAV Rwy 32L, ORIG...
04/20/00	IL	Chicago/Aurora	Aurora Muni	FDC 0/3946	VOR–A, Amdt 2...
04/20/00	IL	Lawrenceville	Lawrenceville-Vincennes Intl	FDC 0/3989	RNAV Rwy 36, ORIG...
04/20/00	IL	Lawrenceville	Lawrenceville-Vincennes Intl	FDC 0/3991	RNAV Rwy 27, ORIG...
04/20/00	IL	Lawrenceville	Lawrenceville-Vincennes Intl	FDC 0/3992	RNAV Rwy 18, ORIG...
04/20/00	IL	Lawrenceville	Lawrenceville-Vincennes Intl	FDC 0/3993	RNAV Rwy 9, ORIG...
04/20/00	KS	Gardner	Gardner Muni	FDC 0/3917	NDB OR GPS–D, Amdt 2...
04/20/00	KS	Hutchinson	Hutchinson Muni	FDC 0/3922	LOC BC Rwy 31, Amdt 14A...
04/20/00	KS	Olathe	Johnson County Executive	FDC 0/3916	NDB OR GPS–B, Amdt 2B...
04/20/00	KS	Olathe	New Century Aircenter	FDC 0/3964	RNAV Rwy 17, ORIG...
04/20/00	KS	Olathe	New Century Aircenter	FDC 0/3965	RNAV Rwy 35, ORIG...
04/20/00	MD	Salisbury	Salisbury-Ocean City Wicomico Regional.	FDC 0/3955	RNAV Rwy 32, ORIG...
04/20/00	MD	Salisbury	Salisbury-Ocean City Wicomico Regional.	FDC 0/3956	RNAV Rwy 14, ORIG...
04/20/00	MD	Salisbury	Salisbury-Ocean City Wicomico Regional.	FDC 0/3957	RNAV Rwy 5, ORIG...
04/20/00	MD	Salisbury	Salisbury-Ocean City Wicomico Regional.	FDC 0/3958	RNAV Rwy 23, ORIG...
04/20/00	MN	Bemidji	Bemidji-Beltrami County	FDC 0/3988	RNAV Rwy 31, ORIG...
04/20/00	MO	Fredericktown	Fredericktown Regional	FDC 0/4021	RNAV Rwy 19, ORIG...
04/20/00	MO	Fredericktown	Fredericktown Regional	FDC 0/4024	VOR Rwy 19, Amdt 1...
04/20/00	NC	Gastonia	Gastonia Muni	FDC 0/3982	RNAV Rwy 3, ORIG...
04/20/00	NC	Kinston	Kinston Regional Jetport at Stallings Field.	FDC 0/3981	RNAV Rwy 5, ORIG...
04/20/00	NE	Crete	Crete Muni	FDC 0/4020	VOR/DME OR GPS Rwy 17, Amdt 3...
04/20/00	NJ	Atlantic City	Atlantic City Intl	FDC 0/3944	RNAV Rwy 13, ORIG–A...
04/20/00	PA	Butler	Butler County/K.W. Scholter Field.	FDC 0/3959	GPS Rwy 8, ORIG...
04/20/00	PA	Monongahela	Rostraver	FDC 0/3970	VOR OR GPS–A Amdt 4B...
04/20/00	PA	Pittsburgh	Allegheny County	FDC 0/3941	RNAV Rwy 5 ORIG...
04/20/00	PA	Pittsburgh	Allegheny County	FDC 0/3943	RNAV Rwy 28 ORIG...
04/20/00	PA	Pittsburgh	Allegheny County	FDC 0/4004	RNAV Rwy 10 ORIG...
04/20/00	PA	Pittsburgh	Pittsburgh Intl	FDC 0/3934	RNAV Rwy 10R ORIG...
04/20/00	PA	Pittsburgh	Pittsburgh Intl	FDC 0/3935	RNAV Rwy 10C ORIG...
04/20/00	PA	Pittsburgh	Pittsburgh Intl	FDC 0/3936	RNAV Rwy 28L ORIG...
04/20/00	PA	Pittsburgh	Pittsburgh Intl	FDC 0/3937	RNAV Rwy 28R ORIG...
04/20/00	PA	Pittsburgh	Pittsburgh Intl	FDC 0/3938	RNAV Rwy 28C ORIG...
04/20/00	PA	Pittsburgh	Pittsburgh Intl	FDC 0/3939	ILS Rwy 28L Amdt 7...
04/20/00	PA	Pittsburgh	Pittsburgh Intl	FDC 0/3940	ILS Rwy 10R Amdt 9...
04/20/00	PA	Pittsburgh	Pittsburgh Intl	FDC 0/3975	RNAV Rwy 32 ORIG...
04/20/00	PA	Pittsburgh	Pittsburgh Intl	FDC 0/3976	RNAV Rwy 14 ORIG...

FDC Date	State	City	Airport	FDC number	SIAP
04/20/00	PA	Pittsburgh	Pittsburgh Intl	FDC 0/3977	RNAV Rwy 10L ORIG...
04/20/00	PA	Washington	Washington County	FDC 0/3945	VOR OR GPS–B Amdt 6B...
04/20/00	VA	Charlottesville	Charlottesville-Albemarle	FDC 0/3953	RNAV Rwy 3 ORIG–A...
04/20/00	WV	Morgantown	Morgantown Muni-Walter L. Bill Hart Field.	FDC 0/3968	RNAV Rwy 18 ORIG–A...
04/21/00	AR	Monticello	Monticello Muni/Ellis Field	FDC 0/4116	VOR–A, Amdt 5A...
04/21/00	AR	Morrilton	Petit Jean Park	FDC 0/4117	GPS Rwy 2, ORIG...
04/21/00	AZ	Fort Huachuca-Sierra Vista	Sierra Vista Muni-Libby AAF	FDC 0/4035	NDB Rwy 26 Amdt 3...
04/21/00	AZ	Fort Huachuca-Sierra Vista	Sierra Vista Muni-Libby AAF	FDC 0/4036	VOR Rwy 26 Amdt 3...
04/21/00	AZ	Fort Huachuca-Sierra Vista	Sierra Vista Muni-Libby AAF	FDC 0/4037	ILS Rwy 26 Amdt 2...
04/21/00	AZ	Fort Huachuca-Sierra Vista	Sierra Vista Muni-Libby AAF	FDC 0/4038	GPS Rwy 26 ORIG...
04/21/00	AZ	Fort Huachuca-Sierra Vista	Sierra Vista Muni-Libby AAF	FDC 0/4040	GPS Rwy 8 ORIG–A...
04/21/00	CA	Palo Alto	Palo Alto Airport of Santa Clara County.	FDC 0/4098	VOR/DME 30 ORIG...
04/21/00	CA	Palo Alto	Palo Alto Airport of Santa Clara County.	FDC 0/4099	GPS Rwy 30 Amdt 1A...
04/21/00	FL	Jacksonville	Herlong	FDC 0/4072	NDB–A, ORIG...
04/21/00	FL	Jacksonville	Jacksonville Intl	FDC 0/4073	ILS Rwy 25, ORIG–B...
04/21/00	FL	Jacksonville	Jacksonville Intl	FDC 0/4074	HI–ILS Rwy 7, Amdt 3...
04/21/00	FL	Jacksonville	Jacksonville Intl	FDC 0/4075	ILS Rwy 7 (CAT I, II, III), Amdt 12B...
04/21/00	FL	Jacksonville	Jacksonville Intl	FDC 0/4076	NDB OR GPS Rwy 7, Amdt 9B...
04/21/00	FL	Melbourne	Melbourne Intl	FDC 0/4078	GPS Rwy 9L ORIG–C...
04/21/00	FL	Orlando	Executive	FDC 0/4070	VOR/DME Rwy 7 ORIG–A...
04/21/00	FL	Orlando	Executive	FDC 0/4071	NDB Rwy 7 Amdt 15A...
04/21/00	LA	New Orleans	New Orleans Intl (Moisant Field).	FDC 0/4049	GPS Rwy 28, ORIG–A...
04/21/00	MI	Coldwater	Branch County Memorial	FDC 0/4105	RNAY Rwy 6 ORIG...
04/21/00	MO	Fredericktown	Fredericktown Regional	FDC 0/4054	RNAV Rwy 1, ORIG...
04/21/00	MO	Fredericktown	Fredericktown Regional	FDC 0/4056	VOR/DME Rwy 1, Amdt 3...
04/21/00	ND	Bismarck	Bismarck Muni	FDC 0/4103	RNAV Rwy 3, ORIG...
04/21/00	ND	Bismarck	Bismarck Muni	FDC 0/4104	RNAV Rwy 21, ORIG...
04/21/00	NY	Sidney	Sidney Muni	FDC 0/4081	RNAV Rwy 25, ORIG...
04/21/00	OR	Pendleton	Eastern Oregon Regional at Pendleton.	FDC 0/4127	VOR OR GPS Rwy 7, Amdt 14A...
04/21/00	OR	Salem	McNary Field	FDC 0/4124	NDB OR GPS Rwy 31, Amdt 18B...
04/21/00	UT	Salt Lake City Intl	Salt Lake City	FDC 0/4112	ILS Rwy 17, Amdt 10A...
04/21/00	UT	Salt Lake City Intl	Salt Lake City	FDC 0/4115	ILS Rwy 35, Amdt 1A ...
04/24/00	CA	Carlsbad	McClellan-Palomar	FDC 0/4160	ILS Rwy 24, Amdt 8A...
04/24/00	CA	Santa Maria	Santa Maria Public/Captain G. Allan Hancock Field.	FDC 0/4166	ILS Rwy 12, Amdt 9A...
04/24/00	CA	Santa Maria	Santa Maria Public/Captain G. Allan Hancock Field.	FDC 0/4167	LOC/DME BC–A Amdt 10A...
04/24/00	IL	Peru	Illinois Valley Regional-Walter A. Duncan Field.	FDC 0/4178	LOC Rwy 36, Amdt 2...
04/24/00	IN	Richmond	Richmond Muni	FDC 0/4180	ILS Rwy 24, ORIG–A...
04/24/00	MID	Sand Island	Henderson Field	FDC 0/4172	AY ATOLL, MQ. GPS Rwy 24 ORIG...
04/24/00	MID	Sand Island	Henderson Field	FDC 0/4198	AY ATOLL, MQ. GPS Rwy 06 ORIG...
04/24/00	MP	/Rota Island	Rota Intl	FDC 0/4171	GPS Rwy 27 ORIG...
04/25/00	CA	Burbank	Burbank-Glendale-Pasadena	FDC 0/4208	LOC Rwy 8, Amdt 2A...

FDC Date	State	City	Airport	FDC number	SIAP
04/25/00	CA	Burbank	Burbank-Glendale-Pasadena	FDC 0/4209	ILS Rwy 8, Amdt 35A...
04/25/00	CA	Burbank	Burbank-Glendale-Pasadena	FDC 0/4210	VOR OR GPS Rwy 8, Amdt 10A...
04/25/00	CA	Burbank	Burbank-Glendale-Pasadena	FDC 0/4211	NDB Rwy 8, Amdt 2A...
04/25/00	CA	Santa Ynez	Santa Ynez	FDC 0/4190	VOR OR GPS–B, Amdt 7C...
04/25/00	FL	Jacksonville	Jacksonville Intl	FDC 0/4192	NDB Rwy 31, ORIG–B...
04/25/00	OK	Clinton	Clinton-Sherman	FDC 0/4223	VOR Rwy 35L, Amdt 11A...
04/26/00	MA	Boston	General Edward Lawrence Logan Intl.	FDC 0/4245	RNAV Rwy 4R, ORIG–A...
04/26/00	MA	Mansfield	Mansfield Muni	FDC 0/4244	NDB Rwy 32, Amdt 6B...
04/26/00	OK	Ardmore	Ardmore Muni	FDC 0/4273	VOR–B, ORIG–A...
04/26/00	PA	Latrobe	Arnold Palmer Regional	FDC 0/4269	NDB Rwy 23, Amdt 13A...
04/26/00	PA	Latrobe	Arnold Palmer Regional	FDC 0/4297	ILS Rwy 23, Amdt 15A...
04/26/00	PA	Pittsburgh	Pittsburgh Intl	FDC 0/4256	CONVERGING ILS Rwy 32 Amdt 3...
04/26/00	TX	Houston	George Bush Intercontinental Airport/Houston.	FDC 0/4292	ILS Rwy 8, Amdt 18G...
04/26/00	TX	Houston	George Bush Intercontinental Airport/Houston.	FDC 0/4293	GPS Rwy 8, ORIG...
04/26/00	TX	McAllen	McAllen Miller Intl	FDC 0/4280	LOC BC Rwy 31, Amdt 9B...

[FR Doc. 00–11163 Filed 5–3–00; 8:45 am]

BILLING CODE 4910–13–M

DEPARTMENT OF TRANSPORTATION

Federal Aviation Administration

14 CFR Part 97

[Docket No. 30016; Amdt. No. 1989]

Standard Instrument Approach Procedures; Miscellaneous Amendments

AGENCY: Federal Aviation Administration (FAA), DOT.

ACTION: Final rule.

SUMMARY: This amendment establishes, amends, suspends, or revokes Standard Instrument Approach Procedures (SIAPs) for operations at certain airports. These regulatory actions are needed because of the adoption of new or revised criteria, or because of changes occurring in the National Airspace System, such as the commissioning of new navigational facilities, addition of new obstacles, or changes in air traffic requirements. These changes are designed to provide safe and efficient use of the navigable airspace and to promote safe flight operations under instrument flight rules at the affected airports.

DATES: An effective date for each SIAP is specified in the amendatory provisions.

Incorporation by reference-approved by the Director of the Federal Register on December 31, 1980, and reapproved as of January 1, 1982.

ADDRESSES: Availability of matters incorporated by reference in the amendment is as follows:

For Examination—

1. FAA Rules Docket, FAA Headquarters Building, 800 Independence Avenue, SW., Washington, DC 20591;

2. The FAA Regional Office of the region in which the affected airport is located; or

3. The Flight Inspection Area Office which originated the SIAP.

For Purchase—Individual SIAP copies may be obtained from:

1. FAA Public Inquiry Center (APA–200), FAA Headquarters Building, 800 Independence Avenue, SW., Washington, DC 20591; or

2. The FAA Regional Office of the region in which the affected airport is located.

By Subscription—Copies of all SIAPs, mailed once every 2 weeks, are for sale by the Superintendent of Documents, U.S. Government Printing Office, Washington, DC 20402.

FOR FURTHER INFORMATION CONTACT: Donald P. Pate, Flight Procedure Standards Branch (AMCAFS–420), Flight Technologies and Programs Division, Flight Standards Service, Federal Aviation Administration, Mike Monroney Aeronautical Center, 6500 South MacArthur Blvd. Oklahoma City, OK. 73169 (Mail Address: P.O. Box 25082 Oklahoma City, OK. 73125) telephone: (405) 954–4164.

SUPPLEMENTARY INFORMATION: This amendment to part 97 of the Federal Aviation Regulations (14 CFR part 97) establishes, amends, suspends, or revokes Standard Instrument Approach Procedures (SIAPs). The complete regulatory description of each SIAP is contained in official FAA form documents which are incorporated by reference in this amendment under 5 U.S.C. 552(a), 1 CFR part 51, and § 97.20 of the Federal Aviation Regulations (FAR). The applicable FAA Forms are identified as FAA Forms 8260–3, 8260–4, and 8260–5. Materials incorporated by reference are available for examination or purchase as stated above.

The large number of SIAPs, their complex nature, and the need for a special format make their verbatim publication in the **Federal Register** expensive and impractical. Further, airmen do not use the regulatory text of the SIAPs, but refer to their graphic depiction on charts printed by publishers of aeronautical materials. Thus, the advantages of incorporation by reference are realized and publication of the complete description of each SIAP contained in FAA form

documents is unnecessary. The provisions of this amendment state the affected CFR (and FAR) sections, with the types and effective dates of the SIAPs. This amendment also identifies the airport, its location, the procedure identification and the amendment number.

The Rule

This amendment to part 97 is effective upon publication of each separate SIAP as contained in the transmittal. Some SIAP amendments may have been previously issued by the FAA in a National Flight Data Center (NFDC) Notice to Airmen (NOTAM) as an emergency action of immediate flight safety relating directly to published aeronautical charts. The circumstances which created the need for some SIAP amendments may require making them effective in less than 30 days. For the remaining SIAPs, as effective date at least 30 days after publication is provided.

Further, the SIAPs contained in this amendment are based on the criteria contained in the U.S. Standard for Terminal Instrument Procedures (TERPS). In developing these SIAPs, the TERPS criteria were applied to the conditions existing or anticipated at the affected airports. Because of the close and immediate relationship between these SIAPs and safety in air commerce, I find that notice and public procedure before adopting these SIAPs are impracticable and contrary to the public interest and, where applicable, that good cause exists for making some SIAPs effective in less than 30 days.

Conclusion

The FAA has determined that this regulation only involves an established body of technical regulations for which frequent and routine amendments are necessary to keep them operationally current. It, therefore—(1) is not a ''significant regulatory action'' under Executive Order 12866; (2) is not a ''significant rule'' under DOT Regulatory Policies and Procedures (44 FR 11034; February 26, 1979); and (3) does not warrant preparation of a regulatory evaluation as the anticipated impact is so minimal. For the same reason, the FAA certifies that this amendment will not have a significant economic impact on a substantial number of small entities under the criteria of the Regulatory Flexibility Act.

List of Subjects in 14 CFR part 97

Air Traffic Control, Airports, Navigation (Air).

Issued in Washington, DC on April 28, 2000.

L. Nicholas Lacey,

Director, Flight Standards Service.

Adoption of the Amendment

Accordingly, pursuant to the authority delegated to me, part 97 of the Federal Aviation Regulations (14 CFR part 97) is amended by establishing, amending, suspending, or revoking Standard Instrument Approach Procedures, effective at 0901 UTC on the dates specified, as follows:

PART 97—STANDARD INSTRUMENT APPROACH PROCEDURES

1. The authority citation for part 97 is revised to read as follows:

Authority: 49 U.S.C. 106(g), 40103, 40113, 40120, 44701; and 14 CFR 11.49(b)(2).

2. Part 97 is amended to read as follows:

§§ 97.23, 97.25, 97.27, 97.29, 97.31, 97.33, 97.35 [Amended]

By amending: § 97.23 VOR, VOR/DME, VOR or TACAN, and VOR/DME or TACAN; § 97.25 LOC, LOC/DME, LDA, LDA/DME, SDF, SDF/DME; § 97.27 NDB, NDB/DME; § 97.29 ILS, ILS/DME, ISMLS, MLS, MLS/DME, MLS/RNAV; § 97.31 RADAR SIAPs; § 97.33 RNAV SIAPs; and § 97.35 COPTER SIAPs, identified as follows:

. . . Effective May 18, 2000

Louisburg, NC, Franklin County, ILS RWY 4, Orig

. . . Effective June 15, 2000

Chicago/Lake in the Hills, IL, Lake In The Hills, RNAV RWY 26, Orig
Winchester, IN, Randolph County, NDB RWY 25, Amdt 4, CANCELLED
Ruston, LA, Ruston Regional NDB RWY 36, Orig
Duluth, MN, Duluth Intl, COPTER ILS RWY 9, Orig
Mankato, MN, Mankato Muni, COPTER ILS RWY 33, Orig
Minneapolis, MN, Flying Cloud, COPTER ILS RWY 9R, Orig
Minneapolis, MN, Flying Cloud, RNAV RWY 36, Orig
Rochester, MN, Rochester International, COPTER ILS RWY 31, Orig
St. Paul, MN, St. Paul Downtown Holman Field, COPTER ILS RWY 32, Orig
Lebanon, NH, Lebanon Muni, GPS RWY 7, Orig
Lebanon, NH, Lebanon Muni, GPS RWY 25, Orig
McMinnville, TN, Warren County Memorial, GPS RWY 23, Orig

. . . Effective August 10, 2000

Merced, CA, Merced Muni-Macready Field, VOR RWY 12 Amdt 7B
Merced, CA, Merced Muni-Macready Field, LOC BC RWY 12, Amdt 10B
Merced, CA, Merced Muni-Macready Field, GPS RWY 12, Orig–B
Merced, CA, Merced Muni-Macready Field, GPS RWY 30, Orig–B
Paso Robles, CA, Paso Robles Muni, VOR/DME OR GPS RWY 19, Amdt 3A
Lamar, CO, Lamar Muni, VOR/DME RWY 36, Amdt 1A
Lamar, CO, Lamar Muni, GPS RWY 18, Orig–A
St. Augustine, FL, St. Augustine, GPS RWY 13, Orig–A
Marion, IL, Williamson County Regional, VOR OR GPS RWY 2, Amdt 12B
Marion, IL, Williamson County Regional, NDB OR GPS RWY 20, Amdt 9B
Mattoon/Charleston, IL, Coles County Memorial, NDB OR GPS RWY 29, Amdt 4B
Rockford, IL, Greater Rockford, NDB OR GPS RWY 1, Amdt 25A
St. Cloud, MN, St. Cloud Regional, GPS RWY 23, Orig–B
St. Cloud, MN, St. Cloud Regional, GPS RWY 5, Orig–B
Madison, SD, Madison Muni, GPS RWY 33, Orig–B
Pine Ridge, SD, Pine Ridge, GPS RWY 30, Orig–B
Petersburg, VA, Petersburg Muni, LOC RWY 5, Orig–C
Petersburg, VA, Petersburg Muni, NDB OR GPS RWY 5, Amdt 4B
Philipsburg, PA, Mid-State, VOR RWY 24, Amdt 15A
Philipsburg, PA, Mid-State, NDB RWY 16, Amdt 6A
Moses Lake, WA, Grant County Intl, GPS RWY 14L, Orig–A
Kenosha, WI, Kenosha Regional, VOR OR GPS RWY 14, Orig–D
Kenosha, WI, Kenosha Regional, NDB OR GPS RWY 6L, Amdt 1C
La Crosse, WI, La Crosse Muni, VOR RWY 13, Amdt 29A
La Crosse, WI, La Crosse Muni, VOR OR GPS RWY 36, Amdt 30A
Milwaukee, WI, General Mitchell Intl, NDB OR GPS RWY 1L, Amdt 4A
Milwaukee, WI, General Mitchell Intl, NDB OR GPS RWY 7R, Amdt 10C
Mosinee, WI, Central Wisconsin, VOR/DME OR GPS RWY 35, Amdt 7A
Mosinee, WI, Central Wisconsin, LOC BC RWY 26, Amdt 10B
Mosinee, WI, Central Wisconsin, NDB OR GPS RWY 17, Orig–A
Oshkosh, WI, Wittman Regional, NDB OR GPS RWY 36, Amdt 5C

[FR Doc. 00–11162 Filed 5–3–00; 8:45 am]

BILLING CODE 4910–13–M

SECURITIES AND EXCHANGE COMMISSION

17 CFR Parts 231, 241 and 271

[Release Nos. 33–7856, 34–42728, IC–24426; File No. S7–11–00]

RIN 3235–AG84

Use of Electronic Media

AGENCY: Securities and Exchange Commission.

ACTION: Interpretation; Solicitation of Comment.

SUMMARY: We are publishing guidance on the use of electronic media by issuers of all types, including operating companies, investment companies and municipal securities issuers, as well as market intermediaries. The guidance addresses the use of electronic media in three areas. First, we update our previous guidance on the use of electronic media to deliver documents under the federal securities laws. Second, we discuss an issuer's liability for web site content. Third, we outline basic legal principles that issuers and market intermediaries should consider in conducting online offerings. Additionally, because technology is evolving rapidly, we seek comment on a number of issues to assist us in determining whether further regulatory action is necessary.

DATES: *Effective Date:* The interpretations are effective on May 4, 2000. *Comment Date:* Comments should be submitted on or before June 19, 2000.

ADDRESSES: You should submit three copies of your comments to Jonathan G. Katz, Secretary, U.S. Securities and Exchange Commission, 450 Fifth Street, N.W., Washington, D.C. 20549–0609. You also may submit your comments electronically to the following electronic mail address: rule-comments@sec.gov. All comment letters should refer to File Number S7–11–00; please include this file number in the subject line if you use electronic mail. Comment letters will be available for inspection and copying at the Commission's Public Reference Room, 450 Fifth Street, N.W., Washington, D.C. 20549. We will post electronically submitted comment letters on our Internet web site <http://www.sec.gov>.[1]

FOR FURTHER INFORMATION CONTACT: P.J. Himelfarb and Mark A. Borges in the Office of Chief Counsel, Division of Corporation Finance, at (202) 942–2900. For questions regarding broker-dealers (including municipal securities dealers), please contact Paula R. Jenson, Deputy Chief Counsel, and Laura S. Pruitt in the Office of Chief Counsel, Division of Market Regulation, at (202) 942–0073. For questions regarding broker-dealer capacity, please contact Irene A. Halpin and Joan M. Collopy in the Office of Risk Management and Control, Division of Market Regulation, at (202) 942–0772. For questions regarding investment companies and investment advisers, please contact Alison M. Fuller, Assistant Chief Counsel, and David W. Grim in the Office of Chief Counsel, Division of Investment Management, at (202) 942–0659.

SUPPLEMENTARY INFORMATION:

Table of Contents

I. Introduction
II. Interpretive Guidance
A. Electronic Delivery
1. Telephonic Consent
2. Global Consent
3. Use of Portable Document Format
4. Clarification of the ''Envelope Theory''
B. Web Site Content
1. Issuer Responsibility for Hyperlinked Information
a. Context of the Hyperlink
b. Risk of Confusion
c. Presentation of the Hyperlinked Information
2. Issuer Communications During a Registered Offering
C. Online Offerings
1. Online Public Offerings
2. Online Private Offerings under Regulation D
3. Broker-Dealer Capacity
D. Technology Concepts
1. Access Equals Delivery
2. Electronic Notice
3. Implied Consent
4. Electronic-Only Offerings
5. Access to Historical Information
6. Communications When in Registration
7. Internet Discussion Forums
E. Examples
III. Solicitation of Comment

I. Introduction

By facilitating rapid and widespread information dissemination, the Internet has had a significant impact on capital-raising techniques and, more broadly, on the structure of the securities industry. Today, almost seven million people invest in the U.S. securities markets through online brokerage accounts.[2] To serve this increasing interest in online trading, there has been a surge in online brokerage firms offering an array of financial services.[3] Additionally, many publicly traded companies are incorporating Internet-based technology into their routine business operations, including setting up their own web sites to furnish company and industry information. Some provide information about their securities and the markets in which their securities trade. Investment companies use the Internet to provide investors with fund-related information, as well as shareholder services and educational materials. Issuers of municipal securities also are beginning to use the Internet to provide information about themselves and their outstanding bonds, as well as new offerings of their securities. The increased availability of information through the Internet has helped to promote transparency, liquidity and efficiency in our capital markets.

This release is designed to provide guidance to issuers of all types, including operating companies, investment companies and municipal securities issuers, as well as market intermediaries, on several issues involving the application of the federal securities laws to electronic media. In developing this guidance, we considered the significant benefits that investors can gain from the increased use of electronic media. We also considered the potential for electronic media, as instruments of inexpensive, mass communication, to be used to defraud the investing public.[4] We believe that the guidance advances our central statutory goals: Ensuring full and fair disclosure to investors; promoting the public interest, including investor protection, efficiency, competition and capital formation; and maintaining fair and orderly markets.

One of the key benefits of electronic media is that information can be disseminated to investors and the financial markets rapidly and in a cost-effective and widespread manner. Our recently adopted rules permitting increased communications with security holders and the markets in connection with business combinations and similar transactions should enable issuers to

[1] We do not edit personal, identifying information, such as names or electronic mail addresses, from electronic submissions. Submit only information you wish to make publicly available.

[2] Katrina Brooker, *They Want You Wired; Brokerage Firms of All Kinds are Tripping Over Themselves to Compete Online for Customers*, Fortune, Dec. 20, 1999, at 113. *See also Online Brokerage: Keeping Apace of Cyberspace*, Report of Laura S. Unger, Commissioner, U.S. Securities and Exchange Commission, Nov. 1999 (the Unger Report), at 1 (the percentage of equity trades conducted online in the first quarter of 1999 was 15.9% of all equity trades). The report is available on our Internet web site at <http://www.sec.gov/news/spstindx.htm>.

[3] It is estimated that over 160 brokerage firms offer their customers the ability to trade securities online. *See* the Unger Report, n. 2 above, at 15.

[4] Through March of this year, we had filed approximately 120 Internet-related enforcement actions. *See Statement of Chairman Arthur Levitt before the Senate Subcommittee on Commerce, Justice, State and the Judiciary, Committee on Appropriations, re: Appropriations for Fiscal Year 2001*, Mar. 21, 2000. The statement is available on our Internet web site at <http://www.sec.gov/news/testmony/ts052000.htm>. We also have conducted three Internet enforcement sweeps. See SEC Steps Up Nationwide Crackdown Against Internet Fraud, Charging 26 Companies and Individuals for Bogus Securities Offerings, SEC Press Release 99–49 (May 12, 1999); SEC Continues Internet Fraud Crackdown, SEC Press Release 99–24 (Feb. 25, 1999); Purveyors of Fraudulent Spam, Online Newsletters, Message Board Postings, and Websites, SEC Press Release 98–117 (Oct. 28, 1998). These press releases are available on our Internet web site at <http://www.sec.gov/news/presindx.htm>.

take further advantage of this benefit.[5] Thus far, we have not extended the same flexible treatment to securities offerings aimed at raising capital. For these offerings, we are considering separately the liberalization of communications by issuers and other market participants.[6]

Today's interpretive guidance will do the following:

• Facilitate electronic delivery of communications by clarifying that

—investors may consent to electronic delivery telephonically;

—intermediaries may request consent to electronic delivery on a ''global,'' multiple-issuer basis;

—issuers and intermediaries may deliver documents in portable document format, or PDF, with appropriate measures to assure that investors can easily access the documents;

—an embedded hyperlink[7] within a Section 10 prospectus[8] or any other document required to be filed or delivered under the federal securities laws causes the hyperlinked information to be a part of that document;

—the close proximity of information on a web site to a Section 10 prospectus does not, by itself, make that information an ''offer to sell,'' ''offer for sale'' or ''offer'' within the meaning of Section 2(a)(3) of the Securities Act[9]; and

—municipal securities underwriters may rely on a municipal securities issuer to identify the documents on the issuer's web site that comprise the preliminary, deemed final and final official statements.

• Reduce uncertainty regarding permissible web site content to encourage more widespread information dissemination to all investors by clarifying

—some of the facts and circumstances that may result in an issuer having adopted information on a third-party web site to which the issuer has established a hyperlink for purposes of the anti-fraud provisions of the federal securities laws; and

—general legal principles that govern permissible web site communications by issuers when in registration.[10]

• Facilitate online offerings by clarifying

—general legal principles that broker-dealers should consider when developing and implementing procedures for online public offerings; and

—circumstances under which a third-party service provider may establish a web site to facilitate online private offerings.

II. Interpretive Guidance

A. Electronic Delivery

We first published our views on the use of electronic media to deliver information to investors in 1995.[11] The 1995 Release focused on electronic delivery of prospectuses, annual reports to security holders and proxy solicitation materials under the Securities Act of 1933,[12] the Securities Exchange Act of 1934[13] and the Investment Company Act of 1940.[14] Our 1996 electronic media release[15] focused on electronic delivery of required information by broker-dealers (including municipal securities dealers) and transfer agents under the Exchange Act and investment advisers under the Investment Advisers Act of 1940.[16]

We believe that the framework for electronic delivery established in these releases continues to work well in today's technological environment. Issuers and market intermediaries therefore must continue to assess their compliance with legal requirements in terms of the three areas identified in the releases—notice, access and evidence of delivery. Although we believe that this framework continues to be appropriate, we provide below guidance that will clarify some regulatory issues relating to electronic delivery.[17]

1. Telephonic Consent

As noted above, one of the three elements of satisfactory electronic delivery is obtaining evidence of delivery. The 1995 Release provided that one method for satisfying the evidence-of-delivery element is to obtain an informed consent from an investor to receive information through a particular electronic medium.[18] The 1996 Release stated that informed consent should be made by written or electronic means.[19] Some securities lawyers have concluded that, based on the 1996 Release, telephonic consent generally is not permitted. Others have opined that telephonic consent may be permissible if an issuer or intermediary retains a record of the consent.[20]

In today's markets, where speed is a priority, significant matters often are communicated telephonically. It is common (and increasingly popular), for instance, for security holders to vote proxies and even transfer assets over the telephone where permitted under applicable state law.[21] In addition, investors can place orders to trade securities over the telephone. We believe these practices have developed because business can be transacted as effectively over the telephone today as it can in paper. We are of the view, therefore, that an issuer or market

[5] *See* Securities Act Release No. 7760 (Oct. 22, 1999) [64 FR 61408]. This new regulatory system relaxes restrictions on communications in cash tender offers, mergers, exchange offers and proxy solicitations.

[6] We also are considering separately the use of road shows in the capital-raising context.

[7] A ''hypertext link,'' or ''hyperlink,'' is an electronic path often displayed in the form of highlighted text, graphics or a button that associates an object on a web page with another web page address. It allows the user to connect to the desired web page address immediately by clicking a computer-pointing device on the text, graphics or button. *See* Harvey L. Pitt & Dixie L. Johnson, *Avoiding Spiders on the Web: Rules of Thumb for Issuers Using Web Sites and E-Mail*, in Practising Law Institute, Securities Law & the Internet, No. 1127 (1999), at 107–118, n. 5.

[8] In this release, when we refer to a Section 10 prospectus, we are referring both to prospectuses satisfying the requirements of Section 10(a) of the Securities Act, 15 U.S.C. 77j(a), and prospectuses satisfying the requirements of Section 10(b) of the Securities Act, 15 U.S.C. 77j(b).

[9] 15 U.S.C. 77b(a)(3).

[10] ''In registration'' is a term that refers to the entire registration process under the Securities Act, ''at least from the time an issuer reaches an understanding with the broker-dealer which is to act as managing underwriter [before] the filing of a registration statement'' until the end of the period during which dealers must deliver a prospectus. *See* Securities Act Release No. 5180, at n. 1 (Aug. 16, 1971) [36 FR 16506]. An issuer will not be considered to be ''in registration'' at any particular point in time solely because it has filed one or more registration statements on Form S–8, 17 CFR 239.16b, or it has on file a registration statement for a delayed shelf offering on Form S–3, S–4, F–3 or F–4, 17 CFR 239.13, 239.25, 239.33 or 239.34, and has not commenced or is not in the process of offering or selling securities ''off of the shelf.''

[11] Securities Act Release No. 7233 (Oct. 6, 1995) [60 FR 53458] (the 1995 Release).

[12] [12]: 15 U.S.C. 77a, *et seq.*

[13] 15 U.S.C. 78a, *et seq.*

[14] 15 U.S.C. 80a–1, *et seq.*

[15] Securities Act Release No. 7288 (May 9, 1996) [61 FR 24644] (the 1996 Release). The 1996 Release also provided additional examples supplementing the guidance in the 1995 Release. Since 1996, we have further addressed the use of electronic media in the context of offshore sales of securities and investment services, *see* Securities Act Release No. 7516 (Mar. 23, 1998) [63 FR 14806] (the 1998 Release), and cross-border tender offers, *see* Securities Act Release No. 7759, Section II.G (Oct. 22, 1999) [64 FR 61382].

[16] 15 U.S.C. 80b–1, *et seq.*

[17] In Section D below, we also request comment on a number of additional issues involving electronic delivery.

[18] *See* the 1995 Release, n. 11 above, at n. 29 and the accompanying text.

[19] *See* the 1996 Release, n. 15 above, at n. 23.

[20] *See* John R. Hewitt & Richard B. Carlson, *Securities Practice and Electronic Technology,* Law Journal Seminars-Press (1998), at 3.01[1].

[21] See Stephen I. Glover & Lanae Holbrook, *Electronic Proxies,* Nat. L. J., Mar. 29, 1999, at B5; *See also* Jennie Blizzard, *Investor Relations Gets Tech Updates; Proxy Voting Among the Signs of Change,* Rich. Times Dispatch, Mar. 28, 1999, at E1. Similarly, mutual fund shareholders may effect purchases and redemptions of fund shares telephonically, where permitted by the fund and under applicable state law.

intermediary may obtain an informed consent telephonically, as long as a record of that consent is retained.[22] As with written or electronic consent, telephonic consent must be obtained in a manner that assures its authenticity.[23]

2. Global Consent

The 1995 Release stated that consent to electronic delivery could relate to all documents to be delivered by or on behalf of a single issuer.[24] The 1995 Release also stated that an issuer could rely on consent obtained by a broker-dealer or other market intermediary.[25] Some securities lawyers have questioned the permissible scope of consents that are obtained by broker-dealers or banks (or their agents) from investors who hold securities of multiple issuers in their brokerage, trust or other accounts. Specifically, they have asked whether an investor can consent to electronic delivery of *all* documents of *any* issuer in which that investor buys or owns securities through a particular intermediary.

We believe that an investor may give a global consent to electronic delivery—relating to all documents of any issuer—so long as the consent is informed.[26] Given the broad scope of a global consent and its effect on an investor's ability to receive important documents, we believe intermediaries should take particular care to ensure that the investor understands that he or she is providing a global consent to electronic delivery. For example, a global consent that is merely a provision of an agreement that an investor is required to execute to receive other services may not fully inform the investor. To best inform investors, broker-dealers could obtain consent from a new customer through an account-opening agreement that contains a separate section with a separate electronic delivery authorization, or through a separate document altogether. We believe that a global consent to electronic delivery would not be an informed consent if the opening of a brokerage account were conditioned upon providing the consent.[27] Therefore, absent other evidence of delivery,[28] we believe that if the opening of an account were conditioned upon providing a global consent, evidence of delivery would not be established.

Similarly, because of the broad scope of a global consent, an investor should be advised of his or her right to revoke the consent at any time and receive all covered documents in paper format. We recognize that a system allowing an investor to revoke consent to electronic delivery with respect to some issuers' documents, but not others, may be difficult to administer. An intermediary might be uncertain about whether or not it has complied with its delivery obligations. Thus, intermediaries, if they wish, may require revocation on an ''all-or-none'' basis, provided that this policy is adequately disclosed when the consent is obtained.

As noted in the 1995 Release, an informed consent must specify the type of electronic media to be used (for example, a limited proprietary system or an Internet web site).[29] This is particularly true for global consents where multiple documents may be delivered through different media. An investor should not be disadvantaged by inadvertently consenting to electronic delivery through a medium that is not compatible with the investor's computer hardware and software.[30]

Although a global consent must identify the various types of electronic media that may be used to constitute an informed consent, it need not specify the medium to be used by any particular issuer. Additionally, the consent need not identify the issuers covered by the consent. If the consent does identify the covered issuers, it also may provide that additional issuers can be added at a later time without further consent. Investors cannot be required to accept delivery via additional media at a later time without further informed consent.[31]

3. Use of Portable Document Format

The 1995 Release stated that ''the use of a particular medium should not be so burdensome that intended recipients cannot effectively access the information provided.'' [32] Many issuers have interpreted this statement to preclude delivery of PDF documents which cannot be accessed without special software. Instead, those issuers use hypertext markup language, or HTML, which may be viewed without the need for additional software.[33] We believe that issuers and market intermediaries delivering documents electronically may use PDF if it is not so burdensome as effectively to prevent access. For example, PDF could be used if issuers and intermediaries

- inform investors of the requirements necessary to download PDF when obtaining consent to electronic delivery; and
- provide investors with any necessary software and technical assistance at no cost.[34]

4. Clarification of the ''Envelope Theory''

The 1995 Release provided a number of examples designed to assist issuers and market intermediaries in meeting their delivery obligations through electronic media. One example provided that documents in close proximity on the same web site menu are considered delivered together.[35] Other examples confirmed the proposition that documents hyperlinked to each other are considered delivered together as if they were in the same paper envelope.[36] The premise

[22] The record of telephonic consent should contain as much detail as any written consent, including whether the consent obtained is global and what electronic media will be used.

[23] *See,* for example, Ex. 1 and Ex. 2 in Section E below.

[24] *See* the 1995 Release, n. 11 above, at Ex. 3 (consent by investor John Doe to delivery of *all* future documents by electronic mail) and Ex. 26 (consent by record holder Jane Doe to delivery of *all* documents via Company XYZ's web site).

[25] *Id.* at Ex. 6. Under this interpretation, we also believe, and we further clarify today, that an issuer or broker-dealer may rely on a consent obtained by a third-party document delivery service, but the issuer or broker-dealer retains the ultimate responsibility for assuring that the consent is authentic and for the delivery of required documents.

[26] Generally, a consent is considered to be informed when an investor is apprised that the document to be provided will be available through a specific electronic medium or source (for example, through a limited proprietary system or at an Internet web site) and that there may be costs associated with delivery (for example, in connection with online time). In addition, for a consent to be informed an investor must be apprised of the time and scope parameters of the consent. For example, an investor should be made aware of whether the consent is indefinite and extends to more than one type of document. *See* note 29 of the 1995 Release, n. 11 above, for a discussion of the information that must be disclosed in an informed consent.

[27] We recognize that some brokerage firms require accounts to be opened online and all account transactions to be initiated and conducted online. In these instances only, the opening of a brokerage account may be conditioned upon providing global consent to electronic delivery.

[28] *See* the 1995 Release, n. 11 above, at Section II.C.

[29] *See* n. 18 above.

[30] *See,* for example, Ex. 3 in Section E below.

[31] *See,* for example, Ex. 4 in Section E below.

[32] *See* the 1995 Release, n. 11 above, at n. 24 and the accompanying text.

[33] In 1999, we began modernizing the Electronic Data Gathering, Analysis and Retrieval, or EDGAR, system. *See* Securities Act Release No. 7684 (May 17, 1999) [64 FR 27888]. One effect of the modernization was to allow filings to be submitted in HTML. Filers also were given the option of accompanying their required filings with unofficial copies in PDF.

[34] *See,* for example, Ex. 5 in Section E below. We remind issuers and intermediaries that we will not consider an electronically delivered document to have been preceded or accompanied by another electronic document unless investors are provided with reasonably comparable access to both documents. *See* the 1996 Release, n. 15 above, at Ex. 4.

[35] *See* the 1995 Release, n. 11 above, at Ex. 14.

[36] *Id.* at Ex. 15 and Ex. 16.

underlying these examples has come to be called the ''envelope theory.''

The purpose of these examples was to provide assurance to issuers and intermediaries that they are delivering multiple documents simultaneously to investors when so required by the federal securities laws. For example, in a registered offering, sales literature cannot be delivered to an investor unless the registration statement has been declared effective and a final prospectus accompanies or precedes the sales literature.[37] It is easy to establish concurrent delivery when multiple documents are included in one paper envelope that is delivered by U.S. postal mail or a private delivery service. When electronic delivery is used, however, it is somewhat more difficult to establish whether multiple documents may be considered delivered together. The guidance provided in the 1995 Release about the use of ''virtual'' envelopes was intended to alleviate this difficulty.

Nevertheless, some issuers and intermediaries believe that the envelope theory has created ambiguities as to appropriate web site content when an issuer is in registration.[38] Some securities lawyers have expressed concern that if a Section 10 prospectus is posted on a web site, the operation of the envelope theory causes everything on the web site to become part of that prospectus. They also have raised concerns that information on a web site that is outside of the four corners of the Section 10 prospectus, but in close proximity [39] to it, would be considered free writing.[40]

Information on a web site would be part of a Section 10 prospectus only if an issuer (or person acting on behalf of the issuer, including an intermediary with delivery obligations) acts to make it part of the prospectus. For example, if an issuer includes a hyperlink within a Section 10 prospectus, the hyperlinked information would become a part of that prospectus.[41] When embedded hyperlinks are used,[42] the hyperlinked information must be filed as part of the prospectus in the effective registration statement and will be subject to liability under Section 11 of the Securities Act.[43] In contrast, a hyperlink from an external document to a Section 10 prospectus would result in both documents being delivered together, but would not result in the non-prospectus document being deemed part of the prospectus. Issuers nevertheless may be subject to liability under Section 12 of the Securities Act [44] for the external document depending on whether the external document is itself a prospectus or part of one.

With respect to the free writing concern, the focus on the location of the posted prospectus is misplaced. Regardless of whether or where the Section 10 prospectus is posted, the web site content must be reviewed in its entirety to determine whether it contains impermissible free writing.[45]

[37] *See* Sections 2(a)(10) and 5(b) of the Securities Act, 15 U.S.C.§§ 77b(a)(10) and 77e(b).

[38] Some securities lawyers have raised similar issues concerning the use of a web site in connection with proxy solicitations, tender offers and other transactions that require documents to be filed or delivered under the federal securities laws. Although the guidance in this section focuses on issues relating to the registration process, it applies by analogy to all documents required to be filed or delivered under the federal securities laws.

[39] In Example 14 of the 1995 Release, *see* n. 11 above, we stated that documents that appear in close proximity to each other on the same web site menu are considered delivered together. Given the layout of a typical web page, which often includes multiple ''buttons'' spread throughout the page rather than in menu format, issuers may be confused by our reference in the 1995 Release to ''menu.'' Two or more documents will be considered to be delivered together if the buttons are in proximity to each other on the same screen, whether or not they are on the same ''menu.''

[40] By ''free writing,'' we mean communications that would constitute an ''offer to sell,'' ''offer for sale'' or ''offer,'' including every attempt or offer to dispose of, or solicitation of an offer to buy, a security or interest in a security, for value under Section 2(a)(3) of the Securities Act made by means other than a prospectus satisfying the requirements of Section 10 of the Securities Act, 15 U.S.C. 77j. Section 2(a)(10) of the Securities Act defines the term ''prospectus.''

[41] When an issuer includes a hyperlink within a document required to be filed or delivered under the federal securities laws, we believe it is appropriate for the issuer to assume responsibility for the hyperlinked information as if it were part of the document. We believe that the inclusion of a hyperlink to an external web site or document demonstrates the hyperlinking party's intent to make the information part of its communication with investors, security holders and the markets. Additionally, because written offers must be made exclusively through a Section 10 prospectus, when an issuer includes a hyperlink to an external web site or document within a Section 10 prospectus, the issuer expresses its intent to have the hyperlinked information treated as part of this exclusive means of offering its securities. An issuer (or person acting on behalf of the issuer, including an intermediary with delivery obligations) must make it clear to investors where the document from which it is hyperlinking begins and where it ends.

We are aware that today many standard software programs can automatically convert an inactive uniform resource locator, or URL, into an active hyperlink, either at the time the document including the URL is created or when the document is later accessed. Consequently, as with an embedded hyperlink, an issuer that includes a URL to a web site in a Section 10 prospectus or other document required to be filed or delivered under the federal securities laws is responsible for information on the site that is accessible through the resulting hyperlink. To the extent that the document is required to be filed with the Commission, the hyperlinked information must be filed as part of the document. Inclusion of the URL to the Commission's Internet web site is mandated by some of our disclosure requirements. *See,* for example, Item 502(a)(2) of Regulation S–K, 17 CFR 229.502(a)(2); Item 12(c)(2)(ii) of Form S–3, 17 CFR 239.13. Additionally, the Division of Corporation Finance has previously indicated that the inclusion of the URL for an issuer's web site in a registration statement, along with the statement ''[O]ur SEC filings are also available to the public from our web site,'' will not, by itself, include or incorporate by reference the information on the site into the registration statement (unless the issuer otherwise acts to incorporate the information by reference). *See* Division of Corporation Finance interpretive letters *Baltimore Gas and Electric Company* (Jan. 6, 1997); *ITT Corporation* (Dec. 6, 1996). In these two situations, we would not consider the presence of the URL to make our web site, or an issuer's web site, as the case may be, part of a document if the party presenting the URL takes reasonable steps to ensure that the URL is inactive (for example, by removing ''a>href'' tagging) and includes a statement to denote that the URL is an inactive textual reference only.

[42] An issuer may not use embedded hyperlinks exclusively to satisfy the line item disclosure requirements of its filings under the federal securities laws. For example, an issuer filing a registration statement on Form S–1, 17 CFR 239.11, could include embedded hyperlinks to its Exchange Act reports so that they are readily available, but only if the issuer otherwise includes full disclosure of all required issuer information within the body of the Section 10 prospectus. This is because the Commission's rules and forms contemplate a single comprehensive, integrated document so that readers can understand the document's content without having to access numerous other documents.

We also note that simply embedding a hyperlink within a document does not satisfy the line item disclosure requirement for the incorporation of certain information by reference as provided under the Commission's rules and forms. In order for a document to be incorporated by reference in a filed document, an issuer must include a statement to that effect in the document listing the incorporated documents. *See,* for example, Item 12(a) of Part I of Form S–3; General Instruction G(4) of Form 10–K, 17 CFR 249.310; Exchange Act Rule 12b–23(b), 17 CFR 240.12b–23(b).

[43] 15 U.S.C. 77k. *See,* for example, Ex. 6 in Section E below. Of course, other Securities Act and Exchange Act liability provisions also may apply. *See,* for example, Sections 12(a)(2) and 17(a) of the Securities Act, 15 U.S.C. 77*l*(a)(2) and 77q(a), Section 10(b) of the Exchange Act, 15 U.S.C 78j(b), and Rule 10b–5, 17 CFR 240.10b–5. Although a prospectus or other disclosure document on an issuer's web site may contain a hyperlink to an external web site or document under the circumstances described in this section, a hyperlink to an external site or document (including exhibits) currently may *not* be embedded in any filed EDGAR document. *See* Rule 105 of Regulation S–T, 17 CFR 232.105; Securities Act Release No. 7684 (May 17, 1999) [64 FR 27888]. However, filers may include hyperlinks to different sections within a single HTML document. Under our recently adopted rules implementing the next phase of EDGAR modernization, the system now permits hyperlinks from an EDGAR filing to its exhibits and to other filings in the EDGAR database on our Internet web site at <http://www.sec.gov>. *See* Securities Act Release No. 7855 (Apr. 24, 2000) [65 FR 24788]. The new rules address the liability treatment of material hyperlinked from the EDGAR database into EDGAR filings, but do not address broader issues of hyperlinks on issuers' web sites.

[44] 15 U.S.C. 77*l*.

[45] *See* n. 40 above. While the proximity of information on an issuer's web site to a Section 10 prospectus posted on the same site will determine whether multiple documents are delivered together, it does not dispose of the issue of whether the information would constitute an ''offer to sell,'' ''offer for sale'' or ''offer'' under Section 2(a)(3) of the Securities Act. We provide guidance in Section

Continued

The Commission staff will continue to raise questions about information on an issuer's web site that is either inconsistent with the issuer's Section 10 prospectus or that would constitute an ''offer to sell,'' ''offer for sale'' or ''offer'' under Section 2(a)(3) of the Securities Act.

Municipal securities market participants involved in offering and selling municipal securities face similar issues under Exchange Act Rule 15c2–12 [46] in connection with their use of electronic media. Rule 15c2–12 requires municipal securities underwriters of primary offerings to, among other things,

- obtain and review an official statement that the municipal securities issuer deems final;
- send the final official statement to any potential customer; and
- in negotiated sales, send the most recent preliminary official statement, if one exists, to any potential customer.

Under Rule 15c2–12, a final official statement can be a single document or set of documents. In a municipal securities offering, if a municipal securities issuer puts its official statement on its web site and also establishes hyperlinks to other web sites, a question arises as to what constitutes the final official statement that a municipal securities underwriter has an obligation to obtain and send to potential customers. For purposes of satisfying its obligations under Rule 15c2–12, a municipal securities underwriter may rely on the municipal securities issuer to identify which of the documents on, or hyperlinked from, the issuer's web site comprise the preliminary, deemed final and final official statements, even if the issuer's web site contains other documents or hyperlinks to other web sites. Hyperlinks embedded within an official statement itself, however, will be considered part of the official statement, even if a municipal securities issuer has not specifically identified the embedded hyperlinked information. For any municipal securities offering subject to Rule 15c2–12, the paper and electronic versions of each of the preliminary, deemed final and final official statements must be the same. Municipal securities issuers are reminded that, whether or not the offering of their securities is exempt from Rule 15c2–12, the anti-fraud provisions of the federal securities laws apply to their official statements and other disclosures. [47]

B. Web Site Content

Issuers have raised a number of questions about their responsibility for the content of their web sites, both when they are in registration and when they are not. It is important for issuers, including municipal securities issuers, to keep in mind that the federal securities laws apply in the same manner to the content of their web sites as to any other statements made by or attributable to them. While many of these questions may be resolved by reference to current law, we recognize that further guidance would be helpful on two fundamental issues affecting web site content. We first consider issuer responsibility for hyperlinked information under the anti-fraud provisions of the federal securities laws. We then discuss the regulation of issuers' web site communications during registered offerings.

1. Issuer Responsibility for Hyperlinked Information

Issuers [48] are responsible for the accuracy of their statements that reasonably can be expected to reach investors or the securities markets [49] regardless of the medium through which the statements are made, including the Internet. Some issuers have asked whether they can be held liable under Section 10(b) of the Exchange Act and Rule 10b–5 for third-party information to which they have hyperlinked from their web sites.[50] This concern stems largely from case law [51] and our findings in the 1997 settlement of an enforcement action.[52] These questions focus on the consequences of issuer hyperlinks to analyst research reports, although issuers also have expressed concern about their potential liability for hyperlinks to other information as well.

Whether third-party information is attributable to an issuer depends upon whether the issuer has involved itself in the preparation of the information or explicitly or implicitly endorsed or approved the information. In the case of issuer liability for statements by third parties such as analysts, the courts and we have referred to the first line of inquiry as the ''entanglement'' theory and the second as the ''adoption'' theory.

In the case of hyperlinked information, liability under the ''entanglement'' theory would depend upon an issuer's level of pre-publication involvement in the preparation of the information.[53] In contrast, liability under the ''adoption'' theory would depend upon whether, after its publication, an issuer, explicitly or implicitly, endorses or approves the hyperlinked information.[54]

Below we discuss factors that we believe are relevant in deciding whether an issuer has adopted information on a third-party web site to which it has established a hyperlink.[55] While the

B below about permissible communications on an issuer's web site when the issuer is in registration.

[46] 17 CFR 240.15c2–12.

[47] See Exchange Act Release No. 7049 (Mar. 9, 1994) [59 FR 12748]. All issuers, whether offering and selling securities in registered or exempt offerings, are subject to anti-fraud liability. *See* Section 17(a) of the Securities Act, Section 10(b) of the Exchange Act and Rule 10b–5.

[48] While our guidance in this section addresses the responsibilities of issuers, broker-dealers and investment advisers also should carefully consider their responsibilities for hyperlinked information.

[49] *See* Securities Act Release No. 6504 (Jan. 20, 1984) [49 FR 2468]. Where a statement is materially misleading, an issuer and any persons responsible for the statement would be liable under the anti-fraud provisions of the federal securities laws. *See,* for example, *SEC* v. *Texas Gulf Sulphur Co.,* 401 F.2d 833 (2d Cir. 1968) (*en banc*), *cert. denied sub nom., Coates* v. *SEC,* 394 U.S. 976 (1969).

[50] When an issuer is offering or selling securities, similar questions arise under Section 17(a) of the Securities Act. Although our discussion is framed in terms of Section 10(b) of the Exchange Act and Rule 10b–5, it applies equally to questions arising under Section 17(a).

[51] *See* n. 54 below.

[52] *See In the Matter of Presstek, Inc.,* Exchange Act Release No. 39472 (Dec. 22, 1997), n. 54 below.

[53] *See,* for example, *Elkind* v. *Liggett & Myers, Inc.,* 635 F.2d 156 (2d Cir. 1980); *In the Matter of Syntex Corp. Sec. Litig.,* 855 F.Supp. 1086 (N.D. Cal. 1993); *In the Matter of Caere Corp. Sec. Litig.,* 837 F. Supp. 1054 (N.D. Cal. 1993).

[54] *See,* for example, *In the Matter of Cypress Semiconductor Sec. Litig.,* 891 F. Supp. 1369, 1377 (N.D. Cal. 1995), *aff'd sub nom. Eisenstadt* v. *Allen,* 113 F.3d 1240 (9th Cir. 1997) (''distributing analysts' reports to potential investors may, depending on the circumstances, amount to an implied representation that the reports are accurate''); *In the Matter of RasterOps Corporation Sec. Litig.,* [1994–95 Tr. Binder] Fed.Sec.L.Rep. (CCH) ¶ 98,467 (N.D. Cal. 1994) (''act of circulating the reports amounts to an implied representation that the information contained in the reports is accurate or reflects the company's views''). *See also Presstek,* n. 52 above. In *Presstek,* we stated that ''in the Commission's view, under certain circumstances, an issuer that disseminates false third-party reports may adopt the contents of those reports and be fully liable for the misstatements contained in them, even if it had no role whatsoever in the preparation of the report.'' *Id.* at 32.

[55] We do not discuss the application of the ''entanglement'' theory to hyperlinked information on third-party web sites. We recognize that the ''entanglement'' and ''adoption'' theories often overlap and that some of the factors relating to an adoption analysis also may apply to an entanglement analysis. Once the threshold issue of whether hyperlinked third-party information has been adopted by an issuer has been answered, a trier of fact would then turn to the issue of whether a claim has been established under Section 10(b) of the Exchange Act and Rule 10b–5. A claim under Section 10(b) and Rule 10b–5 generally includes the following elements:

—misrepresentation of a material fact or omission of a material fact necessary to make a statement, in light of the circumstances under which it was made, not misleading,

—in the sale, or in connection with the purchase or sale, of a security,

—with the requisite state of mind, or scienter.

factors we discuss below form a useful framework of analysis, we caution that they are neither exclusive nor exhaustive. We are not establishing a ''bright line'' mechanical test. We do not mean to suggest that any single factor, standing alone, would or would not dictate the outcome of the analysis.

a. Context of the Hyperlink

Whether third-party information to which an issuer has established a hyperlink is attributable to the issuer is likely to be influenced by what the issuer says about the hyperlink or what is implied by the context in which the issuer places the hyperlink. An issuer might explicitly endorse the hyperlinked information. For example, a hyperlink might be incorporated in or accompany a statement such as ''XYZ's web site contains the best description of our business that is currently available.'' Likewise, a hyperlink might be used to suggest that the hyperlinked information supports a particular assertion on an issuer's web site. For example, the hyperlink may be incorporated in or accompany a statement such as, ''As reported in Today's Widget, our company is the leading producer of widgets worldwide.'' Moreover, even when an issuer remains silent about the hyperlink, the context nevertheless may imply that the hyperlinked information is attributable to the issuer.[56]

In the context of a document required to be filed or delivered under the federal securities laws, we believe that when an issuer embeds a hyperlink to a web site within the document, the issuer should always be deemed to be adopting the hyperlinked information.[57] In addition, when an issuer is in registration, if the issuer establishes a hyperlink (that is not embedded within a disclosure document) from its web site to information that meets the definition of an ''offer to sell,'' ''offer for sale'' or ''offer'' under Section 2(a)(3) of the Securities Act, a strong inference arises that the issuer has adopted that information for purposes of Section 10(b) of the Exchange Act and Rule 10b–5.[58]

b. Risk of Confusion

Another factor we would consider in determining whether an issuer has adopted hyperlinked information is the presence or absence of precautions against investor confusion about the source of the information. Hyperlinked information on a third-party web site may be less likely to be attributed to an issuer if the issuer makes the information accessible only after a visitor to its web site has been presented with an intermediate screen that clearly and prominently indicates that the visitor is leaving the issuer's web site and that the information subsequently viewed is not the issuer's. Similarly, there may be less likelihood of confusion about whether an issuer has adopted hyperlinked information if the issuer ensures that access to the information is preceded or accompanied by a clear and prominent statement from the issuer disclaiming responsibility for, or endorsement of, the information. In contrast, the risk of investor confusion is higher when information on a third-party web site is framed[59] or inlined.[60] We are not suggesting, however, that statements and disclaimers will insulate an issuer from liability for hyperlinked information when the relevant facts and circumstances otherwise indicate that the issuer has adopted the information.[61]

c. Presentation of the Hyperlinked Information

The presentation of the hyperlinked information by an issuer is relevant in determining whether the issuer has adopted the information. For example, an issuer's efforts to direct an investor's attention to particular information by selectively providing hyperlinks is a relevant consideration in determining whether the information so hyperlinked has been adopted by the issuer. Where a wealth of information as to a particular matter is available, and where the information accessed by the hyperlink is not representative of the available information, an issuer's creation and maintenance of the hyperlink could be an endorsement of the selected information. Similarly, an issuer that selectively establishes and terminates hyperlinks to third-party web sites depending upon the nature of the information about the issuer on a particular site or sites may be viewed as attempting to control the flow of information to investors. Again, this suggests that the issuer has adopted the information during the periods that the hyperlink is operative.

Finally, the layout of the screen containing a hyperlink is relevant in determining whether an issuer will be deemed to have adopted hyperlinked information. Any action to differentiate a particular hyperlink from other hyperlinks on an issuer's web site, through its prominence, size or location, or to draw an investor's attention to the hyperlink, may suggest that the issuer favors the hyperlinked information over other information available to the investor on or through the site. For example, a particular hyperlink might be presented in a different color, type font or size from other hyperlinks on an issuer's web site. Where the method of presenting the hyperlink influences disproportionately an investor's decision to view third-party information, the hyperlinked information is more likely attributable to an issuer.

Liability to a private plaintiff also requires proof that the plaintiff justifiably relied on the statement containing the material misrepresentation or omission and was injured as a result. *See,* for example, *Robbins* v. *Koger Properties, Inc.,* 116 F.3d 1441, 1447 (11th Cir. 1997). Investor reliance on a material misrepresentation or omission need not be shown in a Commission enforcement action. *See Ernst & Ernst* v. *Hochfelder,* 425 U.S. 185 (1976). Under certain circumstances, there may be a rebuttable presumption of reliance. *See,* for example, *Basic, Inc.* v. *Levinson,* 485 U.S. 224 (1988) (discussing the ''fraud on the market'' theory). Similarly, where materiality is established, reliance in an omissions case is presumed. *See Affiliated Ute Citizens of Utah* v. *United States,* 406 U.S. 128 (1972).

[56] *See* Section B.1.c below.

[57] See Section A.4 above.

[58] See Section B.2 below for a discussion of the effect of an issuer hyperlink to information on a third-party web site for purposes of Section 5 of the Securities Act.

[59] ''Framing'' involves a form of hyperlinking. Upon clicking highlighted text, graphics or a button, information from a separate web site is imported into the web site that is being used and is displayed within a constant on-screen border, or frame. In this case, information from an issuer's web site and the hyperlinked web site would be visible at the same time. The user may not be aware that the displayed material is actually from a different web site.

[60] ''Inlining'' is similar to framing but does not result in a visible border. As with framing, information from an issuer's web site and the hyperlinked web site would be visible at the same time. Also, as with framing, a web site user may not be aware that the displayed material is actually from a different web site.

[61] Some of our prior statements may have created the erroneous impression that the use of a disclaimer, in and of itself, may be effective to shield an issuer from adoption of, and liability under Section 10(b) of the Exchange Act and Rule 10b–5 in connection with, information on a third-party web site to which the issuer has established a hyperlink. *See,* for example, the 1998 Release, n. 15 above, in which we addressed when the posting of offering or solicitation materials on a web site would not be considered activity taking place in the United States. The 1998 Release did not address the anti-fraud provisions of the federal securities laws, however, which continue to reach all Internet activities that satisfy the relevant jurisdictional tests. We do not view a disclaimer alone as sufficient to insulate an issuer from responsibility for information that it makes available to investors whether through a hyperlink or otherwise. To conclude otherwise would permit unscrupulous issuers to make false or misleading statements available to investors without fear of liability as long as the information is accompanied by a disclaimer. Further, we remind issuers that specific disclaimers of anti-fraud liability are contrary to the policies underpinning the federal securities laws. *See* Section 14 of the Securities Act, 15 U.S.C. 77n, Section 29(a) of the Exchange Act, 15 U.S.C. 78cc(a), Section 47(a) of the Investment Company Act, 15 U.S.C. 80a–46(a), and Section 215(a) of the Investment Advisers Act, 15 U.S.C. 80b–15(a).

2. Issuer Communications During a Registered Offering

Because of the increasing use by issuers of web sites to communicate in the ordinary course of business with their security holders, customers, suppliers and others, issuers have asked us for guidance on the permissible content of their Internet communications when they are in registration.[62] An issuer in registration must consider the application of Section 5 of the Securities Act[63] to all of its communications with the public.[64] In our view, this includes information on an issuer's web site as well as information on a third-party web site to which the issuer has established a hyperlink. The Securities Act and accompanying regulations currently limit information about an offering that issuers and persons acting on their behalf may provide to investors to the content of the Section 10 prospectus and any permissible communications under available Securities Act safe harbors.[65] Thus, information on a third-party web site to which an issuer has established a hyperlink that meets the definition of an ''offer to sell,'' ''offer for sale'' or ''offer'' under Section 2(a)(3) of the Securities Act raises a strong inference that the hyperlinked information is attributable to the issuer for purposes of a Section 5 analysis.[66] To ensure compliance with Section 5, an issuer in registration should carefully review its web site and any information on third-party web sites to which it hyperlinks.

An issuer that is in registration should maintain communications with the public as long as the subject matter of the communications is limited to ordinary-course business and financial information, which may include the following:

- advertisements concerning the issuer's products and services;
- Exchange Act reports required to be filed with the Commission;
- proxy statements, annual reports to security holders and dividend notices;
- press announcements concerning business and financial developments;
- answers to unsolicited telephone inquiries concerning business matters from securities analysts, financial analysts, security holders and participants in the communications field who have a legitimate interest in the issuer's affairs; and
- security holders' meetings and responses to security holder inquiries relating to these matters.[67]

Statements containing information falling within any of the foregoing categories, or an available Securities Act safe harbor,[68] may be posted on an issuer's web site when in registration, either directly or indirectly through a hyperlink to a third-party web site, including the web site of a broker-dealer that is participating in the registered offering.

Although our original guidance was directed at communications by reporting issuers when in registration, it also should be observed by non-reporting issuers preparing to offer securities to the public for the first time. A non-reporting issuer that has established a history of ordinary course business communications through its web site should be able to continue to provide business and financial information on its site consistent with our original guidance. A non-reporting issuer preparing for its first registered public offering that contemporaneously establishes a web site, however, may need to apply this guidance more strictly when evaluating its web site content because it may not have established a history of ordinary-course business communications with the

[62] In Securities Act Release No. 7606A (Nov. 13, 1998) [63 FR 67174], we proposed exemptions to address many of the issues in this area. We will continue to consider these proposals as part of a broader regulatory review of restrictions on communications. We also have adopted rules relaxing restrictions on communications in the business combination context. If a registered offering involves a merger or other business combination, new Securities Act Rules 165 and 166, 17 CFR 230.165 and 230.166, enable the parties to the transaction or persons acting on their behalf to communicate information about the transaction and the parties to it outside of the Section 10 prospectus. *See* Securities Act Release No. 7760 (Oct. 22, 1999) [64 FR 61408]. Thus, information relating to a business combination may remain on an issuer's web site provided it is filed in accordance with Securities Act Rule 425, 17 CFR 230.425.

[63] 15 U.S.C. 77e.

[64] Except with respect to business combinations, no offers of any kind may be made before filing a registration statement. Section 5(c) of the Securities Act, 15 U.S.C. 77e(c). During the period between filing and delivery of the final prospectus, written offers and offers transmitted by radio or television must conform to the requirements of Section 10 of the Securities Act. See Sections 2(a)(10) and 5(b) of the Securities Act.

[65] *See* n. 68 below. From a policy standpoint, regulating communications during the offering process can be justified as a reasonable balancing of the incentives that the process creates for participants to stimulate interest in an issuer's securities. During the offering process ''the increased compensation to distributors and the compressed period of the selling effort, as well as the issuer's interest in obtaining funds, set up a situation in which potential conflicts of interest between investors and sellers are enhanced.'' *See Reforming the Securities Act of 1933—A Conceptual Framework, an Address by Linda C. Quinn, Director, Division of Corporation Finance, Securities and Exchange Commission, to the American Bar Association, Section of Business Law, Committee on Federal Regulation of Securities, Fall Meeting,* Nov. 11, 1995, at 6.

[66] *See* Section B.1.a above for a discussion of the effect of an issuer hyperlink to information on a third-party web site for purposes of the anti-fraud provisions of the federal securities laws. We note that the ''safe harbor'' from Section 5 of the Securities Act contained in Securities Act Rule 137, 17 CFR 230.137, that permits broker-dealers not participating in a distribution to publish or distribute research without the research being deemed to be an ''offer'' for purposes of Sections 2(a)(11) of the Securities Act, 15 U.S.C. 77b(a)(11), and the ''safe harbors'' from Section 5 contained in Securities Act Rules 138 and 139, 17 CFR 230.138 and 230.139, that permit broker-dealers to publish or distribute research without the research being deemed to be an ''offer to sell'' or ''offer for sale'' for purposes of Sections 2(a)(10) and 5(c) of the Securities Act, do not extend to permit issuers to publish or distribute the same information. *See* the 1995 Release, n. 11 above, at Ex. 16.

[67] *See*, for example, the information guidelines contained in Securities Act Release No. 5180 (Aug. 16, 1971) [36 FR 16506]; Securities Act Release No. 5009 (Oct. 7, 1969) [34 FR 16870]; Securities Act Release No. 4697 (May 28, 1964) [29 FR 7317]; and Securities Act Release No. 3844 (Oct. 8, 1957) [22 FR 8359].

[68] Limited issuer statements about an offering may be made (electronically or otherwise) before the filing of a registration statement. Securities Act Rule 135, 17 CFR 230.135, permits an issuer to notify the public of a proposed offering of securities during the pre-filing period as long as the contents of the notice do not exceed the items specified in the rule. Securities Act Rule 135c, 17 CFR 230.135c, permits issuers subject to the reporting requirements of the Exchange Act, and certain exempt foreign issuers, to make public announcements of proposed private offerings of securities without any such announcement being deemed an ''offer'' for purposes of Section 5 of Securities Act, as long as it is not used to condition the market and is limited to the factual items specified in the rule. These safe harbors also may be invoked after the filing of a registration statement. Once a registration statement has been filed, an issuer may publish (electronically or otherwise) a brief description of its business and limited additional information on the securities being offered. Securities Act Rule 134, 17 CFR 230.134, permits an issuer to make limited offering communications following the filing of a registration statement as long as the contents of the communications are limited to the items specified in the rule and the other conditions of the rule are met.

Securities Act Rule 135e, 17 CFR 230.135e, permits a foreign private issuer and other offering participants to provide journalists with access to offshore press activities that discuss a present or proposed offering of securities. Rule 135e requires that press-related materials be released only outside the United States and that press conferences be held outside the United States. As a result, we believe that dissemination through the Internet by the issuer or other person covered by Rule 135e of these materials or press conferences will not comply with Rule 135e unless procedures are implemented to assure that only permitted recipients under the rules are able to access the information.

We also have adopted special safe harbor rules for mutual funds, which, unlike typical corporate issuers, continuously offer and sell their shares to the public and, therefore, are continuously subject to the limitations on issuer communications under the Securities Act. Securities Act Rule 482, 17 CFR 230.482, permits a mutual fund to advertise performance and other information about the fund, provided that the advertisement contains only information the substance of which is included in the fund's prospectus. Securities Act Rule 134 contains special provisions for mutual funds, permitting funds to advertise a broad range of information, other than performance information.

marketplace. Thus, its web site content may condition the market for the offering and, due to the unfamiliarity of the marketplace with the issuer or its business, investors may be unable to view the issuer's communications in an appropriate context while the issuer is in registration. In other words, investors may be less able to distinguish offers to sell an issuer's securities in a registered offering from product or service promotional activities or other business or financial information.

C. Online Offerings

1. Online Public Offerings

Increasingly, issuers and broker-dealers are conducting public securities offerings online, using the Internet, electronic mail and other electronic media to solicit prospective investors. Examples of these electronic communications include investor questionnaires on investment qualifications, broker-dealer account-opening procedures and directives on how to submit indications of interest or offers to buy in the context of a specific public offering.[69] These developments present both potential benefits and dangers to investors.[70] On the positive side, numerous ''online brokers'' appear to have begun to give individual investors more access to public offerings, including initial public offerings, or IPOs.[71] Still, dangers accompany these expanded online investment opportunities. Retail investors often are unfamiliar with the public offering process generally, and, in particular, with new marketing practices that have evolved in connection with online public offerings. We are concerned that there may be insufficient information available to investors to enable them to understand fully the online public offering process. We also are concerned that investors are being solicited to make hasty, and perhaps uninformed, investment decisions.[72]

Two fundamental legal principles should guide issuers, underwriters and other offering participants in online public offerings. First, offering participants can neither sell, nor make contracts to sell, a security before effectiveness of the related Securities Act registration statement.[73] A corollary to this principle dictates that ''[n]o offer to buy * * * can be accepted and no part of the purchase price can be received until the registration statement has become effective.'' [74]

Second, until delivery of the final prospectus has been completed, written offers and offers transmitted by radio and television cannot be made outside of a Section 10 prospectus except in connection with business combinations.[75] After filing the registration statement, two limited exceptions provide some flexibility to offering participants to publish notices of the offering.[76] Following effectiveness, offering participants may disseminate sales literature and other writings so long as these materials are accompanied or preceded by a final prospectus.[77] Oral offers, in contrast, are permissible as soon as the registration statement has been filed. Offering participants may use any combination of electronic and more traditional media, such as paper or the telephone, to communicate with prospective investors, provided that use of these media is in compliance with the Securities Act.

These key legal principles must underpin the development of appropriate procedures for online offerings. To date, the Division of Corporation Finance has reviewed numerous procedures in connection with online distributions of IPOs. The Division also has issued a no-action letter regarding permissible procedures for the use of the Internet in IPOs.[78] We understand, however, that a number of online brokers have urged that we make additional regulatory accommodations to facilitate online offerings. We appreciate the benefits that technology brings to the offering process and fully support the need to craft a regulatory system that maximizes these benefits. We also are mindful of our investor protection mandate and the fundamental principles established by the Securities Act for the offer and sale of securities. Many of the procedures urged upon us by online brokers may be properly the subject of regulatory action. Accordingly, in this release, we do not prescribe any specific procedures that must be followed. Instead, we will continue to analyze this area as practice, procedures and technology evolve, with a view to possible regulatory action in the future. Additionally, the Commission staff will continue to review procedures submitted in connection with online offerings.

2. Online Private Offerings under Regulation D

Broad use of the Internet for exempt securities offerings under Regulation D is problematic because of the requirement that these offerings not involve a general solicitation or advertising.[79] When we first considered

[69] See Division of Corporation Finance no-action letter Wit Capital Corporation (July 14, 1999).

[70] We are aware that municipal securities issuers and municipal securities underwriters have begun to evaluate the online offering process and that a limited number of offerings have been conducted over the Internet. At this time, we are not addressing the implications of online municipal securities offerings, but we encourage comment on this topic. We remind municipal securities issuers and other municipal securities market participants, however, of the potential issue that arises if the municipal securities offering also involves an offering of a separate security that is not being sold pursuant to the exemption from registration contained in Section 3(a)(2) of the Securities Act, 15 U.S.C. 77c(a)(2). If the municipal securities offering involves an offering of a separate security that is being sold in reliance on an exemption from registration contained in Section 4(2) of the Securities Act, 15 U.S.C. 77d(2), or Regulation D, 17 CFR 230.501, *et seq.*, or in a registered offering, our discussion in Section C.2 below applies. We, therefore, caution municipal securities offering participants wishing to offer municipal securities online to evaluate carefully whether any separate security is being sold.

[71] *See* Joseph Weber & Peter Elstrom, *Transforming the Art of the Deal,* Bus. Wk., July 26, 1999, at 96; Shawn Tully, *Will the Web Eat Wall Street?,* Fortune, Aug. 2, 1999, at 112.

[72] There also have been numerous reports where investors complained that they did not receive shares in an online IPO. *See* Randall Smith, *So Far, ''E-Underwriting'' Gets a Slow Start,* Wall St. J., Aug. 16, 1999, at C1. *See also* Randall Smith, *Online Brokers to Form Bank in Bid for IPOs,* Wall St. J., Nov. 15, 1999, at C1; Randall Smith & Lee Gomes, *How Get Rich Hopes of Linux Techies Went Up in Flames,* Wall St. J., Aug. 18, 1999, at A1.

[73] Section 5(a) of the Securities Act, 15 U.S.C. 77e(a).

[74] Securities Act Rule 134(d), 17 CFR 230.134(d).

[75] *See* Sections 2(a)(10) and 5(b) of the Securities Act. Section 5(c) of the Securities Act also proscribes both oral and written offers before the filing of a registration statement or while the registration statement is subject to a refusal order, stop order or, before effectiveness, any other public proceeding or examination under Section 8 of the Securities Act, 15 U.S.C. 77h. For a description of the new rules regarding communications in a business combination context, *see* n. 62 above.

Mutual funds are permitted to make written offers before delivery of the final prospectus under Securities Act Rule 482 (permitting advertisements containing only information ''the substance of which'' is included in the fund's prospectus) and Securities Act Rule 498, 17 CFR 230.498 (permitting the use of a ''profile,'' a summary disclosure document). Both Rule 482 advertisements and fund profiles are prospectuses under Section 10(b) of the Securities Act, which permits a prospectus that omits in part or summarizes information to be used to make offers before delivery of the final prospectus.

[76] *See* Securities Act Rules 134 and 135, n. 68 above.

[77] *See* Sections 2(a)(10) and 5(b) of the Securities Act. A confirmation of sale is not deemed a non-conforming prospectus when sent or given after the effective date of a registration statement if a prospectus satisfying the requirements of Section 10(a) of the Securities Act is sent or given before or with the confirmation.

[78] *See Wit Capital Corporation,* n. 69 above.

[79] *See* Rule 502(c) of Regulation D, 17 CFR 230.502(c). General solicitation or advertising is prohibited in offerings under Rules 504, 505 and 506 of Regulation D, 17 CFR 230.504, 230.505 and 230.506. An exception to the prohibition against general solicitation applies to some limited offerings under Rule 504(b)(1), 17 CFR 230.504(b)(1), when an issuer has satisfied state

Continued

whether exempt offerings could be conducted over the Internet, we concluded that an issuer's unrestricted, and therefore publicly available, Internet web site would not be consistent with the restriction on general solicitation and advertising. Specifically, the 1995 Release included an example indicating that an issuer's use of an Internet web site in connection with a purported private offering would constitute a ''general solicitation'' and therefore disqualify the offering as ''private.'' [80]

Subsequently, the Divisions of Corporation Finance and Market Regulation issued interpretive guidance to a registered broker-dealer and its affiliate, IPONET,[81] that planned to invite previously unknown prospective investors to complete a questionnaire posted on the affiliate's Internet web site ''as a means of building a customer base and database of accredited and sophisticated investors'' for the broker-dealer.[82] A password-restricted web page permitting access to private offerings would become available to a prospective investor only after the affiliated broker-dealer determined that the investor was ''accredited'' or ''sophisticated'' within the meaning of Regulation D.[83] Additionally, a prospective investor could purchase securities only in offerings that were posted on the restricted web site *after* the investor had been qualified by the affiliated broker-dealer as an accredited or sophisticated investor and had opened an account with the broker-dealer. The Divisions' interpretive letter was based on an important and well-known principle established over a decade ago: a general solicitation is not present when there is a pre-existing, substantive relationship between an issuer, or its broker-dealer, and the offerees.[84]

We understand that some entities have engaged in practices that deviate substantially from the facts in the *IPONET* interpretive letter. Specifically, third-party service providers who are neither registered broker-dealers nor affiliated with registered broker-dealers have established web sites that generally invite prospective investors to qualify as accredited or sophisticated as a prelude to participation, on an access-restricted basis, in limited or private offerings transmitted on those web sites. Moreover, some non-broker-dealer web site operators are not even requiring prospective investors to complete questionnaires providing information needed to form a reasonable belief regarding their accreditation or sophistication. Instead, these web sites permit interested persons to certify themselves as accredited or sophisticated merely by checking a box. These web sites, particularly those allowing for self-accreditation, raise significant concerns as to whether the offerings that they facilitate involve general solicitations.[85] In these instances, one method of ensuring that a general solicitation is not involved is to establish the existence of a ''pre-existing, substantive relationship.'' [86] Generally, staff interpretations of whether a ''pre-existing, substantive relationship'' exists have been limited to procedures established by broker-dealers in connection with their customers. This is because traditional broker-dealer relationships require that a broker-dealer deal fairly with, and make suitable recommendations to, customers, and, thus, implies that a substantive relationship exists between the broker-dealer and its customers. We have long stated, however, that the presence or absence of a general solicitation is always dependent on the facts and circumstances of each particular case.[87] Thus, there may be facts and circumstances in which a third party, other than a registered broker-dealer, could establish a ''pre-existing, substantive relationship'' sufficient to avoid a ''general solicitation.'' [88]

Notwithstanding the analysis for purposes of Section 5 of the Securities Act, web site operators need to consider whether the activities that they are undertaking require them to register as broker-dealers. Section 15 of the Exchange Act [89] essentially makes it unlawful for a broker or dealer ''to effect any transactions in, or to induce or attempt to induce the purchase or sale of, any security (other than an exempted security or commercial paper, bankers' acceptances, or commercial bills)'' unless the broker or dealer is registered with the Commission.[90] The ''exempted securities'' for which broker-dealer registration is not required under Section 15 are strictly limited.[91] They do *not* include, for example, securities issued under Regulations A, D or S [92] or privately placed securities that would be ''restricted'' securities under

securities laws of specified types. See Securities Act Release No. 7644 (Feb. 25, 1999) [64 FR 11090]. The discussion in this section presumably also would apply to private offerings conducted in reliance on the exemption from registration contained in Section 4(2) of the Securities Act.

[80] *See* the 1995 Release, n. 11 above, at Ex. 20.

Municipal securities issuers and other municipal securities market participants conducting online offerings are directed to our discussion in n. 70 above of the issue that arises if the municipal securities offering also involves an offering of a separate security that is not being sold pursuant to the exemption from registration contained in Section 3(a)(2) of the Securities Act.

[81] Divisions of Corporation Finance and Market Regulation interpretive letter *IPONET* (July 26, 1996).

[82] *Id.*

[83] *See* Rules 501(a) and 506(b)(2)(ii) of Regulation D, 17 CFR 230.501(a) and 230.506(b)(2)(ii).

[84] *See* Division of Corporation Finance interpretive letters *Woodtrails-Seattle, Ltd.* (Aug. 9, 1982) (providing that no general solicitation exists when an issuer or any person acting on its behalf made offers to investors in prior limited partnerships sponsored by the general partner of the issuer); *E.F. Hutton Co.* (Dec. 3, 1985) (providing that no general solicitation exists when an offer is made to customers of a broker-dealer because of the broker's pre-existing, substantive relationship with its customers; further, providing that the requisite relationship could be established through a questionnaire providing the broker-dealer with sufficient information to evaluate the offeree's sophistication and financial situation). *See also* Division of Corporation Finance interpretive letters *H.B. Shaine & Co., Inc.* (May 1, 1987); *Bateman Eichler, Hill Richards, Inc.* (Dec. 3, 1985).

[85] These web sites would also call into question the ability of an issuer to form a reasonable belief, before sale, as to the qualification of the purchaser, which may be necessary depending on the nature of the exemption. *See,* for example, Rule 506(b)(2)(ii) of Regulation D. *See also* Section 3(c)(7) of the Investment Company Act, 15 U.S.C. 80a–3(c)(7).

[86] *See* Securities Act Release No. 6825 (Mar. 15, 1989) [54 FR 11369] at n. 12 (''the staff has never suggested, and it is not the case, that prior relationship is the only way to show the absence of a general solicitation'').

[87] *Id.*

[88] We encourage web site operators offering these services to work with the Commission staff to resolve any securities law issues raised by their activities. We understand that securities lawyers may have interpreted staff responses to Lamp Technologies, Inc. as extending the ''pre-existing, substantive relationship'' doctrine to solicitations conducted by third parties other than a registered broker-dealer. *See* Divisions of Investment Management and Corporation Finance no-action letters *Lamp Technologies, Inc.* (May 29, 1998) and *Lamp Technologies, Inc.* (May 29, 1997). We disagree. In the *Lamp Technologies* no-action letters, the staff of the Divisions of Investment Management and Corporation Finance recognized a separate means to satisfy the ''no general solicitation'' requirement solely in the context of offerings by private hedge funds that are excluded from regulation as investment companies pursuant to Sections 3(c)(1) and 3(c)(7) of the Investment Company Act, 15 U.S.C. 80a–3(c)(1) and 80a–3(c)(7).

[89] 15 U.S.C. 78o.

[90] *See* Section 15(a)(1) of the Exchange Act, 15 U.S.C. 78o(a)(1).

[91] See Section 3(a)(12) of the Exchange Act, 15 U.S.C. 78c(a)(12). These ''exempted securities'' include instruments such as interests or participations in any common trust fund or similar fund maintained by a bank, or certain interests or participations in a single or collective trust fund or securities arising out of a contract issued by an insurance company issued in connection with qualified plans (*see* Section 3(a)(12)(A)(iii) and (iv) of the Exchange Act, 15 U.S.C. §§ 78c(a)(12)(A)(iii) and (iv)), as well as mortgage securities (*see* Exchange Act Rule 3a12–4, 17 CFR 240.3a12–4) and certain designated foreign government securities (see Exchange Act Rule 3a12–8, 17 CFR 240.3a12–8).

[92] 17 CFR 230.251, *et seq.*, 230.501, *et seq.* and 230.901, *et seq.*

Securities Act Rule 144.[93] Thus, broker-dealer registration generally is required to effect transactions in securities that are exempt from registration under the Securities Act.[94] In other words, third-party service providers that act as brokers in connection with securities offerings are required to register as broker-dealers, even when the securities are exempt from registration under the Securities Act.[95]

3. Broker-Dealer Capacity

We have noted before that broker-dealers must have adequate facilities and personnel to promptly execute and consummate all of their securities transactions.[96] As broker-dealers increasingly rely on electronic facilities, such as electronic mail and Internet web sites, to handle communications and transactions with their customers, they must have the facilities to handle the expected user volume.[97] Broker-dealers should consider taking steps to maintain their operational capability during high-volume usage (such as when investors transmit electronic indications of interest to purchase securities in online IPOs), and high-volume and high-volatility trading days (such as the immediate aftermarket trading following an IPO).[98]

D. Technology Concepts

Each technological advance brings changes to the structure of the capital markets and the securities industry. While we believe that the guidance provided in this release will be useful in the near term, we also recognize that we will need to reexamine our regulatory system and interpretive guidance as technology evolves. We will continue to examine and consider the removal of regulations that pose unnecessary barriers to electronic commerce and maintain those regulations that are essential to protect investors. In that regard, we request comment below on specific issues that may arise in the future in several areas. We also solicit comment on whether there are issues involving electronic media under the federal securities laws that we have not identified.

1. Access Equals Delivery

Various commentators have suggested that additional regulatory changes may be warranted in the use of electronic media for delivery purposes. The 1995 Release stated that issuers and market intermediaries with delivery obligations would need to continue to make information available in paper form until such time as electronic media became more universally accessible and accepted.[99] Some believe that this time has come and, therefore, that we should shift from the present delivery model to an ''access-equals-delivery'' model. Under the latter model, investors would be assumed to have access to the Internet, thereby allowing delivery to be accomplished solely by an issuer posting a document on the issuer's or a third-party's web site.

We believe that the time for an ''access-equals-delivery'' model has not arrived yet. Internet access is more prevalent than in 1995, but many people in this country still do not enjoy the benefits of ready access to electronic media.[100] Moreover, even investors who are online are unlikely to rely on the Internet as their sole means of obtaining information from issuers or intermediaries with delivery obligations.[101] Some investors decline electronic delivery because they do not wish to review a large document on their computer screens. Others decline electronic delivery because of the time that it takes to download and print a document.

We request comment, however, as to whether there are circumstances in which, consistent with investor protection, an ''access-equals-delivery'' model might be appropriate. How many U.S. households currently have Internet access? Is there data supporting the conclusion that most investors have access to the Internet? Similarly, is there data supporting the belief that investors who are online will rely on the Internet as their sole means of obtaining information from issuers or intermediaries? Assuming that this data exists, how will investors know when disclosure information has been posted on an issuer's web site? If we were to adopt an ''access-equals-delivery'' model, would we be creating a system that requires ownership of a late-model, sophisticated computer to participate in the securities markets?

We also request comment on whether the disadvantages of electronic delivery, such as lengthy downloading time and system capacity limitations, are likely to be reduced or eliminated in the near future. Also, will documents delivered online be more readable in the future?

2. Electronic Notice

The 1995 and 1996 Releases stated that notice of the availability of electronically delivered disclosure documents must be delivered directly to each investor. The 1995 Release further stated that notice on an Internet web site and otherwise by publication in a newspaper is insufficient to alert a consenting investor of the availability on a web site of a disclosure document.[102]

We continue to believe that direct notice of the availability of electronic disclosure documents is necessary unless an issuer or market intermediary can otherwise establish that delivery has

[93] 17 CFR 230.144. The term ''exempted securities'' for broker-dealer registration purposes under the Exchange Act also does not include securities issued by religious, educational or charitable organizations that are exempt from registration under Section 3(a)(4) of the Securities Act, 15 U.S.C. 77c(a)(4), or securities that are exempted from registration by means of one of the transactional exemptions found in Section 4 of the Securities Act, 15 U.S.C. 77d.

[94] *See* the *IPONET* interpretive letter, n. 81 above. The Division of Market Regulation's response in this interpretive letter required that a registered broker-dealer maintain overall supervision of IPONET's activities; otherwise, IPONET would have been required to registered as a broker-dealer under Section 15(a) of the Exchange Act. The Commission requests the Division of Market Regulation to consider whether the activities of a web site operator, such as described in the no-action letters to *Lamp Technologies, Inc., see* n. 88 above, require the web site operator to register with the Commission as a broker-dealer.

[95] Staff guidance is available regarding whether a person is a broker-dealer subject to registration with the Commission. Questions on this subject should be addressed to the Office of Chief Counsel, Division of Market Regulation, Securities and Exchange Commission, 450 Fifth Street, N.W., Washington, D.C. 20549–1001, (202) 942–0073.

[96] *See* Exchange Act Release No. 8363 (July 29, 1968) [33 FR 11150]. *See also* Exchange Act Release No. 15194 (Sept. 28, 1978) [43 FR 46397]; Exchange Act Release No. 6778 (Apr. 16, 1962) [27 FR 3991].

[97] See In the Matter of Lowell H. Listrom, 50 SEC 883, 887 n. 7 (1992).

[98] *See* Division of Market Regulation Staff Legal Bulletin No. 8 (Sept. 9, 1998), available on our Internet web site at <http://www.sec.gov/rules/othern/slbmr8.htm>.

[99] *See* the 1995 Release, n. 11 above, at n. 16 and the accompanying text.

[100] *See,* for example, Richard S. Dunham, *Across America, A Troubling ''Digital Divide,''* Bus. Wk., Aug. 2, 1999, at 40; Michelle Singletary, *''Digital Divide'' Isn't Just about Internet Access,* The Wash. Post, Aug. 22, 1999, at H–1.

[101] *See* Andy Serwer, *A Nation of Traders,* Fortune, Oct. 11, 1999, at 116, 120 (quoting Charles Schwab CEO David S. Pottruck as saying ''[c]ustomers want a variety of [information] distribution channels * * * face to face, the mail, the telephone and the Web.'''). Additionally, the National Association of Securities Dealers, Inc. has recognized that the Internet is not sufficient to serve as the sole means of disseminating material corporate information. In January 1999, we issued an order granting approval of a rule change by the NASD that stipulated that the Internet may not be a substitute for the dissemination of corporate news to security holders through traditional news services. *See* Exchange Act Release No. 40988 (Jan. 28, 1999) [64 FR 5331]. In that release, we explained that ''[w]hile Nasdaq believes that it is generally in the public interest to encourage widespread dissemination of information to investors through the Internet, it also believes that it must maintain a level playing field for all investors, including those who do not have Internet access or who may not generally rely on the Internet as their primary source of material corporate news.''

[102] *See* the 1995 Release, n. 11 above, at Ex. 24.

been made. For example, a broker-dealer cannot meet its confirmation obligation under Exchange Act Rule 10b–10 [103] by simply placing a notice on its web site that a customer must ''pull'' down to access. Rather, a Rule 10b–10 confirmation must be sent directly to the broker-dealer's customer. Additionally, messages posted to an investor's account at his or her broker-dealer's web site regarding the availability of electronic disclosure documents are insufficient, unless they are promptly forwarded directly to the investor. We request comment, however, as to whether changes in the sophistication and expectations of Internet users as well as advances in Internet technology warrant re-evaluation of our position on whether account messages on an Internet web site provide sufficient notice. Were we to adopt such an approach, would it result in shifting the burden from issuers to notify security holders of the availability of electronic disclosure documents to security holders to search for material information? Would a burden shift be consistent with our investor protection mandate?

3. Implied Consent

In lieu of ''access-equals-delivery,'' some commentators have argued for changes to our electronic delivery scheme, particularly with respect to investor consent to electronic delivery. We understand that obtaining investor consent poses the most significant barrier to the use of electronic delivery by issuers and market intermediaries.[104] Some have suggested that electronic delivery would be more common if issuers and intermediaries with delivery obligations were permitted to use a form of implied consent to evidence satisfaction of delivery. Under an implied consent model, an issuer could rely on electronic delivery if investors do not affirmatively object when notified of the issuer's or intermediary's intention to deliver documents in an electronic format. Proponents of implied consent argue that the difficulties in obtaining investors' consents to electronic delivery result not from the unwillingness of investors to use an electronic medium, but rather from investors' inattention to requests for affirmative consent.

We are concerned that investors would be significantly and adversely affected by implied consent through their inadvertent failure to object. We understand that in many circumstances investors are not inattentive to requests for consent to electronic delivery, but rather, purposely do not consent.[105] Thus, we generally believe that it would not be appropriate for issuers or intermediaries to rely on implied consent.[106] We request comment, however, as to whether there are particular circumstances under which an implied consent model would be appropriate.[107] For example, would it be appropriate where investors previously have provided an electronic mail address to an issuer or intermediary and have indicated that electronic mail is one of their methods of communication for investing purposes? How would the fact that investors sometimes change their electronic mail addresses affect an implied consent model?

4. Electronic-Only Offerings

The 1995 Release stated that, as a matter of policy, issuers and market intermediaries with delivery obligations would need to continue to deliver paper copies of documents that are required to be delivered until such time as electronic media becomes more universally accessible and accepted.[108] This policy, however, does not preclude ''electronic-only'' offerings. In an ''electronic-only'' offering, investors are permitted to participate only if they agree to accept electronic delivery of all documents in connection with the offering. The 1995 Release provided that an issuer could structure its offering as one that would be effected entirely through electronic media.[109] Even in these offerings, however, an issuer or intermediary must provide the required documents in paper form if an investor revokes his or her consent before valid delivery is made. Additionally, the 1995 and 1996 Releases both provided that a paper copy of information previously delivered electronically should be delivered whenever an investor so requests, even when the revocation is made after electronic delivery or there has been no revocation at all.[110]

Should the paper back-up system be required for offerings where participation is conditioned upon consent to electronic-only delivery? [111] If not, would there be any adverse effects? Would we be creating a two-tiered system with access to some offerings available only to investors with Internet access? Should an issuer be permitted to require investors to pay for paper delivery when they have consented to electronic-only delivery? If the paper back-up system were no longer required, how should investors be advised of any payment requirement and any attendant risks? In the event of technical difficulties, how would issuers and intermediaries comply with their delivery obligations, other than by providing paper delivery? Should there be an exception to paper delivery where technological difficulties would prevent electronic delivery in a timely manner? What disclosures should be included in the notice to investors? If the paper back-up system were no longer required generally, are there any particular types of offerings, such as dividend reinvestment and direct stock purchase plans, or DRSPPs, where the paper back-up system should be retained?

If the paper back-up system were no longer required for public offerings, how would issuers meet their prospectus delivery requirements for secondary market trading? [112] Should an issuer be permitted to condition participation in offerings upon consent to electronic delivery of all required Exchange Act

[103] 17 CFR 240.10b–10.

[104] *See* Alexander C. Gavis & Scott Maylander, *Mutual Funds and Electronic Delivery: Promise Versus Reality,* wallstreetlawyer.com, Feb. 1999, at 1.

[105] For a discussion of the impediments to electronic delivery, *see* n. 101 above and the accompanying text.

[106] We set forth alternative procedures in the 1995 Release enabling an issuer to satisfy the evidence-of-delivery element without obtaining informed consent, but only where there is some other indication that the document was in fact received. *See* the 1995 Release, n. 11 above. None of these procedures, however, permits an issuer or intermediary with delivery obligations to assume consent based upon an investor's inaction. In contrast, the 1996 Release provided that an issuer could presume consent to electronic delivery by employee-security holders who use the electronic mail system ''in the ordinary course of performing their duties and ordinarily are expected to log-on to electronic mail routinely to receive mail and communications.'' *See* the 1996 Release, n. 15 above, Ex. 1. This interpretation still stands, but we do not extend it to other situations.

[107] We recently adopted rules that allow issuers and broker-dealers to rely on implied consent to ''householding'' of prospectuses and security holder reports; that is, delivery of a single prospectus or report to two or more investors that are members of the same family and share the same residential address. *See* Securities Act Release No. 7766 (Nov. 4, 1999) [64 FR 62540]. Under these rules, consent to householding can be implied only if adequate advance notice is given to the investors and they do not object. Due to concerns expressed by commentators, our rules permit householding to a shared electronic address only if the investors consent in writing. *Id.* We have proposed similar rules for delivery of proxy and information statements to households. *See* Securities Act Release No. 7767 (Nov. 4, 1999) [64 FR 62548].

[108] *See* the 1995 Release, n. 11 above, at n. 16 and the accompanying text.

[109] *Id.* at n. 27. Companies conducting public offerings must consider prospectus delivery requirements for secondary market trading under Securities Act Rule 174, 17 CFR 230.174. *Id.*

[110] *See* the 1995 Release, n. 11 above, at n. 27 and the accompanying text and the 1996 Release, n. 15 above, at n. 17 and the accompanying text.

[111] This could arise either when an issuer is conducting an electronic-only offering, or when an issuer is conducting a traditional offering, but certain members of the underwriting syndicate that are online brokers offer only electronic delivery.

[112] *See* Securities Act Rule 174.

reports? If not, should an issuer be required to obtain a separate consent from security holders in the newly public issuer in order to permit electronic-only delivery of required Exchange Act reports?

For a mutual fund, would there be any potential adverse effects of limiting electronic-only offerings to investors who provide an irrevocable consent to electronic delivery of all future disclosure documents, including shareholder reports, proxy solicitation materials and prospectuses provided in connection with the purchase of additional fund shares?

5. Access to Historical Information

One of the unique characteristics of the Internet is the continuous availability of information once it is posted on a web site. For example, a press release disseminated over a wire service or through other customary means is considered to have been ''issued'' once, and thereafter is not recirculated to the marketplace. The same press release posted on an issuer's web site potentially has a longer life because it provides a record that can be accessed by investors at any time and upon which investors potentially could rely when making an investment decision without independent verification. In effect, a statement may be considered to be ''republished'' each time that it is accessed by an investor or, for that matter, each day that it appears on the web site.

Commentators have suggested that if a statement is deemed to be republished, it may potentially give rise to liability under Section 10(b) of the Exchange Act and Rule 10b–5.[113] We request comment on how to facilitate the availability of historical information on the Internet consistent with the federal securities laws. Additionally, how can technology help minimize investor confusion while providing for the accessibility of potentially useful information?

6. Communications When in Registration

Although we believe that our long-standing guidance on permissible communications is adequate to address many of the questions applicable to an issuer's web site content when in registration, we recognize that the Internet has spawned new types of businesses that do not easily fit within the existing disclosure framework. For example, many issuers not only use their web sites to conduct business through the Internet, their web sites *are* their businesses. In this instance, when an issuer is in registration, how should the issuer segregate its business activities from its offering activities? In other words, how can an issuer comply with its obligations under Section 5 of the Securities Act while maintaining communications to the marketplace related solely to its legitimate business activities?

Are there special considerations for mutual funds because they continuously offer and sell their shares to the public and, therefore, always maintain effective registration statements? For a mutual fund that continuously offers its shares, what, if any, facts and circumstances should overcome the strong inference[114] that hyperlinked information on a third-party web site that meets the definition of an ''offer to sell,'' ''offer for sale'' or ''offer'' under Section 2(a)(3) of the Securities Act is attributable to an issuer for purposes of anti-fraud liability?

7. Internet Discussion Forums

Another distinguishing characteristic of the Internet is its facility for interactive discussion. This discussion can, and does, cover virtually any subject, including issuers and their securities. In the corporate context, at least three different means of Internet ''discussions'' have evolved. First, many web sites offer moderated discussion forums, typically led by a real-time moderator and featuring a guest ''expert.'' Other web sites contain ''bulletin boards,'' cyberspace message centers where comments concerning issuers, securities or industries can be posted and saved for viewing over an extended period of time. Finally, numerous web sites host discussion groups, or ''chat rooms,'' with real-time postings and viewing by participants on a wide variety of topics.

These discussion forums present unique and often difficult problems for issuers.[115] We request comment on any issues relating to Internet discussion forums. In particular, what effect, if any, do discussion group communications have on an issuer's stock price? In addition, should issuers or broker-dealers that host online discussion forums adopt and maintain ''best practices'' for participation in these forums? If so, who should establish these best practices, and what should be included in them?

Another area of significant concern involves the use of Internet discussion forums by an issuer's employees. Are issuers currently using specific procedures covering the use of electronic forms of communications by their employees? If so, what are these ''best practices''?

E. Examples

A series of examples is provided below to illustrate various applications of the interpretations outlined in this release and to provide guidance in applying them to specific facts and circumstances. We note, however, that these examples are non-exclusive methods of ways to comply with the above interpretations. Additionally, the analysis required to determine compliance with the federal securities laws is fact-specific, and any different or additional facts might require a different conclusion. We request comment on whether other examples might be appropriate for publication.

(1) Investor John Doe gives XYZ Delivery Service his informed consent over the telephone using automated touch tone instructions (after accessing the service using a personal identification number).[116] The automated instructions informed John Doe of the manner, costs and risks of electronic delivery. The consent related to electronic delivery of documents. Before delivering any electronic documents to Investor John Doe, XYZ Delivery Service sends Investor John Doe a letter confirming that he had consented to electronic delivery.

The confirming letter sent by XYZ Delivery Service provides assurance that John Doe consented to the same extent as if he had provided a written or electronic consent. Thus, XYZ Delivery Service's procedures would evidence satisfaction of delivery. We also note that XYZ Delivery Service has reason to be assured of the authenticity of John Doe's telephonic consent because of his use of a personal identification number.

(2) In speaking with Broker DEF over the telephone, Investor Jane Doe (a long-term customer of Broker DEF) consents to electronic delivery to all future documents of Company XYZ on Company XYZ's Internet web site. Broker DEF agrees to notify Jane Doe by electronic mail (or other acceptable means of notification) that Company XYZ has posted the documents on its

[113] *See,* for example, Mary Lou Peters, *Avoiding Securities Law Liability for a Company's Web Site,* Insights, April 1999, at 16; Steven E. Bochner & Anita S. Presser, *Corporate Disclosure in the Electronic Age: The Web Site—Opportunities and Pitfalls,* wallstreetlawyer.com, Apr. 1998, at 1.

[114] *See* n. 66 above and the accompanying text.

[115] *See* the Unger Report, n. 2 above, at 75.

[116] This example and Example 2 represent alternative ways of recording a telephonic consent. These examples are not the only ways to comply with the interpretation.

web site when the posting occurs. Before obtaining Jane Doe's consent, Broker DEF advises Jane Doe that she may incur certain costs associated with delivery in this manner (for example, online time and printing) and possible risks (for example, system outages). Broker DEF also advises Jane Doe that the term of the consent is indefinite but that the consent can be revoked at any time. Broker DEF maintains a signed and dated memorandum in its files regarding the details of the conversation.

In this situation, Jane Doe's consent would be informed regarding the manner, costs and risks of electronic delivery. We also note that Broker DEF has reason to be assured of the authenticity of Jane Doe's telephonic consent because Jane Doe is well known to Broker DEF.

(3) In seeking a global consent to electronic delivery from Investor John Doe, Broker DEF specifies that the electronic media that may be used to deliver documents will be CD–ROM, an Internet web site, electronic mail or facsimile transmission, and further advises John Doe that if he does not have access to all of these media he should not consent to electronic delivery. John Doe consents to electronic delivery from Broker DEF.

In this situation, John Doe's consent would be informed regarding the manner of electronic delivery. The consent need not specify which form of media a specific issuer may use.

(4) Investor Jane Doe consents to delivery via a third-party delivery service's Internet web site of all future documents of Company ABC, Company XYZ and any additional companies in which she invests in the future. Jane Doe subsequently purchases securities of Company DEF. Thereafter, Company XYZ and Company DEF post their final prospectuses on the third-party web site and notify Jane Doe by electronic mail (or other acceptable means of notification) of the availability of the prospectuses. Company ABC does not post its prospectus on the third-party web site but delivers a CD–ROM version of its prospectus.

Company XYZ has satisfied its delivery obligations. Additionally, although not specifically identified in the consent, Company DEF has satisfied its delivery obligations because the consent covered delivery by companies added at a later date. Absent other factors indicating that Jane Doe actually accessed Company ABC's CD–ROM prospectus, however, Company ABC's procedure would not satisfy its delivery obligations because Jane Doe consented to delivery only by an Internet web site. If consent is to be relied upon, the consent must cover the specific electronic medium or media that may be used for delivery.

(5) Investor John Doe consents to delivery of all future documents of Company XYZ electronically via Company XYZ's Internet web site, including documents delivered in PDF. The form of consent advises John Doe of the system requirements necessary for receipt of documents in PDF and cautions that downloading time may be slow. Company XYZ places its proxy soliciting materials and annual report to security holders in PDF on its Internet web site, with a hyperlink on the same screen enabling users to download a free copy of Adobe Acrobat (software permitting PDF viewing) and a toll-free telephone number that investors can use to contact someone during Company XYZ's business hours for technical assistance or to request a paper copy of a document.

Company XYZ has satisfied its delivery obligations. Under these circumstances, John Doe can effectively access the information provided.

(6) Company XYZ, which is engaged in a public offering of its securities, places its preliminary prospectus on its Internet web site. In the Business section of the prospectus, Company XYZ has placed a hyperlink to a report by a marketing research firm located on a third-party web site regarding Company XYZ's industry.

Because the hyperlink is embedded within the prospectus, the report becomes a part of the prospectus and must be filed with the Commission. In addition, Company XYZ must obtain a written consent from the person preparing the report in accordance with Securities Act Rule 436, 17 CFR 230.436. This consent also must be filed with the Commission. Moreover, the report will be subject to liability under Section 11 of the Securities Act, as well as other anti-fraud provisions of the federal securities laws.

(7) Company XYZ, which is engaged in a public offering of its securities, places its preliminary prospectus on its Internet web site. Each of the topics in the Table of Contents is a hyperlink, allowing investors to pick a topic and immediately be hyperlinked to the section in the prospectus relating to that topic.

The hyperlinks present no federal securities law issues. The hyperlinks do no more than allow investors to turn electronically to a specific page in the prospectus.

(8) Company XYZ, which is engaged in a public offering of its securities, places its preliminary prospectus on its Internet web site. Immediately following the button for the prospectus on the web site, Company XYZ offers investors the ability to download its financial statements in spreadsheet format. This financial information is not modified in any way from that contained in the filed document.

The provision of financial statements in spreadsheet format would be permissible when the download results only in a mere difference in format without any difference in text. The completeness of the financial statements must not be compromised by any difference in the electronic version from the paper version.

III. Solicitation of Comment

We invite anyone who is interested to submit written comments on this release. We request comment not only on the specific issues discussed in this release, but also on any other approaches or issues involved in facilitating the use of electronic media to further the disclosure purposes of the federal securities laws. We request comment from the point of view of both parties providing the disclosure, such as issuers and those acting on behalf of issuers, and parties receiving and using the disclosure, such as investors and security holders.

List of Subjects in 17 CFR Parts 231, 241 and 271

Securities.

Amendment of the Code of Federal Regulations

For the reasons set out in the preamble, Title 17 Chapter II of the Code of Federal Regulations is amended as set forth below:

PART 231—INTERPRETATIVE RELEASES RELATING TO THE SECURITIES ACT OF 1933 AND GENERAL RULES AND REGULATIONS THEREUNDER

1. Part 231 is amended by adding Release No. 33–7856 and the release date of April 28, 2000, to the list of interpretive releases.

PART 241—INTERPRETATIVE RELEASES RELATING TO THE SECURITIES EXCHANGE ACT OF 1934 AND GENERAL RULES AND REGULATIONS THEREUNDER

2. Part 241 is amended by adding Release No. 34–42728 and the release date of April 28, 2000, to the list of interpretive releases.

PART 271—INTERPRETATIVE RELEASES RELATING TO THE INVESTMENT COMPANY ACT OF 1940 AND GENERAL RULES AND REGULATIONS THEREUNDER

3. Part 271 is amended by adding Release No. IC–24426 and the release date of April 28, 2000, to the list of interpretive releases.

Dated: April 28, 2000.

By the Commission.

Jonathan G. Katz,

Secretary.

[FR Doc. 00–11079 Filed 5–3–00; 8:45 am]

BILLING CODE 8010–01–P

ENVIRONMENTAL PROTECTION AGENCY

40 CFR Part 180

[OPP–300913A; FRL–6556–3]

RIN 2070–AB78

Cyromazine; Pesticide Tolerance

AGENCY: Environmental Protection Agency (EPA).

ACTION: Final rule.

SUMMARY: This final rule establishes permanent tolerances for residues of cyromazine (CAS No. 66215–27–8) in or on mango at 0.3 parts per million (ppm); onion, green at 2.0 ppm; onions, dry bulb at 0.1 ppm; potato at 0.8 ppm; corn, sweet, (kernels plus cob with husks removed) at 0.5 ppm; corn, sweet, forage at 0.5 ppm; corn, sweet, stover at 0.5 ppm; radishes, root at 0.5 ppm; radishes, tops at 0.5 ppm; lima beans at 1.0 ppm; cotton, undelinted seed at 0.1 ppm; milk at 0.05 ppm; and meat, fat and meat byproducts (of cattle, goat, hogs, horses and sheep) at 0.05 ppm. This final rule also removes melamine, a metabolite of cyromazine from the tolerance expression since it is no longer considered a residue of concern. The Interregional Research Project (IR–4) and Novartis Crop Protection, Inc. requested these tolerances under the Federal Food, Drug, and Cosmetic Act, as amended by the Food Quality Protection Act of 1996.

DATES: This regulation is effective May 4, 2000. Objections and requests for hearings, identified by docket control number OPP–300913A, must be received by EPA on or before July 3, 2000.

ADDRESSES: Written objections and hearing requests may be submitted by mail, in person, or by courier. Please follow the detailed instructions for each method as provided in Unit VI. of the **SUPPLEMENTARY INFORMATION.** To ensure proper receipt by EPA, your objections and hearing requests must identify docket control number OPP–300913A in the subject line on the first page of your response.

FOR FURTHER INFORMATION CONTACT: By mail: Linda DeLuise, Registration Division (7505C), Office of Pesticide Programs, Environmental Protection Agency, Ariel Rios Bldg., 1200 Pennsylvania Ave., NW., Washington, DC 20460; telephone number: (703) 305–5428; e-mail address: deluise.linda@epa.gov.

SUPPLEMENTARY INFORMATION:

I. General Information

A. Does this Action Apply to Me?

You may be affected by this action if you are an agricultural producer, food manufacturer, or pesticide manufacturer. Potentially affected categories and entities may include, but are not limited to:

Categories	NAICS codes	Examples of potentially affected entities
Industry	111	Crop production
	112	Animal production
	311	Food manufacturing
	32532	Pesticide manufacturing

This listing is not intended to be exhaustive, but rather provides a guide for readers regarding entities likely to be affected by this action. Other types of entities not listed in the table could also be affected. The North American Industrial Classification System (NAICS) codes have been provided to assist you and others in determining whether or not this action might apply to certain entities. If you have questions regarding the applicability of this action to a particular entity, consult the person listed under **FOR FURTHER INFORMATION CONTACT**.

B. How Can I Get Additional Information, Including Copies of this Document and Other Related Documents?

1. *Electronically.* You may obtain electronic copies of this document, and certain other related documents that might be available electronically, from the EPA Internet Home Page at http://www.epa.gov/. To access this document, on the Home Page select ''Laws and Regulations'' and then look up the entry for this document under the ''**Federal Register**—Environmental Documents.'' You can also go directly to the **Federal Register** listings at http://www.epa.gov/fedrgstr/.

2. *In person.* The Agency has established an official record for this action under docket control number OPP–300913A. The official record consists of the documents specifically referenced in this action, and other information related to this action, including any information claimed as Confidential Business Information (CBI). This official record includes the documents that are physically located in the docket, as well as the documents that are referenced in those documents. The public version of the official record does not include any information claimed as CBI. The public version of the official record, which includes printed, paper versions of any electronic comments submitted during an applicable comment period is available for inspection in the Public Information and Records Integrity Branch (PIRIB), Rm. 119, Crystal Mall #2, 1921 Jefferson Davis Hwy., Arlington, VA, from 8:30 a.m. to 4 p.m., Monday through Friday, excluding legal holidays. The PIRIB telephone number is (703) 305–5805.

II. Background and Statutory Findings

In the **Federal Register** of September 15, 1999 (64 FR 50043) (FRL–6098–7), EPA issued a proposed rule which announced that Novartis Crop Protection, Inc., 410 Swing Road, Greensboro, NC 27419 and the Interregional Research Project (IR-4) had submitted pesticide petitions (PP) 5E4450, 5F4574, 6F4613, 5F4546, 6F3332, and 7E4905 pursuant to section 408 of the Federal Food, Drug, and Cosmetic Act (FFDCA), 21 U.S.C. 346a as amended by the Food Quality Protection Act of 1996 (FQPA) (Public Law 104–170) proposing that 40 CFR part 180 be amended by establishing a tolerance for cyromazine in or on mango at 0.3 parts per million (ppm); onion, green at 2.0 ppm; onions, dry bulb at 0.1 ppm; potato at 0.8 ppm; corn, sweet, (kernels plus cob with husks removed) at 0.5 ppm; corn, sweet, forage at 0.5 ppm; corn, sweet, stover at 0.5 ppm; radishes, root at 0.5 ppm; radishes, tops at 0.5 ppm; lima beans at 1.0 ppm; cotton, undelinted seed at 0.1 ppm; milk at 0.05 ppm; and meat, fat and meat byproducts (of cattle, goat, hogs, horses and sheep) at 0.05 ppm. EPA received one comment from a private citizen of Australia alleging that the poor health of a dog was due to cyromazine and stating that long-term implications and studies

had not been addressed in this petition. In particular the citizen stated:

1. On 14 September 1999, an Adverse Reaction Experience Report was submitted to the National Registration Authority in Australia on the use and subsequent ill-health of a dog after long-term ingestion of cyromazine available in Australia as an oral flea control. Period was some 4-5 years at 300 mg/day for 27 kg dog. The dog's kidneys and liver were enlarged and her immune system dysfunctional. The cyromazine was immediately stopped at a veterinarian's request and the dog's organs continually become less inflamed. The flea control tablet was withdrawn from the market some 2 or 3 years ago, due to fatalities in a number of animals due to liver failure. The product was subsequently re-released with warning that only dogs which had shown no reaction to the ''Decaflea'' could use it.

2. If a factor of 10 or 100 is used from animal reaction to allowable human exposure, how does very short-term fatal liver dysfunction in dogs equate to long-term ingestion by humans, especially infants and children. How does this equate to humans who already have liver and kidney disease/dysfunction?

3. Please refer to the following publications available through PubMed at http://www.ncbi.nlm.nih.gov: ''Feeding cyromazine to Luhmann hens: residues in tissues and effects on some biochemical constituents.'' Cyromazine was fed to Luhmann hens at 0.15 ppm level supplemented the basal diet for 3 weeks. The build up of cyromazine residues in liver and muscles of hens up to 7th day. . . .During the 3 weeks of feeding on the treated diet, the accumulated residues reduced the blood glucose and hepatic protein significantly up to 2 weeks. . . .Also such residues had adverse effects on the activities of alkaline phosphates and transaminase and extend on red blood cells, white blood cells, hemoglobin content and packed cell volume compared with the untreated hens.

''Effects of CGA-72662 (Larvadex) in turkeys during rearing and reproduction'' . . . The kidneys were characterized as enlarged, nodular and cystic, containing urate deposits and areas of necrosis.

I suggest that although short-term studies have been carried out on cyromazine, the long-term implications have not been addressed in this petition.

Allowing increased levels of cyromazine in foods loved by children, e.g., milk, mangoes and sweet corn without long-term studies of the effects of this toxin is tantamount to negligence.

EPA responses to these comments follows:

The cyromazine data base contains all required studies, this includes (sometimes with several studies for each study category):

Acute oral toxicity in the rat
Acute dermal toxicity in the rabbit
Acute inhalation toxicity in the rat
Primary eye irritation in the rabbit
Primary dermal irritation in the rabbit
Dermal sensitization in the guinea pig
Subchronic oral toxicity in the rat (13 weeks)
Subchronic oral toxicity in the dog (13 weeks)
Subchronic dermal toxicity in the rabbit (21 days)
Chronic oral toxicity in the rat (2 year)
Chronic oral toxicity in the dog (6 month)
Developmental toxicity in the rat
Developmental toxicity in the rabbit
Developmental toxicity in the rabbit with postnatal
Multigeneration reproduction study in the rat
Carcinogenicity study in the rat (2 year)
Carcinogenicity study in the mouse (2 year)
Mutagenicity battery
General metabolism in the rat
General metabolism in sheep
General metabolism in the chicken
General metabolism in the goat
General metabolism in the cow
Dermal absorption in the rat

All the required acute, short-term and long-term studies have been conducted. The Agency has assessed the long-term human health effects from exposure to cyromazine. The available dog studies only indicate effects on the hematological parameters (hematocrit and hemoglobin levels); there was an increase in liver weight in the 13–week study, but this was not seen in any other species. There was no indication of effects in the dog on the liver (other than weight, a normal physiological response to metabolism of the compound, no supportive histopathology was noted), kidneys, or on the immune system. The Agency notes that ''Decaflea'' product administered to the dog also contained 200 milligrams/tablet of diethylcarbamazine citrate, an ethyl carbamate and heartworm animal drug. If the health effects seen in the dog were treatment-related, the presence of this compound should also have been investigated as a possible cause.

In regards to the two open literature studies cited, the Agency notes that the first open literature study is an Egyptian study in chickens looking at liver function. The results indicate that the liver was functioning normally to detoxify the administered compound.

The second study was in turkeys intended to assess the effects on reproduction. This study utilized extremely high doses (up to 2 grams per kilogram diet). These are doses that exceeded even our limit doses. Since the turkey is one of the treated species for fly control, this study was not an evaluation of the reproductive effects, but rather a true toxicity study (producing adverse effects) as opposed to hazard studies used by EPA to evaluate potential hazards to humans. The investigators had to reduce one dose due to palatability problems (the turkeys would not eat the treated diet). The kidney effects were due to an overburdening of the organ from the extremely high doses. The Agency conducted open literature searches to determine if there was any report of adverse effects not reported previously and no additional information was found.

As stated previously and as indicated in the September 15, 1999 **Federal Register** proposal for cyromazine, the Agency has sufficient data to assess the short- and long-term hazards of cyromazine with special consideration to the sensitivity of infants and children from exposure to cyromazine as required by the FQPA.

The petitions requested that 40 CFR 180.414 be amended by establishing a tolerance for residues of the insecticide cyromazine, in or on mango at 0.3 parts per million (ppm); onion, green at 2.0 ppm; onions, dry bulb at 0.1 ppm; potato at 0.8 ppm; corn, sweet, (kernels plus cob with husks removed) at 0.5 ppm; corn, sweet, forage at 0.5 ppm; corn, sweet, stover at 0.5 ppm; radishes, root at 0.5 ppm; radishes, tops at 0.5 ppm; lima beans at 1.0 ppm; cotton, undelinted seed at 0.1 ppm; milk at 0.05 ppm; and meat, fat and meat byproducts (of cattle, goat, hogs, horses and sheep at 0.05 ppm. Based on the risk assessments discussed in the proposed rule and the findings made therein, the Agency concludes that there is a reasonable certainty that no harm will result to the U.S. population and to infants and children from aggregate exposure to residues of cyromazine. Therefore, tolerances are established as set forth below.

III. Objections and Hearing Requests

Under section 408(g) of the FFDCA, as amended by the FQPA, any person may file an objection to any aspect of this regulation and may also request a hearing on those objections. The EPA procedural regulations which govern the submission of objections and requests for hearings appear in 40 CFR part 178. Although the procedures in those regulations require some modification to reflect the amendments made to the FFDCA by the FQPA of 1996, EPA will continue to use those procedures, with appropriate adjustments, until the necessary modifications can be made. The new section 408(g) provides essentially the same process for persons to ''object'' to a regulation for an exemption from the requirement of a tolerance issued by EPA under new section 408(d), as was provided in the old FFDCA sections 408 and 409. However, the period for filing objections is now 60 days, rather than 30 days.

A. What Do I Need to Do to File an Objection or Request a Hearing?

You must file your objection or request a hearing on this regulation in accordance with the instructions provided in this unit and in 40 CFR part 178. To ensure proper receipt by EPA, you must identify docket control number OPP–300913A in the subject line on the first page of your submission. All requests must be in writing, and must be mailed or delivered to the Hearing Clerk on or before July 3, 2000.

1. *Filing the request.* Your objection must specify the specific provisions in the regulation that you object to, and the grounds for the objections (40 CFR 178.25). If a hearing is requested, the objections must include a statement of the factual issues(s) on which a hearing is requested, the requestor's contentions on such issues, and a summary of any evidence relied upon by the objector (40 CFR 178.27). Information submitted in connection with an objection or hearing request may be claimed confidential by marking any part or all of that information as CBI. Information so marked will not be disclosed except in accordance with procedures set forth in 40 CFR part 2. A copy of the information that does not contain CBI must be submitted for inclusion in the public record. Information not marked confidential may be disclosed publicly by EPA without prior notice.

Mail your written request to: Office of the Hearing Clerk (1900), Environmental Protection Agency, Ariel Rios Bldg., 1200 Pennsylvania Ave., NW., Washington, DC 20460. You may also deliver your request to the Office of the Hearing Clerk in Rm. C400, Waterside Mall, 401 M St., SW., Washington, DC 20460. The Office of the Hearing Clerk is open from 8 a.m. to 4 p.m., Monday through Friday, excluding legal holidays. The telephone number for the Office of the Hearing Clerk is (202) 260–4865.

2. *Tolerance fee payment.* If you file an objection or request a hearing, you must also pay the fee prescribed by 40 CFR 180.33(i) or request a waiver of that fee pursuant to 40 CFR 180.33(m). You must mail the fee to: EPA Headquarters Accounting Operations Branch, Office of Pesticide Programs, P.O. Box 360277M, Pittsburgh, PA 15251. Please identify the fee submission by labeling it ''Tolerance Petition Fees.''

EPA is authorized to waive any fee requirement ''when in the judgement of the Administrator such a waiver or refund is equitable and not contrary to the purpose of this subsection.'' For additional information regarding the waiver of these fees, you may contact James Tompkins by phone at (703) 305–5697, by e-mail at tompkins.jim@epa.gov, or by mailing a request for information to Mr. Tompkins at Registration Division (7505C), Office of Pesticide Programs, Environmental Protection Agency, Ariel Rios Bldg., 1200 Pennsylvania Ave., NW., Washington, DC 20460.

If you would like to request a waiver of the tolerance objection fees, you must mail your request for such a waiver to: James Hollins, Information Resources and Services Division (7502C), Office of Pesticide Programs, Environmental Protection Agency, Ariel Rios Bldg., 1200 Pennsylvania Ave., NW., Washington, DC 20460.

3. *Copies for the Docket.* In addition to filing an objection or hearing request with the Hearing Clerk as described in Unit VI.A., you should also send a copy of your request to the PIRIB for its inclusion in the official record that is described in Unit I.B.2. Mail your copies, identified by docket control number OPP–300913A, to: Public Information and Records Integrity Branch, Information Resources and Services Division (7502C), Office of Pesticide Programs, Environmental Protection Agency, Ariel Rios Bldg., 1200 Pennsylvania Ave., NW., Washington, DC 20460. In person or by courier, bring a copy to the location of the PIRIB described in Unit I.B.2. You may also send an electronic copy of your request via e-mail to: opp-docket@epa.gov. Please use an ASCII file format and avoid the use of special characters and any form of encryption. Copies of electronic objections and hearing requests will also be accepted on disks in WordPerfect 6.1/8.0 file format or ASCII file format. Do not include any CBI in your electronic copy. You may also submit an electronic copy of your request at many Federal Depository Libraries.

B. When Will the Agency Grant a Request for a Hearing?

A request for a hearing will be granted if the Administrator determines that the material submitted shows the following: There is a genuine and substantial issue of fact; there is a reasonable possibility that available evidence identified by the requestor would, if established resolve one or more of such issues in favor of the requestor, taking into account uncontested claims or facts to the contrary; and resolution of the factual issues(s) in the manner sought by the requestor would be adequate to justify the action requested (40 CFR 178.32).

IV. Regulatory Assessment Requirements

This final rule establishes a tolerance under FFDCA section 408(d) in response to a petition submitted to the Agency. The Office of Management and Budget (OMB) has exempted these types of actions from review under Executive Order 12866, entitled *Regulatory Planning and Review* (58 FR 51735, October 4, 1993). This final rule does not contain any information collections subject to OMB approval under the Paperwork Reduction Act (PRA), 44 U.S.C. 3501 *et seq.*, or impose any enforceable duty or contain any unfunded mandate as described under Title II of the Unfunded Mandates Reform Act of 1995 (UMRA) (Public Law 104–4). Nor does it require any prior consultation as specified by Executive Order 13084, entitled *Consultation and Coordination with Indian Tribal Governments* (63 FR 27655, May 19, 1998); special considerations as required by Executive Order 12898, entitled *Federal Actions to Address Environmental Justice in Minority Populations and Low-Income Populations* (59 FR 7629, February 16, 1994); or require OMB review or any Agency action under Executive Order 13045, entitled *Protection of Children from Environmental Health Risks and Safety Risks* (62 FR 19885, April 23, 1997). This action does not involve any technical standards that would require Agency consideration of voluntary consensus standards pursuant to section 12(d) of the National Technology Transfer and Advancement Act of 1995 (NTTAA), Public Law 104–113, section 12(d) (15 U.S.C. 272 note). Since tolerances and exemptions that are established on the basis of a petition under FFDCA section 408(d), such as the tolerance in this final rule, do not require the issuance of a proposed rule, the requirements of the Regulatory Flexibility Act (RFA) (5 U.S.C. 601 *et seq.*) do not apply. In addition, the Agency has determined that this action will not have a substantial direct effect on States, on the relationship between the national government and the States, or on the distribution of power and responsibilities among the various levels of government, as specified in Executive Order 13132, entitled *Federalism* (64 FR 43255, August 10, 1999). Executive Order 13132 requires EPA to develop an accountable process to ensure ''meaningful and timely input by State and local officials in the development of regulatory policies that have federalism implications.'' ''Policies that have federalism implications'' is defined in the Executive Order to

include regulations that have ''substantial direct effects on the States, on the relationship between the national government and the States, or on the distribution of power and responsibilities among the various levels of government.'' This final rule directly regulates growers, food processors, food handlers and food retailers, not States. This action does not alter the relationships or distribution of power and responsibilities established by Congress in the preemption provisions of FFDCA section 408(n)(4).

V. Submission to Congress and the Comptroller General

The Congressional Review Act, 5 U.S.C. 801 *et seq.*, as added by the Small Business Regulatory Enforcement Fairness Act of 1996, generally provides that before a rule may take effect, the agency promulgating the rule must submit a rule report, which includes a copy of the rule, to each House of the Congress and to the Comptroller General of the United States. EPA will submit a report containing this rule and other required information to the U.S. Senate, the U.S. House of Representatives, and the Comptroller General of the United States prior to publication of this final rule in the **Federal Register**. This final rule is not a ''major rule'' as defined by 5 U.S.C. 804(2).

List of Subjects in 40 CFR Part 180

Environmental protection, Administrative practice and procedure, Agricultural commodities, Pesticides and pests, Reporting and recordkeeping requirements.

Dated: April 27, 2000.

James Jones,

Director, Registration Division, Office of Pesticide Programs.

Therefore, 40 CFR chapter I is amended as follows:

PART 180—[AMENDED]

1. The authority citation for part 180 continues to read as follows:

Authority: 21 U.S.C. 321(q), (346a) and 371.

2. Section 180.414 is revised to read as follows:

§ 180.414 Cyromazine; tolerances for residues.

(a) *General.* (1) Tolerances are established for residues of the insecticide cyromazine (*N*-cyclopropyl-1,3,5-triazine-2,4,6-triamine) in or on the following raw agricultural commodities:

Commodity	Parts per million
Cattle, fat	0.05
Cattle, meat	0.05
Cattle, meat byproduct	0.05
Cucurbit vegetables	1.0
Eggs	0.25
Goats, fat	0.05
Goats, meat	0.05
Goats, meat byproduct	0.05
Hogs, fat	0.05
Hogs, meat	0.05
Hogs, meat byproduct	0.05
Horses, fat	0.05
Horses, meat	0.05
Horses, meat byproduct	0.05
Leafy vegetables (except Brassica)	7.0
Lima beans	1.0
Mango[1]	0.3
Milk	0.05
Mushrooms	1.0
Onion, dry bulb	2.0
Onion, green	0.1
Peppers	1.0
Potato	0.8
Poultry, fat (from chicken layer hens and chicken breeder hens only)	0.05
Poultry, meat (from chicken layer hens and chicken breeder hens only)	0.05
Poultry, meat byproduct (from chicken layer hens and chicken breeder hens only)	0.05
Sheep, fat	0.05
Sheep, meat	0.05
Sheep, meat byproduct	0.05
Tomato	0.5

[1]There are no U.S. registrations on mango as of May 4, 2000.

(2) The additive cyromazine (*N*-cyclopropyl-1,3,5-triazine-2,4,6-triamine) may be safely used in accordance with the following prescribed conditions:

(i) It is used as a feed additive only in feed for chicken layer hens and chicken breeder hens at the rate of not more than 0.01 pound of cyromazine per ton of poultry feed.

(ii) It is used for control of flies in manure of treated chicken layer hens and chicken breeder hens.

(iii) Feeding of cyromazine-treated feed must stop at least 3 days (72 hours) before slaughter. If the feed is formulated by any person other than the end user, the formulator must inform the end user, in writing, of the 3–day (72 hours) preslaughter interval.

(iv) To ensure safe use of the additive, the labeling of the pesticide formulation containing the feed additive shall conform to the labeling which is registered by the U.S. Environmental Protection Agency, and the additive shall be used in accordance with this registered labeling.

(v) Residues of cyromazine are not to exceed 5.0 parts per million (ppm) in poultry feed.

(b) *Section 18 emergency exemptions.* [Reserved]

(c) *Tolerances with regional registrations.* Tolerances with regional registrations, as defined in 180.1(n), are established for the residues of cyromazine (*N*-cyclopropyl-1,3,5-triazine-2,4,6-triamine) in or on the following raw agricultural commodities:

Commodity	Parts per million
Cabbage, Chinese	3.0
Mustard, Chinese	3.0

(d) *Indirect or inadvertent residues.* Tolerances are established for the indirect or inadvertent residues of cyromazine (*N*-cyclopropyl-1,3,5-triazine-2,4,6-triamine), in or on the raw agricultural commodities when present therein as a result of the application of cyromazine to growing crops listed in paragraph (a)(1) of this section.

Commodity	Parts per million
Cotton, undelinted seed	0.1 ppm
Corn, sweet, (kernels plus cob with husks removed)	0.5 ppm
Corn, sweet, forage	0.5 ppm
Corn, sweet, stover	0.5 ppm
Radish, root	0.5 ppm
Radish, tops (leaves)	0.5 ppm

[FR Doc. 00–11146 Filed 5–3–00; 8:45 am]

BILLING CODE 6560–50–F

ENVIRONMENTAL PROTECTION AGENCY

40 CFR Part 180

[OPP–300995; FRL–6554–9]

RIN 2070–AB78

Azoxystrobin: Pesticide Tolerance

AGENCY: Environmental Protection Agency (EPA).

ACTION: Final rule.

SUMMARY: This regulation increases the tolerances for residues of azoxystrobin (methyl) (E)-2-(2-(6-(2-cyanophenoxy)pyrimidin-4-yloxy)phenyl)-3-methoxyacrylate) and its Z isomer (methyl(Z)-2-(2-(6-(2-cyanophenoxy)pyrimidin-4-yloxy)phenyl)-3-methoxyacrylate) in or

on pistachios from 0.01 part per million (ppm) to 0.02 ppm and in or on tree nuts from 0.01 ppm to 0.02 ppm. A final rule establishing tolerances of azoxystrobin and its Z isomer in or on pistachios at 0.01 ppm and in or on tree nuts at 0.01 ppm was published in the **Federal Register** of March 17, 1999. These were the tolerances that Zeneca Ag Products had originally proposed in pesticide petition number 7F4864. Immediately following publication of this final rule, EPA received telephone comments from two parties indicating that they believed that the pistachio and tree nuts tolerances were too low, considering the data submitted in support of the tolerances and the use directions on the label, and might lead to adulterated commodities even when the label use directions were accurately followed. EPA agreed to revisit the tolerances assigned to these commodities, concluded that the commenters were correct in their concerns, and published a proposed rule in the **Federal Register** of January 5, 2000, that made the proposal to increase the tolerances for azoxystrobin and its Z isomer in or on pistachios and in or on tree nuts to 0.02 ppm. No comments concerning the proposed rule were received.

DATES: This regulation is effective May 4, 2000. Objections and requests for hearings, identified by docket control number OPP–300995, must be received by EPA on or before July 3, 2000.

ADDRESSES: Written objections and hearing requests may be submitted by mail, in person, or by courier. Please follow the detailed instructions for each method as provided in Unit VI. of the **SUPPLEMENTARY INFORMATION:** To ensure proper receipt by EPA, your objections and hearing requests must identify docket control number OPP–300995 in the subject line on the first page of your response.

FOR FURTHER INFORMATION CONTACT: By mail: Cynthia Giles-Parker, Registration Division (7505C), Office of Pesticide Programs, Environmental Protection Agency, Ariel Rios Bldg., 1200 Pennsylvania Ave., NW.,Washington, DC 20460; telephone number: (703) 305–7740; and e-mail address: giles-parker.cynthia@epa.gov.

SUPPLEMENTARY INFORMATION:

I. General Information

A. Does this Action Apply to Me?

You may be affected by this action if you are an agricultural producer, food manufacturer, or pesticide manufacturer. Potentially affected categories and entities may include, but are not limited to:

Categories	NAICS codes	Examples of Potentially Affected Entities
Industry	111	Crop Production
	112	Animal production
	311	Food manufacturing
	32532	Pesticide manufacturing

This listing is not intended to be exhaustive, but rather provides a guide for readers regarding entities likely to be affected by this action. Other types of entities not listed in the table could also be affected. The North American Industrial Classification System (NAICS) codes have been provided to assist you and others in determining whether or not this action might apply to certain entities. If you have questions regarding the applicability of this action to a particular entity, consult the person listed under **FOR FURTHER INFORMATION CONTACT**.

B. How Can I Get Additional Information, Including Copies of this Document and Other Related Documents?

1. *Electronically*. You may obtain electronic copies of this document, and certain other related documents that might be available electronically, from the EPA Internet Home Page at http://www.epa.gov/. To access this document, on the Home Page select ''Laws and Regulations'' and then look up the entry for this document under the ''**Federal Register**—Environmental Documents.'' You can also go directly to the **Federal Register** listings at http://www.epa.gov/fedrgstr/.

2. *In person*. The Agency has established an official record for this action under docket control number OPP–300995. The official record consists of the documents specifically referenced in this action, and other information related to this action, including any information claimed as Confidential Business Information (CBI). This official record includes the documents that are physically located in the docket, as well as the documents that are referenced in those documents. The public version of the official record does not include any information claimed as CBI. The public version of the official record, which includes printed, paper versions of any electronic comments submitted during an applicable comment period is available for inspection in the Public Information and Records Integrity Branch (PIRIB), Rm. 119, Crystal Mall #2 1921 Jefferson Davis Hwy., Arlington, VA, from 8:30 a.m. to 4 p.m., Monday through Friday, excluding legal holidays. The PIRIB telephone number is (703) 305–5805.

II. Background and Statutory Findings

In the **Federal Register** of March 17, 1999 (64 FR 113106) (FRL–6064–6), EPA issued a final rule pursuant to section 408(b)(2)(A)(i) of the Federal Food, Drug, and Cosmetic Act (FFDCA), 21 U.S.C. 346a as amended by the Food Quality Protection Act of 1996 (FQPA) (Public Law 104–170) announcing the establishment of tolerances for azoxystrobin and its Z isomer on several commodities, including pistachios at 0.01 ppm and tree nuts at 0.01 ppm, as had been proposed by Zeneca Ag Products, 1800 Concord Pike, Wilmington, DE 19897 in tolerance petition number 7F4864. This final rule included a detailed discussion of the risk assessment and of residue and other considerations that lay behind EPA's decision to establish the tolerances. Telephone comments were received from two parties in California immediately after publication of the rule. In both cases, the parties believed that the pistachio and tree nuts tolerances were too low, considering the data submitted in support of the tolerances and the use directions on the label, and might lead to adulterated commodities even when the use directions on the label were accurately followed. EPA agreed to revisit the tolerances assigned to these commodities. If the commenter's comments were substantiated, a reassessment of the risk from the use of azoxystrobin would also be necessary. The Agency has concluded that the commenters' concerns are justified and that the appropriate tolerances for these commodities are 0.02 ppm in or on pistachios and 0.02 ppm in or on tree nuts. There was a negligible increase in the risk calculated for the use of azoxystrobin as a result of the increases in these two tolerances. Therefore, in the **Federal Register** of January 5, 2000 (65 FR 425) (FRL–6393–1), a proposed rule was issued, pursuant to section 408(b)(2)(A)(ii) of the FFDCA as amended by the FQPA, announcing the Agency's intention to increase the tolerances for azoxystrobin and its Z isomer in or on pistachio nuts to 0.02 ppm and in or on tree nuts to 0.02 ppm. There were no comments received in response to the proposed rule.

The proposed rule requested that 40 CFR 180.507 be amended by increasing the tolerances of the fungicide, azoxystrobin and its Z isomer, in or on pistachio nuts to 0.02 ppm and in or on tree nuts to 0.02 ppm.

Section 408(b)(2)(A)(i) of the FFDCA allows EPA to establish or leave in effect a tolerance (the legal limit for a pesticide chemical residue in or on a food) only if EPA determines that the tolerance is ''safe.'' Section 408(b)(2)(A)(ii) defines ''safe'' to mean that ''there is a reasonable certainty that no harm will result from aggregate exposure to the pesticide chemical residue, including all anticipated dietary exposures and all other exposures for which there is reliable information.'' This includes exposure through drinking water and in residential settings, but does not include occupational exposure. Section 408(b)(2)(C) requires EPA to give special consideration to exposure of infants and children to the pesticide chemical residue in establishing a tolerance and to ''ensure that there is a reasonable certainty that no harm will result to infants and children from aggregate exposure to the pesticide chemical residue.''

EPA performs a number of analyses to determine the risks from aggregate exposure to pesticide residues. For further discussion of the regulatory requirements of section 408 and a complete description of the risk assessment process, see the final rule on Bifenthrin Pesticide Tolerances November 26, 1997 (62 FR 62961) (FRL–5754–7).

III. Aggregate Risk Assessment and Determination of Safety

Consistent with section 408(b)(2)(D), EPA has reviewed the available scientific data and other relevant information in support of this action. EPA has sufficient data to assess the hazards of and to make a determination on aggregate exposure, consistent with section 408(b)(2), for a tolerance for azoxystrobin and its Z isomer in or on pistachios at 0.02 parts per million (ppm) and in or on tree nuts at 0.02 ppm. EPA's assessment of the dietary exposures and risks associated with increasing the subject tolerances for azoxystrobin and its Z isomer from 0.01 ppm to 0.02 ppm was performed in essentially exactly the same way as was the azoxystrobin risk assessment contained in the azoxystrobin final rule that was published in the **Federal Register** of March 17, 1999, except that where tolerance-level residues were used in the analyses, in the first analysis a tolerance value for azoxystrobin and its Z isomer of 0.01 ppm was used for pistachios and the same value was used for tree nuts, while in the second analysis, a tolerance value for azoxystrobin and its Z isomer of 0.02 ppm was used for pistachios and a tolerance value for azoxystrobin and its Z isomer of 0.02 ppm was used for tree nuts. The exposure/risk reassessment lead to no change in the toxicological profile or toxicological endpoints compared to those in the azoxystrobin final rule published on March 17, 1999. The increases in the exposure and risk estimates in the second analysis, compared to those presented in the first analysis, were so small (generally at the fourth decimal place) that the risk assessment values (rounded) that are reported in the March 17, 1999 final rule were not changed. Stated another way, the risk increase resulting from this final rule will be negligible.

IV. Other Considerations

No change in the discussions of metabolism in plants and animals, analytical enforcement methodology, magnitude of residues, and international residue limits, compared to the discussions of those topics in the final rule dated March 17, 1999, that established azoxystrobin tolerances on a number of commodities, including pistachios and tree nuts, is needed.

V. Conclusion

Therefore, tolerances for the residues of azoxystrobin and its Z isomer in or on pistachios are increased from 0.01 ppm to 0.02 ppm and in or on tree nuts are increased from 0.01 ppm to 0.02 ppm.

VI. Objections and Hearing Requests

Under section 408(g) of the FFDCA, as amended by the FQPA, any person may file an objection to any aspect of this regulation and may also request a hearing on those objections. EPA procedural regulations which govern the submission of objections and requests for hearings appear in 40 CFR part 178. Although the procedures in those regulations require some modification to reflect the amendments made to the FFDCA by the FQPA of 1996, EPA will continue to use those procedures, with appropriate adjustments, until the necessary modifications can be made. The new section 408(g) provides essentially the same process for persons to ''object'' to a regulation for an exemption from the requirement of a tolerance issued by EPA under new section 408(d), as was provided in the old FFDCA sections 408 and 409. However, the period for filing objections is now 60 days, rather than 30 days.

A. What Do I Need to Do to File an Objection or Request a Hearing?

You must file your objection or request a hearing on this regulation in accordance with the instructions provided in this unit and in 40 CFR part 178. To ensure proper receipt by EPA, you must identify docket control number OPP–300995 in the subject line on the first page of your submission. All requests must be in writing, and must be mailed or delivered to the Hearing Clerk on or before July 3, 2000.

1. *Filing the request.* Your objection must specify the specific provisions in the regulation that you object to, and the grounds for the objections (40 CFR 178.25). If a hearing is requested, the objections must include a statement of the factual issues(s) on which a hearing is requested, the requestor's contentions on such issues, and a summary of any evidence relied upon by the objector (40 CFR 178.27). Information submitted in connection with an objection or hearing request may be claimed confidential by marking any part or all of that information as CBI. Information so marked will not be disclosed except in accordance with procedures set forth in 40 CFR part 2. A copy of the information that does not contain CBI must be submitted for inclusion in the public record. Information not marked confidential may be disclosed publicly by EPA without prior notice.

Mail your written request to: Office of the Hearing Clerk (1900), Environmental Protection Agency, Ariel Rios Bldg., 1200 Pennsylvania Ave., NW., Washington, DC 20460. You may also deliver your request to the Office of the Hearing Clerk in Rm. M3708, Waterside Mall, 401 M St., SW., Washington, DC 20460. The Office of the Hearing Clerk is open from 8 a.m. to 4 p.m., Monday through Friday, excluding legal holidays. The telephone number for the Office of the Hearing Clerk is (202) 260–4865.

2. *Tolerance fee payment.* If you file an objection or request a hearing, you must also pay the fee prescribed by 40 CFR 180.33(i) or request a waiver of that fee pursuant to 40 CFR 180.33(m). You must mail the fee to: EPA Headquarters Accounting Operations Branch, Office of Pesticide Programs, P.O. Box 360277M, Pittsburgh, PA 15251. Please identify the fee submission by labeling it ''Tolerance Petition Fees.''

EPA is authorized to waive any fee requirement ''when in the judgement of the Administrator such a waiver or refund is equitable and not contrary to the purpose of this subsection.'' For additional information regarding the waiver of these fees, you may contact

James Tompkins by phone at (703) 305–5697, by e-mail at tompkins.jim@epa.gov, or by mailing a request for information to Mr. Tompkins at Registration Division (7505C), Office of Pesticide Programs, Environmental Protection Agency, Ariel Rios Bldg., 1200 Pennsylvania Ave., NW., Washington, DC 20460.

If you would like to request a waiver of the tolerance objection fees, you must mail your request for such a waiver to: James Hollins, Information Resources and Services Division (7502C), Office of Pesticide Programs, Environmental Protection Agency, Ariel Rios Bldg., 1200 Pennsylvania Ave., NW., Washington, DC 20460.

3. *Copies for the Docket*. In addition to filing an objection or hearing request with the Hearing Clerk as described in Unit VI.A., you should also send a copy of your request to the PIRIB for its inclusion in the official record that is described in Unit I.B.2. Mail your copies, identified by docket control number OPP–300995, to: Public Information and Records Integrity Branch, Information Resources and Services Division (7502C), Office of Pesticide Programs, Environmental Protection Agency, Ariel Rios Bldg., 1200 Pennsylvania Ave., NW., Washington, DC 20460. In person or by courier, bring a copy to the location of the PIRIB described in Unit I.B.2. You may also send an electronic copy of your request via e-mail to: opp-docket@epa.gov. Please use an ASCII file format and avoid the use of special characters and any form of encryption. Copies of electronic objections and hearing requests will also be accepted on disks in WordPerfect 6.1/8.0 file format or ASCII file format. Do not include any CBI in your electronic copy. You may also submit an electronic copy of your request at many Federal Depository Libraries.

B. When Will the Agency Grant a Request for a Hearing?

A request for a hearing will be granted if the Administrator determines that the material submitted shows the following: There is a genuine and substantial issue of fact; there is a reasonable possibility that available evidence identified by the requestor would, if established resolve one or more of such issues in favor of the requestor, taking into account uncontested claims or facts to the contrary; and resolution of the factual issues(s) in the manner sought by the requestor would be adequate to justify the action requested (40 CFR 178.32).

VII. Regulatory Assessment Requirements

This final rule increases two tolerances under FFDCA section 408(d) in response to comments received following publication of a final rule that was itself a response to a petition submitted to the Agency. The Office of Management and Budget (OMB) has exempted these types of actions from review under Executive Order 12866, entitled *Regulatory Planning and Review* (58 FR 51735, October 4, 1993). This final rule does not contain any information collections subject to OMB approval under the Paperwork Reduction Act (PRA), 44 U.S.C. 3501 *et seq.*, or impose any enforceable duty or contain any unfunded mandate as described under Title II of the Unfunded Mandates Reform Act of 1995 (UMRA) (Public Law 104–4). Nor does it require any prior consultation as specified by Executive Order 13084, entitled *Consultation and Coordination with Indian Tribal Governments* (63 FR 27655, May 19, 1998); special considerations as required by Executive Order 12898, entitled *Federal Actions to Address Environmental Justice in Minority Populations and Low-Income Populations* (59 FR 7629, February 16, 1994), or require OMB review or any Agency action under Executive Order 13045, entitled *Protection of Children from Environmental Health Risks and Safety Risks* (62 FR 19885, April 23, 1997). This action does not involve any technical standards that would require Agency consideration of voluntary consensus standards pursuant to section 12(d) of the National Technology Transfer and Advancement Act of 1995 (NTTAA), Public Law 104–113, section 12(d) (15 U.S.C. 272 note). Since tolerances and exemptions that are established on the basis of a petition under FFDCA section 408(d), such as the tolerance in this final rule, do not require the issuance of a proposed rule, the requirements of the Regulatory Flexibility Act (RFA) (5 U.S.C. 601 *et seq.*) do not apply. In addition, the Agency has determined that this action will not have a substantial direct effect on States, on the relationship between the national government and the States, or on the distribution of power and responsibilities among the various levels of government, as specified in Executive Order 13132, entitled *Federalism* (64 FR 43255, August 10, 1999) Executive Order 13132 requires EPA to develop an accountable process to ensure ''meaningful and timely input by State and local officials in the development of regulatory policies that have federalism implications.'' ''Policies that have federalism implications'' is defined in the Executive Order to include regulations that have ''substantial direct effects on the States, on the relationship between the national government and the States, or on the distribution of power and responsibilities among the various levels of government.'' This final rule directly regulates growers, food processors, food handlers and food retailers, not States. This action does not alter the relationships or distribution of power and responsibilities established by Congress in the preemption provisions of FFDCA section 408(n)(4).

VIII. Submission to Congress and the Comptroller General

The Congressional Review Act, 5 U.S.C. 801 *et seq.*, as added by the Small Business Regulatory Enforcement Fairness Act of 1996, generally provides that before a rule may take effect, the agency promulgating the rule must submit a rule report, which includes a copy of the rule, to each House of the Congress and to the Comptroller General of the United States. EPA will submit a report containing this rule and other required information to the U.S. Senate, the U.S. House of Representatives, and the Comptroller General of the United States prior to publication of this final rule in the **Federal Register**. This final rule is not a ''major rule'' as defined by 5 U.S.C. 804(2).

List of Subjects in 40 CFR Part 180

Environmental protection, Administrative practice and procedure, Agricultural commodities, Pesticides and pests, Reporting and recordkeeping requirements.

Dated: April 27, 2000.

James Jones,

Director, Registration Division, Office of Pesticide Programs.

Therefore, 40 CFR chapter I is amended as follows:

PART 180—[AMENDED]

1. The authority citation for part 180 continues to read as follows:

Authority: 21 U.S.C. 321(q), (346a) and 371.

2. In § 180.507, by revising the entries for pistachios and tree nuts to the table in paragraph (a)(1) to read as follows:

§ 180.507 Azoxystrobin; tolerances for residues.

(a) *General*. (1) * * *

Commodity	Parts per million
* * * * * * *	
Pistachios ...	0.02
* * * * * * *	
Tree nuts	0.02
* * * * * * *	

* * * * *

[FR Doc. 00–11145 Filed 5–3–00; 8:45 am]

BILLING CODE 6560–50–F

FEDERAL COMMUNICATIONS COMMISSION

47 CFR Part 54

[CC Docket Nos. 96–45, 97–21, and 98–171; FCC 00–118]

Federal-State Joint Board on Universal Service; Division Announces Release of Revised Universal Worksheet, FCC for 457

AGENCY: Federal Communications Commission.

ACTION: Final rule.

SUMMARY: This document concerning the Federal-State Joint Board on Universal Service addresses challenges filed by several parties of the Commission's decision to include in the universal service contribution base those charges identified by carriers on end-user bills as recovering state or federal universal service contributions. The Commission denies the parties' challenges.

DATES: Effective May 4, 2000.

FOR FURTHER INFORMATION CONTACT: Jack Zinman, Attorney, Common Carrier Bureau, Accounting Policy Division, (202) 418–7400.

SUPPLEMENTARY INFORMATION: This is a summary of the Commission's Twenty-First Order on Reconsideration in CC Docket No. 96–45, and Memorandum Opinion and Order in CC Docket Nos. 96–45, 97–21, and 98–171; FCC 00–118, released on April 11, 2000. The full text of this document is available for public inspection during regular business hours in the FCC Reference Center, Room CY–A257, 445 Twelfth Street, SW, Washington, DC 20554.

Introduction

1. Several parties have challenged the Commission's decision to include in the universal service contribution base those charges identified by carriers on end-user bills as recovering state or federal universal service contributions. As described, these challenges are pending before the Commission at various procedural stages. Because all of the challenges concern the same issue, we address them together in this order. For the reasons that follow, we deny the parties' challenges.

II. Discussion

A. Alleged Procedural Violations

2. The Commission's rules provide that contributions to the universal service support mechanisms shall be based on ''revenues derived from domestic end users for telecommunications or telecommunications services.'' The parties claim that charges assessed on end users to recover a carrier's contributions to state or federal universal service support mechanisms do not qualify as revenues derived from telecommunications or telecommunications services. Thus, the parties assert that Line 48 on the 1998 Universal Service Worksheet (FCC Form 457), which treats universal service charges as telecommunications revenues, constitutes a new substantive rule. Based on the assertion that Line 48 is a new substantive rule, the parties further allege that APD committed two procedural violations in adding Line 48 to the 1998 Worksheet. First, the parties claim that APD exceeded the authority delegated to the Bureau by adopting a new substantive rule, which is a task reserved to the Commission in Part 1, Subpart C, of the Commission's rules. Second, the parties allege that APD violated section 553 of the Administrative Procedure Act (APA) by adopting a new substantive rule without an opportunity for notice and comment. We disagree.

3. The parties have erred in their underlying assertion that Line 48 constitutes a new substantive rule. In the *First Report and Order,* 62 FR 32862 (June 17, 1997), released on May 8, 1997, the Commission decided to assess contributions to the universal service support mechanisms on telecommunications revenues that carriers derive from end users. The Commission permitted carriers to recover their universal service contributions from their customers and ''to specify that fact on customers' bills,'' e.g., through a line-item charge. The Commission codified the contribution requirement at § 54.709(a)(1) of its rules, which states that contributions to the universal service support mechanisms shall be based on ''revenues derived from domestic end users for telecommunications or telecommunications services.'' The 1996 Act defines telecommunications as ''the transmission, between or among points specified by the user, of information of the user's choosing, without change in the form or content of the information sent and received.'' The 1996 Act also defines telecommunications services as ''the offering of telecommunications *for a fee* directly to the public * * *.'' The charge assessed on an end-user to recover a carrier's contributions to state or federal universal service support mechanisms is simply one part of the carrier's fee for the provision of telecommunications to that end-user. Although a carrier may choose to assess a particular cost of providing telecommunications or telecommunications services separately from other such costs, the carrier's choice does not change the nature of the revenues received from the end-user. Thus, carrier-imposed universal service charges are, and always have been, revenues derived from the provision of telecommunications. As such, carrier-imposed universal service charges are part of the universal service contributions base.

4. Moreover, we believe that the parties misapprehend the nature of carrier-imposed universal service charges. Instead of forcing carriers to recover their universal service contributions through a mandatory surcharge on their customers, the Commission gave carriers the flexibility to decide whether, how, and how much to recover from their customers. For example, carriers may recover their universal service contributions by raising their rates or by adding a separate line-item universal service charge to their customers' bills. In either event, the carrier is recovering its contribution from its end-users. Merely because the Commission allowed carriers to identify a portion of their fees as recovering the carriers' universal service contributions, the monies so collected are not somehow rendered non-telecommunications revenues. Indeed, but for the provision of telecommunications to its customers, a carrier would not have a telecommunications revenues, would not be required to contribute to the universal service support mechanisms, and would not have any lawful basis to assess a universal service charge on its customers.

5. Because carrier-imposed universal service charges are end-user telecommunications revenues, the addition of Line 48 on the 1998 Worksheet does not constitute a new substantive rule. Rather, Line 48 is

merely the Bureau's implementation and clarification of the existing Commission rule requiring that contributions be based on end-user telecommunications revenues. Because Line 48 is not a new substantive rule, the Bureau neither exceeded its delegated authority nor violated the notice and comment requirements of the APA. Accordingly, we reject the parties' procedural claims.

B. Substantiative Arguments Regarding the Inclusion of Carrier-Imposed Universal Service Charges in the Contribution Base

6. The parties argue that including carrier-imposed universal service charges in the contribution base creates a circular formula that drives up the contribution base, causing increased contributions, which result in higher carrier-imposed universal service charges that further drive up the contribution base. Thus, the parties claim that the inclusion of carrier-imposed universal service charges in the contribution base disserves the public interest because it results in an upwardly spiraling ''vicious cycle'' of perpetual increases in carrier contributions to the universal service support mechanisms. For example, PCIA supplies the following descriptions of this alleged effect:

> [I]f a carrier receives $100 in revenues for flat-rated services from an end-user over a given period, and assuming a 10 percent contribution rate, the carrier's contribution would be $10. If the carrier passes the $10 through to the customer, the revenues received from the customer (in the next comparable period) would increase to $110. If the $10 pass through is considered ''end user telecommunications revenues,'' the contribution would increase to $11, as an assessment would be included on the recovery of contributions from the customer.

Metrocall and Blooston provide similar examples. Upon closer examination, however, the inclusion of carrier-imposed universal service charges in the contribution base does not have the effect claimed by the parties.

7. In each of their examples, the parties assume that, all other things being equal, the contribution factor remains constant as the contribution base increases. This assumption, however, is mathematically impossible. The contribution factor is the ratio of total universal service program costs to the contribution base. Stated as a mathematical equation, the contribution factor can be described as follows:

$$\text{Contribution Factor} = \frac{\text{Total Program Costs}}{\text{Contribution Base}}$$

The total program costs and the contribution base are independent variables in this equation. The contribution factor, on the other hand, is the dependent variable, i.e., the contribution factor is dependent on the amount of the total program costs and the contribution base. Because the contribution base is the denominator in this equation, the contribution factor is inversely proportional to the contribution base. In other words, as the contribution base increases, all other things being equal,the contribution factor must decrease.

8. As demonstrated by the exhibit, all other things being equal, when carrier-imposed universal service charges are included in the contribution base, the contribution base increases, the contribution factor decreases in proportion to the increase in the contribution base, and the amount of each carrier's contribution remains constant. Therefore, the parties' ''vicious cycle'' argument is unfounded. Moreover, if carrier-imposed universal service charges were *not* included in the contribution base, there would be a competitive imbalance in the Commission's contribution methodology. All other things being equal, a carrier that chose to recover its contributions by increasing its rates would have an increased individual contribution base and an increased contribution. A carrier that chose to recover its contributions by imposing a line-item charge would not have an increased individual contribution base or an increased contribution. Such a result would put carriers choosing to raise their rates at a disadvantage compared to carriers choosing to impose a line-item charge, would render illusory the ''choice'' of recovery methods, and would violate the universal service principle of competitive neutrality. Accordingly, for all of the foregoing reasons, we reject the parties' claims that carrier-imposed universal service charges should be excluded from the contribution base.

III. Ordering Clauses

9. The authority contained in sections 1–4, 201–205, 218–220, 254, 303(r), 403, and 405 of the Communications Act of 1934, as amended, and section 1.429 of the Commission's rules, Twenty-First Order on Reconsideration in CC Docket No. 96–45 and the Memorandum Opinion and order in CC Docket Nos. 96–45, 97–21, and 98–171 are adopted.

10. The authority contained in sections 4(i) and 405 of the Communications Act of 1934, as amended, and section 1.429 of the Commission's rules, the Petition for Partial Reconsideration and Clarification filed by the Personal Communications Industry Association on July 17, 1997 is denied to the extent stated.

11. The authority contained in sections 4(i) and 405 of the Communications Act of 1934, as amended, and section 1.106 of the Commission's rules, the Petition for Reconsideration filed by the Personal Communications Industry Association on August 31, 1998 is denied.

12. The authority contained in sections 4(i) and 405 of the Communications Act of 1934, as amended, and section 1.106 of the Commission's rules, the Petition for Reconsideration filed by Metrocall, Inc. on August 31, 1998 is denied.

List of Subjects in 47 CFR Part 54

Universal service.

Federal Communications Commission.

Magalie Roman Salas,

Secretary.

[FR Doc. 00–11101 Filed 5–3–00; 8:45 am]

BILLING CODE 6712–01–M

FEDERAL COMMUNICATIONS COMMISSION

47 CFR Part 73

[FCC 00–130; MM Docket No. 98–175; RM–9364]

Television Broadcasting Services; Digital Television Broadcasting Services; Buffalo, NY

AGENCY: Federal Communications Commission.

ACTION: Final rule.

SUMMARY: In a *Memorandum Opinion and Order,* the Commission denies the Application for Review filed by Coalition for Noncommercial Media (''CNM''), and affirms the Mass Media Bureau's *Report and Order* 64 FR 45893 (August 23, 1999). The Bureau's action had granted the noncommercial educational channel reservation swap for Channels 17 and *23 in Buffalo, New York and related digital channels requested by licensee Western New York Public Broadcasting Association. That *Report and Order* also had denied oppositions filed by Grant Television, Inc., licensee of WNYO–TV, Buffalo, New York, WKBW–TV Licensee, Inc., licensee of Station WKBW–TV, Buffalo, New York, Kevin Smardz, President of Southtowns Christian Center, Lakeview, New York, and CNM.

DATES: Effective July 3, 2000.

FOR FURTHER INFORMATION CONTACT: Victoria M. McCauley, Mass Media Bureau, (202) 418–2180.

SUPPLEMENTARY INFORMATION: This is a synopsis of the Commission's *Memorandum Opinion and Order,* MM Docket No. 98–175, adopted April 6, 2000, and released April 19, 2000. The full text of this Commission decision is available for inspection and copying during normal business hours in the FCC Reference Center (Room 239), 445 12th Street, SW, Washington, DC. The complete text of this decision may also be purchased from the Commission's copy contractor, International Transcription Services, Inc., (202) 857–3800, 1231 20th Street, NW, Washington, DC 20036.

Summary of Memorandum Opinion and Order

Before us is an Application for Review of the *Report and Order* which amended the Television Table of Allotments for Buffalo, New York at the request of Western New York Public Broadcasting Association (''WNYPBA''), licensee of Stations WNED–TV, Channel 17, and WNEQ–TV, Channel *23, Buffalo, New York, to reflect Channel 17 as reserved for noncommercial educational use, and Channel 23 as nonreserved, and related changes to the DTV Table of Allotments. Coalition for Noncommercial Media (''CNM''), a group of Buffalo-Area citizens and WNED/WNEQ–TV viewers filed this Application for Review, alleging that the Mass Media Bureau erred in making these amendments.

Background

The *Report and Order* granting the change of reservation considered and rejected arguments opposing WNYPBA's request by Grant Television, Inc. licensee of WNYO–TV, Buffalo, New York, WKBW–TV Licensee, Inc., licensee of Station WKBW–TV, Buffalo, New York, Kevin Smardz, President of Southtowns Christian Center, Lakeview, New York, and CNM. The *Report and Order* also denied CNM's counterproposal requesting that the Commission amend the TV Table of Allotments to reserve all unreserved channels being used for noncommercial operation on the grounds that it was not mutually exclusive with the WNYPBA proposal.

The *Report and Order* held (1) that the exchange of reservation would serve the public interest, and (2) that it could be effectuated under the Commission's existing rules and policies. The Bureau noted the transaction would serve the public interest because there would be no diminution in noncommercial educational service in Buffalo and that such service would actually expand because Station WNED–TV, clearly the more powerful and broad reaching of the two stations would be on a reserved channel. It also noted that WNYPBA could sell Station WNED–TV, arguably the more valuable and marketable station, on unreserved Channel 17 as a commercial entity at any time, but that it had foregone this opportunity in order to retain noncommercial educational service on Station WNED–TV on Channel *17.

The Bureau also pointed out that under the Commission's rules allowing intraband channel swaps between commercial and noncommercial stations, WNYPBA, after selling Station WNED–TV, could have then swapped channels with WNED–TV's new licensee and reached the same result as its proposed reservation exchange, and that avoiding this two-stage filing would also serve the public interest.

The Bureau also addressed CNM's ''counterproposal,'' which had two aspects: One requesting that we reserve Channel 17 at Buffalo, and one requesting that we reserve all unreserved channels of stations which were being operated noncommercially. The Bureau considered CNM's counterproposal as not appropriately filed in this proceeding because CNM's request to reserve all unreserved channels of stations being operated as noncommercial stations was not mutually exclusive with WNYPBA's proposal at Buffalo.

Application for Review

CNM argues again that the Bureau should have denied WNYPBA's request for the channel reservation swap. CNM goes on to argue that the Bureau failed to consider its ''counterproposal.'' It then repeats all of the arguments it made in its comments before the Bureau. CNM's Petition for Emergency Relief, supported by CIPB, requests that the Commission stay the effect of the *Report and Order,* and prevent WNYPBA from converting Station WNEQ–TV (or WNED–TV) to commercial operation until the resolution of its proposal to reserve Channel 17 in this matter.

Discussion

As a preliminary matter, we will note that CNM's Petition for Emergency Relief is moot and will be dismissed. Furthermore, we will not address CNM's repeated arguments against the reservation swap. The Bureau properly addressed CNM's arguments in the *Report and Order* and we will not disturb its decision. However, we will address CNM's argument that the Bureau overlooked the first aspect of CNM's ''counterproposal,'' to reserve Channel 17 at Buffalo. CNM argues that pursuant to the holding of *Ashbacker* v. *F.C.C.* (''*Ashbacker*''), the Bureau erred when it failed specifically to address its disposal of CNM's ''counterproposal'' requesting the reservation of Channel 17 at Buffalo on a comparative basis with the proposal filed by WNYPBA.

While the Bureau may have omitted mention of its specific disposal of CNM's ''counterproposal'' to reserve Channel 17 at Buffalo, any error this involved was harmless. First, a third party may not petition for a change in another station's authorization, particularly if the licensee has disavowed an interest in the particular proposed change. In addition, contrary to CNM's argument, the Bureau correctly held that the rule of *Ashbacker* does not apply to channel exchanges because the channels are occupied. Finally, although the two proposals may have been mutually exclusive as a matter of common usage because they could not co-exist, they were not mutually exclusive within the strict interpretation of that phrase as a term of art applied to broadcast channel allotments, which presumes a short-spacing between two channels.

We also note that the Bureau correctly held that the second aspect of CNM's ''counterproposal,'' to reserve all unreserved channels of stations operating as noncommercial educational stations was not appropriately filed in this matter. The Bureau was constrained to limit its decision to the merits of the issues as they applied to the instant parties. The issue of reserving all unreserved channels on which licensees operate noncommercially is a matter appropriately raised as a general rulemaking, not as an issue to be resolved in an adjudicatory proceeding such as this.

Finally, CNM repeats an argument made to the Bureau that allowing this transaction could spark a ''flood'' of requests by other public broadcasters seeking to sell their ''second channel'' public television stations. CNM claims that the Bureau's answer to this argument mischaracterized the number of noncommercial stations operating on unreserved frequencies. CNM is incorrect. The Bureau correctly referred to the number of communities in which a pair of *co-owned* (rather than *independently owned*) noncommercial stations is operating with one station on an unreserved channel.

List of Subjects in 47 CFR Part 73

Television broadcasting, Digital television broadcasting.

Federal Communications Commission.

Magalie Roman Salas,

Secretary.

[FR Doc. 00–11099 Filed 5–3–00; 8:45 am]

BILLING CODE 6712–01–P

DEPARTMENT OF THE INTERIOR

Fish and Wildlife Service

50 CFR Part 17

RIN 1018–AD67

Endangered and Threatened Wildlife and Plants; Reclassification of Yacare Caiman in South America From Endangered to Threatened, and the Listing of Two Other Caiman Species as Threatened by Reason of Similarity of Appearance

AGENCY: Fish and Wildlife Service, Interior.

ACTION: Final rule.

SUMMARY: The U.S. Fish and Wildlife Service (Service) is reclassifying the yacare caiman (*Caiman yacare;* also known as *Caiman crocodilus yacare*) from its present endangered status to threatened status under the Endangered Species Act because the current endangered listing does not correctly reflect the present status of this species. The Service also is listing the common caiman (*Caiman crocodilus crocodilus*) and the brown caiman (*Caiman crocodilus fuscus*) as threatened by reason of similarity of appearance.

Caiman yacare is native to Argentina, Brazil, Paraguay, and Bolivia. *Caiman crocodilus crocodilus* and *C. c. fuscus* occur in Mexico and Central and South America. All three taxa are listed in Appendix II of the Convention on International Trade in Endangered Species of Wild Fauna and Flora (CITES), which allows for international commercial trade in these species. Listing the two taxa as threatened by reason of similarity of appearance will assist in protecting the yacare caiman by facilitating wildlife inspections of shipments at the ports of entry and detection of illegal shipments.

A special rule for these three caiman populations allows U.S. commerce in their skins, other parts, and products from individual countries of origin and countries of re-export if certain conditions are satisfied by those countries prior to exportation to the United States. These conditions largely pertain to the implementation of a CITES Universal Tagging System Resolution for crocodilian skins (adopted at the ninth meeting of the Conference of the Parties) as well as provisions intended to support sustainable management of wild populations of the above three caiman species/subspecies. In the case where tagged caiman skins and other parts are exported to another country, usually for tanning and manufacturing purposes, and the processed skins and finished products are exported to the United States, the rule prohibits importation or re-exportation of such skins, parts, and products if we determine that either the country of origin or re-export is engaging in practices that are detrimental to the conservation of caiman populations.

The purpose of this rule is threefold. First, the rule accurately reflects the conservation status of the yacare caiman. Second, we wish to promote the conservation of the yacare caiman by ensuring proper management of the commercially harvested caiman species in the range countries and, through implementation of trade controls (as described in the CITES Universal Tagging System Resolution), to reduce commingling of caiman specimens. Third, downlisting of *C. yacare* to threatened reconciles listings of the species in the Act and CITES.

EFFECTIVE DATE: This final rule is effective on June 5, 2000.

ADDRESSES: The complete file for this rule is available for public inspection by appointment, from 8:00 a.m. to 4:30 p.m., Monday through Friday, at the Office of Scientific Authority, 4401 N. Fairfax Dr., Room 750, Arlington, Virginia.

FOR FURTHER INFORMATION CONTACT: Dr. Javier Alvarez, Office of Scientific Authority, U.S. Fish and Wildlife Service, Mail Stop ARLSQ–750, Washington, DC 20240 (phone: 703–358–1708; fax: 703–358–2276; e-mail: r9osa@fws.gov).

SUPPLEMENTARY INFORMATION:

Note: Portions of the original proposed rule were re-written to conform to the new Federal policy on the use of ''plain English'' in Federal documents. However, the original intent of the text remains the same. Text in the proposed rule has also been amended in this final rule in response to comments submitted by the public (see ''Comments Received'' below) and to coincide with the CITES Universal Tagging System Resolution.

Background

The yacare caiman was listed as endangered throughout its entire range under the predecessor of the Endangered Species Act (Act) of 1973 on June 2, 1970 (35 FR 8495). (At the time of the original listing, Peru was incorrectly listed as one of the range countries, whereas Paraguay was excluded. In this final rule, we correct that situation.) On July 1, 1975, it was also placed in Appendix II of the Convention on International Trade in Endangered Species of Wild Fauna and Flora—CITES (42 FR 10465). (The species has never been listed in CITES Appendix I, which prohibits international trade in the species if such activity is conducted for primarily commercial purposes and/or determined to be detrimental to the survival of the species.) The endangered listing under the Act prohibited imports and re-exports of the species into/from the United States. However, the Appendix II listing allows for regulated commercial trade elsewhere in the world, based on certain findings. As a result, a substantial U.S. law enforcement problem has occurred because of the different listing status under the Act and under CITES. Imports and re-exports of yacare caiman into/from the United States without an ESA permit are prohibited under the Act, including shipments originating from countries of origin with valid CITES export documents. However, imports and re-exports of products from the common and brown caimans are legal, when accompanied by appropriate CITES documents. Since products manufactured from the yacare caiman, common caiman, and the brown caiman are often indistinguishable as to species from which they are made, products from the prohibited yacare caiman are often commingled with products from non-prohibited taxa among commercial shipments into the United States. The unauthorized entry of prohibited yacare caiman products constitutes a violation of the Act, and if the yacare is legally protected in individual range countries, then Lacey Act violations may also have occurred.

Until relatively recently, Argentina, Bolivia, Brazil, and Paraguay prohibited the export of caiman products (Brazaitis in comments on the October 29, 1990, Federal Register notice [55 FR 43389]). However, CITES Notification to the Parties No. 781, issued on March 10, 1994, indicated that Brazil's CITES Management Authority had registered 75 ranching operations for producing skins of *C. c. crocodilus* and *C. yacare*. These ranching operations were established under provisions of Article 6 B of Brazilian Wildlife Law No. 5.197, of November 3, 1967. *Caiman yacare* from these Brazilian ranches were being legally traded in the international

marketplace, except into the United States. Paraguay and Bolivia have also expressed an interest in the legal international marketing of *C. yacare* skins, and restricted legal hunts are currently allowed (see below).

The U.S. Fish and Wildlife Service (Service) recognizes that substantial populations of crocodilians that are managed as a sustainable resource can be utilized for commercial purposes while not adversely affecting the survival of individual populations of the species, when scientifically based management plans are implemented. When certain positive conservation conditions have been met, the Service has acted to allow utilization and trade from managed populations of the American alligator (*Alligator mississippiensis*), the importation of commercial shipments of Nile crocodile (*Crocodylus niloticus*) from several southern and eastern African countries, and similar shipments of saltwater crocodile (*Crocodylus porosus*) specimens from Australia (61 *FR* 32356; June 24, 1996). The CITES Parties reviewed management activities prior to transferring certain populations from CITES Appendix I to Appendix II (thereby allowing commercial trade) and included assessments of population status, determination of sustainable harvest quotas (or approval of ranching programs), and the control of the illegal harvest. Management regulations imposed after harvest included the tagging of skins and issuance of permits to satisfy the requirements for CITES Appendix II species.

This final rule and its accompanying special rule allow U.S. commerce in skins, other parts, and products from *Caiman yacare*, *Caiman crocodilus crocodilus*, and *C. c. fuscus* into the United States. These three *Caiman* populations are widespread in Mexico and Central and South America, and have high reproductive potential (Thorbjarnarson 1992, Thorbjarnarson 1994). In fact, they have survived in spite of substantial legal and illegal harvests in the past (Mourao *et al.* 1996, Da Silveria and Thorbjarnarson 1999). As in the case of the final rules involving *Alligator mississippiensis*, *Crocodylus niloticus*, and *Crocodylus porosus* (50 CFR part 17), this final rule will allow commerce in *Caiman yacare*, *Caiman c. crocodilus*, and *C. c. fuscus* into the United States only from range countries that regulate the legal harvest and control illegal trade of these three populations, so as to ensure that they are being sustained at biologically sound levels. Furthermore, the Service does not intend to allow importation or re-exportation of *Caiman yacare*, *C. crocodilus crocodilus*, or *C. c. fuscus* specimens from intermediary countries that do not properly control trade in crocodilian skins, other parts, and products.

This rule reclassifies the yacare caiman (*Caiman yacare* = *C. crocodilus yacare*) from endangered to threatened status under the Act and lists two additional taxa, the common caiman (*C. c. crocodilus*) and the brown caiman (*C. c. fuscus* including *C. crocodilus chiapasius*), as threatened by reason of similarity of appearance. When traded as skin pieces and products, the yacare caiman is similar in appearance to the common caiman and the brown caiman, which are listed as CITES Appendix II species but are not listed in the Act. Other caiman species will be retained as endangered under the Act, including the black caiman (*Melanosuchus niger*) and the broad-snouted caiman (*Caiman latirostris*). This rule does not affect the endangered or threatened status, under the Act, of any other crocodilian species in the Western Hemisphere.

The original listing for the yacare caiman (under the provisions of the Endangered Species Conservation Act of 1969) was *C. yacare*, which is the presently accepted taxonomic name for the species (King and Burke 1989) and the name used throughout this rule. Some authors treat the taxon as a subspecies, *C. c. yacare*, and this is the taxonomic name presently included in the List of Endangered and Threatened Wildlife (50 CFR part 17.11). King believes (in litt.) that *C. yacare* should be considered biologically as a subspecies or at the end of a morphological cline, but indicates that, nomenclaturally, it is recognized as a full species. A recent study, including an analysis of mitochondrial DNA variation, indicates that the *C. yacare* of Argentina, Bolivia, Brazil, and Paraguay comprise a single taxonomic unit with substantial genetic, morphological, and zoogeographical similarities (Brazaitis *et al.* 1993). Those authors indicate that *C. yacare* populations are effectively separated from *C. c. crocodilus* populations by mountains and highlands that limit nesting habitat and the migration of individual animals between southern and northern river systems. *Caiman yacare*, *C. c. crocodilus*, and *C. c. fuscus* are considered, on the basis of their DNA sequences, to be distinct populations of a widespread and related taxon (Amato 1992) with *C. yacare* apparently having greater genetic differences from *C. c. crocodilus* than *C. c. crocodilus* has in relationship to *C. c. fuscus* (Brazaitis *et al.* 1993). Additional DNA analyses by Brazaitis and others support the interpretation that ''*Caiman yacare, C. c. crocodilus*, and *C. c. chiapasius* (probably *C. c. fuscus*) are each phylogenetic species, as per the criteria of Davis and Nixon (1992)'' (Brazaitis *et al.* 1997a, Brazaitis *et al.* 1997b). However, recent work by Busack and Pandya (1996) suggests that *C. c. crocodilus* and *C. c. fuscus* comprise a single genetic population at the subspecies level, while confirming that the yacare caiman is a distinct subspecies, *C. c. yacare*. Currently, no biochemical evidence indicates that recognizable subgroups of *C. yacare* occur within its distributional limits in the river systems of Argentina, Bolivia, Brazil, or Paraguay (Brazaitis *et al.* 1993), and, therefore, no such subgroups are recognized in this rule.

Comments Received

On March 15, 1988, the Service received a petition from Mr. Armand S. Bennett, President of Columbia Impex Corporation, requesting the reclassification of the yacare caiman from endangered to threatened status. The Service reviewed the petition and concluded that it did not present sufficient scientific or commercial information to indicate that a reclassification was warranted (55 FR 43387, published October 29, 1990). However, the Service, in the October 29, 1990, **Federal Register** notice, also solicited relevant data, comments, and publications dealing with the current status and distribution, biological information, and conservation measures pertaining to the yacare caiman. The Service also requested comments about the advisability and necessity of treating the subspecies *C. c. crocodilus* and *C. c. fuscus* as endangered or threatened due to similarity of appearance to the listed *C. yacare.* Based on the information received in response to the **Federal Register** notice and other available information, the Service published on September 23, 1998, a proposed rule for the reclassification of the yacare caiman from endangered to threatened, with a special rule allowing U.S. commerce in skins, other parts, and products of this species. The Service also proposed listing the common caiman (*C. c. crocodilus*) and the brown caiman (*C. c. fuscus*) as threatened by reason of similarity of appearance.

We received a total of 26 comments in response to the September 23, 1998, proposed rule: 6 were from crocodilian experts, 11 from foreign governments and institutions (Argentina, Bolivia, Brazil, Colombia, Paraguay, and Singapore), 1 from a State government (Louisiana), 6 from the crocodile trade industry (2 based in the United States

and 4 foreign), and 2 from non-governmental organizations (World Wildlife Fund and The Humane Society of the United States).

In summary, the majority of foreign government correspondents (Argentina, Bolivia, Brazil, and Colombia) and World Wildlife Fund supported the downlisting of yacare caiman. Likewise, five of the six correspondents from the crocodile trade industry in the United States (Columbia Impex Corporation, Florida) and overseas (Tecno—Caiman Ltd., Argentina; Cooperative of Caiman Breeders from the Pantanal of Mato Grosso, Brazil; Colombian Association of Animal Ranchers; and Singapore Reptile Skin Trade Association) supported the proposed downlisting. However, the Humane Society of the United States opposed it. The Government of Paraguay considered that the original listing of yacare caiman as endangered was unwarranted, and, therefore, commented that the species should be removed form the Act.

Comments from various crocodilian experts, including five members of The World Conservation Union/Species Survival Commission (IUCN/SSC) Crocodile Specialist Group (CSG), were mixed. Dr. James Perran Ross (CSG Executive Officer), Mr. Alejandro Larriera (CSG Regional Vice Chairman for Latin America and Caribbean), and Mr. Tomas Waller (CSG member from Argentina), supported the proposed downlisting of yacare caiman to threatened. Mr. Ted Joanen (CSG Vice Chairman for North America) and Mr. Peter Brazaitis (Forensic Specialist in Herpetology) opposed the proposed downlisting, whereas Prof. F. Wayne King (CSG Deputy Chairman) considered that the original listing of yacare caiman as endangered was unwarranted. The Department of Wildlife and Fisheries of Louisiana partially supported the proposed downlisting.

Comments: The Governments of Argentina (Secretaria de Recursos Naturales y Desarrollo Sustentable—Secretary of Natural Resources and Sustainable Development), Bolivia (Vice-Ministerio de Medio Ambiente, Recursos Naturales y Desarrollo Forestal, Ministerio de Desarrollo Sostenible y Planificacion—Vice-Ministry of the Environment, Natural Resources and Forestry Development, Ministry of Sustainable Development and Planning; Unidad de Recursos Naturales y Medio Ambiente, Prefectura y Comandancia General del Beni—Natural Resources and Environment Unit, Government of the Department of Beni; Museo Nacional de Historia Nacional—National Museum of Natural History; Museo de Historia Natural, Universidad Autonoma Gabriel Rene Moreno—Museum of Natural History, Gabriel Rene Moreno Autonomous University), Brazil (Instituto Brasileiro de Meio Ambiente e dos Recursos Naturais Renovaveis—Institute of the Environment and Renewable Natural Resources; and Brazilian Embassy in Washington, DC), and Colombia (Ministerio del Medio Ambiente—Ministry of the Environment) commented that yacare caiman is abundant or has recovered in their respective countries, and, therefore, supported the proposed downlisting of yacare caiman. Argentina supports downlisting of *C. yacare*, even though it bans export of the species. All four countries (three of which are yacare caiman range countries) believe that the opening of commerce in *C. yacare* products, through a special rule allowing commercial importation and re-exportation of yacare caiman specimens into/from the United States, will provide an economic incentive for the protection of the species throughout its range.

Prof. F. Wayne King, Dr. James Perran Ross, and Mr. Tomas Waller (all members of CSG) also considered the yacare caiman to be abundant throughout most of its range. Furthermore, they argued that enough national and international regulatory and management mechanisms (such as CITES) are in place in the range countries, so that illegal harvest no longer constitutes a major threat to the species.

Finally, based on recent field surveys, World Wildlife Fund also did not consider *C. yacare* to be threatened. Furthermore, they recognized that the proposed downlisting and special rule will help reconcile listings of yacare caiman in the Act and CITES.

Response: We continue to believe that the downlisting of yacare caiman from endangered to threatened, with a special rule allowing U.S. commerce in caiman skins, other parts, and products, is warranted (See ''Summary of Factors Affecting *Caiman yacare*'' below).

Comment: Prof. F. Wayne King, Dr. John Perran Ross, and the Government of Paraguay (Ministry of Agriculture and Cattle Ranching) considered *C. yacare* to be abundant enough in the wild to prompt its complete removal from the Act.

Response: Although wild populations of yacare caiman have recovered in portions of the species' range, we note that some populations have not fully recovered, and, therefore, we continue to believe the threatened classification is appropriate (See ''Summary of Factors Affecting *Caiman yacare*'' below).

Comments: Mr. Ted Joanen, Mr. Peter Brazaitis, the Department of Wildlife and Fisheries of Louisiana, and The Humane Society of the United States opposed the proposed special rule allowing U.S. commerce in skins, parts, and products of yacare caiman because of concerns about current management of the species in some range countries. They argued that some range countries lack protected habitats, long-term monitoring programs, effective national legislation, or effective national law enforcement to prevent uncontrolled harvest of the species.

To address those concerns, Mr. Joanen and Dr. John Perran Ross suggested that importation of *C. yacare* specimens from individual range countries not be allowed until these countries provide the Service with detailed written descriptions of their respective management plans, regulations, and ongoing studies for the species, as was requested in previous rules involving Australian saltwater crocodile, American alligator, and Nile crocodile. Likewise, the National Museum of Natural History of Bolivia recommended amending the special rule, so as to require that all skins allowed for import into the United States originate from populations under a sustainable use management plan, such as the one developed in Bolivia. Bolivia believes that this requirement will prevent the sale of illegally hunted crocodilian skins that are seized by government agencies, but legalized through government-sponsored auctions.

Response: We note that enforcement of domestic regulations pertaining to harvest of wild yacare caimans is a domestic issue. No government or agency provides perfect management, but many governments and agencies provide sufficient management to permit sustainable use of certain individual species. A reasonable standard for the Service to use to determine sufficiency of a wildlife management program in any country is to compare management of a foreign species with management in the United States. In the United States, poaching of white-tailed deer still occurs, despite strict State laws regulating hunting of the species. However, State enforcement of deer hunting laws is sufficient to continue allowing sustainable harvest of the species.

Similarly, although all range countries of yacare caiman regulate the harvest of the species, they are not always capable of enforcing such regulations, particularly in isolated areas. Although we acknowledge that illegal hunting of

yacare caiman for local trade still occurs in many of the species' range countries, international illegal trade in crocodilian skins has been reduced significantly since the adoption by CITES Parties of Resolution Conf. 9.22 on the Universal Tagging System Resolution for crocodilians in November 1994 (see ''Inadequacy of existing regulatory mechanisms'' below). Given that all four range countries (Argentina, Bolivia, Brazil, and Paraguay) are CITES Parties, we believe that international trade in yacare caiman is adequately regulated to allow commercial importation and re-exportation of yacare caiman into/from the United States.

Furthermore, *C. yacare* and other species of caiman appear to be resilient to hunting. In Brazil, the impact of hunting on caiman populations is reduced by strong bias for males among hunted animals (Mourao *et al.* 1996, Da Silveria and Thorbjarnarson 1999). In *C. yacare* and *C. crocodilus,* this bias is largely due to the fact that hunters target mostly the largest animals, which are almost exclusively males. In the case of black caiman (*Melanosuchus niger;* a species listed as endangered in the Act), male-biased sex ratios among harvested animals appear to be caused by preference of adult females for more protected and difficult to reach areas. Since a single male can fertilize several females, this male-biased harvest is less likely to have a negative impact on the reproductive potential of caiman populations. Impact of hunting on caiman is also reduced by propensity of hunters to concentrate their harvest in areas easily accessible (Mourao *et al.* 1996).

In anticipation to a possible increase in illegal harvest of yacare caiman, this rule contains language prohibiting importation or re-exportation of yacare caiman skins, other parts, or products, if we obtain reliable information indicating that the countries of origin or re-export are engaging in practices that are detrimental to the conservation of yacare caiman populations in the wild.

Nevertheless, we agree with the suggestion made by several correspondents of requesting updated information from the yacare caiman range countries regarding their respective management plans, regulations, and ongoing studies for the species. Maintenance of such information in our files would permit us and other interested parties to better understand the measures being taken by range countries to ensure that harvest of yacare caiman is done in a sustainable manner. Furthermore, submission of such information by range countries on a regular basis would allow us to monitor the status of yacare caiman in the wild, as required under the Act. Therefore, we have added language in this final rule requesting that the range countries of *C. yacare* (Argentina, Bolivia, Brazil, Paraguay) provide to the Service every 2 years current information on the status of these taxa in their countries (see ''The Monitoring of Yacare Caiman'' below). We will also monitor trade in the species by requesting import and export data on *C. yacare* from the World Conservation Monitoring Centre (WCMC), a repository of the annual CITES reports prepared and submitted to the Secretariat by CITES Parties.

Comments: Mr. Alejandro Larriera and the Colombian Association of Animal Ranchers (AZOOCOL) supported the right of the United States to prohibit imports from countries not in compliance with the CITES Universal Tagging System Resolution or engaging in practices detrimental to the survival of the species. However, the Singapore Reptile Skin Trade Association expressed concerns about unilateral U.S. prohibition of crocodilian imports from countries not in compliance with CITES requirements. Columbia Impex Corporation also commented that the United States should never have regulations different than those set by other countries.

Response: We note that Article XV of CITES allows CITES Parties to ''adopt stricter domestic measures'' regulating trade, taking, possession, or transport of specimens of any species, regardless of whether the species is listed in the CITES Appendices or not. For example, some CITES Parties currently prohibit the export of all their native species (Australia) or require permits for the export of any of their native wildlife (Mexico and Brazil), even though many of the species are not listed in the CITES Appendices. In the United States, Congress has enacted several laws for the protection of native and foreign wildlife (including the African Elephant Conservation Act, Eagle Protection Act, Marine Mammal Protection Act, Migratory Bird Treat Act, Wild Bird Conservation Act, Rhinoceros and Tiger Conservation Act, and the Endangered Species Act), many of which impose stricter restrictions on trade of certain species compared to CITES. Thus, adoption of this rule is in no way contrary to the CITES treaty.

Comment: Prof. King and Dr. Ross expressed concern about unilateral prohibition of yacare caiman imports from countries not in compliance with the CITES Universal Tagging System Resolution based on ''information from * * * other reliable resources'.

Response: We agree that any decision regarding possible U.S. unilateral prohibition of yacare caiman imports or re-exports from countries not in compliance with the CITES Universal Tagging System Resolution should be based on the best available information. As recommended by Dr. Ross, we intend to consult with experts within and outside our agency (such as the Service's National Fish and Wildlife Forensics Laboratory, university and natural history museum researchers, and IUCN Crocodile Specialist Group), the Management and Scientific Authorities of other countries, and any other qualified persons prior to making a final determination related to the possible prohibition of yacare caiman imports from any country.

Comments: Mr. Ted Joanen and Mr. Peter Brazaitis expressed concern about implementation of the proposed rule by the Service, particularly since most caiman skins imported into the United States arrive in the form of manufactured products, which are not marked, and, therefore, difficult to identify. Mr. Brazaitis also commented that Federal regulations do not require tamper-proof identification tags on crocodile skins for importation.

Response: We consider that international illegal trade in crocodilian skins has been reduced significantly since the adoption of Resolution Conf. 9.22 (Universal Tagging System Resolution) by CITES Parties. Therefore, requiring that yacare caiman shipments imported into the United States be accompanied by proper CITES documentation, as described in this rule, diminishes the likelihood of importing yacare caiman specimens obtained in a manner detrimental to the species. Furthermore, by allowing U.S. commerce in yacare caiman, we eliminate the incentive to intentionally misidentify yacare caiman specimens for importation into the United States. Consequently, we will be able to gather more accurate trade data on the species. At this time, the CITES Universal Tagging System Resolution is codified in the Federal regulations just for *Alligator mississippiensis, Crocodylus niloticus,* and *Crocodylus porosus.* However, we are currently in the process of updating the U.S. Code of Federal Regulations to include language codifying the CITES Universal Tagging System Resolution for all crocodilians (see **Federal Register** notice 62 FR 42093, published on August 5, 1997). In the meantime, the language contained in this rule implements the CITES Universal Tagging System Resolution for shipments involving *C. yacare, C. crocodilus fuscus,* and *C. c. crocodilus.*

Comment: The Humane Society of the United States supported the listing of *C. crocodilus fuscus* and *C. c. crocodilus* as threatened because of similarity of appearance, as well as the conditions in the special rule. However, Strictly Reptiles, Inc., opposed listing of *C. c. fuscus* and *C. c. crocodilus* because of similarity of appearance, since it believes that *C. yacare, C. c. fuscus,* and *C. c. crocodilus* are easily distinguishable. Columbia Impex Corporation also commented that *C. c. fuscus* and *C. c. crocodilus* are easily distinguishable once skins are tanned, whereas the Government of Paraguay commented that as long as skins are properly tagged and accompanied by CITES permits, there is no chance for misidentification of shipments involving *C. yacare, C. c. fuscus,* and *C. c. crocodilus.*

Response: Controversy still exists as to whether *C. yacare, C. c. fuscus* and *C. c. crocodilus* can be distinguished using morphological characters. Listing of *C. c. fuscus,* and *C. c. crocodilus* because of similarity of appearance will bring *C. yacare* and all known subspecies of *C. crocodilus* under the Act (*C. c. apaporiensis* is already listed as endangered) and, therefore, will facilitate and expedite inspection of *C. crocodilus* and *C. yacare* shipments into the United States. Wildlife inspectors at the ports will no longer face the time-consuming and difficult task of examining individual *C. crocodilus* and *C. yacare* shipments to determine whether or not they involve protected species and/or subspecies, as all shipments involving these two taxa will be treated equally.

Comment: The Government of Colombia and the Singapore Reptile Skin Trade Association commented that listing of *C. c. fuscus* and *C. c. crocodilus* will make trade in these two subspecies more difficult because of the need for permits and inspections. Likewise, the Colombian Association of Animal Ranchers (AZOOCOL) opposed listing of *C. c. fuscus* and *C. c. crocodilus* because of similarity of appearance because they believe that such listing will punish sustainable use of *C. crocodilus* in Colombia.

Response: As noted by the IUCN Crocodile Specialist Group in their October 1998—December 1998 newsletter (Volume 17, Number 4, pages 15–18), the listing of *C. c. fuscus* and *C. c. crocodilus* as threatened by similarity of appearance does not add any new requirements to those already in place for the importation and re-exportation of skins, other parts, and products of these two subspecies into/from the United States. Since *C. c. fuscus* and *C. c. crocodilus* are currently listed in Appendix II of CITES, a CITES permit issued by the exporting country is already required for importation of skins, parts, and products of these two subspecies into another country. This rule only requires that shipments involving skins and other parts of *C. c. fuscus* and *C. c. crocodilus* be tagged in accordance with the CITES Universal Tagging System Resolution and accompanied by valid CITES documents, as is currently required. Furthermore, inclusion of these two subspecies just codifies in the U.S. Federal regulations an existing international requirement.

However, this special rule does not cover the importation of viable caiman eggs or live caimans into the United States. In addition to a valid CITES export permit (already required), importation of these two types of specimens of *C. c. fuscus* and *C. c. crocodilus* will require an Endangered Species Act import permit. This requirement will allow scrutiny of individual applications for importation of live caimans or eggs so as to prevent accidental introduction of these exotic species into the United States (in accordance with Executive Order 13112 on Invasive Species issued by President Bill Clinton on February 3, 1999), an event that may have negative economic and ecological impacts on humans, native wildlife, and ecosystems in the United States.

Comments: Dr. John Perran Ross, the Singapore Reptile Skin Trade Association, and the Governments of Colombia and Singapore commented on the 25 percent restriction on replacement tags and opposed the measure. Dr. Ross and the Singapore Reptile Skin Trade Association noted that the special rule goes beyond CITES restrictions on replacement tags (Resolution Conf. 9.22), which the United States helped draft. The Government of Colombia considered this restriction an indication of mistrust of range and re-exporting countries. The Government of Singapore and the Singapore Reptile Skin Trade Association commented that, since tanneries regularly removed tags from raw skins before processing them, the 25 percent restriction will create problems for skin traders in their country. Singapore made two suggestions to resolve this issue: (1) shipments involving re-tagged skins must include all tags from the country of origin, and (2) re-exporting countries should fax copies of their re-export CITES permits as well as the CITES permits from the country of origin.

Response: As noted above, Article XV of CITES allows for CITES Parties to adopt stricter domestic regulations for the protection of wildlife, whether the species is listed in the CITES Appendices or not. Therefore, adoption of this rule is not contrary to CITES. Moreover, this 25 percent restriction on replacement tags is consistent with the requirements for importation of saltwater crocodile (*Crocodylus porosus*) and Nile crocodile (*Crocodylus niloticus*) published in the **Federal Register** on June 24, 1996 (61 FR 32356—''Endangered and Threatened Wildlife and Plants; Reclassification of Saltwater Crocodile Population in Australia From Endangered to Threatened With Special Rule for the Saltwater and Nile Crocodiles'').

Summary of Factors Affecting Caiman yacare

Section 4(a)(1) of the Act (16 U.S.C. 1531 *et seq.*) and regulations promulgated to implement the listing provisions of the Act (50 CFR part 424) set forth five criteria to be used in determining whether to add, reclassify, or remove a species from the list of endangered and threatened species. These factors and their applicability to populations of the yacare caiman in South America are as follows:

A. The Present or Threatened Destruction, Modification, or Curtailment of Its Habitat or Range

Since the initial listing of the yacare caiman, controversy has been associated with defining the ranges of caiman species, especially that of *C. yacare* in southern South America. To assist in the clarification of the distribution and status of *C. yacare,* the CITES Secretariat, in conjunction with the World Conservation Union/Species Survival Commission (IUCN/SSC) Crocodile Specialist Group (CSG), undertook a survey (starting in late 1986 and early 1987) to develop a conservation program for crocodilians of the genus *Caiman.* These surveys were conducted under the auspices of CITES and were carried out by the CSG and the Governments of Brazil, Bolivia, and Paraguay. We review the available data from these studies (Brazaitis 1989a; Brazaitis *et al.* 1990; King and Vıdez Roca 1989; and Scott *et al.* 1988 and 1990) on the distribution, ecology, and status of *C. yacare* in this and following sections assessing factors affecting the species.

Caiman yacare is widely distributed throughout the lowland areas and river systems of northeastern Argentina, southeastern and northern Bolivia, Paraguay, and the western regions of the

Brazilian States of Rondonia, Mato Grosso, and Mato Grosso do Sul (Thorbjarnarson, J. B. 1992). The range includes the entire Guapore River (= Itenes River) drainage, including its headwaters in the Brazilian State of Mato Grosso and its tributaries in northeastern Bolivia; eastern Bolivia and western Brazil throughout the drainage of the Paraguay River and the Pantanal of Brazil; Paraguay River and southern Pilcomayo River in Paraguay; and the lower Salado River, the Parana River east to the Uruguay River, and south to the mouth of the Parana River in Argentina (Brazaitis *et al.* 1993). The yacare caiman is found in a wide variety of habitats, including those that are altered by humans. The species occurs in vegetated and non-vegetated large open rivers, secondary rivers and streams, flooded lowlands and forests, roadside ditches and canals, oxbows, large and small lakes and ponds, cattle ponds, and streams (Brazaitis *et al.* 1988).

The common caiman, *Caiman crocodilus crocodilus,* occurs in the drainage basins of the Amazon and Orinoco Rivers in French Guiana, Surinam, Guyana, Venezuela, eastern Ecuador, Colombia, Peru, and Brazil (Thorbjarnarson 1992). A narrow zone of intergradation exists between *C. yacare* and *C. c. crocodilus* along the northern border of Bolivia and Brazil in the State of Acre in the Acre River and Abuna drainages, northward to approximately Humaita on the Madeira River in the Brazilian State of Amazonas (Brazaitis *et al.* 1990).

The brown caiman, *Caiman crocodilus fuscus* (including *C. c. chiapasius*), occurs from Mexico through Central America to Colombia (west of the Andes), along the coastal and western regions of Venezuela, and south through Ecuador to the northwestern border of Peru. The CITES Secretariat and several authors consider *C. c. chiapasius* a synonym of *C. c. fuscus,* and we consider it so for the purposes of this rule.

The expansion of cattle grazing and the concurrent construction of permanent water sources for cattle has increased the dry season freshwater habitats available to yacare caiman in some areas. However, cattle grazing has also diminished habitat in other areas by increasing the salinity of waterways (King *et al.* 1994). Habitat destruction and deterioration has taken place and continues to occur in parts of the species' range. Deforestation for road construction and mining not only destroys habitat, but also increases access of poachers to some yacare habitats (Brazaitis *et al.* 1996). Increasing human populations, development of hydroelectric projects, draining of wetlands, and deteriorating water quality due to siltation or the extensive dumping of pollutants (particularly as a result of mining and industry) also have caused habitat degradation. However, yacare caiman habitat is very extensive and the species is so widespread that it is very unlikely that the species is presently endangered or threatened because of the destruction, modification, or curtailment of its habitat or range.

B. Overutilization for Commercial, Recreational, Scientific, or Educational Purposes

In the past, large numbers of *C. yacare* were taken from South America, particularly from Brazil, in violation of domestic laws protecting the species (Brazaitis *et al.* 1988, Brazaitis *et al.* 1996). Although yacare caiman populations declined in many areas, the species still could be found in varying population densities in most areas where suitable habitat remained (Brazaitis *et al.* 1988). Yacare caiman found in some surveys almost a decade ago also were small, extremely wary, and exhibited a high male-biased sex ratio. One hypothesis suggested that females might be more heavily harvested at a time when they might be very vulnerable while protecting their nests (Brazaitis 1989a).

In spite of substantial legal and illegal harvests in the past, many caiman populations have been able to survive and recover after being protected or properly managed (Mourao *et al.* 1996, Da Silveria and Thorbjarnarson 1999). Recent research also suggests that C. yacare and other species of caiman in Brazil, and most likely other parts of the species' range, are resilient to hunting. Recent estimates of *C. yacare* in the Brazilian Pantanal show densities as high as 147 individuals/square kilometer, far larger than those reported for other crocodilians (Coutinho and Campos 1996). In Brazil, the impact of hunting on caiman populations is reduced by strong bias for males among hunted animals (Mourao *et al.* 1996, Da Silveria and Thorbjarnarson 1999). In *C. yacare* and *C. crocodilus,* this bias appears to be largely due to the fact that hunters target mostly the largest animals, which are almost exclusively males. In the case of black caiman (*Melanosuchus niger;* a species listed as endangered under the Act), male-biased sex ratios among harvested animals appear to be caused by preference of adult females for more protected and difficult to reach areas. Since a single male can fertilize several females, this male-biased harvest is less likely to have a negative impact on the reproductive potential of caiman populations. Impact of hunting is also reduced by propensity of hunters to concentrate their harvest on areas that are easily accessible (Mourao *et al.* 1996).

To ensure sustainable management of *C. yacare* in Brazil, the Instituto Brasileiro de Meio Ambiente e dos Recursos Naturais Renovaveis (IBAMA—Brazilian Institute for Environment and Renewable Natural Resources) regulates commerce of *C. yacare.* To date, IBAMA has approved and registered 65 yacare breeding facilities, with a production of over 80,000 skins (communication from the Embassy of Brazil, Washington, DC). In recent months, IBAMA has also teamed up with other Brazilian Federal and State government agencies to help enforce Brazilian laws for the protection of wildlife, thus reducing illegal trade of all native wildlife in Brazil.

The yacare caiman remains widely distributed in Bolivia (communications from Unidad de Recursos Naturales y Medio Ambiente, Prefectura y Comandancia General del Beni, Bolivia—Natural Resources and Environment Unit of the Department of Beni; Museo Nacional de Historia Nacional, La Paz, Bolivia—National Museum of Natural History; Museo de Historia Natural, Universidad Autonoma Gabriel Rene Moreno, Santa Cruz, Bolivia—Natural History Museum, Gabriel Rene Moreno Autonomous University; and Viceministro de Medio Ambiente, Recursos Naturales y Desarrollo Forestal, Ministerio de Desarrollo Sostenible y Planificacion, La Paz, Bolivia—Vice-Minister of the Environment, Natural Resources and Forestry Development, Ministry of Sustainable Development and Planning). Although caiman populations in some rivers were extirpated, caimans still survive in Bolivia due to abundant habitat and their rapid growth to sexual maturity. Where protected, populations have recovered, including those in the extensive wetlands of ''El Pantanal''. In fact, the Bolivian Red Book lists *C. yacare* as a low-risk species (communication with Dr. Mario Suarez, Director of the Museo de Historia Natural, Universidad Autonoma Gabriel Rene Moreno, Santa Cruz, Bolivia—Natural History Museum, Gabriel Rene Moreno Autonomous University). Consequently, Bolivia has recently approved conservation and sustainable use plans for *C. yacare* in the Departments of Beni and Santa Cruz. Although a decade ago it was reported that the long-term continuation of the

status quo could lead to the endangerment of the species in Bolivia (King and Videz Roca 1989), we believe that situation has improved considerably, with effective management of the species by Bolivian authorities.

In Paraguay, King *et al.* (1994) reported that large populations of yacare could still be found in suitable habitats. *Caiman yacare* populations in Paraguay are currently being monitored annually (communications with Ministerio de Agricultura y Ganadería—Ministry of Agriculture and Cattle Ranching, Paraguay's CITES Authority). Recent surveys show that populations are either stable or increasing. Based on survey data, hunting quotas are established accordingly.

The CSG did not conduct a survey and status assessment in Argentina. However, Argentina currently bans export of the species (communication with Secretaria de Recursos Naturales y Desarrollo Sustentable—Ministry of Natural Resources and Sustainable Development).

In summary, hunting for hides, both legal and illegal, has in the past been the major threat to the survival of populations of yacare caiman. However, the species has recovered in many parts of its range, and the four range countries either provide protection to the species by domestic legislation and/or regulate harvest by established hunting seasons and limits on the size of animals that can be legally killed for commercial trade. In spite of these actions, we believe sufficient cause exists to find, at this time, that some populations of the yacare caiman still may be threatened by illegal hunting for domestic trade in portions of its extensive range (see ''Inadequacy of existing regulatory mechanisms'' below).

C. Disease or Predation

The eggs of *C. yacare* are eaten by a variety of predators, which in some localities include humans, and hatchlings are consumed by a variety of predators including other crocodilians. However, we have no evidence, at this time, that disease or predation are significant factors affecting *C. yacare* populations.

D. The Inadequacy of Existing Regulatory Mechanisms

The yacare caiman is protected in Argentina by a total ban on commercial hunting and on the export of raw and tanned hides and other products. Brazil bans the export of wildlife and wildlife products from native species (Article 6 B of Brazilian Wildlife Law No. 5.197, of November 3, 1967), except from approved ranching programs. In Paraguay, the yacare caiman was nominally protected by a 1961 Presidential decree that prohibits hunting, commerce, and import and export of all native wildlife, their parts, and products. However, a limited harvest of yacare caiman is currently allowed, with quotas being determined based on annual surveys of the species. Bolivia permits the hunting of yacare from January 1 to June 30, and imposes a 1.5 m size limit on all harvested caiman. The yacare was additionally listed as endangered under the U.S. Endangered Species Conservation Act of 1969 and was added to Appendix II of CITES in 1975.

In the past, existing legislation and decrees protecting the yacare caiman or regulating its harvest have been inadequately or unevenly enforced. Many yacare caiman were apparently illegally killed in Argentina, Bolivia, Brazil, and Paraguay, and their skins were illegally exported with real or forged CITES export permits from some South American countries. The CITES Secretariat, in conjunction with the CSG, and with the permission and cooperation of the range countries, conducted a series of surveys of the status of the yacare caiman during the 1980s and found major inadequacies associated with the existing regulatory mechanisms. For example, Bolivia did not effectively enforce either the hunting season restriction or the minimum size limit restrictions on harvested animals. In the mid-1980s, large numbers of poached yacare caiman skins were illegally exported to Paraguay, encouraging the transnational movement of illegal wildlife products through that country in violation of CITES. As a result, in June 1986 and to November 1987, the Bolivian Government imposed a ban on the export of wildlife specimens (Decreto Supremo 21312 and Decreto Supremo 21774, respectively) and, through the CITES Secretariat, asked that the Parties to the Convention no longer accept certain CITES export permits issued illegally by the former Bolivian Government (Notice of Information No. 3–50 FR 34016; Notice of Information No. 4–50 FR 34016; Notice of Information No. 8–50 FR 50965; Notice of Information No. 11–51 FR 43978).

Some countries of manufacture, knowingly or unknowingly, have also apparently accepted illegally killed and illegally exported yacare caiman, used these materials in the production of leather goods, and shipped the resulting finished products to the United States. Although a live or whole yacare caiman can be distinguished from other caiman species, the products from tanned or processed skins are often very difficult to distinguish from other caiman species. U.S. Fish and Wildlife Service Wildlife Inspectors, by clearing crocodilian products from these leather good manufacturing countries, could have inadvertently allowed the import of parts and products from illegally harvested yacare caiman. Such imports would constitute violations of the U.S. Lacey Act and the Endangered Species Act, and would be detrimental to the conservation of the yacare caiman by not effectively promoting the sustainable management of the species.

However, currently available information indicates that many of the irregularities have been corrected since the CITES survey in the 1980s. A combination of increased awareness of conservation needs, reduced crocodilian hide prices, increased action by government and international agencies, and increased difficulty in marketing illegally harvested crocodilian skins have relieved some of the hunting pressure on wild caiman populations (Scott *et al.* 1990, King *et al.* 1994).

International illegal trade in crocodilian skins has been reduced significantly since the adoption by the CITES Parties of Resolution Conf. 9.22 (Universal Tagging System Resolution for the Identification of Crocodilian Skins) in November 1994. This resolution establishes an universal tagging system for the tracking of international trade in crocodilian skins, other parts, and products, which includes: (1) Universal tagging of raw and processed crocodilian skins with non-reusable tags for all crocodilian skins entering international trade, unless they have been further processed and cut into smaller pieces; (2) tagging of transparent containers for crocodilian parts; (3) use of non-reusable tags that include as a minimum the International Organization for Standardization two-letter code for the country of origin, a unique serial identification number, a standard species code, and the year of production or harvest; (4) registration of such non-reusable tags with the CITES Secretariat; (5) recording of the same information that appears on the tags on the export permit, re-export certificate, or other Convention document; and (6) implementation by the re-exporting countries of an administrative system that allows for effective matching of imports and re-exports, and ensures that the original tags are intact upon re-export, and, if tags are broken, the re-tagging of skins is performed as described in CITES Resolution Conf. 9.22. Given that all four range countries are Parties to CITES (Argentina acceded

on April 8, 1981; Bolivia on October 4, 1979; Brazil on November 14, 1975; Paraguay on February 13, 1977), we believe that international trade in yacare caiman is adequately regulated.

To improve implementation of CITES, at the invitation of the Bolivian Government and with the financial support of the U.S. Agency for International Development's Partnership for Biodiversity, the Service's Office of Scientific Authority and Division of Law Enforcement visited Bolivia in the summer of 1998 to conduct CITES training. The participants included not only staff from the Bolivian CITES Management and Scientific Authorities, but also representatives from other Bolivian governmental agencies involved in the implementation of CITES, including the Bolivian National Police and Defense Ministry. During the one-week training, the Service also discussed with the participants how to improve collaboration between the United States and Bolivia in the protection and conservation of wildlife. The training participants also took this unique opportunity to develop a plan to implement and coordinate CITES as well as other fish and wildlife enforcement activities in Bolivia.

Although all four range countries have taken steps to curtail illegal international trade in yacare caiman and other crocodilians, enforcement of already existing laws regulating domestic trade in crocodilians may still be insufficient in some areas (Brazaitis *et al.* 1996, Mourao *et al.* 1996), due mostly to the limited resources available to local enforcement agencies as well as the remoteness and inaccessibility of many of the areas. Therefore, we believe that sufficient cause exists to find that the yacare caiman is presently threatened, but no longer endangered, in some parts of its range by the inadequacy of the existing regulatory mechanisms.

E. Other Natural or Manmade Factors Affecting Its Continued Existence

A recent new possible threat to yacare caimans and their habitats is chemical pollution, primarily from mineral mining and industry (Brazaitis *et al.* 1996). However, short-and long-term effects of chemical contamination on yacare caiman populations are unknown.

Summary of Findings

Wildlife, such as the yacare caiman, can be advantageously utilized in commerce if management is sufficient to maintain satisfactory habitats and harvest is at levels that allow maintenance of healthy and sustainable populations. The yacare, under such conditions, can provide revenue to pay for its own management.

In developing this rule, we have carefully assessed the best available biological and conservation status information regarding the past, present, and future threats faced by the yacare caiman. The available data from these studies on the distribution, ecology, and status of *C. yacare* indicate that this species is not endangered or in danger of extinction in any significant portion of its range. The Service has concluded that an extensive population of yacare caiman still exists over large and seasonally inaccessible areas within the four South American range countries.

The Service recognizes that yacare caimans near human populations may be illegally taken. However, the best available information indicates that this and many other species of crocodilians are capable of surviving despite unregulated harvests and that new international requirements are being implemented to curtail international trade in illegally harvested crocodile skins.

Criteria for reclassification of a threatened or endangered species, found in 50 CFR part 424.11(d), include extinction, recovery of the species, or error in the original data for classification. The original listing did not encompass the survey information, such as Medem's 1973 work, which documented an extensive range for this species. Given the reproductive capabilities and current status of the yacare caiman, this species is more properly considered not as in danger of extinction throughout all or a significant portion of its vast range, but as threatened due to inadequately regulated domestic commercialization in some portions of its range. Therefore, if range countries continue to successfully implement measures to regulate its harvest and domestic commercialization, the yacare caiman should be able to maintain stable and sustainable population levels.

Similarity of Appearance

In determining whether to treat a species as endangered or threatened due to similarity of appearance, the Director shall consider the criteria in section 4(e) of the Endangered Species Act. Section 4(e) of the Act and criteria of 50 CFR 17.50 set forth three criteria in determining whether to list a species for reasons of similarity of appearance. These criteria apply to populations of common caiman (*C. c. crocodilus*) in South America and the brown caiman (*C. c. fuscus*) in Mexico and Central and South America.

The Service has intercepted numerous shipments of manufactured items with documents identifying them as a lawfully tradeable Appendix II species (most often *C. c. crocodilus* and *C. c. fuscus*) and have determined that they are, in fact, made from yacare caiman. In other instances, products from other endangered species, such as *Melanosuchus niger,* have been declared as *C. c. fuscus.* One reason for this situation is that many vendors, buyers, and traders in South and Central America have deliberately misidentified yacare caiman by obtaining documents purporting to permit export of other Appendix II species. In addition, representatives of the manufacturing industry and others have indicated that a common practice in the trade is to commingle skins at the tanning, cutting, and assembly stages of the manufacturing process so that inadvertent commingling frequently occurs. While some affirmative yacare caiman identifications can be made in manufactured products, in numerous instances, proper identifications are not made and significant quantities of yacare caiman are probably being imported unlawfully. This situation occurs because a positive identification of yacare caiman depends upon whether certain indicator patterns are present on a piece of skin. However, a large proportion of commercially useful pieces of skins do not bear these identification patterns.

In his comments submitted in response to the October 29, 1990, **Federal Register** notice, Mr. Peter Brazaitis provided extensive information on the similarity of appearance among six caiman and crocodilian species or subspecies as they occur in manufactured products and some hides. He discussed in detail the indicator characteristics for *C. yacare, C. c. crocodilus, C. c. fuscus, C. c. apaporiensis, C. latirostris,* and *M. niger* for live animals, whole skins, and untanned skins that remain after tanning and cutting, and how frequently similar characteristics found on pieces of skin prevent positive identification.

The three criteria for listing of other caiman by similarity of appearance are discussed below:

(1) The degree of difficulty enforcement personnel would have in distinguishing the species, at the point in question, from an endangered or threatened species (including those cases where the criteria for recognition of a species are based on geographical boundaries).

Caiman yacare, C. c. crocodilus, and *C. c. fuscus* are distinguishable as live animals because of different markings

and coloration in the head region. However, manufactured products (shoes, purses, belts, or watchbands, etc.) are extremely difficult even for an expert to identify as to the species of origin (Brazaitis 1989b). Products from the three crocodilians often cannot readily be distinguished by law enforcement personnel, which means that under present conditions mixed products from U.S. listed and unlisted species may occur in U.S. commerce.

(2) The additional threat posed to the endangered or threatened species by loss of control occasioned because of the similarity of appearance.

The inability to adequately control commerce in caiman products has likely allowed losses to occur to other endangered species such as *C. latirostris* and *M. niger.* For example, the Service has records of leather goods manufactured from *M. niger* being included in product shipments declared as *C. c. fuscus.*

Another problem occurs when unlawfully harvested yacare caiman skins enter commerce in non-range South American countries and then are re-exported with documents describing the export as native caiman. The Service has intercepted a number of shipments of yacare caiman from Colombia despite domestic laws that permit only the export of caimans from captive breeding programs, and despite the fact that the yacare caiman does not occur naturally in Colombia.

This rule allows for cessation of commercial trade to the United States if CITES bans are imposed for failure to implement appropriate trade control measures, including the use of non-reusable tags for species identification. A secondary effect of this rule may be to enhance the management of *C. yacare, C. c. crocodilus,* and *C. c. fuscus* to facilitate commerce in products of caiman species that can tolerate a managed commercial harvest, and to more effectively protect the endangered species of caiman or of other taxa that cannot sustain a managed commercial harvest.

(3) The probability that so designating a similar species will substantially facilitate enforcement and further the purposes and policy of the Act.

The Division of Law Enforcement presently inspects caiman shipments to determine the validity of the proffered Appendix II CITES documents and consults herpetologists to evaluate specimens when warranted. Due to the problems of commingling and identification, a substantial number of seizures, forfeitures, and penalty assessments have been contested. Judicial decisions have affirmed the validity of the Service's identifications, but the expenditure of funds and resources is disproportionate to that devoted to other species. An earlier judicial forfeiture action was concluded after 6 years, a full trial, and the employment, by both parties, of several expert witnesses. One of the purposes of this similarity-or-appearance listing is to shift the inquiry from one of evaluating a particular shipment to one of supporting the effectiveness of the CITES crocodilian skin control system as well as the effectiveness of yacare caiman management programs in countries of origin and re-export, thereby enhancing the management of the species while permitting other allocations of enforcement resources.

The improved management of trade should enhance the conservation status of each species, and this listing action and special rule should assist CITES Parties to control the illegal trade in caiman skins, products, and parts.

Available Conservation Measures

Conservation measures provided to species listed as endangered or threatened under the Act include recognition of conservation status, requirements for Federal protection, and prohibitions against certain practices. Recognition through listing encourages and results in conservation actions by Federal, State, and private agencies and groups, and individuals.

Section 7(a) of the Act, as amended, and as implemented by regulations at 50 CFR part 402, requires Federal agencies to evaluate their actions that are to be conducted within the United States or on the high seas, with respect to any species that is proposed to be listed or is listed as endangered or threatened and with respect to its proposed or designated critical habitat, if any is being designated. However, given that *C. yacare* is not native to the United States, no critical habitat is being proposed for designation with this rule.

Currently, with respect to *C. yacare,* no Federal activities, other than the issuance of CITES export permits, are known that would require conferral or consultation. According to the CITES treaty, Appendix-II species need only a CITES export permit issued by the exporting country for their importation into another country. However, because of its listing as endangered under the Act, the importation and exportation of specimens from *C. yacare* presently require an Endangered Species Act permit issued by the Office of Management Authority. Consequently, a consultation with our Office of Scientific Authority is currently required before our Office of Management Authority can issue any import or export permit for *C. yacare.*

The listing of *C. c. fuscus* and *C. c. crocodilus* as threatened by similarity of appearance does not add any new requirements to those already in place for the importation or re-exportation of skins, other parts, and products of these two subspecies into/from the United States. This rule just requires that shipments involving skins and other parts of *C. c. fuscus* and *C. c. crocodilus* be tagged in accordance with the CITES Universal Tagging System Resolution and accompanied by valid CITES export documents, as is currently required. No U.S. import permits will be required for these specimens. However, this special rule does not cover the importation of viable caiman eggs or live caimans into the United States. In addition to a valid CITES export permit (already required), importation of viable eggs or live specimens of *C. c. fuscus* and *C. c. crocodilus* will require an Endangered Species Act import permit.

Section 8(a) of the Act authorizes the provision of limited financial assistance for the development and management of programs that the Secretary of the Interior determines to be necessary or useful for the conservation of endangered species in foreign countries. Sections 8(b) and 8(c) of the Act authorize the Secretary to encourage conservation programs for foreign endangered species, and to provide assistance for such programs, in the form of personnel and the training of personnel.

Sections 4(d) and 9 of the Act, and implementing regulations found at 50 CFR part 17.31, (which incorporate certain provisions of 50 CFR part 17.21), set forth a series of prohibitions and exceptions that generally apply to all threatened wildlife. These prohibitions, in part, make it illegal for any person subject to the jurisdiction of the United States to take (within U.S. territory or on the high seas), import or export, ship in interstate commerce in the course of a commercial activity, or sell or offer for sale in interstate or foreign commerce any listed species. It also is illegal to possess, sell, deliver, carry, transport, or ship any such wildlife that has been taken illegally. Certain exceptions apply to employees or agents of the Service, other Federal land management agencies, the National Marine Fisheries Service, and State conservation agencies (50 CFR part 17.21(c)(3) and part 17.31(b)).

Permits may be issued to carry out otherwise prohibited activities involving threatened wildlife species under certain circumstances. Regulations governing permits are

codified at 50 CFR part 17.32. With regard to threatened wildlife, a permit may be issued for the following purposes: Scientific research, enhancement of propagation or survival, zoological exhibition or education, incidental taking, or special purposes consistent with the Act. All such permits must also be consistent with the purposes and policy of the Act as required by section 10(d). Such a permit will be governed by the provisions of § 17.32 unless a special rule applicable to the wildlife (appearing in § 17.40 to § 17.48) provides otherwise.

Threatened species are generally covered by all prohibitions applicable to endangered species, under section 4(d) of the Act. The Secretary, however, may propose special rules if deemed necessary and advisable to provide for the conservation of the species. The special rule described here for § 17.42 allows commercial importation and re-exportation into/from the United States of certain farm-reared, ranch-reared, and wild-collected specimens of threatened caiman species, which are listed in CITES Appendix II. Importation could be restricted from a particular country of origin or re-export if that country is not complying with the CITES Universal Tagging System Resolution, or if that country has been identified as a subject to a recommended suspension of trade by the CITES Standing Committee or at a CITES Conference of the Parties. Interstate commerce within the United States and re-export of *C. yacare, C. c. crocodilus,* and *C. c. fuscus* parts will not require additional U.S. threatened species permits.

Effects of This Rule

This rule revises § 17.11(h) to reclassify the *C. yacare* from endangered to threatened to reflect more accurately the present status of this species. The Apaporis River caiman (*C. c. apaporiensis*), the black caiman (*M. niger*), and the broad-snouted caiman (*C. latirostris*) retain their endangered status under the Act. *Crocodylus crocodylus crocodilus* and *C. c. fuscus* (including *C. c. chiapasius*) are listed as threatened by reason of similarity in appearance. /-

Description of the Special Rule

Currently, listing of *C. yacare* in Appendix II of CITES allows commercial trade in the species. This special rule allows commercial importation and re-exportation into/from the United States of *C. yacare* skins, other parts, and products originating from countries effectively implementing the crocodilian CITES Universal Tagging System Resolution, and only from countries that have not been identified by the CITES Parties for inadequate implementation of CITES. The intent of this special rule is to enhance the conservation of the yacare caiman and the other endangered and threatened caiman populations by supporting those countries properly managing their caiman populations through the opening of commercial markets in the United States.

The degree of endangerment of crocodilian species varies by species and specific populations. Some caiman species are listed on Appendix I of CITES. Such listing prohibits international trade in the species if such activity is conducted for primarily commercial purposes and/or determined to be detrimental to the survival of the species. The remaining species and populations of caiman are included in Appendix II, thereby allowing commercial trade if certain scientific and management findings are made. Some caiman species are also listed as endangered in the U.S. List of Endangered and Threatened Wildlife, while other species are not included. In addition to the United States, several countries have taken domestic actions to protect wild caiman populations, but allow trade in specimens bred or raised in captivity under appropriate management programs.

We agree that yacare caiman populations in some range countries are being sufficiently managed through ranching or captive breeding programs to support controlled commercial use. However, the Service is concerned about: (1) The illegal harvest and inadequate trade controls for caiman species in Appendix II of CITES; (2) the commingling and misidentification of legal and illegal skins in intermediary trading, processing, and manufacturing countries; and (3) the sustainable management of the yacare caiman in those countries allowing a legal harvest of wild specimens.

The CITES Parties adopted at the 1994 Fort Lauderdale meeting (COP9) and are currently implementing proisions of the Universal Tagging System Resolution for crocodilian skins (Resolution Conf. 9.22). The Service supports these efforts, including the most recent clarifications of the resolution resulting from the Animals Committee meeting held in September 1996. At the CITES meeting of the Conference of the Parties in Zimbabwe in 1997, the CITES Secretariat reported that, to its knowledge, all range countries were effectively implementing the Universal Tagging System Resolution. Adherence to the CITES tagging requirements has reduced the potential for substitution of illegal skins and reduced the trade control problems with the similarity of appearance of skins and products among different species of crocodilians.

In addition to the measures established by CITES in the Universal Tagging System Resolution, this special rule contains other steps designed to restrict or prohibit trade from countries that are not effectively implementing the CITES Universal Tagging System Resolution and, thus, to ensure that the United States does not become a market for illegal trade in crocodilian species and to encourage other nations to control illegal trade.

Effects of the Special Rule

Consistent with the requirements of sections 3(3) and 4(d) of the Act, this rule also contains a special rule that amends 50 CFR 17.42 to allow commercial importation and re-exportation, under certain conditions, of whole and partial skins, other parts, and finished products from yacare caiman without a threatened species import permit otherwise required by 50 CFR part 17, if all requirements of the special rule and 50 CFR parts 13 (General Permits Procedures), 14 (Importation, Exportation, and Transportation of Wildlife), and 23 (Endangered Species Convention—CITES) are met.

The reclassification of *C. yacare* to ''threatened'' and the accompanying special rule allowing commercial trade into the United States without endangered species import permits does not end protection for this species, which remains on Appendix II of CITES. To the contrary, the special rule complements the CITES Universal Tagging System Resolution for crocodilian skins by allowing imports and re-exports only from those range countries properly managing this species and controlling exports, and only from those intermediary countries properly implementing the CITES Universal Tagging System Resolution. Thus, this special rule simply reconciles ESA requirements for the importation and exportation of *C. yacare* shipments into and from the United States with CITES ones.

The listing of *C. c.* fuscus and *C. c. crocodilus* as threatened by similarity of appearance, and the accompanying special rule allowing commercial trade into the United States, also will have no effect on the issuance of permits for the commercial importation and exportation of skins, other parts, and products of these two caiman subspecies into and from the United States. Since *C. c. fuscus* and *C. c. crocodilus* are currently listed in Appendix II of CITES, a CITES permit issued by the exporting or re-

exporting country is already required for importation of shipments of these two subspecies into another country. This rule requires only that shipments involving skins and other parts of *C. c. fuscus* and *C. c. crocodilus* be tagged in accordance with the CITES Universal Tagging System Resolution and accompanied by valid CITES export documents, as is currently done. No U.S. import permits are required for these specimens. However, in the case of viable eggs or live specimens of *C. c. fuscus* and *C. c. crocodilus* into the United States, an Endangered Species Act import permit will be required in addition to the already required CITES export permit.

In summary, this special rule prohibits the importation and re-exportation of specimens (skins, other parts, or products) of *C. caiman, C. c. crocodilus,* and *C. c. fuscus* originating from any country (range country or a country of manufacture or re-export) that: (1) Is not effectively implementing the CITES Universal Tagging System Resolution including (but not limited to) the use of properly marked tamper-proof tags on all skins, the package of other crocodile parts in transparent sealed containers clearly marked with parts tags, the recording of the same information on the tags on the CITES documents, and maintenance of records accounting for transactions of skins, parts, and products; or (2) has failed to designate a Management Authority or Scientific Authority; or (3) have been identified by the Conference of the Parties to the Convention, the Convention's Standing Committee, or in a Notification from the Secretariat as a country from which Parties should not accept permits.

In a limited number of situations where the original tags from the country of export have been lost in processing the skins, we will allow whole skins, flanks, and chalecos into the United States if CITES-approved re-export tags have been attached in the same manner as the original tags and proper re-export certificates accompany the shipment. If a shipment contains more than 25 percent replacement tags, the re-exporting country must consult with the U.S. Office of Management Authority prior to clearance of the shipment, and such shipments may be seized, if the Service cannot determine that the requirements of the CITES Universal Tagging System Resolution have been observed.

In the case where tagged caiman skins are exported to another country for manufacturing purposes, and the finished products are re-exported to the United States, then neither the country of origin nor the country of re-export can be subject to a Notice of Information based on the criteria described in the special rule if imports are to be allowed. The Service will initially presume that intermediary countries are effectively implementing the CITES Universal Tagging System Resolution, but the special rule has provisions to impose bans if persuasive evidence to the contrary is presented.

Our Office of Management Authority will provide on request the list of those countries subject to a Schedule III Notice of Information to manufacturers in the country of re-export and to importers so that they may be advised of restrictions on caiman skins, products, and parts that can be utilized in products intended for U.S. commerce. The Management Authority of the country of manufacture should ensure that re-export certificates provided for manufactured goods intended for the United States are not for products and re-exports derived from countries subject to a Schedule III Notice of Information. In compliance with these rules, commerce in finished products from a re-export country would be allowed only with the required CITES documentation and without an endangered or threatened species permit for individual shipments otherwise required under 50 CFR part 17.

Finally, this special rule does not cover the importation of viable caiman eggs or live caimans into the United States. Importation of these two types of specimens will require an Endangered Species Act import permit and the appropriate CITES permit. This requirement will allow scrutiny of individual applications for importation of live caimans or eggs so as to prevent accidental introduction of these exotic species into the United States, which may have detrimental effects on U.S. native wildlife or ecosystems. Re-exportation from the United States of caiman skins, other parts, and products will continue to require CITES documents. Interstate commerce within the United States in legally imported caiman skins, other parts, and products will not require U.S. threatened species permits.

This special rule allows trade through intermediary countries. Countries are not considered as intermediary countries or countries of re-export if the specimens remain in Customs control while transiting or being transshipped through the country and provided those specimens have not entered into the commerce of that country. However, the CITES Universal Tagging System Resolution presupposes that countries of re-export have implemented a system for monitoring skins.

We wrote this special rule to allow the Service to respond quickly to changing situations that may result in lessened protection to crocodilians. The criteria described in the special rule establish specific, non-discretionary bases for determining whether CITES provisions are being effectively implemented. Therefore, by the publication of such notice in the **Federal Register**, we can deny approval of permits, and imports into the United States can be prohibited from any country that fails to comply with the requirements of the special rule.

In a separate rule-making proposal, amending 50 CFR part 23, the Service will propose implementation of the CITES Universal Tagging System Resolution for all crocodilians. That rulemaking will adopt CITES tags as the required tag for all crocodilian skins, including caiman chalecos and flanks, being imported into or exported from any country if the skin is eventually imported into the United States. For the reasons noted above, the Service finds that the special rule for caiman species, including the yacare caiman, includes all of the protection that is necessary and advisable to provide for the conservation of such species.

The Monitoring of Yacare Caiman

Requirements of the Act for the monitoring of species also apply to foreign species (see final rule ''Endangered and Threatened Wildlife and Plants; Removal of Three Kangaroos From the List of Endangered and Threatened Wildlife'' published in the **Federal Register** on March 9, 1995; 60 FR 12887). Monitoring programs are conducted to ensure that species continue to fare well after delisting or downlisting occurs. These monitoring programs frequently include population and species distribution surveys, assessment of the condition of important habitats for the species, and assessment of threats identified as relevant to the species.

The Service depends primarily on range countries to monitor *C. yacare.* To monitor the status of *C. yacare,* we will request the governments of the range countries (Argentina, Brazil, Paraguay, and Bolivia) wishing to export specimens of *C. yacare* to the United States for commercial purposes to provide us every two years, for the following 10 years, with the most recent information available on the status of the species, gathered by the respective range countries to fulfill their CITES scientific and management requirements. The first submission of

status information is due on December 31, 2001. All information provided by the range countries will be available for public review.

For each country, the following information should be provided on the status of *C. yacare:*

(1) Recent distribution and population data, and a description of the methodology used to obtain such estimates;

(2) Description of research projects currently being conducted related to the biology of the above species in the wild, particularly their reproductive biology (for example, age or size when animals become sexually mature, number of clutches per season, number of eggs per clutch, survival of eggs, survival of hatchlings);

(3) Description of laws and programs regulating harvest of the above species, including approximate acreage of land set aside as natural reserves or national parks that provide protected habitat for the above species;

(4) Description of current sustainable harvest programs for the above species, including ranching (*i.e.,* captive-rearing of crocodiles collected from the wild as eggs or juveniles) and farming (captive-breeding of animals) programs;

(5) Current harvest quotas for wild populations; and

(6) Export data for the last 10 years (preferably organized according to origin of animals: wild-caught, captive-reared, and captive-bred).

Regulatory Planning and Review

This rule is not subject to review by the Office of Management and Budget under Executive Order 12866.

Regulatory Flexibility Act

The Department of the Interior certifies that the special rule in § 17.42(g) will not have a significant economic effect on a substantial number of small entities, as defined under the Regulatory Flexibility Act (5 U.S.C. 601 *et seq.*) Most or all of the potential applicants who might take advantage of the procedures implemented through this special rule are individuals or small entities.

Unfunded Mandates Reform Act

The special rule in § 17.42(g) does not impose an unfunded mandate on State, local, or tribal governments or the private sector of more than $100 million a year.

Takings

In accordance with Executive Order 12630, the special rule in § 17.42(g) does not have significant takings implications.

Federalism

In accordance with Executive Order 13132, the special rule in § 17.42(g) does not have significant Federalism effects to warrant the preparation of a Federalism assessment.

Civil Justice Reform

In accordance with Executive Order 12988, the Office of the Solicitor has determined that this special rule in § 17.42(g) does not unduly burden the judicial system and meets the requirements of sections 3(a) and 3(b)(2) of the Order.

Paperwork Reduction Act

The special rule in § 17.42(g) does require an information collection from 10 or more parties and, therefore, a submission under the Paperwork Reduction Act is required. The Office of Management and Budget approved the information collection requirements contained in this special rule under the Paperwork Reduction Act and assigned clearance number 1018–0093 as part of the permit requirements contained in Part 23 of Title 50.

National Environmental Policy Act

The Service has determined that Environmental Assessments and Environmental Impact Statements, as defined under the authority of the National Environmental Policy Act of 1969, need not be prepared in connection with regulations adopted pursuant to section 4(a) of the Act of 1973, as amended. A notice outlining the Service's reasons for this determination was published in the **Federal Register** on October 25, 1983 (48 FR 49244).

References Cited

Amato, G. D. 1992. Expert Report. Yale University, New Haven, CT. 6 pp. Unpublished report.

Brazaitis, P. 1989a. The caiman of the Pantanal: Past, present, and future, pp. 119–124, *in* Crocodiles. Proceedings of the 8th Working Meeting of the Crocodile Specialist Group. IUCN, Gland, Switzerland. 204 pp.

Brazaitis, P. 1989b. The forensic identification of crocodilian hides and products, pp. 17–43, *in* Crocodiles: Their ecology, management and conservation. IUCN, Gland, Switzerland.

Brazaitis, P., C. Yamashita, and G. Rebelo. 1988. CITES central South American caiman study: Phase I-central and southern Brazil. 62 pp.

Brazaitis, P., C. Yamashita, and G. Rebelo. 1990. A summary report of the CITES central South American caiman study: Phase I: Brazil, pp. 100–115, *in* Crocodiles. Proceedings of the 9th Working Meeting of the Crocodile Specialist Group. Vol. I. IUCN, Gland, Switzerland. 300 pp.

Brazaitis, P., G. Amato, G. Rebelo, C. Yamashita, and J. Gatesy. 1993. Report to CITES on the biochemical systematics study of Yacare caiman, *Caiman yacare*, of central South America. Unpublished report. 43 pp.

Brazaitis, P., R. Madden, G. Amato, and M. Watanabe. 1997a. The South American and Central American caiman (*Caiman*) complex. Systematics of the *Caiman*: Results of morphological, statistical, molecular genetics, and species discrimination studies. Special report to the U.S. Fish and Wildlife Service. 62 pp. Unpublished.

Brazaitis, P., R. Madden, G. Amato, and M. Watanabe. 1997b. Morphological characteristics, statistics, and DNA evidence used to identify closely related crocodilian species for wildlife law enforcement. Proceedings of the American Academy of Forensic Sciences. Annual Meeting, New York City, February 17–22, 1997. D28: 92–93. Published abstract.

Brazaitis, P., G. H. Rebelo, C. Yamashita, E. A. Odierna, and M. E. Watanabe. 1996. Threats to Brazilian crocodilian populations. Oryx, 30:275–284.

Busack, S. D., and S. S. Pandya. 1996. Presented at 76th annual meeting of the American Society of Ichthyologists and Herpetologists. New Orleans, LA. Abstract.

Coutinho, M., and Z. Campos. 1996. Effect of habitat and seasonality on the densities of caiman in southern Pantanal, Brazil. Journal of Tropical Ecology, 12:741–747.

Da Silveria, R., and J. B. Thorbjarnarson. 1999. Conservation implications of commercial hunting of black and spectacled caiman in the Mamiraua Sustainable Development Reserve, Brazil.

Fitch, H., and M. Nadeau. 1979. An assessment of *Caiman latirostris* and *Caiman crocodilus yacare* in northern Argentina. Unpublished progress report to World Wildlife Fund—U.S., U.S. Fish and Wildlife Service, and New York Zoological Society. 7 pp.

Groombridge, B. 1982. The IUCN Amphibia-Reptilia red data book. Part I: Testudines, Crocodylia, Rhynchocephalia. IUCN, Gland, Switzerland. 426 pp.

King, F. W., and Burke, R. L. 1989. Crocodilian, tuatara, and turtle species of the world: A taxonomic and geographic reference. Association of Systematic Collections, Washington, D.C.

King, F. W., and D. H. Vıdez-Roca. 1989. The caimans of Bolivia: A preliminary report on a CITES and Centro Desarrollo Forestal sponsored survey of species distribution and status, pp. 128–155, *in* Crocodiles. Proceedings of the 8th Working Meeting of the Crocodile Specialist Group. IUCN, Gland, Switzerland. 204 pp.

King, F. W., A. L. Aquino, N. J. Scott, Jr., and R. Palacios. 1994. Status of the crocodiles of Paraguay: Results of the 1993 monitoring surveys. Report from Biodiversity Services, Inc., to Paraguay's Ministerio de Agricultura y Ganaderia and the Secretariat of the Convention on International Trade in Endangered Species of Wild Fauna and Flora (CITES). 39 pp.

Mourao, G., Z. Campos, and M. Coutinho. 1996. Size structure of illegally harvested

and surviving caiman Caiman crocodilus yacare in Pantanal, Brazil. Biological Conservation, 75:261–265.

Scott, N. J., A. L. Aquino, and L. A. Fitzgerald. 1988. Distribution, habitats, and conservation of the caiman (Alligatoridae) of Paraguay. Unpublished report to the CITES Secretariat, Lausanne, Switzerland. 30 pp.

Scott, N. J., A. L. Aquino, and L. A. Fitzgerald. 1990. Distribution, habitats and conservation of the caimans (Alligatoridae) of Paraguay. Vida Silvestre Neotropical, 43–51.

Thorbjarnarson, J. B. 1992. Crocodiles: An action plan for their conservation. IUCN, Gland, Switzerland. 136 pp.

Thorbjarnarson, J. B. 1994. Reproductive ecology of the spectacled caiman (Caiman crocodilus) in the Venezuelan Llanos. Copeia, 1994:907–919.

Authors

The primary author of this rule is Dr. Javier Alvarez, Office of Scientific Authority, U.S. Fish and Wildlife Service, Washington, DC 20240 (703–358–1708 or FTS 921–1708).

List of Subjects in 50 CFR Part 17

Endangered and threatened species, Exports, Imports, Reporting and recordkeeping requirements, Transportation.

Regulations Promulgation

Accordingly, the Service hereby amends part 17, subchapter B of chapter I, title 50 of the Code of Federal Regulations, as set forth below:

PART 17— [AMENDED]

1. The authority citation for part 17 continues to read as follows:

Authority: 16 U.S.C. 1361–1407; 16 U.S.C. 1531–1544; 16 U.S.C. 4201–4245; Pub. L. 99–625, 100 Stat. 3500; unless otherwise noted.

2. Amend § 17.11(h) by revising the current entry for the yacare caiman and by adding entries for the brown and the common caimans in alphabetic order under ''Reptiles'' on the List of Endangered and Threatened Wildlife to read as follows:

§ 17.11 Endangered and threatened wildlife.

* * * * *

(h) * * *

Species		Historic range	Vertebrate population where endangered or threatened	Status	When listed	Critical habitat	Special rules
Common name	Scientific name						
* * *	*	*	*	*	*	*	
REPTILES							
* * *	*	*	*	*	*	*	
Caiman, brown	Caiman crocodilus fuscus (includes Caiman crocodilus chiapasius).	Mexico, Central America, Colombia, Ecuador, Venezula, Peru.	Entire	T(S/A)	695	NA	17.42(g)
Caiman, common	Caiman crocodilus crocodilus	Brazil, Colombia, Ecuador French Guiana, Guyana, Surinam, Venezuela, Bolivia, Peru.	Entire	T(S/A)	695	NA	17.42(g)
Caiman, yacare	Caiman yacare	Argentina, Bolivia, Brazil, Paraguay.	Entire	T	3,695	N/A	17.42(g)
* * *	*	*	*	*	*	*	

3. Section 17.42 is amended by adding a new paragraph (g) as follows:

§ 17.42 Special rules—reptiles.

* * * * *

(g) *Threatened caiman.* This paragraph applies to the following species: Yacare caiman (*Caiman yacare*), the common caiman (*Caiman crocodilus crocodilus*), and the brown caiman (*Caiman crocodilus fuscus* including *Caiman crocodilus chiapasius*). These taxa will be collectively referred to as ''caiman.''

(1) *What are the definitions of terms used in this paragraph (g)?* (i) *Caiman skins* means whole or partial skins, flanks, chalecos, and bellies (whether these are salted, crusted, tanned, partially tanned, or otherwise processed).

(ii) *Caiman parts* means body parts with or without skin attached (including tails, throats, feet, and other parts, but excluding meat and skulls) and small cut skins pieces.

(iii) *Caiman product* means any processed or manufactured product items (including curios and souvenirs) that are ready for retail sale, and composed, totally or in part, of yacare caiman, brown caiman, or common caiman.

(iv) *Country of re-export* means those intermediary countries that import and re-export caiman skins, parts, and/or products. However, we will not consider intermediary countries those through which caiman skins, parts, and/or products are shipped while remaining under Customs control.

(v) *Universal Tagging System Resolution* means the CITES (Convention on International Trade in Endangered Species of Wild Fauna and Flora) resolution entitled ''Universal Tagging System for the Identification of Crocodilian Skins'' and numbered Conf. 9.22, and any subsequent revisions.

(2) *What activities involving yacare caiman (Caiman yacare), the common caiman (Caiman crocodilus crocodilus), and the brown caiman (Caiman crocodilus fuscus) are prohibited by this rule?* (i) *Import, export, and re-export.* Except for the activities described in paragraph (g)(3) of this section, it is unlawful to import, export, re-export, or present for export or re-export without valid permits (as required under 50 CFR parts 17 and 23) any caiman or their skins, other parts or products.

(ii) *Commercial activity.* Except as described in paragraph (g)(3) of this section, it is unlawful to sell or offer for sale, deliver, receive, carry, transport, or ship in interstate or foreign commerce any caiman or their skins, other parts, or products.

(iii) It is unlawful for any person subject to the jurisdiction of the United States to commit, attempt to commit, solicit to commit, or cause to be committed any acts described in paragraphs (g)(2) (i) and (ii) of this section.

(3) *What activities involving yacare caiman (Caiman yacare), the common caiman (Caiman crocodilus crocodilus), and the brown caiman (Caiman crocodilus fuscus) are allowed by this rule?* The import/export/re-export of, or the interstate/foreign commerce in caiman skins, other parts, or products may be allowed without a threatened species permit (issued according to 50 CFR 17.32) only when the provisions in 50 CFR parts 13, 14, and 23, and the requirements of the applicable paragraphs below have been met.

(i) *Import, export, or re-export.* The import, export, or re-export into/from the United States of caiman skins, parts, or products may be allowed provided the following conditions are met:

(A) Each caiman skin imported into or exported or re-exported from the United States after the effective date of the final rule must bear *either:*

(*1*) An intact, uncut tag from the country of origin meeting all the requirements of the CITES Universal Tagging System Resolution, *or*

(*2*) An intact, uncut replacement tag from the country of re-export where the original tags were lost or removed from raw, tanned, and/or processed skins. These replacement tags must meet all the requirements of the CITES Universal Tagging System Resolution, except showing the country of re-export instead of the country of origin, provided those re-exporting countries have implemented an administrative system for the effective matching of imports and re-exports consistent with the CITES Universal Tagging System Resolution. If a shipment contains more than 25 percent replacement tags, the Management Authority of the re-exporting country must consult with the U.S. Office of Management Authority before clearance of the shipment. Such shipments may be seized if we determine that the requirements of the CITES Universal Tagging System Resolution have not been met.

(B) In accordance with the CITES Universal Tagging System Resolution, all caiman parts must be placed in a transparent, sealed container. Each container imported, exported, or re-exported into/from the United States after the effective date of the rule:

(*1*) Must have a parts tag attached in such a way that opening of the container will prevent later reuse of such tag; and

(*2*) The parts tag must contain a description of the contents plus total weight of the container and its contents.

(C) The information on the export permit or re-export certificate must be the same as that on the skin and part tags, carry the same permit or certificate number, and be validated by the government authority designated as the CITES document-issuing authority.

(D) The CITES permit or certificate accompanying shipments of caiman skins, parts, or products must contain the following information:

(*1*) The country of origin, its export permit number, and date of issuance;

(*2*) If re-export, the country of re-export, its certificate number, and date of issuance; and

(*3*) If applicable, the country of previous re-export, its certificate number, and date of issuance.

(E) The country of origin and any intermediary country(s) must be effectively implementing the CITES Universal Tagging System Resolution. If we receive persuasive information from the CITES Secretariat or other reliable sources that a specific country is not effectively implementing the CITES Universal Tagging System Resolution, we will prohibit or restrict imports from such country(s) as appropriate for the conservation of the species.

(F) At the time of import, for each shipment covered by this exception, the country of origin and each country of re-export involved in the trade of a particular shipment must not be subject to a Schedule III Notice of Information (see paragraph (g)(4) of this section) prohibiting or restricting imports of all wildlife or any members of the Order Crocodylia. A listing of all countries subject to such a Schedule III Notice of Information is available by writing to: Office of Management Authority, U.S. Fish and Wildlife Service, Mail Stop ARLSQ–700, Washington, DC 20240, or via e-mail at r9oma@fws.gov.

(ii) *Shipment of skulls, processed meat, and scientific specimens.* The import, export, and re-export into/from the United States of skulls, processed meat, and scientific specimens of caiman is allowed without permits otherwise required by 50 CFR part 17, provided the requirements of part 23 are met.

(iii) *Noncommercial accompanying baggage.* The conditions described in paragraphs (g)(3)(i) and (ii) for skins, skulls, meat, other parts, and products made of specimens of caiman do not apply to non-commercial personal effects in accompanying baggage or household effects.

(iv) *Eggs and live specimens.* This special rule does not apply to live specimens or eggs of caiman. Import of such specimens requires an import permit as described in 50 CFR 17.32.

(4) *When and how will we inform you of additional restrictions in trade of yacare caiman (Caiman yacare), the common caiman (Caiman crocodilus crocodilus), and the brown caiman (Caiman crocodilus fuscus)?* Except in rare cases involving extenuating circumstances that do not adversely affect the conservation of the species, the Service will issue a Notice of Information announcing additional CITES restrictions in trade in specimens of caiman dealt with in this paragraph (g) if any of the following criteria are met:

(i) The country is listed in a Notification to the Parties by the CITES Secretariat as not having designated Management and Scientific Authorities that issue CITES documents or their equivalent.

(ii) The country is identified in any action adopted by the Conference of the Parties to the Convention, the Convention's Standing Committee, or in a Notification issued by the CITES Secretariat, whereby Parties are asked not to accept shipments of specimens of any CITES-listed species from the country in question or of any crocodilian species listed in the CITES appendices.

(iii) We determine, based on information from the CITES Secretariat or other reliable sources, that the country is not effectively implementing the CITES Universal Tagging System Resolution.

(5) *What are the approved information collection requirements in this rule?* The Office of Management and Budget approved the information collection requirements contained in this special rule under the Paperwork Reduction Act and assigned clearance number 1018–0093 as part of the permit requirements contained in Part 23 of Title 50. We may not conduct or sponsor, and you are not required to respond to, a collection of information unless it displays a currently valid OMB control number. The collection of information under this rule is done to provide information necessary to evaluate permit applications. We will use this information to review permit applications and make decisions, according to criteria established in various Federal wildlife conservation statutes and regulations, on the

issuance, suspension, revocation, or denial of permits. You must respond to obtain or retain a permit. We estimate the public reporting burden for these reporting requirements to vary from 20 minutes to 2 hours per response, with an average of 1 hour per response, including time for reviewing instructions, gathering and maintaining data, and completing and reviewing the forms.

Dated: April 7, 2000.

Stephen C. Saunders,

Acting Assistant Secretary for Fish and Wildlife and Parks.

[FR Doc. 00–11055 Filed 5–3–00; 8:45 am]

BILLING CODE 4310–55–P

DEPARTMENT OF COMMERCE

National Oceanic and Atmospheric Administration

50 CFR Parts 600 and 660

[Docket No. 991223347–9347; I.D. 042600B]

Fisheries Off West Coast States and in the Western Pacific; Pacific Coast Groundfish Fishery; Trip Limit Adjustments

AGENCY: National Marine Fisheries Service (NMFS), National Oceanic and Atmospheric Administration (NOAA), Commerce.

ACTION: Fishing restrictions; request for comments.

SUMMARY: NMFS announces changes to trip limits in the Pacific Coast groundfish fishery. These actions, which are authorized by the Pacific Coast groundfish fishery management plan (FMP), are intended to help the fisheries achieve optimum yield (OY).

DATES: Effective 0001 hours local time May 1, 2000 (May 16, 2000 for the ''B'' platoon), unless modified, superseded or rescinded, until the effective date of the 2001 annual specifications and management measures for the Pacific Coast groundfish fishery, which will be published in the **Federal Register**. Comments on this rule will be accepted through May 19, 2000.

ADDRESSES: Submit comments to William Stelle, Jr., Administrator, Northwest Region (Regional Administrator), NMFS, 7600 Sand Point Way N.E., BIN C15700, Bldg. 1, Seattle, WA 98115–0070; or Rodney McInnis, Acting Administrator, Southwest Region, NMFS, 501 West Ocean Blvd., Suite 4200, Long Beach, CA 90802–4213.

FOR FURTHER INFORMATION CONTACT: Katherine King or Yvonne deReynier, Northwest Region, NMFS, 206–526–6140.

SUPPLEMENTARY INFORMATION: The following changes to current management measures were recommended by the Pacific Fishery Management Council (Council), in consultation with the States of Washington, Oregon, and California, at its April 3–7, 2000, meeting in Portland, OR. Pacific coast groundfish landings will be monitored throughout the year, and further adjustments to the trip limits will be made as necessary to stay within the OYs and allocations announced in the annual specifications and management measures for the groundfish fishery, published in the **Federal Register** at 65 FR 221 (January 4, 2000), as amended at 65 FR 17805 (April 5, 2000).

Housekeeping

The Council made a number of housekeeping recommendations that would remedy minor problems in the management measures that were implemented at the beginning of the year. (1) The trip limits for Pacific ocean perch (POP) were inadvertently applied coastwide even though POP south of 40°10′ N. lat. were already included in the trip limits for minor slope rockfish. This document clarifies that the trip limits for POP (line 5 in Tables 3, 4, and 5) apply only north of 40°10′ N. lat., South of 40°10′ N. lat., POP remains in the minor slope rockfish category. (2) Flag rockfish are not found north of 40°10′ N. lat., and in Table 2 are removed from the minor shelf rockfish category in that area. (3) New testimony from fishers revealed that red-banded rockfish are not caught on the continental shelf, but are taken in deeper waters. Consequently, red-banded rockfish, which is one of the minor rockfish species that occurs both north and south of 40°10′ N. lat., is moved from the shelf to the slope category in Table 2. These reassignments result in no change to the OYs or trip limits for any species or species group. Other provisions remain the same except as explained below.

Flatfish

The Council heard testimony that limited entry trawl fishers were encountering small amounts of flatfish, particularly English sole, when fishing with large footropes in deeper water on the continental slope. Current restrictions would have required the use of small footrope gear for landings of any flatfish except Dover and rex soles between May 1–October 31, 2000. (This provision also applies to petrale sole from March 1–April 30, 2000.) The Council recommended an incidental trip limit for other flatfish of 400 lb (181 kg) per trip for large footrope trawls between May and October so that unavoidable incidental catch would not have to be discarded. This amount is believed to be too small to encourage any target fishing for flatfish on the shelf with large footrope gear, which is discouraged due to the potential interception of depleted species. Dover and rex soles remain in the only flatfish species in the FMP that are not managed according to the size of the trawl footrope onboard; there continues to be no poundage limit on arrowtooth flounder, petrale sole, and other flatfish taken with small footrope trawls.

Nearshore Minor Rockfish

A new strategy for managing rockfish was implemented on January 1, 2000, which reduced the amount of rockfish available to nearshore commercial fisheries (65 FR 221, January 4, 2000, as amended). When the current limits were recommended by the Council in November 1999, there was a clear need to reduce landings significantly, but there was no way to anticipate reductions in participation. The best available information at the April Council meeting indicated that landings of rockfish through February 2000 were minimal. Although the commercial nontrawl fisheries are subject to a high degree of seasonality, it appears unlikely that the current limits would allow achievement of the nearshore rockfish limited entry and open access allocations. The Council recommended that cautious increases to the nearshore rockfish limits begin May 1, with further adjustments to be made later in the year as needed. Any increase runs some risk of accelerating the fisheries to the point where they would need to be closed before the end of the year, but the Council believed the risk to be preferable to continuing with limits that provide very little opportunity for profitable trips. Even with these increases, the trip limits for nearshore rockfish remain significantly lower than in recent years, and will not accommodate the needs of the entire open access fleet. The Council made the following recommendations:

For the limited entry nontrawl fishery north of 40°10′ N. lat., the nearshore minor rockfish trip limit is changed from 2,400 lb (1,089 kg) per 2 months, of which no more than 1,200 lb (544 kg) may be species other than black or blue rockfish, to 3,000 lb (1,361 kg) per 2 months, of which no more than 1,400 lb (635 kg) may be species other than black or blue rockfish.

For the limited entry nontrawl fishery south of 40°10′ N. lat., the nearshore minor rockfish trip limit is increased from 1,000 (454 kg) to 1,300 lb (590 kg) per 2-month period.

For the open access nontrawl fishery north of 40°10′ N. lat., the nearshore minor rockfish trip limit is increased from 1,000 lb (454 kg) per 2 months, of which no more than 500 lb (227 kg) per 2 months, of which no more than 700 lb (318 kg) may be species other than black or blue rockfish. In addition, special provisions were made for vessels landing in Pacific City, OR.

The Council heard testimony from two dory fishers from Pacific City, who stated that the limits were so low that vessels were not fishing and virtually no landings of groundfish had occurred so far this year. (Less than 200 lb (113 kg) of groundfish have been landed in Pacific City through March 30, 2000.) The dory representatives asked the Council to consider compressing their groundfish fishery into a 5-month season, from May 1 through September 30, 2000, after which no landings of groundfish would be allowed in Pacific City for the rest of the year. This could provide larger monthly cumulative limits when the season is open, at the expense of closing Pacific City to landings of groundfish for the rest of the year.

Pacific City is a small community, geographically isolated from the rest of the coast. The nearest ports with processing facilities are Garibaldi to the north and Newport to the south, both in Oregon. The higher limit and later closure would be linked to landing in Pacific City. There are no docks for offloading in Pacific City. Therefore, these limits are only available to small vessels that can land on the beach, and cannot be harvested by larger vessels that later can land in other areas. The Pacific City groundfish fleet consists entirely of open access dories, small vessels less than 25 feet (7.68 m) in length, that are launched from, and land on, the beach. These vessels are so small that they conduct only day trips near shore. This dory fleet consists of about 11 vessels of which half are active in the fishery. The groundfish taken by these vessels are almost entirely black and blue rockfish, predominantly black. Occasionally a dory fisher also participates in the salmon fishery. Alternative fisheries do not exist for the dory fleet in Pacific City.

The Council carefully considered the composition of the fleet, the inability of dories to participate in other fisheries, the geographical isolation and lack of port and processing facilities that would discourage other vessels from landing in Pacific City, and agreed to recommend a variation in the season and trip limit for this localized fleet. The Council recommended a cumulative trip limit of 2,200 lb (998 kg) per month from May 1 through September 30, after which no open access landings of groundfish may be made in Pacific City, even if taken in the salmon fishery. The amount of groundfish available during the year is intended to be no different than for open access fishers operating under a longer season and landing elsewhere along the coast. This action is consistent with the Council's intent ''* * * to provide a continued opportunity to nearshore fishers to selectively harvest black and blue rockfish * * *'' (65 FR 235, January 4, 2000).

For the open access nontrawl fishery south of 40°10′ N. lat., the nearshore minor rockfish trip limit is increased from 550 lb (249 kg) to 800 lb (363 kg) per 2-month period. Sablefish North of 35° N. lat.

Similarly, landing by the daily trip limit fisheries for sablefish taken with nontrawl gear north of 36° N. lat., were lower than expected through the end of February 2000, although close to 1999 levels. The Council recommended continuing the 300-lb (136-kg) daily trip limit, but increasing the cumulative amount that may be landed from 2,100 (953 kg) to 2,400 lb (1,089 kg) per 2-month period in both the limited entry and open access nontrawl sablefish fisheries.

At its June meeting in Portland, Oregon, the Council will make recommendations for the opening date, duration, and level of cumulative trip limits for the nontrawl, limited entry regular sablefish season.

NMFS Actions

For the reasons stated here, NMFS concurs with the Council's recommendations and announces the following changes to the 2000 annual management measures (65 FR 221, January 4, 2000, as amended at 65 FR 17805, April 5, 2000), as follows:

In Section IV., a new paragraph C.(4) is added and Tables 2, 3, 4, and 5 are revised to read as follows:

IV. NMFS Actions

* * * * *

TABLE 2.—MINOR ROCKFISH SPECIES (EXCLUDES THORNYHEADS)

North of 40° 10″ N. lat.	South of 40° 10″ N. lat.
Nearshore	
black, *Sebastes melanops*	black, *Sebastes melanops.*
black and yellow, *S. chrysolmelas*	black and yellow, *S. chrysolmelas.*
blue, *S. mystinus*	blue, *S. mystinus.*
brown, *S. auriculatus*	brown, *S. auriculatus.*
calico, *S. dalli*	calico, *S. dalli.*
China, *S. Nebulosus*	California scorpionfish, *Scorpaena guttata.*
copper, *S. caurinus*	China, *Sebastes nebulosus.*
gopher, *S. carnatus*	copper, *S. caurinus.*
grass, *S. rastrelliger*	gopher, *S. carnatus.*
kelp, *S. atrovirens*	grass, *S. rastrelliger.*
olive, *S. serranoides*	kelp, *S. atrovirens.*
quillback, *S. maliger*	olive, *S. serranoides.*
treefish, *S. serriceps*	quillback, *S. maliger.*
	treefish, *S. serriceps.*
Shelf	
bronzespotted, *S. gilli*	bronzespotted, *S. gilli.*
bocaccio, *S. paucispinis*	chameleon, *S. phillipsi.*
chameleon, *S. phillipsi*	dwarf-red, *S. rufinanus.*
chilipepper, *S. goddei*	flag, *S. rubrivinctus.*

TABLE 2.—MINOR ROCKFISH SPECIES (EXCLUDES THORNYHEADS)—Continued

North of 40° 10″ N. lat.	South of 40° 10″ N. lat.
cowcod, *S. levis*	freckled, *S. lentiginosus.*
dwarf-red, *S. rufinanus*	greenblotched, *S. rosenblatti.*
freckled, *S. lentiginosus*	greenspotted, *S. chlorostictus.*
greenblotched, *S. rosenblatti*	greenstriped, *S. elongatus.*
greenspotted, *S. chlorostictus*	halfbanded, *S. semicinctus.*
greenstriped, *S. elongatus*	honeycomb, *S. umbrosus.*
halfbanded, *S. semicinctus*	Mexican, *S. macdonaldi.*
honeycomb, *S. umbrosus*	pink, *S. eos.*
Mexican, *S. macdonaldi*	pinkrose, *S. simulator.*
pink, *S. eos*	pygmy, *S. wilsoni.*
pinkrose, *S. simulator*	redstriped, *S. proriger.*
pygmy, *S. wilsoni*	rosethorn, *S. helvomaculatus.*
redstriped, *S. proriger*	rosy, *S. rosaceus.*
rosethorn, *S. helvomaculatus*	silvergrey, *S. brevispinis.*
rosy, *S. rosaceus*	speckled, *S. ovalis.*
silvergrey, *S. brevispinis*	squarespot, *S. hopkinsi.*
speckled, *S. ovalis*	starry, *S. constellatus.*
squarespot, *S. hopkinsi*	stripetail, *S. saxicola.*
starry, *S. constellatus*	swordspine, *S. ensifer.*
stripetail, *S. saxicola*	tiger, *S. nigrocinctus.*
swordspine, *S. ensifer*	vermilion, *S. miniatus.*
tiger, *S. nigrocinctus*	yelloweye, *S. ruberrimus.*
vermilion, *S. miniatus*	yellowtail, *S. flavidus.*
yelloweye, *S. ruberrimus.*	
Slope	
aurora, *S. aurora*	aurora, *S. aurora.*
bank, *S. rufus*	bank, *S. rufus.*
blackgill, *S. melanostomus*	blackgill, *S. melanostomus.*
darkblotched, *S. crameri*	darkblotched, *S. crameri.*
redbanded, *S. babcocki*	Pacific ocean perch (POP), *S. alutus.*
rougheye, *S. aleutianus*	redbanded, *S. babcocki.*
sharpchin, *S. zacentrus*	rougheye, *S. aleutianus.*
shortraker, *S. borealis*	sharpchin, *S. zacentrus.*
splitnose, *S. diploproa*	shortraker, *S. borealis.*
yellowmouth, *S. reedi*	yellowmouth, *S. reedi.*

* * * * *

TABLE 3.—2000 TRIP LIMITS [1] AND GEAR REQUIREMENTS [2] FOR LIMITED ENTRY TRAWL GEAR

[Read Section IV.A. NMFS Actions before using this table.]

Species/groups	Jan–Feb	Mar–Apr	May–Jun	Jul–Aug	Sep–Oct	Nov–Dec
Minor slope rockfish:						
North	3,000 lb/2 months			5,000 lb/2 months		1,500 lb/month.
South	3,000 lb/2 months			5,000 lb/2 months		1,500 lb/month.
Splitnose-South	8,500 lb/2 months			14,000 lb/2 months		4,000 lb/month.
POP-North	500 lb/month			2,000 lb/month		500 lb/month.
Sablefish	7,000 lb/2 months; 22-inch size limit [3]		10,000 lb/2 months; 22-inch size limit [3]			3,000 lb/month; 22-inch size limit.[3]
Longspine thornyhead	2,000 lb/2 months			4,000 lb/2 months		6,000 lb/month.
Shortspine thornyhead	3,000 lb/2 months			1,000 lb/2 months		1,500 lb/month.
Dover Sole	55,000 lb/2 months			20,000 lb/2 months		20,000 lb/month.
Arrowtooth flounder	10,000 lb/ trip		Small footrope—No pound limit; Large footrope—Included in ''other flatfish'' trip limit [2]			10,000 lb/trip.
Petrale sole	No restriction	No limit but small footrope required	Small footrope—No pound limit; Large footrope—Included in ''other flatfish'' trip limit [2]			No restriction.
Rex sole	No limit					
Other flatfish [4]	Small footrope—No pound limit; Large footrope—400 lb per trip [2]					
Whiting shoreside [5]	20,000 lb/trip before primary season			Primary season		20,000 lb/trip after primary season.
Use of small footrope bottom trawl or midwater trawl required for landing all the following species: [6]						
Minor shelf rockfish:						
North	300 lb/month			1,000 lb/month		300 lb/month.

TABLE 3.—2000 TRIP LIMITS [1] AND GEAR REQUIREMENTS [2] FOR LIMITED ENTRY TRAWL GEAR—Continued

[Read Section IV.A. NMFS Actions before using this table.]

Species/groups	Jan–Feb	Mar–Apr	May–Jun	Jul–Aug	Sep–Oct	Nov–Dec
South	500 lb/month			1,000 lb/month		500 lb/month.
Canary rockfish	100 lb/month			300 lb/month		100 lb/month.
Widow rockfish:						
Mid-water trawl	30,000 lb/2 months			30,000 lb/2 months		30,000 lb/2 months.
Small footrope trawl	1,000 lb/month			1,000 lb/month		1,000 lb/month.
Yellowtail—North: [7]						
Mid-Water trawl	10,000 lb/2 months			30,000 lb/2 months		10,000 lb/2 months.
Small footrope trawl	1,500 lb/month			1,500 lb/month		1,500 lb/month.
Bocaccio—South [7]	300 lb/month			500 lb/month		300 lb/month.
Chilipepper—South: [7]						
Mid-water trawl	25,000 lb/2 months			25,000 lb/2 months		25,000 lb/2 months.
Small footrope trawl	7,500 lb/2 months			7,500 lb/2 months		7,500 lb/2 months.
Cowcod—South [7]	1 fish per landing			1 fish per landing		1 fish per landing.
Minor nearshore rockfish:						
North	200 lb/month			200 lb/month		200 lb/month.
South	200 lb/month			200 lb/month		200 lb/month.
Lingcod	CLOSED			400 lb/month; 24-inch size limit [8]		CLOSED.

[1] These trip limits apply coastwide unless otherwise specified. ''North'' means 40°10′ N. lat. to the US-Canada border. ''South'' means 40°10′ N. lat to the US–Mexico border. 40°10′ N. lat. is about 20 nautical miles south of Cape Mendocino CA.

[2] Gear requirements and prohibitions are explained at paragraph IV.A.(14).

[3] No more than 500 lbs (227 kg) per trip may be sablefish smaller than 22 inches (56 cm) total length, which counts toward the cumulative limit.

[4] Other flatfish means all flatfish listed at 50 CFR 660.302 except those in this Table 3 with a trip limit (excludes rex sole).

[5] The whiting ''per trip'' limit in the Eureka area inside 100 fm is 10,000 lb/trip throughout the year (See IV.B.(3)(c)).

[6] Small footrope trawl means a bottom trawl net with a footrope no larger than 8 inches (20 cm) in diameter. Midwater gear also may be used; the footrope must be bare. See paragraph IV.A.(14).

[7] Yellowtail rockfish and POP in the south and bocaccio, chilipepper, and cowcod rockfishes in the north are included in the trip limits for minor shelf rockfish in the appropriate area (Table 2).

[8] Lingcod must be greater than or equal to 24 inches (61 cm) total length. See IV.A.(6).

To convert pounds to kilograms, divide by 2.20462, the number of pounds in one kilogram.

TABLE 4.—2000 TRIP LIMITS [1] FOR LIMITED ENTRY FIXED GEAR

[Read Section IV. A. NMFS Actions before using this table.]

Species/groups	Jan–Feb	Mar–Apr	May–Jun	July–Aug	Sep–Oct	Nov–Dec
Minor slope rockfish:						
North	3,000 lb/2 months			5,000 lb/2 months		1,500 lb/month.
South	3,000 lb/2 months			5,000 lb/2 months		1,500 lb/month.
Splitnose—South	8,500 lb/2 months			14,000 lb/2 months		4,000 lb/month.
POP—North	500 lb/month			2,500 lb/month		500 lb/month.
Sablefish (daily trip limit fishery): [2]						
North of 36½ N. lat.	300 lb/day, 2,100 lb/2 months or 1 landing above 300 lb but less than 600 lb/week, less than 1,800 lb/2 months		300 lb/day, 2,400 lb/2 months (option to make one landing per week above 300 lb removed May 1; may be reinstated in July)			300 lb/day, 2,400 lb/2 months.
South of 36½ N. lat.	350 lb/day; or 1 landing above 350 lb per week, up to 1,050 lb		350 lb/day; or 1 landing above 350 lb per week, up to 1,050 lb			350 lb/day; or 1 landing above 350 lb per week, up to 1,050 lb.
Longspine thornyhead	12,000 lb/2 months			4,000 lb/2 months		6,000 lb/month.
Shortspine thornyhead	1,000 lb/month			1,000 lb/month		1,000 lb/month.
Dover sole	55,000 lb/2 months			20,000 lb/2 months		20,000 lb/month.
Arrowtooth flounder	10,000 lb/trip			No restriction		10,000 lb/trip.
Petrale sole	No restriction			No restriction		No restriction.
Rex sole	No restriction			No restriction		No restriction.
Other flatfish [3]	No restriction			No restriction		No restriction.
Shoreside whiting [4]	20,000 lb/trip			Open		20,000 lb/trip.
Minor shelf rockfish:						
North	300 lb/month			1,000 lb/month		300 lb/month.
South:						
40½10¼-36½00¼ N. lat.	500 lb/month	CLOSED [5]		1,000 lb/month		500 lb/month.

TABLE 4.—2000 TRIP LIMITS [1] FOR LIMITED ENTRY FIXED GEAR—Continued

[Read Section IV. A. NMFS Actions before using this table.]

Species/groups	Jan–Feb	Mar–Apr	May–Jun	July–Aug	Sep–Oct	Nov–Dec
South of 36½00¼ N. lat..	CLOSED	500 lb/month		1,000 lb/month		500 lb/month.
Canary—Coastwise:						
North	100 lb/month			300 lb/month		100 lb/month.
South:						
40½10¼-36½00¼ N. lat.	100 lb/month	CLOSED		300 lb/month		100 lb/month.
South of 36½00¼ N. lat.	CLOSED	100 lb/month		300 lb/month		100 lb/month.
Widow rockfish—Coastwide:						
North	3,000 lb/month			3,000 lb/month		3,000 lb/month.
South:						
40½10¼-36½00¼ N. lat.	3,000 lb/month	CLOSED		3,000 lb/month		3,000 lb/month.
South of 36½00¼ N. lat.	CLOSED	3,000 lb/month		3,000 lb/month		3,00 lb/month.
Yellowtail—North [6]	1,500 lb/month			1,500 lb/month		1,500 lb/month.
Bocaccio—South: [6]						
40½10¼-36½00¼ N. lat.	300 lb/month	CLOSED		500 lb/month		300 lb/month.
South of 36½00¼ N. lat.	CLOSED	300 lb/month		500 lb/month		300 lb/month.
Chilipepper—South: [6]						
40½10¼-36½00¼ N. lat.	2,000 lb/month	CLOSED		2,000 lb/month		2,000 lb/month.
South of 36½00¼ N. lat.	CLOSED	2,000 lb/month		2,000 lb/month		2,000 lb/month.
Cowcod—South: [6]						
40½10¼-36½00¼ N. lat.	1 fish per landing	CLOSED		1 fish per landing		1 fish per landing.
South of 36½00¼.	CLOSED	1 fish per landing		1 fish per landing		1 fish per landing.
Minor nearshore rockfish:						
North	2,400 lb/2 months, of which no more than 1,200 lb may be species other than black or blue rockfish [7]		3,000 lb/2months, of which no more than 1,400 lb may be species other than black or blue rockfish			3,000 lb/2 months, of which no more than 1,400 lb may be species other than black or blue rockfish.[7]
South:						
40½10¼-36½00¼ N. lat.	1,000 lb/2 months	CLOSED		1,300 lb/2 months		1,300 lb/2 months.
South of 36½00¼ N. lat.	CLOSED	1,000 lb/2 months		1,300 lb/2months		1,300 lb/2 months.
Lingcod [8]	CLOSED		400 lb/month; size limit 24 inches north, 26 inches south			CLOSED.

[1] Trip limits apply coastwise unless otherwise specified. North means 40½ 10¼ N. lat. to the US-Canada border. ''South'' means 40½ 10¼ N. lat. to the U.S.-Mexico border.
[2] The sablefish size limit does not apply during the daily trip limit fishery, but does apply during the ''regular'' and ''mop-up'' seasons north of 36½ N. lat. See IV.B(2).
[3] Other flatfish means all flatfish listed at 50 CFR 660.302 except those in this Table 4 with a trip limit.
[4] The whiting ''per trip'' limit in the Eureka area for catch inside 100 fathoms is 10,000 lb/trip throughout the year.
[5] Closed means it is prohibited to take and retain, possess, or land the designated species in the time or area indicated (see IV.A(7)).
[6] Yellowtail rockfish and POP in the south and bocaccio, chilipepper, and cowcod rockfishes in the north are included in trip limits for minor shelf rockfish (Table 2).
[7] The ''per trip'' limit for black rockfish off Washington also applies. See paragraph IV.B.(4).
[8] The size limit for lingcod is 24 inches (61 cm) in the north and 26 inches (66 cm) in the south, total length.
To convert pounds to kilograms, divide by 2.20462, the number of pounds in one kilogram.

* * * * *

C. Trip Limits in the Open Access Fishery

* * * * *

(4) *Landings in Pacific City, Oregon.* For purposes of this paragraph, Pacific City, Oregon is the area between 45°20′15″N. lat.

(a) May 1–September 30, 2000: No more than 2,200 lb (998 kg) of minor nearshore rockfish may be landed per month in Pacific City. Within the 2,200 lb (998 kg) monthly limit, no more than 700 lb (318 kg) may be species other than black or blue rockfish.

October 1–December 31, 2000: Groundfish may not be landed in Pacific City, even if harvested in a nongroundfish fishery.

* * * * *

TABLE 5.—2000 TRIP LIMITS [1] FOR ALL OPEN ACCESS GEAR EXCEPT EXEMPTED TRAWL GEAR ENGAGED IN FISHING FOR PINK SHRIMP *

[Read Section IV. A. NMFS Actions before using this table.]

Species/groups	JAN–FEB	MAR–APR	MAY–JUN	JULY–AUG	SEP–OCT	NOV	DEC
Minor slope rockfish:							
North	500 lb/2 months			500 lb/2 months		500 lb/2 months.	
South	500 lb/2 months			500 lb/2 months		500 lb/2 months.	
Splitnose—South	200 lb/month			200 lb/month		200 lb/month.	
POP—North	100 lb/month			100 lb/month		100 lb/month.	
Sablefish:[2]							
North of 36°	300 lb/day, but no more than 2,100 lb/2 months		300 lb/day, but no more than 2,400 lb/2months				
South of 36°	350 lb/day			350 lb/day		350 lb/day.	
Thornyheads (longspine and shortspine combined):							
North of Pt. Conception.	CLOSED [3]			CLOSED		CLOSED.	
South of Pt. Conception.	50 lb/day			50 lb/day		50 lb/day.	
Arrowtooth	200 lb/month			200 lb/month		200 lb/month.	
Dover sole				(included in ''other'' flatfish limit)			
Petrale sole				(included in ''other'' flatfish limit)			
Nearshore flatfish				(included in ''other'' flatfish limit)			
''Other'' flatfish [4]	300 lb/month			300 lb/month		300 lb/month.	
Shoreside whiting	300 lb/month			300 lb/month		300 lb/month.	
Minor shelf rockfish:							
North	100 lb/month			100 lb/month		100 lb/month.	
South:							
40°10′–36°00′ N. lat.	200 lb/month	CLOSED		200 lb/month		200 lb/month.	
South of 36°00′ N. lat.	CLOSED	200 lb/month		200 lb/month		200 lb/month.	
Canary:							
North	50 lb/month			50 lb/month		50 lb/month.	
South:							
40°10′–36°00′ N. lat.	50 lb/month	CLOSED		50 lb/month		50 lb/month.	
South of 36°00′ N. lat.	CLOSED	50 lb/month		50 lb/month		50 lb/month.	
Widow:							
North	3,000 lb/month			3,000 lb/month		3,000 lb/month.	
South:							
40°10′–36°00′ N. lat.	3,000 lb/month	CLOSED		3,000 lb/month		3,000 lb/month.	
South of 36°00′ N. lat.	CLOSED	3,000 lb/month		3,000 lb/month		3,000 lb/month.	
Yellowtail—North [5]	100 lb/month			100 lb/month		100 lb/month.	
Bocaccio—South:[5]							
40°10′–36°00′ N. lat.	200 lb/month	CLOSED		200 lb/month		200 lb/month.	
South of 36°00′ N. lat.	CLOSED	200 lb/month		200 lb/month		200 lb/month.	
Chilipepper—South:[5]							
40°10′–36°00′ N. lat.	2,000 lb/month	CLOSED		2,000 lb/month		2,000 lb/month.	
South of 36°00′ N. lat.	CLOSED	2,000 lb/month		2,000 lb/month		2,000 lb/month.	
Cowcod—South:[5]							
40°10′–36°00′ N. lat.	1 fish per landing	CLOSED		1 fish per landing		1 fish per landing.	
South of 36°00′ N. lat.	CLOSED	1 fish per landing		1 fish per landing		1 fish per landing.	
Minor nearshore rockfish:							

TABLE 5.—2000 TRIP LIMITS [1] FOR ALL OPEN ACCESS GEAR EXCEPT EXEMPTED TRAWL GEAR ENGAGED IN FISHING FOR PINK SHRIMP *—Continued

[Read Section IV. A. NMFS Actions before using this table.]

Species/groups	JAN–FEB	MAR–APR	MAY–JUN	JULY–AUG	SEP–OCT	NOV	DEC
North	1,000 lb/2 months,[6] of which no more than 500 lb may be species other than black or blue rockfish		1,500 lb/2 months,[6 7] of which no more than 700 lb may be species other than black or blue rockfish			1,500 lb/2 months,[6 7] of which no more than 700 lb may be species other than black or blue rockfish.	
South:							
40°10′–36°00′ N. lat.	550 lb/2 months	CLOSED	800 lb/2 months			800 lb/2 months.	
South of 36°00′ N. lat.	CLOSED	550 lb/2 months	800 lb/2 months			800 lb/2 months.	
Lingcod [8]	CLOSED		400 lb/month size limit 24 inches north, 26 inches south			CLOSED.	

[1] Trip limits apply coastwide unless otherwise specified. North means 40°10′ N. lat. to the US-Canada border. ''South'' means 40°10′ N. lat. to the US-Mexico border.
[2] There is no size limit for sablefish taken and retained with nontrawl gear in the open access fishery. See IV.B.2.
[3] Closed means it is prohibited to take and retain, possess, or land the species in the time or area indicated (see IV.A.(7)).
[4] Other flatfish means all flatfish listed at 50 CFR 660.302 except those in this Table 5 with a trip limit.
[5] Yellowtail rockfish and POP in the south and bocaccio, chilipepper, and cowcod rockfishes in the north are included in the trip limits for minor shelf rockfish in the appropriate area (Table 2).
[6] The ''per trip'' limit for black rockfish off Washington also applies. See paragraph IV.B.(4).
[7] Provisions for landing groundfish in Pacific City, OR are found at paragraph IV.C.(4).
[8] The size limit for lingcod is 25 inches (61 cm) in the north and 26 inches (66 cm) in the south, total length.
To convert pounds to kilograms, divide by 2.20462, the number of pounds in one kilogram.

* * * * *

Classification

These actions are authorized by the regulations implementing the FMP and the emergency rule published at 65 FR 221 (January 4, 2000), and are based on the most recent data available. The aggregate data upon which these actions are based are available for public inspection at the office of the Administrator, Northwest Region, NMFS (see **ADDRESSES**) during business hours.

NMFS finds good cause to waive the requirement to provide prior notice and an opportunity for public comment on this action pursuant to 5 U.S.C. 553(b)(B), because providing prior notice and opportunity for comment would be impracticable. It would be impracticable because the next cumulative limit period begins on May 1, 2000, and affording additional notice and opportunity for public comment would impede the due and timely execution of the agency's function of managing fisheries to achieve OY. In addition, the affected public had the opportunity to comment on these actions at the April 3–7, 2000 Council meeting.

NMFS also finds good cause to waive the 30-day delay in effectiveness pursuant to 5 U.S.C. 553(d)(1), because all of the trip limit changes in this notice liberalize trip limits, thereby relieving restrictions. This action should be implemented at the beginning of the cumulative trip limit period to avoid confusion and provide fishers the uninterrupted opportunity to achieve the new trip limits. For these reasons good cause exists to waive the 30-day delay in effectiveness.

These actions are taken under the authority of 50 CFR 660.323(b)(1), and are exempt from review under E.O. 12866.

Authority: 16 U.S.C. 1801 *et seq.*

Dated: April 28, 2000.

Bruce C. Morehead,

Acting Director, Office of Sustainable Fisheries, National Marine Fisheries Service.

[FR Doc. 00–11108 Filed 5–1–00; 3:07 pm]

BILLING CODE 3510–22–M

DEPARTMENT OF COMMERCE

National Oceanic and Atmospheric Administration

50 CFR Part 648

[Docket No. 000426114–0114–01; I.D. 041000F]

RIN 0648–AN53

Fisheries of the Northeastern United States; Spiny Dogfish Fishery; 2000 Specifications

AGENCY: National Marine Fisheries Service (NMFS), National Oceanic and Atmospheric Administration (NOAA), Commerce.

ACTION: Interim final rule; request for comments.

SUMMARY: NMFS implements specifications and seasonal trip limits for fishing year 2000 (May 1, 2000, through April 30, 2001) for the spiny dogfish (*Squalus acanthias*) fishery. This action establishes a total quota for the 2000 fishing year and sets aside a portion of the total quota for vessels participating in spiny dogfish exempted fishing projects. This interim final rule is implemented to prevent overfishing of spiny dogfish.

DATES: Effective May 1, 2000, through October 28, 2000. Comments must be received at the appropriate address or fax number (see **ADDRESSES**) no later than 5 p.m., eastern daylight time, June 5, 2000.

ADDRESSES: Comments on this interim final rule should be sent to Patricia A. Kurkul, Regional Administrator, Northeast Regional Office, NMFS, 1 Blackburn Drive, Gloucester, MA 01930–2298. Please mark the envelope ''Comments—2000 Spiny Dogfish Specifications.'' Comments also may be sent via facsimile (fax) to 978–281–9135. Comments will not be accepted if submitted via e-mail or Internet. Copies of documents supporting this action are available from the Regional Office at the address specified here.

FOR FURTHER INFORMATION CONTACT: Peter W. Christopher, Fishery Policy Analyst, 978–281–9288, fax 978–281–

9135, e-mail *peter.christopher@noaa.gov*.

SUPPLEMENTARY INFORMATION: The Spiny Dogfish Fishery Management Plan (FMP) was partially approved by NMFS on behalf of the Secretary of Commerce (Secretary) on September 29, 1999, and the final rule implementing the FMP was published on January 10, 2000, and initially scheduled to be effective on February 10, 2000. Included among the approved management measures in the FMP is a requirement that the Mid-Atlantic Fishery Management Council (Mid-Atlantic Council) and New England Fishery Management Council (New England Council) jointly develop annual specifications, which include a commercial quota to be allocated on a semi-annual basis, and other restrictions to assure that fishing mortality targets will not be exceeded. Both the Mid-Atlantic and New England Councils recommended a commercial quota specification and trip limits to achieve the FMP's objectives for fishing year 2000 at their respective meetings in November and December 1999. However, the Councils failed to reach agreement on a preferred commercial quota and trip limit measure for this action. While the Mid-Atlantic Council recommended a quota of 2.9 million lb (1,316 mt) and a trip limit of 300 lb (136 kg), the New England Council recommended a quota of 22 million lb (10,000 mt) and a trip limit of 7,000 lb (3,175 kg) for the first quota period and a trip limit of not more than 7,000 lb (3,175 kg) for the second quota period.

Reasons for Delay of the Final Rule Effective Date

On February 10, 2000, NMFS, on behalf of the Secretary, delayed the effective date of the final rule for the FMP until March 15, 2000 (65 FR 7460, February 15, 2000), in order to provide the Councils with the opportunity to come to an agreement on how to proceed with implementation of the FMP. The effective date of the final rule was subsequently delayed until March 27, 2000, to provide additional time for the Councils to reconcile their differences. The Mid-Atlantic Council met on March 16, 2000 and voted to support its original recommendation for the specifications. The New England Council met on March 23, 2000 and voted to recommend a reduced quota of 14.3 million lb (6,500 mt) and a trip limit of 7,000 lb (3,175 kg) for both quota periods. The effective date of the final rule to implement the FMP was delayed again, until April 3, 2000, to provide additional time to consider options for the spiny dogfish specifications for the 2000 fishing year. As a result of the Councils' inability to reach agreement, NMFS, on behalf of the Secretary, is issuing this rule establishing a quota and trip limits for fishing year 2000 under its interim authority.

Need To End Overfishing

The FMP specifies that a fishing mortality rate (F) of 0.03 on female spiny dogfish is required for the 3-year period from May 1, 2000, through April 30, 2003, to end overfishing on spiny dogfish. The FMP further specifies that the commercial quota be subdivided into two semi-annual quota periods as follows: The period from May 1 through October 31 (quota period 1) is allocated 57.9 percent of the annual quota, and the period from November 1 through April 30 (quota period 2) is allocated 42.1 percent of the annual quota. The current F on female spiny dogfish has been recently estimated to be approximately 0.42, indicating that severe overfishing is occurring. If overfishing is occurring in a fishery, section 305(c) of the Magnuson-Stevens Fishery Conservation and Management Act (Magnuson-Stevens Act) provides that the Secretary may implement interim measures necessary to address overfishing. The quota and management measures in this interim final rule particularly address the overfishing that is occurring on females in the spiny dogfish fishery. This is an immediate problem that will become more serious if implementation of management measures to end overfishing is delayed beyond the start of the fishing year on May 1, 2000.

Interim Final Rule Measures

This interim final rule implements 2000 specifications for the spiny dogfish fishery, including a total quota of 4.5 million lb (2,041 mt), of which 4 million lb (1,814 mt) is allocated to the commercial fishery and 500,000 lb (226.7 mt) as a set-aside for spiny dogfish exempted fishing projects. Quota period 1 is allocated 57.9 percent, or 2,316,000 lb (1,050 mt), of the commercial quota, and quota period 2 is allocated 42.1 percent, or 1,684,000 lb (764 mt), of the commercial quota. In addition, this interim final rule establishes seasonal spiny dogfish trip limits of 600 lb (272 kg) for quota period 1, and 300 lb (136 kg) for quota period 2. The measures are necessary to end overfishing and to achieve the target F of 0.03 for fishing year 2000.

The spiny dogfish exempted fishing quota set-aside of 500,000 lb (226.7 mt) will be allocated to vessels participating in projects designed to improve selectivity of spiny dogfish fishing gear and methods. The primary goal in providing this incentive for such projects is to investigate ways to shift fishing effort away from female spiny dogfish, which in turn would help to rebuild the female portion of the stock and provide greater balance in terms of the ratio in the stock of females to males. In addition, spiny dogfish gear-selectivity studies could improve current information on the species, including bycatch and discard mortality. Interested parties are required to submit proposals pursuant to the provisions for experimental fishing under 50 CFR 648.12, and the provisions for exempted fishing set forth in 50 CFR 600.745.

There is uncertainty and variability in the population estimates for spiny dogfish. While landings associated with the mean estimated population size would be 2.9 million lb (1,316 mt) with a fishing mortality rate of F = 0.03, a range of populations, considering uncertainty in the estimates, would result in landings of approximately 1.7 million lb (771 mt) to 4.5 million lb (2,041 mt) with a fishing mortality rate of F = 0.03. Uncertainty in the population estimates therefore indicate that a 2000 fishing year quota of 4.5 million lb (2,041 mt), which is higher than that recommended in the FMP, could still achieve an F of 0.03, although at a reduced probability. The trip limits contained in this rule are probably low enough to end the directed fishery for spiny dogfish and improve the likelihood that the measures will achieve an F of 0.03. This is because vessel operators are likely to avoid spiny dogfish. Although discarding of spiny dogfish would likely continue in the non-directed fisheries, it is not expected to cause negative impacts that have not already been considered in the FMP. The spiny dogfish exempted fishing quota set-aside of 500,000 lb (226.7 mt) is not expected to impact negatively the goals of the FMP. Projects would be developed to investigate ways to avoid catch and discards of female spiny dogfish. The effect of the projects on female dogfish will depend on the degree of targeting that occurs and the survival rate of discarded female dogfish. Both aspects will be important to consider and to measure during the projects.

The trip limits for quota periods 1 and 2 will probably eliminate the directed fishery, and they are likely to have similar impacts on spiny dogfish trips during the respective quota periods, based on an analysis of recent NMFS landings data. Trip limits of 300 lb (136 kg) during quota period 2 and 600 lb

(272 kg) during quota period 1, will each impact approximately 67 percent of trips after which spiny dogfish are landed.

An analysis of the trip limits examined the expected reduction in the regulatory discards of spiny dogfish based on economic decisions of vessel owners when faced with the subject trip limits. This analysis indicates that trip limits, in combination with a low commercial quota, will produce a high level of regulatory discards because spiny dogfish are caught in nearly all major fisheries in the region. However, the goal of the FMP and the 2000 specifications is to eliminate the directed fishery in order to meet the F of 0.03 target. According to the FMP, high discards are also associated with the directed spiny dogfish fishery because the spiny dogfish landed in this fishery are primarily large females; smaller spiny dogfish are usually discarded. Thus, providing for a low trip limit that eliminates the directed fishery should decrease the mortality on female spiny dogfish. In addition, since dogfish is a low value species that is difficult to handle onboard vessels, the projection of spiny dogfish discards in the trip limit analyses is presumed to be overestimated; vessel owners are expected to make efforts to avoid spiny dogfish while targeting other species because of the effort associated with discarding them.

Alternatives Proposed by the Councils

Mid-Atlantic Council Alternative

The Mid-Atlantic Council recommended a commercial quota of 2,901,254 lb (1,316 mt) and a trip limit of 300 lb (136 kg) for both quota periods. The Mid-Atlantic Council's rationale for its recommendation is as follows: (1) The commercial quota associated with the F = 0.03 target for fishing year 2000 (as specified in the FMP) is 2,901,254 lb (1,316 mt); (2) a trip limit of 300 lb (136 kg) is expected to produce, on average, the level of landings specified in the FMP during the rebuilding period to achieve an F of 0.03; (3) the intent of the FMP is to close the directed fishery for adult female spiny dogfish after year one of the rebuilding period and allow for the landing of incidental catch of spiny dogfish only during the rebuilding period; and (4) these restrictions will prevent a derby fishery and allow for a more equitable distribution of landings in time and space. The Mid-Atlantic Council submitted to NMFS a proposed rule to implement its recommendations; however, that proposed rule was not published in the **Federal Register**.

New England Council Alternatives

The New England Council initially recommended a commercial quota of 22,059,228 lb (10,006 mt) and a trip limit of 7,000 lb (3,175 kg) for quota period 1 and a trip limit of not more than 7,000 lb (3,175 kg) for quota period 2. The New England Council reasoned that the higher commercial quota, combined with a high trip limit, would allow the directed fishery to operate for another year. The New England Council believed that a commercial quota of 22,059,228 lb (10,006 mt) would provide for as much as a 50–percent reduction of landings from 1990 to 1997 levels. Initially, the New England Council was concerned that discarding of spiny dogfish would overwhelm stock rebuilding goals and that the directed fishery should be maintained while the Councils determine the appropriate rebuilding target and management measures to control discarding. After reconsidering their recommendation at the request of the Secretary, the New England Council supported a quota of 14.3 million lb (6,486 mt), which the New England Council believed would end overfishing and allow a limited fishery to continue. The New England Council felt that a trip limit of 7,000 lb (3,175 kg) would not encourage a directed fishery but would instead allow vessels to land dogfish that would have been discarded. When combined with discards of spiny dogfish in other fisheries, the New England Council argued that the discards associated with a low trip limit would undermine the goals of the FMP.

Economic Impact Analysis

NMFS prepared an analysis of economic impacts on small entities was prepared for this interim final rule. It analyzes impacts of measures in this interim final rule and incorporates information contained in an initial regulatory flexibility analysis prepared by the Mid-Atlantic Council for the initial proposed rule submission.

The reasons why this action was considered and is being taken by NMFS by interim final rulemaking are described elsewhere in the preamble. Likewise, the objectives and the legal basis for this interim final rule are covered earlier in the preamble.

The small entities considered in the analysis include 512 vessels that have reported spiny dogfish landings to NMFS. Vessels that did not have a Federal fishery permit in 1998, such as vessels that fish in state waters only, were not included in the analysis. Although it is likely that the measures would have some impact on the activity of these vessels, should their owners choose to acquire a Federal spiny dogfish permit, the magnitude of this impact could not be determined.

There are no new reporting or recordkeeping requirements contained in the preferred alternative or any of the other alternatives that were considered for this action. No relevant Federal rules are known to duplicate, overlap or conflict with the measures contained in this interim final rule.

The 500,000-lb portion of the 4.5-million lb quota is established to minimize the economic effects of the quota without compromising the objective of the FMP to begin rebuilding the spiny dogfish stock, especially the adult female portion.

Analysis of the action considers a preferred alternative having a commercial quota of 4 million lb (1,814 mt), and trip limits of 600 lb (272 kg) in quota period 1 and 300 lb (136 kg) in quota period 2. Economic impacts on small entities are also analyzed under four alternative options: (1) a commercial quota of 2,901,254 lb (1,316 mt) and a trip limit of 300 lb (136 kg) for both quota periods (Mid-Atlantic Council Option); (2) a commercial quota of 22,059,228 lb (10,006 mt) and a trip limit of 7,000 lb (3,175 kg) for quota period 1 and up to 7,000 lb (3,175 kg) for quota period 2 (the New England Council's original recommendation); (3) a commercial quota of 2,901,254 lb (1,316 mt), trip limits of 600 lb (272 kg) for quota period 1 and 300 lb (136 kg) for quota period 2; and (4) a no action alternative.

A large portion of affected vessels identified in the analysis would likely experience revenue losses under any of the options. Under the no action alternative, with no quota or management measures, the FMP projects that landings of spiny dogfish would decrease approximately 50 percent from 1998 levels to 25.5 million lb (11,576 mt) in fishing year 2000, due to continued declines in stock size as the result of overfishing. The analysis projects that this reduction in spiny dogfish landings from 1998 levels would result in lower revenues for a large portion of the industry. Of the four options, the Mid-Atlantic Council's option would have the greatest negative economic impact on vessels.

An analysis was conducted for the trip limits of 600 lb (272 kg) and 300 lb (136 kg) based on possible economic decisions of vessel owners during spiny dogfish trips. The trip limit analysis includes estimates of the reduction in the number of trips, the level of landings during the quota period and projected closure dates of the quota

periods. The analysis projected that, on average, under a trip limit of 600 lb (272 kg) for quota period 1, landings will exceed the semi-annual quota of 2,316,000 lb (1,050 mt) on about September 5, 2000 (128 days into the quota period). During quota period 2, however, if a 300–lb trip limit was in effect, landings were projected not to exceed the semi-annual quota of 1,684,000 lb (764 mt). The analysis projected landings of only 615,000 lb (279 mt) during quota period 2. Thus, approximately 1,069,000 lb (485 mt) of allowable spiny dogfish landings were projected not to be landed. Although the commercial quota is 4 million lb (1,814 mt), total projected landings are projected to reach only 2,930,000 lb (1,329 mt). However, the analysis does not account for behavioral changes by vessel operators, which could impact the amount of landings. Also, since vessels without Federal permits are not captured in the analysis, additional landings are likely to occur. In comparison to the Mid-Atlantic Council option, the impact on small entities is less severe.

Based on the economic analysis of the trip limit for quota period 1, and considering a commercial quota of 2,901,254 lb (1,316 mt), trip limits of 300 lb (136 kg), 600 lb (272 kg), and 7,000 lb (3,175 kg) are estimated to eliminate approximately 28 percent, 26 percent and 28 percent, respectively, of fishing trips after which spiny dogfish are landed. While some impacted vessels would continue to make trips and land only up to the trip limits, a portion of the impacted trips, i.e. 28 percent, 26 percent and 28 percent of trips under trip limits of 300 lb (136 kg), 600 lb (272 kg) and 7,000 lb (3,175 kg), respectively, in quota period 1, would cease because the trip limit would not provide for profitable trips. The number of trips that are eliminated under a 7,000–lb trip limit increase because the length of the season under the high trip limit would be significantly reduced. Dogfish sell at around 16 cents per pound. It is possible that the effort from the eliminated spiny dogfish trips could move into other fisheries where vessels may make up for the lost revenue. However, it is not clear at what level this would occur or how much additional revenue it would create for the vessels.

Although more vessels would find it profitable to land spiny dogfish under a trip limit of 7,000 lb (3,175 kg) while the season is open, a trip limit of 7,000 lb (3,175 kg) would not meet the objectives of the FMP because it would not end the directed fishery. Vessels may still be able to make profitable trips by directing on other species and landing up to the trip limit of 600 lb (272 kg) or 300 lb (136 kg) of spiny dogfish. Revenues from spiny dogfish alone would be minimal, but the lower trip limits will likely end the directed fishery and be consistent with the FMP. If major spiny dogfish markets are eliminated as a result of low supply due to a low trip limit or quick closure of the fishery, much of the revenue from the spiny dogfish fishery would also be drastically reduced.

The spiny dogfish exempted fishing quota set-aside of 500,000 lb (226.7 mt) will provide additional revenue for participating vessels, although the level cannot be determined without an estimate of the number of vessels that would participate in the exempted fishing projects. In addition, it is likely that research organizations may provide additional funding as compensation for the use of the vessels in the projects.

The impact of the annual specifications for 2000 contained in this interim final rule will be greatest in Massachusetts, North Carolina, Maryland, Maine and New Jersey, which account cumulatively for 90 percent of spiny dogfish landings from 1988 through 1997. Further, the communities of Wachapreague, VA; Plymouth, MA; and Scituate, MA, have benefitted from dogfish landings that made up 76 percent, 76 percent, and 21 percent, respectively, of the value of all landed fish, based on 1997 NMFS landings data. Communities such as these, and others that have relatively high income from dogfish landings compared to landings of other species, will be most impacted by the commercial quota and trip limit in the specifications. The analysis also concludes that small vessels (25 to 49 ft (7.6 to 14.9 m)), which constitute 88 percent of the affected vessels, would be particularly impacted under any option. However, if no action is taken, communities benefitting from dogfish landings would experience greater lost revenues in the long term due to stock collapse as a result of the directed fishery. Long-term benefits to the stocks and revenues resulting from rebuilt stocks are expected to outweigh the short-term negative impacts to the sectors of the fishing industry that have utilized the spiny dogfish resource.

Following is a summary of the impacts that would be expected by implementing the alternatives that were considered by the Councils.

The Mid-Atlantic Council recommended a commercial quota of 2,901,254 lb (1,316 mt) and a trip limit of 300 lb (136 kg) for both quota periods during fishing year 2000. Based on the analyses, the Mid-Atlantic Council option would result in the greatest reduction in revenues of the options considered. The only difference between the Mid-Atlantic Council's trip limit recommendation and the action in this interim final rule is that the trip limit for quota period 1 under the Mid-Atlantic Council option would be 300 lb (136 kg), rather than 600 lb (272 kg) in this interim final rule. With a trip limit of 300 lb (136 kg) for quota period 2, the quota would not be expected to be exceeded and the fishery would not close, although revenues per trip would be small due to the low trip limit and low value of spiny dogfish. The lower trip limit would be more likely to cause immediate loss of spiny dogfish markets as a result of low supply. The revenue losses associated with a trip limit of 300 lb (136 kg) in quota period 1 is expected to be higher than those associated with a trip limit of 600 lb (272 kg).

The New England Council recommended a quota of 22,059,228 lb (10,006 mt) for fishing year 2000 and a trip limit of 7,000 lb (3,175 kg) in quota period 1 and up to 7,000 lb (3,175 kg) in quota period 2. The higher commercial quota would provide for a directed fishery for spiny dogfish that would likely last for the majority of the quota periods, thus providing vessels the ability to sell spiny dogfish for a longer period of time. Further, the higher trip limits would allow higher per trip revenues from spiny dogfish and would reduce regulatory discards. However, even under this option, a large number of vessels would likely still suffer revenue losses compared to 1998 revenues because stock abundance has declined. The New England Council's recommended quota would likely result in fishing mortality approaching an F of 0.3, thus well exceeding the target F of 0.03, and the high trip limit would encourage directed spiny dogfish fishing, both of which are counter to the objectives of the FMP. Further, long-term revenues to participants in the fishery would likely be reduced due to future reductions in landings that could be required due to overfishing caused by directed fishing on spiny dogfish.

The trip limit analysis was not applied to the New England Council's more recent quota recommendation of a 14,300,000 lb (6,500 mt) and trip limit of 7,000 lb (3,175 kg), but the economic impacts would be greater than those associated with the Council's original recommendation of a quota of 22,059,228 lb (10,006 mt) and trip limit of 7,000 lb (3,175 kg). Because of the lower quota, the fishery would close earlier and more vessels would

experience revenue losses due to the closure.

Under the no action alternative, the spiny dogfish fishery would remain unregulated and fishing mortality could be expected to remain at or near an F of 0.43, consistent with current projected fishing mortality. With no restrictions, the FMP projects that landings would decline to about 25.5 million lb (11,576 mt) in fishing year 2000 due to continued reductions in the stock size. Revenues would decline due to the projected 41 percent reduction in landings.

Classification

The Assistant Administrator for Fisheries, NOAA (AA), finds that it would be impracticable and contrary to the public interest to provide prior notice of and opportunity for public comment on this action. These measures must be in place by May 1, 2000, the start of the fishing year. Any delay in preventing overfishing increases the likelihood of a loss of long-term productivity of the spiny dogfish resource and increases the probability that more severe restrictions would be needed in the future. Therefore, the AA finds good cause under 5 U.S.C. 553(b)(B) to waive prior notice and the opportunity for public comment.

Similarly, it is in the public interest to implement these measures by the beginning of the next fishing year (May 1, 2000) in order to prevent overfishing and reduce the likelihood of long term productivity losses and more severe restrictions in the future. Therefore, the AA finds good cause under 5 U.S.C. 553(d)(3) not to delay for 30 days the effectiveness of this interim final rule.

This interim final rule has been determined to be significant for the purposes of E.O. 12866.

Because prior notice and opportunity for public comment are not required for this interim final rule by 5 U.S.C. 553, or any other law, the analytical requirements of the Regulatory Flexibility Act, 5 U.S.C. 601 *et seq.*, are inapplicable. Nevertheless, NMFS prepared an economic analysis as part of the regulatory impact review, which describes the impact this interim final rule will have on small entities. This economic analysis is described in the **SUPPLEMENTARY INFORMATION** section of the preamble to this interim final rule.

The President has directed Federal agencies to use plain language in their communications with the public, including regulations. To comply with this directive, we seek public comment on any ambiguity or unnecessary complexity arising from the language used in this interim final rule.

List of Subjects in 50 CFR Part 648

Fisheries, Fishing, Reporting and recordkeeping requirements.

Dated: May 1, 2000.

Penelope D. Dalton,

Assistant Administrator for Fisheries, National Marine Fisheries Service.

For the reasons stated in the preamble, 50 CFR part 648 is amended as follows:

PART 648—FISHERIES OF THE NORTHEASTERN UNITED STATES

1. The authority citation for part 648 continues to read as follows:

Authority: 16 U.S.C. 1801 *et seq.*

2. In § 648.14, paragraph (aa)(7) is added to read as follows:

§ 648.14 Prohibitions.

* * * * *

(aa) * * *

(7) Land per trip more than the trip limit of spiny dogfish specified under § 648.235.

3. In § 648.235, the heading is revised and paragraphs (a) and (b) are added to read as follows:

§ 648.235 Possession and trip limit restrictions.

(a) *Quota Period 1*. From May 1 through October 31, vessels issued a valid Federal spiny dogfish permit specified under § 648.4(a)(11) may land up to 600 lb (272 kg) of spiny dogfish per trip.

(b) *Quota Period 2*. From November 1 through April 30, vessels issued a valid Federal spiny dogfish permit specified under § 648.4(a)(11) may land up to 300 lb (136 kg) of spiny dogfish per trip.

[FR Doc. 00–11107 Filed 5–1–00; 3:27 pm]

BILLING CODE 3510–22–F

Proposed Rules

Federal Register
Vol. 65, No. 87
Thursday, May 4, 2000

This section of the FEDERAL REGISTER contains notices to the public of the proposed issuance of rules and regulations. The purpose of these notices is to give interested persons an opportunity to participate in the rule making prior to the adoption of the final rules.

DEPARTMENT OF TRANSPORTATION

Federal Aviation Administration

14 CFR Part 39

[Docket No. 99–NE–48–AD]

RIN 2120–AA64

Airworthiness Directives; General Electric Aircraft Engines CT7 Series Turboprop Engines

AGENCY: Federal Aviation Administration, DOT.

ACTION: Notice of proposed rulemaking (NPRM).

SUMMARY: This document proposes the adoption of a new airworthiness directive (AD) that is applicable to certain General Electric Aircraft Engines (GEAE) CT7 series turboprop engines. This proposal would require initial and repetitive inspections of the propeller gearbox (PGB) oil filter impending bypass button (IBB) for extension (popping). This proposal would also require follow-on inspections, maintenance, and replacement actions if the PGB oil filter IBB is popped; and if necessary, replacement of the PGB with a serviceable PGB. In addition, this proposal would require a one-time removal of possibly improperly hardened PGB input pinions and replacement with PGB input pinions that were manufactured using the proper hardening process as terminating action to the repetitive inspections. This proposal is prompted by reports of improperly hardened PGB input pinions. The actions specified by the proposed AD are intended to prevent PGB input pinion failure, which could result in PGB failure and an in-flight engine shutdown.

DATES: Comments must be received by July 3, 2000.

ADDRESSES: Submit comments to the Federal Aviation Administration (FAA), New England Region, Office of the Regional Counsel, Attention: Rules Docket No. 99–NE–48–AD, 12 New England Executive Park, Burlington, MA 01803–5299. Comments may also be sent via the Internet using the following address: ''9-ane-adcomment@faa.gov''. Comments sent via the Internet must contain the docket number in the subject line. Comments may be inspected at this location between 8:00 a.m. and 4:30 p.m., Monday through Friday, except Federal holidays.

The service information referenced in the proposed rule may be obtained from General Electric Aircraft Engines, 1000 Western Ave, Lynn, MA 01910; telephone (781) 594–3140, fax (781) 594–4805. This information may be examined at the FAA, New England Region, Office of the Regional Counsel, 12 New England Executive Park, Burlington, MA.

FOR FURTHER INFORMATION CONTACT: Barbara Caufield, Aerospace Engineer, Engine Certification Office, FAA, Engine and Propeller Directorate, 12 New England Executive Park, Burlington, MA 01803–5299; telephone (781) 238–7173, fax (781) 238–7199.

SUPPLEMENTARY INFORMATION:

Comments Invited

Interested persons are invited to participate in the making of the proposed rule by submitting such written data, views, or arguments as they may desire. Communications should identify the Rules Docket number and be submitted to the address specified above. All communications received on or before the closing date for comments, specified above, will be considered before taking action on the proposed rule. The proposals contained in this notice may be changed in light of the comments received.

Comments are specifically invited on the overall regulatory, economic, environmental, and energy aspects of the proposed rule. All comments submitted will be available, both before and after the closing date for comments, in the Rules Docket for examination by interested persons. A report summarizing each FAA-public contact concerned with the substance of this proposal will be filed in the Rules Docket.

Commenters wishing the FAA to acknowledge receipt of their comments submitted in response to this notice must submit a self-addressed, stamped postcard on which the following statement is made: ''Comments to Docket Number 99–NE–48–AD.'' The postcard will be date stamped and returned to the commenter.

Availability of NPRMs

Any person may obtain a copy of this NPRM by submitting a request to the FAA, New England Region, Office of the Regional Counsel, Attention: Rules Docket No. 99–NE–48–AD, 12 New England Executive Park, Burlington, MA 01803–5299.

Discussion

The Federal Aviation Administration (FAA) has received reports of improperly hardened propeller gearbox (PGB) input pinions installed on General Electric Aircraft Engines (GEAE) CT7 series turboprop engines. The investigation revealed that the manufacturing process for PGB input pinions changed in September 1996. Two PGB input pinions have been found with nonconforming material hardness and case depth, which led to premature pinion wear. Premature pinion wear may be detected by daily IBB inspections and follow-on inspections if the IBB is popped. The requirement to inspect the IBB for extension daily ensures early detection of premature pinion wear. This condition, if not corrected, could result in PGB input pinion failure, which could result in PGB failure and an in-flight engine shutdown.

Service Bulletins (SB's)

The FAA has reviewed and approved the technical contents of GEAE (CT7–TP Series) SB 72–422, Revision 2, dated November 3, 1999, that describes procedures for inspections of the PGB oil filter impending bypass button (IBB) for extension (popping), and if the PGB oil filter IBB is popped, follow-on inspections, maintenance, and replacement actions. This SB also describes rejection criteria for replacing the PGB, if necessary. Finally, this SB identifies PGB's by serial number (SN) that require inspection.

The FAA has also has reviewed and approved the technical contents of GEAE (CT7–TP Series) SB 72–423, dated June 1, 1999, that describes procedures for replacing possibly improperly hardened PGB input pinions with PGB input pinions manufactured using the proper hardening process. In addition, this SB identifies the PGB input pinions by SN and the SN of the

last known PGB in which those input pinions were installed.

Proposed Actions

Since an unsafe condition has been identified that is likely to exist or develop on other products of this same type design, the proposed AD would require an initial inspection of the PGB oil filter IBB for popping within 50 hours time-in-service (TIS) after the effective date of this AD. If the PGB oil filter IBB is popped, this proposed AD would require follow-on inspections, maintenance, and replacement actions, and if necessary, replacement of the PGB with a serviceable PGB. Following the initial inspection of the PGB oil filter IBB, the inspections would take place each operational day.

Terminating Action

In addition, this AD would require, at the next return of the PGB to a CT7 turboprop overhaul facility after the effective date of this AD, replacing possibly improperly hardened PGB input pinions with PGB input pinions manufactured the proper hardening process. Installation of a PGB input pinion manufactured using the proper hardening process constitutes terminating action to the repetitive inspections. The actions would be required to be accomplished in accordance with the SB's described previously.

Economic Analysis

There are approximately 170 engines of the affected design installed on aircraft of US registry that would be affected by this proposed AD. The FAA estimates that each IBB inspection would take approximately 0.25 work hours per engine, and the average labor rate is $60 per work hour. Follow-on borescope inspections would take approximately 4 work hours per engine; unscheduled PGB removal and replacement would take 60 work hours per engine. Therefore, the total cost impact on US operators would be approximately $663,000.

Regulatory Impact

This proposal does not have federalism implications, as defined in Executive Order 13132, because it would not have a substantial direct effect on the States, on the relationship between the national government and the States, or on the distribution of power and responsibilities among the various levels of government. Accordingly, the FAA has not consulted with state authorities prior to publication of this proposal.

For the reasons discussed above, I certify that this proposed regulation (1) is not a ''significant regulatory action'' under Executive Order 12866; (2) is not a ''significant rule'' under the DOT Regulatory Policies and Procedures (44 FR 11034, February 26, 1979); and (3) if promulgated, will not have a significant economic impact, positive or negative, on a substantial number of small entities under the criteria of the Regulatory Flexibility Act. A copy of the draft regulatory evaluation prepared for this action is contained in the Rules Docket. A copy of it may be obtained by contacting the Rules Docket at the location provided under the caption **ADDRESSES.**

List of Subjects in 14 CFR Part 39

Air transportation, Aircraft, Aviation safety, Safety.

The Proposed Amendment

Accordingly, pursuant to the authority delegated to me by the Administrator, the Federal Aviation Administration proposes to amend part 39 of the Federal Aviation Regulations (14 CFR part 39) as follows:

PART 39—AIRWORTHINESS DIRECTIVES

1. The authority citation for part 39 continues to read as follows:

Authority: 49 U.S.C. 106(g), 40113, 44701.

§ 39.13 [Amended]

2. Section 39.13 is amended by adding the following new airworthiness directive:

General Electric Aircraft Engines: Docket No. 99–NE–48–AD.

Applicability: General Electric Aircraft Engines (GEAE) CT7 series turboprop engines, with propeller gearboxes (PGB's) and PGB input pinions identified by serial number (SN) in Table 1 of GEAE (CT7–TP Series) Service Bulletin (SB) 72–422, Revision 2, dated November 3, 1999, and in Table 1 of GEAE (CT7–TP Series) SB 72–423, dated June 1, 1999. These engines are installed on but not limited to SAAB 340 series airplanes.

Note 1: This airworthiness directive (AD) applies to each engine identified in the preceding applicability provision, regardless of whether it has been modified, altered, or repaired in the area subject to the requirements of this AD. For engines that have been modified, altered, or repaired so that the performance of the requirements of this AD is affected, the owner/operator must request approval for an alternative method of compliance in accordance with paragraph (e) of this AD. The request should include an assessment of the effect of the modification, alteration, or repair on the unsafe condition addressed by this AD; and, if the unsafe condition has not been eliminated, the request should include specific proposed actions to address it.

Compliance: Required as indicated, unless accomplished previously.

To prevent PGB input pinion failure, which could result in PGB failure and an in-flight engine shutdown, accomplish the following:

Inspections

(a) Inspect the PGB oil filter impending bypass button (IBB) for extension (popping) in accordance with the following schedule:

(1) Initially inspect within 50 hours time-in-service (TIS) after the effective date of this AD.

(2) Thereafter, inspect each operational day.

(b) If the PGB oil filter IBB is popped, replace the oil filter and perform follow-on inspections immediately. Perform PGB maintenance, or replace the PGB with a serviceable PGB, if necessary; in accordance with the Accomplishment Instructions of GEAE (CT7–TP Series) SB 72–422, Revision 2, dated November 3, 1999. Then comply with (a) or (c).

(c) At the next return of the PGB to a CT7 turboprop overhaul facility after the effective date of this AD, but no later than one year after the effective date of this AD, remove from service improperly hardened PGB input pinions and replace with airworthy PGB input pinions manufactured using the proper hardening process, in accordance with the Accomplishment Instructions of GEAE (CT7–TP Series) SB 72–423, dated June 1, 1999.

Terminating Action

(d) Installation of a PGB input pinion in accordance with paragraph (c) of this AD constitutes terminating action to the repetitive inspections required by paragraph (a) of this AD.

Alternative Methods of Compliance

(e) An alternative method of compliance or adjustment of the compliance time that provides an acceptable level of safety may be used if approved by the Manager, Engine Certification Office (ECO). Operators shall submit their request through an appropriate FAA Principal Maintenance Inspector, who may add comments and then send it to the Manager, ECO.

Note 2: Information concerning the existence of approved alternative methods of compliance with this airworthiness directive, if any, may be obtained from the ECO.

Ferry Flights

(f) Special flight permits may be issued in accordance with sections 21.197 and 21.199 of the Federal Aviation Regulations (14 CFR 21.197 and 21.199) to operate the aircraft to a location where the requirements of this AD can be accomplished.

Issued in Burlington, Massachusetts, on April 27, 2000.

David A. Downey,

Assistant Manager, Engine and Propeller Directorate, Aircraft Certification Service.

[FR Doc. 00–11178 Filed 5–3–00; 8:45 am]

BILLING CODE 4910–13–P

LIBRARY OF CONGRESS

Copyright Office

37 CFR Part 201

[Docket No. RM 99–7C]

Exemption to Prohibition on Circumvention of Copyright Protection Systems for Access Control Technologies

AGENCY: Copyright Office, Library of Congress.

ACTION: Announcement of change in time a hearing will begin.

SUMMARY: The Copyright Office of the Library of Congress announces a change in the time of a public hearing on the possible exemptions to the prohibition against circumvention of technological measures that control access to copyrighted works to be held in Stanford, California on May 18, 2000. The date and location of the hearing remain unchanged

DATES: May 4, 2000.

FOR FURTHER INFORMATION CONTACT: Robert Kasunic, Senior Attorney, Office of the General Counsel, Copyright GC/I&R, P.O. Box 70400, Southwest Station, Washington, D.C. 20024. Telephone: (202) 707–8380. Telefax: (202) 707–8366.

SUPPLEMENTARY INFORMATION: The Copyright Office is conducting a rulemaking pursuant to 17 U.S.C. 1201(a)(1), which provides that the Librarian of Congress may exempt certain classes of works from the prohibition against circumventing a technological measure that controls access to a copyrighted work. On March 17, 2000 (65 FR 14505), the Office published a notice which announced that public hearings relative to the rulemaking would be held in Washington, DC on May 2–4, 2000, and in Stanford, California on May 18 and 19, 2000. A schedule for all of the hearings can be found on the office's website at www.loc.gov/copyright/1201/hearing.html. The Stanford hearings were scheduled to be held from 9:30 a.m. to 6:00 p.m. The hearing on May 18, 2000, is now scheduled to begin at 2:00 p.m. rather than 9:30 a.m.

Dated: May 1, 2000.

Marilyn J. Kretsinger,

Assistant General Counsel.

[FR Doc. 00–11151 Filed 5–3–00; 8:45 am]

BILLING CODE 1410–30–P

ENVIRONMENTAL PROTECTION AGENCY

40 CFR Parts 141 and 142

[FRL–6587–8]

RIN 2040–AA97

Ground Water Rule Public Meeting

AGENCY: Environmental Protection Agency (EPA).

ACTION: Notice of public meeting.

SUMMARY: Notice is hereby given that the Environmental Protection Agency (EPA) is holding a public meeting on May 18, 2000 in the EPA auditorium in Washington, DC. The meeting will provide a description and summary of the proposed Ground Water Rule (GWR) to be published in the **Federal Register** on May 10, 2000.

EPA is inviting all interested members of the public to attend the meeting. EPA is instituting an open door policy to allow any member of the public to attend the meeting for any length of time. Approximately 150 seats will be available for the public. Seats will be available on a first-come, first served basis.

DATES: The meeting will start at 2 PM on May 18, 2000 and will adjourn at 4:00 PM.

ADDRESSES: The meeting will be held in the EPA auditorium located at 401 M Street SW, Washington, DC 20460.

For information about the meeting, contact the Office of Ground Water and Drinking Water (MC 4607), U.S. Environmental Protection Agency, 1200 Pennsylvania Ave. NW, Washington, DC 20460; telephone (202) 260–3309. The GWR proposal, GWR fact sheet, and GWR draft implementation guidance may be obtained from www.epa.gov/safewater or by calling the Safe Drinking Water Hotline, telephone (800) 426–4791.

FOR FURTHER INFORMATION CONTACT: For general information, contact the Safe Drinking Water Hotline, telephone (800) 426–4791. The Safe Drinking Water Hotline is open Monday through Friday, excluding Federal holidays, from 9 a.m. to 5:30 p.m. Eastern Time.

Dated: April 28, 2000.

Cynthia C. Dougherty,

Director, Office of Ground Water and Drinking Water.

[FR Doc. 00–11136 Filed 5–3–00; 8:45 am]

BILLING CODE 6560–50–P

DEPARTMENT OF HEALTH AND HUMAN SERVICES

Substance Abuse and Mental Health Services Administration

42 CFR Part 9

Opioid Drugs in Maintenance and Detoxification Treatment of Opiate Addiction; Conditions for the Use of Partial Agonists Treatment Medications in the Office-Based Treatment of Opiate Addiction

AGENCY: Substance Abuse and Mental Health Services Administration, HHS.

ACTION: Notice of intent to issue regulations.

SUMMARY: The Secretary, Department of Health and Human Services, is announcing its intent to develop and issue regulations to address the use of approved partial agonist treatment medications in the ''office-based'' treatment of opiate addiction.

FOR FURTHER INFORMATION CONTACT: Nicholas Reuter, Center for Substance Abuse Treatment (CSAT), SAMHSA, 5600 Fishers Lane, Rockville, MD 20857, 301–443–0457.

SUPPLEMENTARY INFORMATION:

I. Background

Section 4 of the Comprehensive Drug Abuse Prevention and Control Act of 1970 (Pub. L. 91–513) requires the Secretary of Health and Human Services (the Secretary) to determine the appropriate methods of professional practice for the medical treatment of narcotic addiction. In addition, the Narcotic Addict Treatment Act of 1974 (Pub. L. 93–281) amended the Controlled Substances Act (21 U.S.C. 823) to require that practitioners who wish to dispense narcotic drugs to individuals for the maintenance treatment or detoxification treatment of narcotic addiction must be registered annually with the Department of Justice, Drug Enforcement Administration (DEA). Registration depends, in part, upon a determination by the Secretary that the applicant is qualified, under treatment standards established by the Secretary, to provide such treatment. In addition, the applicant must comply with standards established by the Secretary (after consultation with DEA) respecting the quantities of narcotic drugs that may be provided for unsupervised use by individuals in such treatment. Finally, the applicant must comply with standards established by DEA respecting security of stocks of narcotic drugs used

for such treatment and maintenance of records on such drugs.

These statutory mandates have been reflected in treatment regulations that have been enforced by the Food and Drug Administration (FDA) since 1972. EDA has approved over 900 ''narcotic treatment programs'' under these regulations. Up until 1993, methadone was the only narcotic treatment medication approved for use under these regulations. In 1993, the regulations were revised to add regulatory standards for the use of levo-alpha-acetyl-methadol (LAAM), following review and approval of a New Drug Application (NDA) for this use by FDA.

FDA has received and is reviewing NDAs for two new narcotic treatment medications, buprenorphine and buprenorphine/naloxone (buprenorphine/nx). If approved, both products must be the subject of treatment standards.

The Secretary recognizes that partial or mixed agonist medications, are different than full agonists, such as methadone and LAAM. The Secretary has, therefore, determined that these differences warrant a different treatment standard model:

> The Secretary notes that there are new medications under development for the treatment of opioid addiction. While still under investigation and review, it is conceivable that these new medications will present safety and effectiveness profiles that differ from the existing approved treatment medications, methadone and LAAM. A new medication, for example, could rely on weak or partial agonist properties or on mixed agonist-antagonist properties, with pharmacokinetic and pharmacodynamic properties that would minimize the risk of deliberate abuse through injection and, in turn, would minimize the overall risk of diversion. As such, it may be appropriate to tailor the Federal opioid treatment standards to the specific characteristics of these future medications. (See **Federal Register,** July 22, 1999, 64 FR 39810.)

Because of their special characteristics, partial agonist medications should be the subject of specific treatment standards. Indeed, partial agonist medications' pharmacological properties and safety profiles warrant a new paradigm in narcotic addiction treatment, office-based treatment. Therefore, the Department of Health and Human Services is announcing its intent to develop and issue a proposed rule that will address the use of partial agonist treatment medications in the office-based treatment of narcotic addiction.

II. Office-Based Treatment of Narcotic Addiction

The Department is preparing a proposed rule for publication in the near future that will address the use of approved narcotic partial agonist treatment drugs controlled in Schedules III–V, in office-based settings. The proposed rule will include standards and procedures for determining the training and experience necessary to safely and effectively treat opiate addicts with partial agonist treatment medications in an office-based setting. This may include limits on the number of patients that may be treated by any one office-based physician. In addition, the proposal will include standards that relate to medical and psychosocial services, including counseling, that should be available to patients that are determined to need them. The proposed rule will include standards respecting the quantities of medications that may be prescribed, dispensed or administered to patients for unsupervised use.

In anticipation of the availability of partial agonist treatment medications, a Subcommittee on Buprenorphine was formed as part of SAMHSA's Center for Substance Abuse Treatment (CSAT) National Advisory Council. The Subcommittee considered the available research base on buprenorphine, office-based settings, and Federal oversight during two public meetings. The full CSAT National Advisory Council, after deliberation, adopted the Subcommittee's findings and recommendations which were subsequently conveyed to CSAT by the Council on June 11, 1999, in the form of a comprehensive report. The report may be obtained by notifying the CSAT contact listed above. The report is also available at the SAMHSA website (www.samhsa.gov).

SAMHSA believes that a key feature of office-based treatment will be the ability of the office-based physician to prescribe partial agonist treatment medications to patients in treatment. Without the ability to prescribe, office-based physicians would have to store and dispense medications directly to patients. These practices could be expensive and impractical for the patient and office-based physician. Current regulations enforced by the Drug Enforcement Administration (21 CFR 1306.07(a)) prohibit prescriptions for narcotics drugs used in the treatment of narcotic addiction. However, DEA is preparing a separate proposed rule to rescind this prohibition as it pertains to narcotic treatment drugs controlled in Schedules III–V.

III. References

1. Using Buprenorphine for Office-Based Treatment of Opiate Addiction, Recommendations to the Center for Substance Abuse Treatment.

Dated: December 29, 1999.

Nelba Chavez,

Administrator, Substance Abuse and Mental Health Services Administration.

Dated: March 30, 1999.

Donna E. Shalala,

Secretary, Health and Human Services.

[FR Doc. 00–10969 Filed 5–3–00; 8:45 am]

BILLING CODE 4162–20–M

FEDERAL COMMUNICATIONS COMMISSION

47 CFR Part 73

[MM Docket No. 00–44; FCC 00–93]

Extension of the Filing Requirement for Children's Television Programming Reports (FCC Form 398)

AGENCY: Federal Communications Commission.

ACTION: Proposed rule.

SUMMARY: The document proposes to amend the FCC's rules to continue indefinitely the requirement that commercial broadcast television licensees file with the Commission, on an annual basis, their quarterly Children's Television Programming Reports (FCC Form 398). The Commission's rules currently state that such reports shall be filed on an annual basis for an experimental period of three years, from January 1998 through January 2000. Continuation of the annual filing requirement will permit the Commission to continue to enforce the Children's Television Act of 1990 (''CTA''), and its rules implementing the CTA, by monitoring the amount and quality of educational television programming for children and industry compliance with the FCC's children's educational programming requirements.

DATES: Comments are due on or before June 12, 2000; reply comments are due on or before July 12, 2000.

ADDRESSES: Federal Communications Commission, 445 12th Street, SW, Room TW–A306, Washington, DC 20554.

FOR FURTHER INFORMATION CONTACT: Kim Matthews, Policy and Rules Division, Mass Media Bureau, (202) 418–2154.

SUPPLEMENTARY INFORMATION: This is a summary of the Commission's *Notice of Proposed Rulemaking* (''*NPRM*''), MM 00–44; FCC 00–93, adopted March 9, 2000; released April 6, 2000. The full

text of the Commission's *NPRM* is available for inspection and copying during normal business hours in the FCC Dockets Branch (Room TW–A306), 445 12 St. SW, Washington, DC. The complete text of this *NPRM* may also be purchased from the Commission's copy contractor, International Transcription Services (202) 857–3800, 1231 20th St., NW, Washington, DC 20036.

Synopsis of Notice of Proposed Rulemaking

I. Introduction

1. This *NPRM* proposes to amend § 73.3526(e)(11)(iii) of the Commission's rules to continue indefinitely the requirement that commercial broadcast television licensees file with the Commission, on an annual basis, their quarterly Children's Television Programming Reports (FCC Form 398). The Commission's rules currently state that such reports shall be filed on an annual basis for an experimental period of three years, from January 1998 through January 2000. Continuation of the annual filing requirement will permit the Commission to continue to enforce the Children's Television Act of 1990 (''CTA''), and its rules implementing the CTA, by monitoring the amount and quality of educational television programming for children and industry compliance with the Commission's children's educational programming requirements.

II. Background

2. The CTA requires the Commission, in its review of each television broadcast license renewal application, to ''consider the extent to which the licensee . . . has served the educational and informational needs of children through the licensee's overall programming, including programming specifically designed to serve such needs.'' In enacting the CTA, Congress found that, while television can benefit society by helping to educate and inform children, there are significant market disincentives for commercial broadcasters to air children's educational and informational programming. The objective of Congress in enacting the CTA was to increase the amount of educational and informational programming available on television. The CTA accomplished that objective by placing on every television licensee an obligation to provide such programming, including programming specifically designed to educate and inform children, and by requiring the FCC to enforce that obligation.

3. The Commission's initial rules implementing the CTA, adopted in 1991, included a very flexible definition of educational programming and did not establish quantitative guidelines regarding the amount of educational programming licensees were required to provide. In addition, these initial rules did not include measures designed to inform the public about educational programming. Within a few years after these initial rules took effect, questions began to be raised regarding the effectiveness of the new rules, and in particular about the content of the programs stations claimed were educational.

4. In August 1996, the Commission adopted its current educational programming rules to strengthen its enforcement of the CTA (61 FR 43981, August 27, 1996). The Commission's rules include several measures to improve public access to information about the availability of programming ''specifically designed'' to serve children's educational and informational needs (otherwise known as ''core'' programming). These measures include a requirement that licensees identify core programming at the time it is aired and in information provided to publishers of television program guides. Licensees are also required to designate a children's liaison at the station responsible for collecting comments on the station's compliance with the CTA. In addition, the rules also establish a definition of ''core'' programming as well as a three-hour per week processing guideline pursuant to which broadcasters airing at least three hours per week of programming that meets the definition of ''core'' will receive staff-level approval of their license renewal applications.

5. One of the most important public information measures adopted by the Commission in 1996 is the requirement that licensees complete a Children's Television Programming Report (FCC Form 398) each calendar quarter. Among other things, these Reports identify the educational and informational programs aired by the licensee over the previous quarter and the days and times these programs were regularly scheduled, the age of the target child audience for each program, and the average number of hours per week of core programming broadcast over the past quarter. Licensees must include in the Reports an explanation of how each core program meets the definition of ''core'' programming adopted by the Commission. Stations must also identify in their Reports the core programs the station plans to air during the next calendar quarter.

6. The Reports are prepared on a quarterly basis and must be placed in the station's public inspection file. Stations are required to publicize the existence and location of the reports. In addition, as noted above, the rules currently provide that, ''for an experimental period of three years'' these Reports must be filed with the Commission on an annual basis (four quarterly reports filed jointly once a year) on the following dates: January 10, 1998, January 10, 1999, and January 10, 2000. The Reports must be filed with the Commission electronically, and the Commission posts the Reports on the FCC's Internet home page where they can be readily accessed by the public. The address for the Commission's home page is: http://www.fcc.gov. The Commission also encourages broadcasters to make these Reports available on their own websites.

III. Discussion

7. The public information initiatives adopted in 1996 are an integral part of the children's programming rules. These measures are designed to ensure that the public, and especially parents, has access to information regarding the educational programming being aired by broadcasters so that parents and others can help achieve the goal of the CTA to increase the amount of educational programming available on television. In adopting the public information initiatives as part of its revised educational programming rules, the Commission explained their purpose as follows:

8. We conclude that the market inadequacies that led Congress to pass the Children's Television Act can be addressed, in part, by enhancing parents' knowledge of children's educational programming. One way to encourage licensees to provide such programming is to encourage and enable the public, especially parents, to interact with broadcasters. Easy public access to information permits the Commission to rely more on marketplace forces to achieve the goals of the CTA and facilitates enforcement of the statute by allowing parents, educators, and others to actively monitor a station's performance. As CBS ''wholeheartedly'' agrees, ''judgments of the quality of a licensee's programming, educational or otherwise, are best made by the audience, not the federal government.'' Thus, our rules should facilitate easy access to information regarding children's educational programming in the community.

9. Facilitating public access to the information contained in the Children's Television Programming Reports helps

the marketplace to achieve the goals of the CTA in a number of ways. Parents who have access to information about educational programming, such as the titles of the programs, the times they are regularly scheduled to air, and the age for which the programs are intended, can select such programming for their children to watch, thereby increasing the audience for such programs and the incentive of broadcasters to air, and producers to supply, more such programs. Better information also helps parents in working with broadcasters in their local communities to improve children's educational programming without government intervention. The information contained in the Reports can be used by parents, educators, and others interested in educational programming to monitor a station's performance in complying with the CTA and the Commission's rules. The Commission encourages parents and others to communicate directly with stations and program producers regarding the shows stations claim meet the FCC's definition of ''core'' programming. In this way, the public can play an active role in helping to enforce children's programming requirements. Finally, requiring broadcasters to identify programming they rely upon to meet their obligation to air educational programming makes broadcasters more accountable to the public. Improving broadcaster accountability minimizes the need for government involvement to enforce the CTA and helps to ensure that broadcasters, with input from the public, rather than the Commission determine which television programs serve children's educational needs.

10. The requirement that broadcasters file their Children's Television Programming Reports with the Commission was initially adopted, on an experimental basis, for a period of three years. To date, Reports have been filed for two successive years, January 10, 1998 and January 10, 1999. Under the current rules, the filing requirement expires after Reports for 1999 are filed January 10, 2000. We believe that the requirement that broadcasters file these Reports with the FCC should be continued. Therefore, we propose to retain the filing requirement indefinitely, and request comment on this proposal.

11. Anecdotal evidence suggests that organizations devoted to informing parents and community members about children's programming use the reports as a primary data source. For example, the Center for Research on the Influences of Television on Children at the University of Texas reviews local broadcasters' reports as part of an annual evaluation of children's programming in the Austin, Texas market. The Center for Media Education uses the reports to develop tools for parents. Other organizations, including the National Institute on Media and the Family and the Annenberg Public Policy Center at the University of Pennsylvania, use the reports to track national trends in children's television programming. The filing requirement is an important part of the emphasis placed by the rules on improving the flow of information to the public about educational programming. Filing permits the Commission to place the Reports on its website, making this information easily accessible in one central location. Members of the public can view Reports from a number of stations easily, and compare results, without having to contact each station individually. Continuation of the filing requirement is also important to ensure that the Commission itself has access to information regarding licensee compliance with the children's programming rules. Without the annual filing requirement, licensees would be required to report on their station's children's programming only once every eight years, at the end of the license term. Extension of the license term to eight years necessarily places a heavier emphasis on facilitating public monitoring of licensee compliance with the rules, to assist the FCC in its enforcement role. Among other things, the Commission has relied upon information in the Reports to evaluate industry practices in connection with preemption of children's programming. A review of the Children's Television Programming Reports filed with the Commission for 1998 indicates that, of the 4,964 quarterly reports filed, 63 reported less than 3 hours of core children's educational and informational programming, 2,116 reported exactly 3 hours of core programming, and 1,832 reported 4 or more hours of core programming. In adopting the children's programming rules, the Commission stated it would monitor the broadcast industry's children's educational programming performance for three years based upon the Children's Television Programming Reports filed with the Commission, and would review the reports at the end of the three-year period and take appropriate action as necessary to ensure that stations are complying with the rules and guidelines. The Commission will commence that review after January 10, 2000, the filing due date for the last Children's Television Programming Reports of the three-year period.

12. We also request comment on whether our rules should be revised to require that Reports be filed quarterly, at the time they are prepared, rather than once a year. As broadcasters must prepare the Reports quarterly, requiring Reports to be filed on a quarterly basis is unlikely to impose a significant additional burden on licensees, especially now that Reports are required to be filed electronically and transmission to the Commission should require only a few additional keystrokes. Finally, we ask commenters to address whether any changes should be made to FCC Form 398 to make the Reports more informative or easier to prepare. For example, are there revisions to Form 398 that would make it easier for the reader to determine the number of times core programs are preempted and to obtain information about the rescheduling of any preempted episodes?

IV. Administrative Matters

13. *Comments and Reply Comments.* Pursuant to 47 CFR 1.415 and 1.419 of the Commission's rules, interested parties may file comments on or before June 12, 2000 and reply comments on or before July 12, 2000. Comments may be filed using the Commission's Electronic Filing System (ECFS) or by filing paper copies. See Electronic Filing of Documents in Rulemaking Proceedings (63 FR 24121, May 1, 1998).

14. Comments filed through the ECFS can be sent as an electronic file via the Internet to <http://www.fcc.gov/e-file/ecfs.html>. Generally, only one copy of an electronic submission must be filed. If multiple docket or rulemaking numbers appear in the caption of this proceeding, however, commenters must transmit one electronic copy of the comments to each docket or rulemaking number referenced in the caption. In completing the transmittal screen, commenters should include their full name, postal service mailing address, and the applicable docket or rulemaking number. Parties may also submit an electronic comment by Internet e-mail. To get filing instructions for e-mail comments, commenters should send an e-mail to ecfs@fcc.gov, and should include the following words in the body of the message, ''get form, <your e-mail address.'' A sample form and directions will be sent in reply.

15. Parties who choose to file by paper must file an original and four copies of each filing. If more than one docket or rulemaking number appear in the caption of this proceeding, commenters must submit two additional

copies for each additional docket or rulemaking number. All filings must be sent to the Commission's Secretary, Magalie Roman Salas, Office of the Secretary, Federal Communications Commission, 445 Twelfth Street, SW; TW–A325, Washington, DC 20554.

16. Parties who choose to file by paper should also submit their comments on diskette. These diskettes should be submitted to: Kim Matthews, 445 Twelfth Street, SW; 2–C225, Washington, DC 20554. Such a submission should be on a 3.5 inch diskette formatted in an IBM compatible format using WordPerfect 5.1 for Windows or compatible software. The diskette should be accompanied by a cover letter and should be submitted in ''read only'' mode. The diskette should be clearly labeled with the commenter's name, proceeding (including the docket number (MM Docket No. 00–44), type of pleading (comment or reply comment), date of submission, and the name of the electronic file on the diskette. The label should also include the following phrase ''Disk Copy—Not an Original.'' Each diskette should contain only one party's pleadings, preferably in a single electronic file. In addition, commenters must send diskette copies to the Commission's copy contractor, International Transcription Service, Inc., 445 Twelfth Street, SW; CY–B402, Washington, DC 20554.

17. *Ex Parte Rules.* This is a permit-but-disclose notice and comment rulemaking proceeding. Ex parte presentations are permitted except during the Sunshine Agenda period, provided they are disclosed as provided in the Commission's Rules. See generally 47 CFR 1.1202, 1.1203, and 1.1206(a).

18. *Initial Regulatory Flexibility Analysis.* With respect to this Notice, and Initial Regulatory Flexibility Analysis (''IRFA'') is contained in Appendix A. As required by Section 603 of the Regulatory Flexibility Act, the Commission has prepared an IRFA of the expected impact on small entities of the proposals contained in this Notice. Written public comments are requested on the IRFA. In order to fulfill the mandate of the Contract With America Advancement Act of 1996 regarding the Final Regulatory Flexibility Analysis, we ask a number of questions in our IRFA regarding the prevalence of small business in the television broadcasting industry. Comments on the IRFA must be filed in accordance with the same filing deadlines as comments on the Notice, but they must have a distinct heading designating them as responses to the IRFA. The Secretary shall send a copy of this Notice, including the IRFA, to the Chief Counsel for Advocacy of the Small Business Administration in accordance with Section 603(a) of the Regulatory Flexibility Act, Public Law No. 96–354, 94 Stat. 1164, 5 U.S.C. 601 et seq. (1981), as amended.

19. *Authority.* This Notice is issued pursuant to authority contained in Sections 4(i), 303, and 307 of the Communications Act of 1934, as amended, 47 U.S.C. 154(i), 303, and 307.

VII. Initial Regulatory Flexibility Analysis

20. *Initial Paperwork Reduction Act of 1995 Analysis.* This *NPRM* proposes to continue indefinitely the requirement that broadcast television licensees file with the Commission their Children's Television Programming Reports on FCC Form 398. In addition, the *NPRM* invites comment on whether these filings should be required on a quarterly, rather than an annual, basis, and on whether revisions should be made to Form 398 to reduce the burden on licensees. As part of our continuing effort to reduce paperwork burdens, we invite the general public and the Office of Management and Budget (OMB) to take this opportunity to comment on the information collections contained in this *NPRM,* as required by the Paperwork Reduction Act of 1995, Public Law No. 104–13. Public and agency comments are due at the same time as other comments on this Notice; OMB comments are due 60 days from the date of publication of this Notice in the **Federal Register**. Comments should address: (a) whether the proposed collection of information is necessary for the proper performance of the functions of the Commission, including whether the information shall have practical utility; (b) the accuracy of the Commission's burden estimates; (c) ways to enhance the quality, utility, and clarity of the information collected; and (d) ways to minimize the burden of the collection of information on the respondents, including the use of automated collection techniques or other forms of information technology. In addition to filing comments with the Secretary, a copy of any comments on the information collections contained herein should be submitted to Judy Boley, Federal Communications Commission, 445 Twelfth Street, SW; 1–C8004, Washington, DC 20554, or via the Internet to jboley@fcc.gov and to Timothy Fain, OMB Desk Officer, 10236 NEOB, 725 17th Street, NW, Washington, DC 20503 or via the Internet to fain_t@al.eop.gov.

21. *Initial Regulatory Flexibility Act Analysis.* As required by the Regulatory Flexibility Act, 5 U.S.C. 603 (''RFA''), the Commission has prepared an Initial Regulatory Flexibility Analysis (''IRFA'') of the expected impact on small entities of the proposals contained in this *NPRM.* Written public comments are requested with respect to the IRFA. These comments must be filed in accordance with the same filing deadlines for comments on the rest of the *NPRM,* but they must have a separate and distinct heading, designating the comments as responses to the IRFA. The Commission shall send a copy of this *NPRM,* including the IRFA, to the Chief Counsel for Advocacy of the Small Business Administration in accordance with the RFA, 5 U.S.C. 603(a).

22. *Reasons Why Agency Action is Being Considered.* Our goals in commencing this proceeding and in formulating the proposals in the *NPRM* are to ensure that the FCC and the public have adequate information regarding educational programming for children and licensee compliance with the CTA and the FCC's rules.

23. *Need For and Objectives of the Proposed Rule Changes.* Our goal in commencing this proceeding and in formulating the proposals in the *NPRM* is to ensure that the public continues to have access to information regarding the educational programming being aired by television broadcast licensees to assist parents in selecting educational programming for their children and to assist the public in monitoring the performance of stations in complying with the CTA and the FCC's rules. Our goal is also to ensure that the FCC receives adequate information to enforce the CTA and its rules, and to permit it to provide a central location for access to Children's Television Reports on the FCC's Internet website.

24. *Legal Basis.* Authority for the actions proposed in the *NPRM* may be found in Sections 4(i) and 303 and 307 of the Communications Act of 1934, as amended, 47 U.S.C. 154(i), 303, and 307.

25. Recording, Recordkeeping, and Other Compliance Requirements. The *NPRM* proposes to continue indefinitely existing filing requirements, and invites comments on whether licensees should be required to file Children's Television Programming Reports on a quarterly rather than an annual basis.

26. Federal Rules that Overlap, Duplicate, or Conflict with the Proposed Rules. The rules proposed in this proceeding do not overlap, duplicate, or conflict with any other rules.

27. Description and Estimate of the Number of Small Entities to Which the Rules Would Apply. Under the RFA,

small entities may include small organizations, small businesses, and small governmental jurisdictions. 5 U.S.C. 601(6). The RFA, 5 U.S.C. 601(3), generally defines the term ''small business'' as having the same meaning as the term ''small business concern'' under the Small Business Act, 15 U.S.C. 632. A small business concern is one which: (1) is independently owned and operated; (2) is not dominant in its field of operation; and (3) satisfies any additional criteria established by the Small Business Administration (''SBA''). Pursuant to 5 U.S.C. 601(3), the statutory definition of a small business applies ''unless an agency after consultation with the Office of Advocacy of the SBA and after opportunity for public comment, establishes one or more definitions of such term which are appropriate to the activities of the agency and publishes such definition(s) in the **Federal Register**. There are approximately 1,240 existing commercial television broadcasters of all sizes that may be affected by the proposals contained in this *NRPM.*

28. Any Significant Alternatives Minimizing the Impact on Small Entities and Consistent with the Stated Objectives: This *NPRM* solicits comment on a number of proposals, including continuation of the existing requirement to file Children's Television Programming Reports with the Commission. We seek comment in the *NPRM* on this proposal as well as on other issues, and on whether there is a significant economic impact on any class of small licensees as a result of any of our proposals. Any significant alternatives presented in the comments will be considered.

List of Subjects in 47 CFR Part 73

Television broadcasting.

Federal Communications Commission.

Magalie Roman Salas,

Secretary.

[FR Doc. 00–11098 Filed 5–3–00; 8:45 am]

BILLING CODE 6712–01–P

ENVIRONMENTAL PROTECTION AGENCY

48 CFR Parts 1503 and 1552

[FRL–6588–2]

Acquisition Regulation

AGENCY: Environmental Protection Agency.

ACTION: Proposed rule.

SUMMARY: The Environmental Protection Agency (EPA) is issuing this rule to amend the EPA Acquisition Regulation (EPAAR) to add a contract clause to Agency contracts whereby contractors, under contracts exceeding $1,000,000, are required to display EPA Office of the Inspector General Hotline posters within contractor work areas.

DATES: Comments should be submitted not later than July 3, 2000.

ADDRESSES: Comments must be submitted to Larry Wyborski, U.S. Environmental Protection Agency, Office of Acquisition Management (3802R), 1200 Pennsylvania Avenue NW, Washington, DC 20460.

FOR FURTHER INFORMATION CONTACT: Larry Wyborski, U.S. Environmental Protection Agency, Office of Acquisition Management (3802R), 1200 Pennsylvania Avenue NW, Washington, DC 20460; (202) 564–4369, wyborski.larry@epamail.epa.gov.

SUPPLEMENTARY INFORMATION:

A. Background Information

EPA's Office of Inspector General (OIG) requested that contractor personnel under EPA contracts have access to information for contacting the OIG in the event they wish to report waste, fraud or abuse under an EPA contract. The information will be available in an EPA OIG Hotline Poster. A contract clause will notify the contractor of the requirement to display the hotline posters and will provide a reference for obtaining the posters.

B. Executive Order 12866

This is not a significant regulatory action for purposes of Executive Order 12866; therefore, no review is required at the Office of Information and Regulatory Affairs, within the Office of Management and Budget (OMB).

C. Paperwork Reduction Act

The Paperwork Reduction Act does not apply because this rule does not contain information collection requirements for the approval of OMB under the Paperwork Reduction Act of 1980 (44 U.S.C. 3501, et seq).

D. Regulatory Flexibility Act (RFA), as Amended by the Small Business Regulatory Enforcement Fairness Act of 1996 (SBREFA), 5 U.S.C. 601 et seq.

The RFA generally requires an agency to prepare a regulatory flexibility analysis of any rule subject to notice and comment rulemaking requirements under the Administrative Procedure Act or any other statute, unless the agency certifies that the rule will not have a significant impact on a substantial number of small entities. Small entities include small businesses, small organizations, and small governmental jurisdictions.

For purposes of assessing the impact of this rule on small entities, small entity is defined as: (1) A small business that meets the definition of a small business found in the Small Business Act and codified at 13 CFR 121.201; (2) a small governmental jurisdiction that is a government of a city, county, town, school district or special district with a population of less than 50,000; and (3) a small organization that is any not-for-profit enterprise which is independently owned and operated and is not dominant in its field.

After considering the economic impacts of this proposed rule on small entities, I certify that this action will not have a significant economic impact on a substantial number of small entities. In determining whether a rule has a significant economic impact on a substantial number of small entities, the impact of concern is any *adverse* economic impact on small entities, since the primary purpose of the regulatory flexibility analyses is to identify and address regulatory alternatives ''which minimize any significant economic impact of the proposed rule on small entities.'' 5 U.S.C. Sections 603 and 604. Thus, an agency may certify that a rule will not have a significant economic impact on a substantial number of small entities if the rule relieves regulatory burden, or otherwise has a positive economic effect on all of the small entities subject to the rule. This direct final rule does not have a significant impact on a substantial number of small entities. The requirements under the rule impose no reporting, record-keeping, or compliance costs on small entities.

E. Unfunded Mandates Reform Act

Title II of the Unfunded Mandates Reform Act of 1995 (UMRA) Public Law 104–4, establishes requirements for Federal agencies to assess their regulatory actions on State, local and Tribal governments and the private sector. This rule does not contain a Federal mandate that may result in expenditures of $100 million or more for State, local, and Tribal governments, in the aggregate, or the private sector in any one year. Any private sector costs for this action relate to paperwork requirements and associated expenditures, which would be far below the level established for UMRA applicability. Thus, the rule is not subject to the requirements of sections 202 and 205 of the UMRA.

F. Executive Order 13045

Executive Order 13045, Protection of Children from Environmental Health Risks and Safety Risks (6 FR 19885, April 23, 1997), applies to any rule that: (1) Is determined to be economically significant as defined under Executive Order 12866; and (2) concerns an environmental health or safety risk that EPA has reason to believe may have disproportionate effect on children. If the regulatory action meets both criteria, the Agency must evaluate the environmental health or safety effects of the planned rule on children, and explain why the planned regulation is preferable to other potentially effective and reasonably feasible alternatives considered by the Agency.

This rule is not subject to Executive Order 13045 because it is not a significant rule as defined by E.O. 12866, and because it does not involve decisions on environmental health or safety risks.

G. Executive Order 13084

Under Executive Order 13084, EPA may not issue a regulation that is not required by statute, that significantly or uniquely affects the communities of Indian Tribal governments, and that imposes substantial direct compliance costs on those communities, unless the Federal government provides the funds necessary to pay for the direct compliance costs incurred by the Tribal governments, or EPA consults with those governments. If EPA complies by consulting, E.O. 13084 requires EPA to provide to OMB, in a separately identified section of the preamble to the rule, a description of the extent of EPA's prior consultation with representatives of affected Tribal governments, a summary of the nature of their concerns, and a statement supporting the need to issue the regulation.

In addition, Executive Order 13084 requires EPA to develop an effective process permitting elected and other representatives of Indian tribal governments ''to provide meaningful and timely input in the development of regulatory policies on matters that significantly or uniquely affect their communities.''

This rule does not significantly or uniquely affect the communities of Indian Tribal governments. Accordingly, the requirements of section 3(b) of Executive Order 13084 do not apply to this rule.

H. National Technology Transfer and Advancement Act of 1995

Section 12(d) of the National Technology Transfer and Advancement Act of 1995 (NTTAA), Public Law 104–113, section 12(d) (15 U.S.C. 272 note) directs EPA to use voluntary consensus standards in its regulatory activities unless to do so would be inconsistent with applicable law or otherwise impractical. Voluntary consensus standards are technical standards (e.g., materials specifications, test methods, sampling procedures and business practices) that are developed or adopted by voluntary consensus standards bodies. The NTTAA directs EPA to provide Congress, through OMB, explanations when the Agency decides not to use available and applicable voluntary consensus standards.

This rule does not involve technical standards. Therefore, EPA did not consider the use of any voluntary consensus standards.

I. Executive Order 13132

Executive Order 13132, entitled ''Federalism'' (64 FR 43255, August 10, 1999), requires EPA to develop an accountable process to ensure ''meaningful and timely input by State and local officials in the development of regulatory policies that have federalism implications.'' ''Policies that have federalism implications'' are defined in the Executive Order to include regulations that have ''substantial direct effects on the States, on the relationship between the national government and the States, or on the distribution of power and responsibilities among the various levels of government.''

Under Section 6 of Executive Order 13132, EPA may not issue a regulation that has federalism implications, that imposes substantial direct compliance costs, and that is not required by statute, unless the Federal government provides the funds necessary to pay the direct compliance costs incurred by State and local governments, or EPA consults with State and local officials early in the process of developing the proposed regulation. EPA also may not issue a regulation that has federalism implications and that preempts State law, unless the Agency consults with State and local officials early in the process of developing the proposed regulation.

This proposed rule does not have federalism implications. It will not have substantial direct effect on the States, on the relationship between the national government and the States, or on the distribution of power and responsibilities among the various levels of government, as specified in Executive Order 13132. The rule amends the EPA Acquisition Regulation to add a contract clause to agency contracts whereby contractors, under contracts exceeding $1,000,000, are required to display EPA Office of the Inspector General Hotline posters within contractor work areas. Thus, the requirements of Section 6 of the Executive Order do not apply to this rule.

Authority: The provisions of this regulation are issued under 5 U.S.C. 301; section 205(c), 63 Stat. 390, as amended 40 U.S.C. 486(c).

List of Subjects in 48 CFR Parts 1503 and 1552

Government procurement.

Therefore, 48 CFR Chapter 15 is amended as set forth below:

1. The authority citation for parts 1503 and 1552 continues to read as follows:

Authority: Sec. 205(c), 63 Stat. 390 as amended, 40 U.S.C. 486(c).

PART 1503—[AMENDED]

2. Subpart 1503.5, Other Imports Business Practices, is added as follows:

Subpart 1503.5—Other Improper Business Practices

1503.500–70 Display of EPA Office of Inspector General Hotline Poster.

The contracting officer shall insert the clause at 1552.203–71, Display of EPA Office of Inspector General Hotline Poster, in all contracts exceeding a value of $1,000,000 including all contract options.

PART 1552—[AMENDED]

3. 1552.203–71 is added to read as follows:

1552.203–71 Display of EPA Office of Inspector General Hotline Poster.

As prescribed in 1503.500–70 insert the following clause in all contracts valued in excess of $1,000,000 including all contract options.

Display of EPA Office of Inspector General Hotline Poster

(JUN 2000)

(a) For EPA contracts exceeding a value of $1,000,000 including all contract options, the contractor shall prominently display EPA Office of Inspector General Hotline posters in contractor facilities where the work is performed under the contract.

(b) Office of Inspector General hotline posters may be obtained from the EPA Office of Inspector General, ATTN: OIG Hotline (2443), 401 M Street, SW, Washington, DC 20460, or by calling (202) 260–5113.

Dated: April 18, 2000.

Betty L. Bailey,

Director, Office of Acquisition Management.

[FR Doc. 00–11137 Filed 5–3–00; 8:45 am]

BILLING CODE 6560–50–P

Notices

Federal Register

Vol. 65, No. 87

Thursday, May 4, 2000

This section of the FEDERAL REGISTER contains documents other than rules or proposed rules that are applicable to the public. Notices of hearings and investigations, committee meetings, agency decisions and rulings, delegations of authority, filing of petitions and applications and agency statements of organization and functions are examples of documents appearing in this section.

DEPARTMENT OF AGRICULTURE

Submission for OMB Review; Comment Request

April 28, 2000.

The Department of Agriculture has submitted the following information collection requirement(s) to OMB for review and clearance under the Paperwork Reduction Act of 1995, Public Law 104–13. Comments regarding (a) whether the collection of information is necessary for the proper performance of the functions of the agency, including whether the information will have practical utility; (b) the accuracy of the agency's estimate of burden including the validity of the methodology and assumptions used; (c) ways to enhance the quality, utility and clarity of the information to be collected; (d) ways to minimize the burden of the collection of information on those who are to respond, including through the use of appropriate automated, electronic, mechanical, or other technological collection techniques or other forms of information technology should be addressed to: Desk Officer for Agriculture, Office of Information and Regulatory Affairs, Office of Management and Budget (OMB), Washington, DC 20503 *and* to Departmental Clearance Office, USDA, OCIO, Mail Stop 7602, Washington, DC 20250–7602. Comments regarding these information collections are best assured of having their full effect if received within 30 days of this notification. Copies of the submission(s) may be obtained by calling (202) 720–6746.

An agency may not conduct or sponsor a collection of information unless the collection of information displays a currently valid OMB control number and the agency informs potential persons who are to respond to the collection of information that such persons are not required to respond to the collection of information unless it displays a currently valid OMB control number.

Farm Service Agency

Title: Request for Direct Loan Assistance.

OMB Control Number: 0560–0167.

Summary of Collection: Section 302 (7 U.S.C. 1922) of the Consolidated Farm and Rural Development Act (CONACT) provides that ''the Secretary is authorized to make and insure loans under this title to farmers and ranchers''. The Farm Service Agency (FSA) has issued regulations through the Federal Register process to implement the making and servicing of direct loans in chapter 18 of the Code of Federal Regulations. These regulations establish the information collection necessary for FSA to make and service direct loans. The loans include Operating, Farm Ownership, Soil and Water, Softwood Timber Production, Emergency, Economic Emergency, Economic Opportunity, Recreation, and Rural Housing loans for farm service building. FSA will collect information using from FSA 410–1.

Need and Use of the Information: FSA will collect information to determine if the applicant/borrower meets the eligibility requirements established in the CONACT. FSA will also collect the following information: name, address, telephone number; social security number; type of farming operation; information relating to the applicant's credit history; the source and amount of nonfarm income; and a financial statement. If the information were not collected FAS would not be able to make an accurate eligibility and financial feasibility determination on respondents' request for new loans and loan servicing actions.

Description of Respondents: Farm; Federal Government; Business or other-for-profit; Individuals or households.

Number of Respondents: 49,670.

Frequency of Responses: Reporting: Other (when applying for benefits).

Total Burden Hours: 99,340.

Forest Service

Title: Agreement to Initiate (ATI) and Exchange Agreement (EA).

OMB Control Number: 0596–0105.

Summary of Collection: Land exchanges are an important tool to consolidate landownership for purposes of more efficient management; to secure important Forest Plan objectives of resource management, enhancement, development, and protection; and to fulfill other public needs such as acquiring lands important for such resources as fisheries habitat, wild and scenic rivers, wildlife habitat, and wilderness. A land exchange is where the United States has identified either federal land or federal interest in land available for exchange and a non-Federal party has identified either private land or private interest in land they are interested in exchanging. The United States and the non-Federal party agree to do an exchange of what they own. The primary authorities used to perform land exchanges involving National Forest Systems lands include the General Exchange Act, the Weeks, Act, the Federal Land Policy and Management Act and the Federal Land Exchange Facilitation Act. The Forest Service (FS) will collect information by phone, in face to face meetings with land exchange parties, or by requesting in a letter to the exchange party that the requested information be submitted by mail.

Need and Use of the Information: FS will collect information on the description of properties being considered in land exchange; an implementation schedule of action items relating to preparation and review of an appraisal of the land; public scoping and notification; preparation of specialist reports, etc., and the identification of the party responsible for each action item, as well as target dates for completion of each action item. FS will also collect information such as the identification of the non-Federal land exchange parties; the description of the lands and interests to exchanged, such as roads; the identification of all reserved and outstanding interests, such as roads, minerals, and easements; and all other terms and conditions necessary to complete exchange. To not collect the information would mean the land exchange was dropped.

Description of Respondents: Business or other for-profit; Individuals or households; State, Local or Tribal Government.

Number of Respondents: 100.

Frequency of Responses: Reporting: On occasion.

Total Burden Hours: 200.

Farm Service Agency

Title: Fax Signature Card.

OMB Control Number: 0560–NEW.

Summary of Collection: U.S. Department of Agriculture (USDA), Farm Service Agency (FSA) is seeking alternative service delivery process that will reduce the necessity for USDA service center customers to travel to a service center to provide information and sign documents. One of the alternatives being implemented is to accept information provided via telefacsimile. Each of the USDA service center agencies (Farm Service Agency, Natural Resources Conservation Service, and Rural Development Agencies) will share the signature on the FAX signature card to eliminate redundant collection of the same data. FSA will collect information using form FSA–237 FAX signature card.

Need and use of the Information: FSA will collect the name and signature from service center customers. The information collected will be used to verify the authenticity of signatures on documents provided to USDA service centers via telefacsimile. Failure to collect and maintain the original signature will limit USDA's ability to offer the telefacsimile alternative to its service center customers.

Description of Respondents: Farms; Individuals or households.

Number of Respondents: 866,089.

Frequency of Responses: Reporting: Other (once).

Total Burden Hours: 14,429.

Agency is requesting emergency approval by May 5, 2000.

Animal and Plant Health Inspection Service

Title: Animal Welfare Act, Part 3, SubParts A and D, Dogs, Cats, Primates.

OMB Control Number: 0579–0093.

Summary of Collection: The Laboratory Animal Welfare Act (AWA) (Public Law 890544) enacted August 24, 1966, required the U.S. Department of Agriculture, (USDA), to regulate the humane care and handling of dog, and nonhuman primates. The legislation was the result of extensive demand by organized animal welfare groups and private citizens requesting a Federal law covering the transportation, care, and handling of laboratory animals. The Animal and Plant Health Inspection Service (APHIS), Animal Care (AC) has the responsibility to enforce the Animal Welfare Act (7 U.S.C. 2131–2156) and the provisions of 9 CFR, Subchapter A, which implements the Animal Welfare Act.

Need and use of the Information: APHIS will collect to insure that animal use in research facilities or exhibition purposes are provided humane care and treatment. The information is used to ensure those dealers, exhibitors, research facilities, carriers, etc., are in compliance with the Animal Welfare Act and regulations and standards promulgated under this authority of the Act.

Description of Respondents: Business or other for-profit; Not for-profit institutions; State, Local and Tribal Government.

Number of Respondents: 82,000.

Frequency of Responses: Recordkeeping; Reporting: On occasion.

Total Burden Hours: 44,313.

Food and Nutrition Service

Title: Civil Rights Title VI—Collection Reports—FNS–191 and FNS–101.

OMB Control Number: 0584–0025.

Summary of Collection: Title VI of the Civil Rights Act of 1964 requires the collection of racial/ethnic data for all programs utilizing Federal Funds. Title 28 of the Code of Federal Regulations (CFR), Section 42.107(b), require all Federal Departments to have racial and ethnic information available showing the extent to which minority groups are beneficiaries of the federally assisted programs they administer. In order to comply with the Civil Rights Act, Department of Justice regulations and the Department's nondiscrimination policy and regulations (7 CFR Part 15), the Department's Food and Nutrition Service (FNS) requires State agencies to submit data on the racial/ethnic categories of person receiving benefits from FNS food assistance programs. FNS will collect information using forms FNS 191 and FNS 101.

Need and Use of the Information: FNS will collect the names, address, telephone number, and number of clinics to compile a local agency directory which serves as the primary source of data on number and location for local agencies and number of clinics operating Commodity Supplemental Food Program (CSFP). FNS will also collect information on the number of CFSP individuals (women, infant, children, and elderly) in each racial/ethnic category for one month of the year. The information will be used in the Department's annual USDA Equal Opportunity Report. If the information is not collected FNS could not track racial/ethnic data for program evaluation.

Description of Respondents: State, Local or Tribal Government.

Number of Respondents: 2,939.

Frequency of Responses: Recordkeeping; Reporting: Annually.

Total Burden Hours: 6,595.

Rural Business-Cooperative Service

Title: Rural Economic Development Loan and Grant Program.

OMB Control Number: 0570–0012.

Summary of Collection: Section 313 of the Rural Electrification Act of 1936 (7 U.S.C. 940(c)) established a loan and grant program. The program provides zero interest loans and grants to Rural Utilities Service (RUS) borrowers for the purpose of promoting rural economic development and job creation projects. The loans and grants under this program may be provided to approximately 1,700 electric and telephone utilities across the country that has borrowed funds from RUS. Under this program, the RUS borrowers may receive the loan funds and pass them on to businesses or other organizations. Rural Business-Cooperative Service (RBS) will collect information using form RD 1703–1.

Need and Use of the Information: RBS will collect information to evaluate applications for funding consideration, conduct an environmental review, prepare legal documents, receive loan payments, oversee the operation of a revolving loan fund, monitor the use of RBS funds, enforce other government requirements such as compliance with civil rights regulations. If the information were not collected RBS would be unable to select the projects that will receive loan or grant funds.

Description of Respondents: Business or other for-profit.

Number of Respondents: 180.

Frequency of Responses: Recordkeeping; Reporting: On occasion; Annually.

Total Burden Hours: 7,742.

Rural Housing Service

Title: Farm Labor Housing Technical Assistance Grants.

OMB Control Number: 0575–NEW.

Summary of Collection: Section 514 of Title V of the Housing Act of 1949 authorizes USDA to make loans for the construction of farm labor housing. Section 516 of the Act authorizes USDA to make grants for the same purpose. USDA is authorized to provide ''financial assistance to private and public nonprofit agencies to encourage the development of domestic and migrant farm labor housing''. Up to 10 percent of the annual section 516 appropriation may be used for ''technical assistance'' purposes ($1,350,000 in FY 2000). Recipients of this assistance, in turn, assist other organizations obtain loans and grants for the construction of farm labor housing. The Rural Housing Service will collect information using the Technical Assistance Grant Agreement.

Need and Use of the Information: RHS will collect information to determine applicant eligibility for a grant, project feasibility, to select grant

proposals for funding, and to monitor performance after grants have been awarded. Failure to collect this information could result in the improper use of Federal funds.

Description of Respondents: Not-for-profit institutions; State, Local, or Tribal Government.

Number of Respondents: 12.

Frequency of Responses: Recordkeeping; Reporting: Quarterly; Annually.

Total Burden Hours: 7,878.

Agency is requesting emergency approval by May 12, 2000.

Rural Housing Service

Title: 7 CFR 1944–E, Rural Rental and Cooperative Housing Loan Policies, Procedures, and Authorizations.

OMB Control Number: 0575–0047.

Summary of Collection: The Rural Housing Agency (RHS), an agency of the U.S. Department of Agriculture is authorized to make loans to finance rural rental and cooperative housing projects and related facilities under Section 515 and 521 of Title V of the Housing Act of 1949, as amended. The intent of the program is to provide affordable rental housing for elderly or handicapped person or families, or other persons and families of low or moderate income in rural areas. RHS will collect information using forms RD 1944–7, 30, 31, 33, 34, 35, and 38.

Need and Use of the Information: RHS will collect information to evaluate the cost, benefits, feasibility and financial performance of the proposed project, as well as the eligibility of the applicant. Failure to collect this information would result in unauthorized federal assistance being granted.

Description of Respondents: Business or other for-profit; Individuals or households; Not-for-profit institutions; State, Local, or Tribal Government.

Number of Respondents: 425.

Frequency of Responses: Reporting: On occasion.

Total Burden Hours: 28,246.

William McAndrew,

Departmental Clearance Officer.

[FR Doc. 00–11077 Filed 5–3–00; 8:45 am]

BILLING CODE 3410–01–M

DEPARTMENT OF AGRICULTURE

Forest Service

Fanshaw Project Environmental Impact Statement; Notice of Intent

AGENCY: Forest Service, USDA.

ACTION: Revision of Notice of Intent (NOI).

SUMMARY: This document revises the Notice of Intent to prepare and Environmental Impact Statement (EIS) for the Port Houghton/Cape Fanshaw timber harvest as originally published in the **Federal Register** on September 12, 1994 (**Federal Register** Vol. 59, No. 175, pp. 46819–46820). A revised NOI was published on August 14, 1995 (**Federal Register** Vol. 60, No. 156, p. 41862) stating that two decisions-makers will sign the Record of Decision. A NOI to prepare a Revised Draft EIS was published on September 23, 1997 (**Federal Register** Vol. 62, No. 184, pp. 49665–49666). This revision to the NOI is necessary because a new Record of Decision (ROD) for the Tongass Land and Resource Management Plan was signed by Under-Secretary of Agriculture Jim Lyons in April 1999, which changed some of the existing Forest Plan Land Use Designations (LUD) within the project area. Most of the Forest Plan LUDs within the Port Houghton/Cape Fanshaw EIS were changed to Non-Development LUDs. This NOI revision includes changes in the proposed action, the size of the project area, the name of the project as well as changes in the project schedule to reflect the changes in the new Forest Plan ROD.

The Department of Agriculture, Forest Service, will prepare an Environmental Impact Statement (EIS) to provide a supply of timber for the Tongass National Forest timber sale program, to identify recreational opportunities and potential watershed project needs and to develop a road management plan for the project area. The Record of Decision will disclose where, if any, the Forest Service has decided to provide timber harvest units, roads, associated timber harvesting facilities, identify dispersed recreation opportunities, and potential watershed projects. The proposed action is to harvest timber on a estimated 2100 acres and to provide multiple timber sale opportunities for the total of approximately 41 million board feet (mmbf) of timber. Timber harvest will be accomplished using a variety of silvicultural prescriptions and harvest methods that meet the standards and guidelines of the Tongass Forest Plan. This project would include the construction of up to 33 miles of road and one new log transfer facility (LTF) within the project area. This project may also include an analysis and decision for a nonsignificant amendment to the Forest Plan to revise the location of small Old Growth Reserve(s) within the study area. Recreational opportunities for enhancement may include dispersed sites for camping, and improved access for hunting and subsistence users. Potential watershed projects may include existing land slide restoration and fish enhancement. A range of alternatives responsive to significant issues will be developed and will include a no-action alternative. The Fanshaw project area is approximately 92,000 acres in size and is located on parts of Value Comparison Units 820, 830, 840, 850, 860, 870, 880, 890, and 900 on the mainland on the Petersburg and Juneau Ranger Districts of the Tongass National Forest. Part of this project area is within Inventoried Roadless Areas Fanshaw #201, Windham—Port Houghton #308 and Spires #202 as identified by the Tongass Land and Resource Management Plan.

DATES: Comments concerning the scope of this project should be received by June 15, 2000.

ADDRESSES: Please send written comments to the Petersburg Ranger District; Tongass National Forest; Attn: Tom Parker; Fanshaw Project EIS; PO Box 1328; Petersburg, AK 99833.

FOR FURTHER INFORMATION CONTACT: Questions about the proposal and EIS should be directed to Patricia Grantham, District Ranger, Petersburg Ranger District, Tongass National Forest, PO Box 1328, Petersburg, AK 99833; telephone (907) 772–3871 or Tom Parker, Interdisciplinary Team Leader, Petersburg Ranger District, PO Box 1328, Petersburg, AK 99833; telephone (907) 772–3871.

SUPPLEMENTARY INFORMATION: Public participation has been an integral component of the study process and will be especially important at several points during the analysis. The proposed activities were first identified during the Port Houghton/Cape Fanshaw EIS, which incorporated aspects of collaborative stewardship. During the last year, the Forest Service has been seeking information, comments, and assistance from Federal, State, and local agencies, Federally-recognized Indian tribes, and individuals and organizations that may be interested in, or affected by, the proposed activities. Written scoping comments have been solicited through a scoping package that was sent to the project mailing list and available at open houses in Petersburg, Juneau and Kake, Alaska. The scoping process includes: (1) identification of potential issues; (2) identification of issues to be analyzed in depth; and, (3) elimination of insignificant issues or those which have been covered by a previous environmental review. For the Forest Service to best use the scoping input, comments should be received by June

15, 2000 (30 days from expected publication).

Based on results of scoping and the resource capabilities within the project area, alternatives, including a ''no action'' alternatives, will be developed for the Draft Environmental Impact Statement. The Draft Environmental Impact Statement is projected to be filed with the Environmental Protection Agency (EPA) in the summer 2000. Subsistence hearings, as provided for in Title VIII, Section 810 of the Alaska National Interest Lands Conservation Act (ANILCA), will occur, if necessary, during the comment period on the Draft Environmental Impact Statement. The Final Environmental Impact Statement and Record of Decision are anticipated to be published in February 2001.

The comment period on the Draft Environmental Impact Statement will be 45 days from the date the Environmental Protection Agency publishes the notice of availability in the **Federal Register**.

The Forest Service believes, at this early stage, it is important to give reviewers notice of several court rulings related to public participation in the environmental review process. First, reviewers of Draft Environmental Impact Statements must structure their participation in the environmental review of the proposal so that it is meaningful and alerts an agency to the reviewer's position and contentions. *Vermont Yankee Nuclear Power Corp.* v. *NRDC,* 435 U.S. 519, 553, (1978). Environmental objections that could have been raised at the Draft Environmental Impact Statement stage may be waived or dismissed by the courts. *City of Angoon* v. *Hodel,* 803 F.2nd 1016, 1022 (9th Cir. 1986) and *Wisconsin Heritages, Inc.* v. *Harris,* 490 F. Supp. 1334, 1338 (E.D. Wis. 1980). Because of these court rulings, it is very important that those interested in this proposed action participate by the close of the 45-day comment period so that substantive comments and objections are made available to the Forest Service at a time when it can meaningfully consider them and respond to them in the Final Environmental Impact Statement.

To assist the Forest Service in identifying and considering issues and concerns of the proposed action, comments during scoping and comments on the Draft Environmental Impact Statement should be as specific as possible. It is also helpful if comments refer to specific pages or chapters of the Draft Environmental Impact Statement. Comments may also address the adequacy of the Draft Environmental Statement or the merits of the alternatives formulated and discussed in the statement. Reviewers may wish to refer to the Council on Environmental Quality Regulations for implementing the procedural provisions of the National Environmental Policy Act at 40 CFR 1503.3 in addressing these points. Comments received in response to this solicitation, including names and addresses of those who comment, will be considered part of the public record on this proposed action and will be available for public inspection. Comments submitted anonymously will be accepted and considered; however, those who submit anonymous comments will not have standing to appeal the subsequent decision under 36 CFR Parts 215 or 217. Additionally, pursuant to 7 CFR 1.27(d), any person may request the agency to withhold a submission from the public record by showing how the Freedom of Information Act (FOIA) permits such confidentiality. Requesters should be aware that, under FOIA, confidentiality may be granted in only very limited circumstances, such as to protect trade secrets. The Forest Service will inform the requester of the agency's decision regarding the request for confidentiality, and where the request is denied, the agency will return the submission and notify the requester that the comments may be resubmitted with or without name and address within 7 days.

Permits which may be required for implementation of the project include the following:

1. U.S. Army Corps of Engineers
   —Approval of discharge of dredged or fill material into the waters of the United States under Section 404 of the Clean Water Act;
   —Approval of the construction of structures or work in navigable waters of the United States under Section 10 of the Rivers and Harbors Act of 1899;
2. Environmental Protection Agency
   —National Pollutant Discharge Elimination System (402) Permit;
   —Review Spill Prevention Control and Countermeasure Plan;
3. State of Alaska, Department of Natural Resources
   —Tideland Permit and Lease or Easement;
4. State of Alaska, Department of Environmental Conservation
   —Solid Waste Disposal Permit;
   —Certification of Compliance with Alaska Water Quality Standards (401 Certification)

Responsible Official

Carol Jorgensen, Assistant Forest Supervisor, Tongass National Forest, PO BOX 309, Petersburg, Alaska 99833, is the responsible official. The responsible official will consider the comments, response, disclosure of environmental consequences, and applicable laws, regulations, and policies in making the decision and stating the rationale in the Record of Decision.

Dated: April 10, 2000.

Carol J. Jorgensen,

Assistant Forest Supervisor.

[FR Doc. 00–9951 Filed 5–3–00; 8:45 am]

BILLING CODE 3410–11–M

DEPARTMENT OF AGRICULTURE

Rural Telephone Bank

Staff Briefing for the Board of Directors

ACTION: Board of Directors Meeting.

TIME AND DATE: 2:00 p.m., Thursday, May 11, 2000.

PLACE: Room 5030, South Building, Department of Agriculture, 1400 Independence Avenue, SW, Washington, DC.

STATUS: Open.

MATTERS TO BE DISCUSSED: 1. Current telecommunications industry issues.

2. Status of PBO planning and recommendations to accelerate privatization of the Bank.

3. President's proposed budget for FY 2001.

4. Office of the Inspector General's audit report on FY 1999 financial statements.

5. FY 1999 annual report of the Board.

6. Administrative issues.

TIME AND DATE: 9:00 a.m., Friday, May 12, 2000.

PLACE: Room 104–A, The Williamsburg Room, Department of Agriculture, 12th & Jefferson Drive, SW, Washington, DC.

STATUS: Open.

MATTERS TO BE CONSIDERED: The following matters have been placed on the agenda for the Board of Directors meeting:

1. Call to order.

2. Action on Minutes of the February 11, 2000, board meeting.

3. Report on loans approved in the second quarter of FY 2000.

4. Report on second quarter financial activity for FY 2000.

5. Privatization Committee report.

6. Action on the Bank's annual report for FY 1999.

7. Adjournment.

CONTACT PERSON FOR MORE INFORMATION: Roberta D. Purcell, Assistant Governor, Rural Telephone Bank, (202) 720–9554.

Dated: April 28, 2000.

Christopher McLean,

Acting Governor, Rural Telephone Bank.

[FR Doc. 00–11279 Filed 5–2–00; 2:48 pm]

BILLING CODE 3410–15–P

UNITED STATES COMMISSION ON CIVIL RIGHTS

Sunshine Act Notice

AGENCY: U.S. Commission on Civil Rights.

DATE AND TIME: Friday, May 12, 2000, 9:30 a.m.

PLACE: U.S. Commission on Civil Rights, 624 Ninth Street, N.W., Room 540, Washington, DC 20425.

STATUS:

Agenda

I. Approval of Agenda
II. Approval of Minutes of April 14, 2000 Meeting
III. Announcements
IV. Staff Director's Report
V. Police Practices and Civil Rights in New York City Report
VI. Future Agenda Items

CONTACT PERSON FOR FURTHER INFORMATION: David Aronson, Press and Communications (202) 376–8312.

Edward A. Hailes, Jr.,

Acting General Counsel.

[FR Doc. 00–11282 Filed 5–2–00; 2:48 pm]

BILLING CODE 6335–01–M

DEPARTMENT OF COMMERCE

Foreign-Trade Zones Board

[Order No. 1083]

Grant of Authority; Establishment of a Foreign-Trade Zone County of Boundary, Idaho

Pursuant to its authority under the Foreign-Trade Zones Act of June 18, 1934, as amended (19 U.S.C. 81a-81u), the Foreign-Trade Zones Board (the Board) adopts the following Order:

Whereas, the Foreign-Trade Zones Act provides for " * * * the establishment. * * * of foreign-trade zones in ports of entry of the United States, to expedite and encourage foreign commerce, and for other purposes," and authorizes the Foreign-Trade Zones Board to grant to qualified corporations the privilege of establishing foreign-trade zones in or adjacent to U.S. Customs ports of entry;

Whereas, the County of Boundary, Idaho (the Grantee), has made application to the Board (FTZ Docket 26–99, filed 5/24/99), requesting the establishment of a foreign-trade zone at a site in the Eastport (Boundary County), Idaho area, adjacent to the Eastport, Idaho Customs port of entry;

Whereas, notice inviting public comment has been given in the **Federal Register** (64 FR 29993, 6/4/99); and,

Whereas, the Board adopts the findings and recommendations of the examiner's report, and finds that the requirements of the FTZ Act and the Board's regulations are satisfied, and that approval of the application is in the public interest;

Now, Therefore, the Board hereby grants to the Grantee the privilege of establishing a foreign-trade zone, designated on the records of the Board as Foreign-Trade Zone No. 242, at the site described in the application, subject to the Act and the Board's regulations, including Section 400.28.

Signed at Washington, DC, this 20th day of April 2000.

Foreign-Trade Zones Board.

William M. Daley,

Secretary of Commerce Chairman and Executive Officer.

Attest: Dennis Puccinelli,

Acting Executive Secretary.

[FR Doc. 00–11175 Filed 5–3–00; 8:45 am]

BILLING CODE 3510–DS–P

DEPARTMENT OF COMMERCE

Foreign-Trade Zones Board

[Docket 15–2000]

Foreign-Trade Zone 37—Orange County, NY; Request for Processing Authority; Newburgh Dye & Printing, Inc.; Prismatic Dyeing & Finishing, Inc. (Textile Finishing)

An application has been submitted to the Foreign-Trade Zones Board (the Board) by the FTZ of Orange, Ltd., operator of FTZ 37, pursuant to § 400.32(b)(1) of the Board's regulations (15 CFR Part 400), requesting authority on behalf of Newburgh Dye & Printing, Inc. (NDPI), and Prismatic Dyeing & Finishing, Inc. (PDFI), to process foreign-origin textile products under FTZ procedures within FTZ 37. It was formally filed on April 26, 2000.

NDPI and PDFI operate separate textile processing facilities (120,000 sq.ft., 250 employees) within FTZ 37—Site 1 located adjacently at 40–41A Wisner Avenue in Newburgh, New York, within the Stewart/Newburgh State Enterprise Zone and the Newburgh/Kingston Federal Empowerment Zone. In October 1999, the Wisner Avenue site received temporary general-purpose FTZ authority (to 11–1–2003) from the Board to include the two facilities (120,000 sq.ft. authorized) within FTZ 37. The FTZ of Orange is now requesting authority on behalf of NDPI and PDFI to process textile fabrics under FTZ procedures for the U.S. market and export. In this activity, foreign, quota-class woven and knit fabrics (HTSUS 5007.00 through 6022.99) would be admitted to the zone under privileged foreign status (19 CFR 146.41) in greige form to be dyed, printed, and finished using domestic dyes and chemicals. The proposed finishing activity would involve shrinking, sanferizing, desizing, sponging, bleaching, cleaning/laundering, calendaring, hydroxilating, decatizing, fulling, mercerizing, chintzing, moiring, framing/beaming, stiffening, weighting, crushing, tubing, thermofixing, anti-microbial finishing, shower proofing, flame retardation, and embossing of customer-owned fabric. The finished privileged foreign status fabric would then be transferred from the zone for Customs entry under its original textile quota and HTS classifications (no activity would be permitted that would result in transformation, tariff shift, or change in quota class or country of origin), with appropriate duty assessment and quota decrement.

FTZ procedures would exempt NDPI and PDFI from Customs duty payments on the foreign fabric processed for re-export. On shipments for the U.S. market, full duty payment would be deferred until the fabric is transferred from the zone for Customs entry. The application indicates that the savings from FTZ procedures would help improve the facilities' international competitiveness.

The application has requested review under Section 400.32(b)(1) of the FTZ Board regulations based on the election of privileged foreign status for the fabric admitted to FTZ 37.

Public comment on the application is invited from interested parties. Submissions (original and three copies) shall be addressed to the Board's Executive Secretary at the address below. The closing date for their receipt is June 7, 2000.

A copy of the application will be available for public inspection at the following location: Office of the Executive Secretary, Foreign-Trade Zones Board, Room 4008, U.S. Department of Commerce, 14th Street & Pennsylvania Avenue, NW., Washington, DC 20230.

Dated: April 26, 2000.

Dennis Puccinelli,

Acting Executive Secretary.

[FR Doc. 00–11174 Filed 5–3–00; 8:45 am]

BILLING CODE 3510–DS–P

DEPARTMENT OF COMMERCE

International Trade Administration

[A–570–830]

Coumarin From the People's Republic of China; Final Results of Expedited Sunset Review

AGENCY: Import Administration, International Trade Administration, Department of Commerce.

ACTION: Notice of final results of expedited sunset review.

SUMMARY: On December 30, 1999, the Department of Commerce published the notice of initiation of sunset review of the antidumping duty order on coumarin from the People's Republic of China (''China''). On the basis of a notice of intent to participate and an adequate substantive response from domestic interested parties and inadequate response (in this case no response) from respondent interested parties, we determined to conduct an expedited sunset review. Based on our analysis of the substantive comments received, we find that revocation of the antidumping duty order would be likely to lead to continuation or recurrence of dumping at the levels listed below in the section entitled ''Final Results of the Review.''

EFFECTIVE DATE: May 4, 2000.

FOR FURTHER INFORMATION CONTACT: Martha V. Douthit or Carole A. Showers, Office of Policy, Import Administration, International Trade Administration, U.S. Department of Commerce, 14th Street and Constitution Avenue, NW, Washington, DC 20230; telephone: (202) 482–5050 and (202) 482–3217, respectively.

SUPPLEMENTARY INFORMATION:

Statute and Regulations

Unless otherwise indicated, all citations to the Tariff Act of 1930, as amended (''the Act''), are references to the provisions effective January 1, 1995, the effective date of the amendments made to the Act by the Uruguay Round Agreements Act (''URAA''). In addition, unless otherwise indicated, all citations to the Department of Commerce's (''the Department's'') regulations are to 19 CFR part 351 (1999). Guidance on methodological or analytical issues relevant to the Department's conduct of sunset reviews is set forth in the Department Policy Bulletin 98:3—*Policies Regarding the Conduct of Five-year (''Sunset'') Reviews of Antidumping and Countervailing Duty Orders; Policy Bulletin,* 63 FR 18871 (April 16, 1998) (''Sunset Policy Bulletin'').

Background

On December 30, 1999, the Department published the notice of initiation of the sunset review of the antidumping duty order on coumarin from China (64 FR 73510) pursuant to section 751(c) of the Act. We invited parties to comment. On the basis of a notice of intent to participate and adequate substantive response of domestic interested parties, inadequate response (in this case no response) from respondent interested parties, we determined it was appropriate to conduct an expedited sunset review. The Department has conducted this sunset review in accordance with sections 751 and 752 of the Act.

Scope of Review

The product covered by this order is coumarin from China. Coumarin is an aroma chemical with the chemical formula $C_9 H_6 O_2$ that is also known by other names, including 2H–1-benzopyran-2-one,1,2-benzopyrone, cis-o-coumaric acid lactone, coumarin anhydride, 2–Oxo-1,2-benzopyran, 5,6-benzo-alpha-pyrone, ortho-hydroxyc innamic acid lactone, cis-ortho-coumaric acid anhydride, and tonka bean camphor. All forms and variations of coumarin are included within the scope of the order, such as coumarin in crystal, flake, or powder form, and ''crude'' or unrefined coumarin (*i.e.* prior to purification or crystallization). Excluded from the scope of this order are ethylcoumarins $C_{11} H_{10} O_2$ and methylcoumarins $C_{10} H_8 O_2$. Coumarin is classifiable under subheading 2932.21.0000 of the Harmonized Tariff Schedule of the United States (''HTSUS''). Although the HTSUS subheading is provided for convenience and customs purposes, our written description of the scope of this review is dispositive.

The antidumping duty order remains in effect for all manufacturers, producers, and exporters of coumarin from China.

Analysis of Comments Received

All issues raised in the substantive responses by parties to this sunset review are addressed in the ''Issues and Decision Memorandum'' (''Decision Memo'') from Jeffrey A. May, Director, Office of Policy, Import Administration, to Troy H. Cribb, Acting Assistant Secretary for Import Administration, dated April 28, 2000, which is hereby adopted in this notice. The issues discussed in the attached Decision Memo include the likelihood of continuation or recurrence of dumping and the magnitude of the margin likely to prevail were the order revoked. Parties can find a complete discussion of all issues raised in this review and the corresponding recommendations in this public memorandum, which is on file in the Department's Central Record Unit, Room B–099, 14th Street and Constitution Ave., NW, Washington, DC 20230.

In addition, a complete version of the Decision Memo can be accessed directly on the Web at www.ita.doc.gov/import—admin/records/frn. The paper copy and electronic version of the Decision Memo are identical in content.

Final Results of Review

We determine that revocation of the antidumping duty order would be likely to lead to continuation or recurrence of dumping at the following percentage weighted-average margins:

Manufacturer/producer/exporter	Margin (percent)
Jiangsu Native Produce Import/Export Corporation	31.02
Tiangin Native Produce Import/Export Corporation	70.45
All Others	160.80

This notice also serves as the only reminder to parties subject to administrative protective orders (''APO'') of their responsibility concerning the return or destruction of proprietary information disclosed under APO in accordance with 19 CFR 351.305 of the Department's regulations. Timely notification of the return or destruction of APO materials or conversion to judicial protective order is hereby requested. Failure to comply with the regulations and terms of an APO is a violation which is subject to sanction.

We are issuing and publishing this determination and notice in accordance with sections 751(c), 752, and 777(i)(1) of the Act.

Dated: April 28, 2000.

Troy H. Cribb,

Acting Assistant Secretary for Import Administration.

[FR Doc. 00–11169 Filed 5–3–00; 8:45 am]

BILLING CODE 3510–DS–P

DEPARTMENT OF COMMERCE

International Trade Administration

[A–570–838]

Notice of Postponement of Preliminary Results of Antidumping Duty Administrative Review: Suspension Agreement on Honey from the People's Republic of China

AGENCY: Import Administration, International Trade Administration, Department of Commerce.

ACTION: Notice of postponement of preliminary results of antidumping duty administrative review.

EFFECTIVE DATE: May 4, 2000.

FOR FURTHER INFORMATION CONTACT: Becky J. Hagen or James C. Doyle, Office IX, DAS Group III, Import Administration, International Trade Administration, U.S. Department of Commerce, 14th Street and Constitution Avenue, NW, Washington, DC 20230; telephone (202) 482–3362 and (202) 482–0159, respectively.

Postponement of Preliminary Results

The Department of Commerce (''the Department'') is postponing the preliminary results in the antidumping administrative review of the Suspension Agreement on Honey from the People's Republic of China (''PRC''). The deadline for issuing the preliminary results in these administrative reviews is now August 30, 2000.

On August 30, 1999, the Department initiated this administrative review, setting May 2, 2000 as the date for issuing the preliminary results of the review. *See Initiation of Antidumping and Countervailing Duty Administrative Reviews and Requests for Revocation in Part,* August 30, 1999 (64 FR 53318). Because it is only the second time a review of a suspension agreement involving export limits and reference prices has been initiated by the Department, raising novel legal and enforcement issues, we have determined that it is not practicable to complete this review within the normal time frame and are therefore extending the time limit for these preliminary results of the administrative review of the Suspension Agreement on Honey from the PRC by 120 days, in accordance with section 751(a)(3)(A) of the Tariff Act of 1930, as amended.

The date for issuing the preliminary results is moved from May 2, 2000 to August 30, 2000.

Dated: April 28, 2000.

Joseph A. Spetrini,

Deputy Assistant Secretary, AD/CVD Enforcement Group III.

[FR Doc. 00–11172 Filed 5–3–00; 8:45 am]

BILLING CODE 3510–DS–P

DEPARTMENT OF COMMERCE

International Trade Administration

[A–588–850, A–588–851, A–791–808]

Notice of Final Determinations of Sales at Less Than Fair Value: Certain Large Diameter Carbon and Alloy Seamless Standard, Line and Pressure Pipe from Japan; and Certain Small Diameter Carbon and Alloy Seamless Standard, Line and Pressure Pipe from Japan and the Republic of South Africa

AGENCY: Important Administration, International Trade Administration, Department of Commerce.

EFFECTIVE DATE: May 4, 2000.

FOR FURTHER INFORMATION CONTACT: Charles Riggle at (202) 482–5288 or Constance Handley at (202) 482–0631, Important Administration, Room 1870, International Trade Administration, U.S. Department of Commerce, 14th Street and Constitution Avenue, NW., Washington DC 20230.

The Applicable Statute and Regulations

Unless otherwise indicated, all citations to the statute are references to the provisions effective January 1, 1995, the effective date of the amendments made to the Tariff Act of 1930 (''the Act'') by the Uruguay Round Agreements Act (''URAA''). In addition, unless otherwise indicated, all citations to the Department of Commerce (''the Department'') regulations refer to the regulations codified at 19 CFR part 351 (April 1999).

Final Determinations

We determine that large diameter carbon and alloy seamless standard, line and pressure pipe (large diameter seamless pipe) from Japan, and small diameter carbon and alloy seamless standard, line and pressure pipe (small diameter seamless pipe) from Japan and the Republic of South Africa (South Africa) are being sold in the United States at less than fair value (LTFV), as provided in section 735 of the Act. The estimated margins are shown in the *Suspension of Liquidation* section of this notice.

Case History

The preliminary determinations in these investigations were issued on December 7, 1999. *See Notice of Preliminary Determinations of Sales at Less Than Fair Value: Certain Large Diameter Carbon and Alloy Seamless Standard, Line and Pressure Pipe from Japan and Certain Small Diameter Carbon and Alloy Seamless Standard, Line and Pressure Pipe from Japan and the Republic of South Africa,* 64 FR 69718 (December 14, 1999) ''*(Preliminary Determinations*''). On January 13, 2000, in the investigations involving Japan, case briefs were filed by Sumitomo Metal Industries, Ltd. (SMI), MC Tubular Products, Inc. (MCTP) and the American Boiler Manufacturers Association (ABMA). The petitioners [1] submitted a rebuttal brief on January 21, 2000. No briefs were filed in the investigation involving the Republic of South Africa (South Africa). On March 9, 2000, we published an affirmative preliminary determination of critical circumstances in the investigations involving small diameter pipe from Japan and South Africa.[2] A hearing was held on March 14, 2000, in the context of the investigations involving Japan. On April 26, 2000, the petitioners requested that the scope of the large diameter investigation be amended to exclude certain products.

Analysis of Comments Received

All issues raised in the case and rebuttal briefs by parties to these investigations are addressed in the ''Issues and Decision Memorandum'' (Decision Memorandum) from Holly A. Kuga, Acting Deputy Assistant Secretary, Import Administration, to Troy H. Cribb, Acting Assistant Secretary for Import Administration, dated April 27, 2000, which is hereby adopted by this notice.

A list of the issues which parties have raised and to which we have responded, all of which are in the Decision Memorandum, is attached to this notice as an Appendix. Parties can find a complete discussion of all issues raised in these investigations and the corresponding recommendations in this public memorandum which is on file in the Central Records Unit, room B–099 of the main Department building.

[1] The petitioners in the large diameter pipe cases include U.S. Steel Group (a unit of USX Corp.), Lorain Tubular Co. LLC (''formerly USS/Kobe Steel Company'') and the United Steel Workers of America. The petitioners in the small diameter pipe cases include Koppel Steel Corporation, Sharon Tube Company, U.S. Steel Group, Lorain Tubular Co. LLC and Vision Metals, Inc. (Gulf States Tube Division) and the United Steel Workers of America.

[2] *See Preliminary Determinations of Critical Circumstances: Certain Small Diameter Carbon and Alloy Seamless Standard, Line and Pressure Pipe from Japan and South Africa* 65 FR 12509 (March 9, 2000).

In addition, a complete version of the Decision Memorandum can be accessed directly on the World Wide Web at *www.ita.doc.gov/import_admin/records/frn.* The paper copy and electronic version of the Decision Memorandum are identical in content.

Scope of Investigations

For a description of the scope of this investigation, see the ''Scope and Investigations'' section of the Decision Memorandum, which is on file in B–099 and available on the Web at *www.ita.doc.gov/import_admin/records/frn/.* The scope of the investigations has been amended since the preliminary determination.

Period of Investigations

The period of the investigations (''POI'') for both the large and small diameter seamless pipe cases is April 1, 1998, through March 31, 1999.

Facts Available

In the preliminary determinations, the Department based the dumping margins for the mandatory respondents, Kawasaki Steel Corporation (Kawasaki), Nippon Steel Corporation (Nippon), and Sumitomo Metal Industries (SMI) for both investigations involving Japan; and Iscor Ltd. (Iscor) in the investigation involving South Africa, on facts otherwise available pursuant to section 776(a)(2)(A) of the Act. The use of facts otherwise available is necessary because the record does not contain company-specific information due to the fact that each of these respondents failed to respond to the Department's questionnaire, nor did they provide any indication that they were unable to do so. Therefore, the Department found that they failed to cooperate by not acting to the best of their ability. As a result, pursuant to section 776(b), the Department used an adverse inference in selecting from the facts available. Specifically, the Department assigned to the mandatory respondents the highest margins alleged in the respective petitions. We continue to find these margins corroborated, pursuant to section 776(c) of the Act, for the reasons discussed in the *Preliminary Determinations.* No interested parties have objected to the use of adverse facts available for the mandatory respondents in these investigations, nor to the Department's choice of facts available. For its final determinations, the Department is continuing to use the highest margins alleged by petitioners for all non-responding mandatory respondents in these proceedings. *See Preliminary Determinations.* In addition, the Department has left unchanged from the preliminary determinations the ''All Others Rate'' in each investigation.

Critical Circumstances

No comments were received regarding the Department's preliminary critical circumstances determinations, and the Department has not made any changes to those determinations. For the reasons given in the preliminary determinations, the Department continues to find that critical circumstances exist with respect to small diameter seamless pipe imported from SMI, Kawasaki and Nippon in the investigation involving Japan and Iscor in the investigation involving South Africa in accordance with section 733(e)(1) of the Act.

As set forth in preliminary determinations, because the massive imports criterion necessary our to find critical circumstances has not been met with respect to firms other than SMI, Kawasaki, Nippon and Iscor, the Department continues to find, for the purposes of these final determinations, that critical circumstances do not exist for imports of small diameter seamless pipe for the ''all others'' category in both the Japan and South Africa investigations.

There was no allegation of critical circumstances in the investigation of large diameter pipe from Japan.

Continuation of Suspension of Liquidation

In accordance with section 735(c)(1)(B) of the Act, we are directing the Customs Service to continue to suspend all entries of small diameter seamless pipe from the Japan produced by Kawasaki, Nippon and SMI and all entries of small diameter seamless pipe from South Africa produced by Iscor, that are entered, or withdrawn from warehouse, for consumption on or after September 15, 1999, the date 90 days prior to the date of publication of our preliminary determination. The Customs Service will also be directed to continue to suspend liquidation of all entries of large diameter seamless pipe exported from Japan and all entries of small diameter seamless pipe from Japan and South Africa produced by all companies not named above, that are entered, or withdrawn from warehouse, for consumption on or after December 14, 1999, the date of publication of our preliminary determinations in the **Federal Register**. The Customs Service shall require a cash deposit or bond equal to the dumping margin, as indicated in the chart below. These instructions suspending liquidation will remain in effect until further notice. The dumping margins are provided below:

Manufacturer/exporter	Margin (percent)
Japan—large diameter	
Nippon Steel Corporation	107.80
Kawasaki Steel Corporation	107.80
Sumitomo Metal Industries	107.80
All others	68.88
Japan—small diameter	
Nippon Steel Corporation	106.07
Kawasaki Steel Corporation	106.07
Sumitomo Metal Industries	106.07
All others	70.43
South Africa—small diameter	
Iscor Ltd.	43.51
All others	40.17

ITC Notification

In accordance with section 735(d) of the Act, we have notified the International Trade Commission (ITC) of our determinations. As our final determinations are affirmative, the ITC will, within 45 days, determine whether these imports are materially injuring, or threaten material injury to, the U.S. industry. If the ITC determines that material injury or threat of material injury does not exist, the proceeding will be terminated and all securities posted will be refunded or canceled. If the ITC determines that such injury does exist, the Department will issue an antidumping duty order directing the Customs Service to assess antidumping duties on all imports of the subject merchandise entered, or withdrawn from warehouse, for consumption on or after the effective date of the suspension of liquidation.

These determinations are published pursuant to sections 735(d) and 777(i)(1) of the Act.

Dated: April 27, 2000.

Troy H. Cribb,

Acting Assistant Secretary for Import Administration.

Appendix I—Issues in Decision Memo

Comments and Responses

1. Class or Kind

[FR Doc. 00–11171 Filed 5–3–00; 8:45 am]

BILLING CODE 3510–DS–M

DEPARTMENT OF COMMERCE

International Trade Administration

[A–351–825; A–533–810; A–588–833; A–469–805]

Stainless Steel Bar From Brazil, India, Japan, and Spain; Final Results of Antidumping Duty Expedited Sunset Reviews

AGENCY: Import Administration, International Trade Administration, Department of Commerce.

ACTION: Notice of final results of antidumping duty expedited sunset reviews: Stainless steel bar from Brazil, India, Japan, and Spain.

SUMMARY: On December 30, 1999, the Department of Commerce (''the Department'') published the notice of initiation of sunset reviews of the antidumping duty orders on stainless steel bar (''SSB'') from Brazil, India, Japan, and Spain. On the basis of notices of intent to participate and adequate substantive comments filed on behalf of domestic interested parties and inadequate response (in these cases, no response) from respondent interested parties, we determined to conduct expedited reviews. As a result of these reviews, we find that revocation of the antidumping duty orders would be likely to lead to continuation or recurrence of dumping at the levels listed below in the section entitled ''Final Results of Reviews.''

EFFECTIVE DATE: May 4, 2000.

FOR FURTHER INFORMATION CONTACT: Mark D. Young, Import Administration, International Trade Administration, U.S. Department of Commerce, Washington, DC 20230; telephone: (202) 482–6397.

SUPPLEMENTARY INFORMATION:

Statute and Regulations

These reviews are being conducted pursuant to sections 751(c) and 752 of the Tariff Act of 1930, as amended (''the Act''). The Department's procedures for the conduct of sunset reviews are set forth in Procedures for Conducting Five-year (''Sunset'') Reviews of Antidumping and Countervailing Duty Orders, 63 FR 13516 (March 20, 1998) (''Sunset Regulations'') and 19 CFR part 351 (1999) in general. Guidance on methodological or analytical issues relevant to the Department's conduct of sunset reviews is set forth in the Department's Policy Bulletin 98:3—Policies Regarding the Conduct of Five-year (''Sunset'') Reviews of Antidumping and Countervailing Duty Orders; Policy Bulletin, 63 FR 18871 (April 16, 1998) (''Sunset Policy Bulletin'').

Background

On December 30, 1999, the Department published the notice of initiation of the sunset reviews of the antidumping duty orders on SSB from Brazil, India, Japan, and Spain (64 FR 73510). The Department received Notices of Intent to Participate on behalf of Empire Specialty Steel Inc. (formerly AL Tech Specialty Steel Corp.), Carpenter Technology Corp., Republic Technologies International (formerly Republic Engineered Steels, Inc.), Crucible Specialty Metals Division of Crucible Materials Corp., Electralloy Corp., Slater Steels Corporation, and the United Steelworkers of America, AFL–CIO/CLC (collectively ''domestic interested parties''), within the deadline specified in section 351.218(d)(1)(i) of the Sunset Regulations. The domestic interested parties claimed interested party status under section 771(9)(C) and (D) of the Act, as U.S. manufacturers of SSB and a certified union. We received complete substantive responses, in the Brazilian, Indian, Japanese, and Spanish reviews, from the domestic interested parties on January 28, 2000, within the 30-day deadline specified in the Sunset Regulations under section 351.218(d)(3)(i). In their substantive responses, the domestic interested parties stated that they were the petitioners in the original investigations of SSB from Brazil, India, Japan, and Spain. Furthermore, the domestic interested parties stated that they have been involved in these proceedings since their inception.[1] We did not receive a substantive response from any respondent interested party to these proceedings. As a result, pursuant to 751(c)(3)(B) of the Act and 19 CFR 351.218(e)(1)(ii)(C) of the Department's Regulations, the Department determined to conduct expedited, 120-day, reviews of these orders.

Scope of Review

Imports covered by these reviews are shipments of SSB, specifically articles of stainless steel in straight lengths that have been either hot-rolled, forged, turned, cold-drawn, cold-rolled or otherwise cold-finished, or ground, having a uniform solid cross section along their whole length in the shape of circles, segments of circles, ovals, rectangles (including squares), triangles, hexagons, octagons, or other convex polygons. SSB includes cold-finished SSB that are turned or ground in straight lengths, whether produced from hot-rolled bar or from straightened and cut rod or wire, and reinforcing bars that have indentations, ribs, grooves, or other deformations produced during the rolling process. Except as specified above, the term does not include stainless steel semi-finished products, cut length flat-rolled products (i.e., cut length rolled products which if less than 4.75 mm in thickness have a width measuring at least 10 times the thickness, or if 4.75 mm or more in thickness having a width which exceeds 150 mm and measures at least twice the thickness), wire (i.e., cold-formed products in coils, of any uniform solid cross section along their whole length, which do not conform to the definition of flat-rolled products), and angles, shapes and sections. The SSB subject to these reviews are currently classifiable under subheadings 7222.10.0005, 7222.10.0050, 7222.20.0005, 7222.20.0045, 7222.20.0075, and 7222.30.0000 of the Harmonized Tariff Schedule of the United States (''HTSUS''). Although the HTSUS subheadings are provided for convenience and customs purposes, our written description of the scope of this review is dispositive.

With respect to the order on the subject imports from Japan the Department has made two scope rulings. The following product was determined to be within the scope of the order:

The following product was determined to be outside the scope of the order:

[1] Two of the original petitioners have undergone a change of name: AL Tech Specialty Steel Corp. is now Empire Specialty Steel Inc. and Republic Engineered Steel, Inc. is now Republic Technologies International. Talley Metals Technology, Inc. also was a petitioner in these cases; Talley was acquired by Carpenter Technology Corp. and is now a part of Carpenter's operations.

Product within scope	Company	Citation
Keystone 2000	Keystone Stainless Inc	63 FR 6722 (February 10, 1998).

Product within scope	Company	Citation
M35FL steel bar	Tohoku Steel Co	64 FR 50273 (September 16, 1999).

These reviews cover all imports from all manufacturers and exporters of SSB from Brazil, India, Japan, and Spain.

Analysis of Comments Received

All issues raised in these cases by parties to these sunset reviews are addressed in the ''Issues and Decision Memorandum'' (''Decision Memo'') from Jeffrey A. May, Director, Office of Policy, Import Administration, to Troy H. Cribb, Acting Assistant Secretary for Import Administration, dated April 28, 2000, which is hereby adopted by this notice. The issues discussed in the Decision Memo include the likelihood of continuation or recurrence of dumping and the magnitude of the margin likely to prevail were the orders revoked. Parties can find a complete discussion of all issues raised in these reviews and the corresponding recommendations in this public memorandum, which is on file in room B–099 of the main Commerce Building.

In addition, a complete version of the Decision Memo can be accessed directly on the Web at www.ita.doc.gov/import_admin/records/frn/. The paper copy and electronic version of the Decision Memo are identical in content.

Final Results of Reviews

We determine that revocation of the antidumping duty orders on SSB from Brazil, India, Japan, and Spain would be likely to lead to continuation or recurrence of dumping at the following percentage weighted-average margins:

	Margin (percent)
Brazilian Manufacturers/Exporters:	
Acos Villares, S.A	19.43
All Others	19.43
Indian Manufacturers/Exporters:	
Grand Foundry Limited	3.87
Mukand, Limited	21.02
All Others	12.45
Japanese Manufacturers/Exporters:	
Aichi Steel Works, Ltd	61.47
Daido Steel Co., Ltd	61.47
Sanyo Special Steel Co., Ltd	61.47
All Others	61.47
Spanish Manufacturers/Exporters:	
Acensor, S.A. (And all successor companies including Digeco, S.A. and Clorimax, SRL)	62.85
Roldan, S.A	7.72
All Others	25.77

This notice also serves as the only reminder to parties subject to administrative protective orders (''APO'') of their responsibility concerning the return or destruction of proprietary information disclosed under APO in accordance with 19 CFR 351.305 of the Department's regulations. Timely notification of the return or destruction of APO materials or conversion to judicial protective order is hereby requested. Failure to comply with the regulations and terms of an APO is a violation which is subject to sanction.

We are issuing and publishing these results and notice in accordance with sections 751(c), 752, and 777(i)(1) of the Act.

Dated: April 28, 2000.

Troy H. Cribb,

Acting Assistant Secretary for Import Administration.

[FR Doc. 00–11170 Filed 5–3–00; 8:45 am]

BILLING CODE 3510–DS–P

DEPARTMENT OF COMMERCE

International Trade Administration

[C–122–815]

Pure Magnesium and Alloy Magnesium From Canada: Preliminary Results of Countervailing Duty Administrative Reviews

AGENCY: Import Administration, International Trade Administration, Department of Commerce.

ACTION: Notice of preliminary results of countervailing duty administrative reviews.

SUMMARY: The Department of Commerce is conducting administrative reviews of the countervailing duty orders on pure magnesium and alloy magnesium from Canada for the period January 1, 1998 through December 31, 1998. We have preliminarily determined that certain producers/exporters have received net subsidies during the period of review. If the final results remain the same as these preliminary results, we will instruct the Customs Service to assess countervailing duties as detailed in the Preliminary Results of Reviews section of this notice. Interested Parties are invited to comment on these preliminary results (*see* the Public Comment section of this notice).

EFFECTIVE DATE: May 4, 2000.

FOR FURTHER INFORMATION CONTACT: Annika O'Hara or Craig Matney, AD/CVD Enforcement, Group I, Office 1, Import Administration, U.S. Department of Commerce, 14th Street and Constitution Avenue, NW., Washington, DC 20230; telephone: (202) 482–3798 or (202) 482–1778, respectively.

Case History

On August 31, 1992, the Department of Commerce (''the Department'') published in the **Federal Register** the countervailing duty orders on pure magnesium and alloy magnesium from Canada (57 FR 39392). On August 11, 1999, the Department published a notice of ''Opportunity to Request Administrative Review'' of these countervailing duty orders (64 FR 43649). We received timely requests for review from Norsk Hydro Canada Inc. (''NHCI''), the Government of Quebec (''GOQ''), and the petitioner. We initiated these reviews, covering calendar year 1998, on October 1, 1999 (64 FR 53318). In accordance with 19 CFR 351.213(b), these reviews cover NHCI, the only producer or exporter of the subject merchandise for which a review was specifically requested. These reviews cover 16 subsidy programs.

On November 30, 1999, we issued countervailing duty questionnaires to NHCI, the GOQ, and the Government of Canada (''GOC''). We received questionnaire responses from the GOC on January 12, 2000, and from NHCI and the GOQ on January 14, 2000.

Applicable Statute and Regulations

Unless otherwise indicated, all citations to the statute are references to the provisions of section 751(a) of the Tariff Act of 1930, as amended by the Uruguay Round Agreements Act (''URAA''), effective January 1, 1995 (''the Act''). Unless otherwise indicated, all citations to the Department's regulations are to 19 CFR part 351 (1999).

Scope of the Reviews

The products covered by these reviews are shipments of pure and alloy magnesium from Canada. Pure magnesium contains at least 99.8 percent magnesium by weight and is

sold in various slab and ingot forms and sizes. Magnesium alloys contain less than 99.8 percent magnesium by weight with magnesium being the largest metallic element in the alloy by weight, and are sold in various ingot and billet forms and sizes.

The pure and alloy magnesium subject to review is currently classifiable under items 8104.11.0000 and 8104.19.0000, respectively, of the Harmonized Tariff Schedule of the United States (''HTSUS''). Although the HTSUS subheadings are provided for convenience and customs purposes, the written descriptions of the merchandise subject to the orders are dispositive.

Secondary and granular magnesium are not included in the scope of these orders. Our reasons for excluding granular magnesium are summarized in *Preliminary Determination of Sales at Less Than Fair Value: Pure and Alloy Magnesium From Canada*, 57 FR 6094 (February 20, 1992).

Period of Review

The period of review (''POR'') for which we are measuring subsidies is from January 1, 1998 through December 31, 1998.

Subsidies Valuation Information

Discount Rate

As noted below, the Department preliminarily finds that NHCI benefitted from one countervailable subsidy program during the POR: Article 7 grants from the Quebec Industrial Development Corporation. As in the investigations and previous administrative reviews of this case, we have used the company's cost of long-term, fixed-rate debt in the year in which this grant was approved as the discount rate for purposes of calculating the benefit pertaining to the POR.

Allocation Period

In the investigations and previous administrative reviews of this case, the Department used, as the allocation period for non-recurring subsidies, the average useful life (''AUL'') of renewable physical assets in the magnesium industry as recorded in the Internal Revenue Service's 1977 Class Life Asset Depreciation Range System (''the IRS tables''), *i.e.,* 14 years. In these administrative reviews, the Department is applying for the first time its new countervailing duty regulations. Pursuant to section 351.524(d)(2) of these regulations, the Department will use the AUL in the IRS tables as the allocation period unless a party can show that the IRS tables do not reasonably reflect the company-specific AUL or the country-wide AUL for the industry. If a party can show that either of these time periods differs from the AUL in the IRS tables by one year or more, the Department will use the company-specific AUL or the country-wide AUL for the industry as the allocation period.

Neither NHCI nor the petitioner has contested using the AUL reported for the magnesium industry in the IRS tables. We are, therefore, continuing to allocate non-recurring benefits over 14 years.

Analysis of Programs

I. Program Preliminarily Determined to Confer Countervailable Subsidies

A. Article 7 Grant from the Québec Industrial Development Corporation (''SDI'')

SDI (Société de Développement Industriel du Québec) administers development programs on behalf of the GOQ. SDI provides assistance under Article 7 of the SDI Act in the form of loans, loan guarantees, grants, assumptions of costs associated with loans, and equity investments. This assistance involves projects capable of having a major impact upon the economy of Quebec. Article 7 assistance greater than 2.5 million dollars must be approved by the Council of Ministers and assistance over 5 million dollars becomes a separate budget item under Article 7. Assistance provided in such amounts must be of ''special economic importance and value to the province.'' (*See Final Affirmative Countervailing Duty Determinations: Pure Magnesium and Alloy Magnesium from Canada*, 57 FR 30946, 30948 (July 13, 1992) (''*Magnesium Investigation*'').)

In 1988, NHCI was awarded a grant under Article 7 to cover a large percentage of the cost of certain environmental protection equipment. In the *Magnesium Investigation*, the Department determined that NHCI received a disproportionately large share of assistance under Article 7. On this basis, we determined that the Article 7 grant was limited to a specific enterprise or industry, or group of enterprises or industries, and, therefore, countervailable. In these reviews, neither the GOQ nor NHCI has provided new information which would warrant reconsideration of this determination.

In the *Magnesium Investigation*, the Department found that the Article 7 assistance received by NHCI constituted a non-recurring grant because it represented a one-time provision of funds. In the *Preliminary Results of First Countervailing Duty Administrative Reviews: Pure Magnesium and Alloy Magnesium From Canada*, 61 FR 11186, 11187 (March 19, 1996), we found this determination to be consistent with the principles enunciated in the Allocation section of the *General Issues Appendix* (''*GIA*'') appended to the *Final Countervailing Duty Determination; Certain Steel Products from Austria*, 58 FR 37225, 37226 (July 9, 1993). In the current review, no new information has been placed on the record that would cause us to depart from this treatment. Therefore, in accordance with section 351.524(b)(2) of our regulations, we have continued to allocate the benefit of this grant over time. We used our standard grant methodology as described in section 351.524(d) of the regulations to calculate the countervailable subsidy. We divided the benefit attributable to the POR by NHCI's total sales of Canadian-manufactured products in the POR. On this basis, we preliminarily determine the countervailable subsidy from the Article 7 SDI grant to be 1.38 percent *ad valorem* for NHCI.

II. Programs Preliminarily Determined To Be Not Used

We examined the following programs and preliminarily determine that NHCI did not apply for or receive benefits under these programs during the POR:

- St. Lawrence River Environment Technology Development Program
- Program for Export Market Development
- The Export Development Corporation
- Canada-Quebec Subsidiary Agreement on the Economic Development of the Regions of Quebec
- Opportunities to Stimulate Technology Programs
- Development Assistance Program
- Industrial Feasibility Study Assistance Program
- Export Promotion Assistance Program
- Creation of Scientific Jobs in Industries
- Business Investment Assistance Program
- Business Financing Program
- Research and Innovation Activities Program
- Export Assistance Program
- Energy Technologies Development Program
- Transportation Research and Development Assistance Program

III. Program Previously Determined To Be Terminated

- Exemption from Payment of Water Bills

In the last administrative reviews, covering calendar year 1997, the Department found that this program was terminated during the POR. In our final results, we stated that we, therefore, did not intend to continue to examine this

program in the future (*see Pure Magnesium and Alloy Magnesium from Canada: Final Results of Countervailing Duty Administrative Reviews,* 64 FR 48805, 48806 (September 8, 1999)).

Preliminary Results of Reviews

In accordance with 19 CFR 351.221(b)(4)(i), we calculated a subsidy rate for NHCI, the sole producer/exporter subject to these administrative reviews. For the period January 1, 1998, through December 31, 1998, we preliminarily determine the net subsidy rate for NHCI to be 1.38 percent ad valorem. We will disclose our calculations to the interested parties upon request pursuant to section 351.224(b) of the regulations.

If the final results of these reviews remain the same as these preliminary results, the Department intends to instruct the Customs Service (''Customs'') to assess countervailing duties at the net subsidy rate. The Department also intends to instruct Customs to collect cash deposits of estimated countervailing duties at the rate of 1.38 percent on the f.o.b. value of all shipments of the subject merchandise from NHCI entered, or withdrawn from warehouse, for consumption on or after the date of publication of the final results of these administrative reviews.

Because the URAA replaced the general rule in favor of a country-wide rate with a general rule in favor of individual rates for investigated and reviewed companies, the procedures for establishing countervailing duty rates, including those for non-reviewed companies, are now essentially the same as those in antidumping cases, except as provided for in section 777A(e)(2)(B) of the Act. The requested reviews will normally cover only those companies specifically named. *See* 19 CFR 351.213(b)(2). Pursuant to 19 CFR 351.212(c), for all companies for which a review was *not* requested, duties must be assessed at the cash deposit rate, and cash deposits must continue to be collected, at the rate previously ordered. As such, the countervailing duty cash deposit rate applicable to a company can no longer change, except pursuant to a request for a review of that company. *See Federal-Mogul Corporation and The Torrington Company* v. *United States,* 822 F. Supp. 782 (CIT 1993) and *Floral Trade Council* v. *United States,* 822 F. Supp. 766 (CIT 1993) (interpreting 19 CFR 353.22(e), the antidumping regulation on automatic assessment, which is identical to 19 CFR 355.22(g), the predecessor to 19 CFR 351.212(c)). Therefore, the cash deposit rates for all companies except the company covered by these reviews, will be unchanged by the results of these reviews.

We will instruct Customs to continue to collect cash deposits for non-reviewed companies, (except Timminco Limited which was excluded from the orders during the investigations) at the most recent company-specific or country-wide rate applicable to the company. Accordingly, the cash deposit rate that will be applied to non-reviewed companies covered by these orders is that established in *Pure and Alloy Magnesium From Canada; Final Results of the Second (1993) Countervailing Duty Administrative Reviews,* 62 FR 48607 (September 16, 1997) or the company-specific rate published in the most recent final results of an administrative review in which a company participated. These rates shall apply to all non-reviewed companies until a review of a company assigned these rates is requested. In addition, for the period January 1, 1998, through December 31, 1998, the assessment rates applicable to all non-reviewed companies covered by these orders are the cash deposit rates in effect at the time of entry, except for Timminco Limited which was excluded from the orders in the original investigations.

Public Comment

Interested parties may request a hearing within 30 days of the date of publication of this notice. Any hearing, if requested, will be held two days after the scheduled date for submission of rebuttal briefs (*see* below). Interested parties may submit written arguments in case briefs within 30 days of the date of publication of this notice. Rebuttal briefs, limited to issues raised in case briefs, may be filed no later than five days after the date of filing the case briefs. Parties who submit briefs in these proceedings should provide a summary of the arguments not to exceed five pages and a table of statutes, regulations, and cases cited. Copies of case briefs and rebuttal briefs must be served on interested parties in accordance with 19 CFR 351.303(f).

Representatives of parties to the proceeding may request disclosure of proprietary information under administrative protective order no later than 10 days after the representative's client or employer becomes a party to the proceeding, but in no event later than the date the case briefs, under 19 CFR 351.309(c)(1)(ii), are due.

The Department will publish a notice of the final results of these administrative reviews within 120 days from the publication of these preliminary results.

These administrative reviews and notice are in accordance with sections 751(a)(1) and 777(i)(1) of the Act.

Dated: April 28, 2000.

Troy H. Cribb,

Acting Assistant Secretary for Import Administration.

[FR Doc. 00–11173 Filed 5–3–00; 8:45 am]

BILLING CODE 3510–DS–P

DEPARTMENT OF COMMERCE

National Oceanic and Atmospheric Administration

[I.D. 042700A]

Marine Mammals; File No. 782–1438 and P77–4#2

AGENCY: National Marine Fisheries Service (NMFS), National Oceanic and Atmospheric Administration (NOAA), Commerce.

ACTION: Receipt of applications for amendment.

SUMMARY: Notice is hereby given that National Marine Mammal Laboratory, National Marine Fisheries Service, NOAA, 7600 Sand Point Way NE, Seattle, Washington 98115–0070; and Northeast Fisheries Science Center, National Marine Fisheries Service, NOAA, 166 Water Street, Woods Hole, MA 02546–1026, have requested an amendment to scientific research Permit No. 782–1438 and 917, respectively.

DATES: Written or telefaxed comments must be received on or before June 5, 2000.

ADDRESSES: The amendment requests and related documents are available for review upon written request or by appointment in the following offices:

File Nos. 782–1438 and P77–4#2: Permits and Documentation Division, Office of Protected Resources, NMFS, 1315 East-West Highway, Room 13705, Silver Spring, MD 20910 (301/713–2289);

File No. 782–1438: Southwest Region, National Marine Fisheries Service, NOAA, 501 West Ocean Boulevard, Suite 4200, Long Beach, CA 90802–4213 (562/980–4001);

File No. 782–1438: Alaska Region, National Marine Fisheries Service, NOAA, P.O. Box 21668, Juneau, AK 99802 (907/586–7235);

File No. P77–4#2 (Permit No. 917): Northeast Region, NMFS, One Blackburn Drive, Gloucester, MA 01930, (978/281–9250).

Written comments or requests for a public hearing on these requests should

be submitted to the Chief, Permits and Documentation Division, F/PR1, Office of Protected Resources, NMFS, 1315 East-West Highway, Room 13130, Silver Spring, MD 20910. Those individuals requesting a hearing should set forth the specific reasons why a hearing on these particular amendment requests would be appropriate.

Comments may also be submitted by facsimile at (301) 713–0376, provided the facsimile is confirmed by hard copy submitted by mail and postmarked no later than the closing date of the comment period. Please note that comments will not be accepted by e-mail or other electronic media.

FOR FURTHER INFORMATION CONTACT: Ruth Johnson or Simona Roberts, 301/713–2289.

SUPPLEMENTARY INFORMATION: The subject amendment to Permit No. 782–1438 issued on May 8, 1998 (63 FR 27265) and 917 issued on May 11, 1994 (59 FR 25892), as amended April 16, 1999 (64 FR 6326), and is requested under the authority of the Marine Mammal Protection Act of 1972, as amended (16 U.S.C. 1361 *et seq.*), the Regulations Governing the Taking and Importing of Marine Mammals (50 CFR part 216), the Endangered Species Act of 1973, as amended (16 U.S.C. 1531 *et seq.*) and the regulations governing the taking, importing, and exporting of endangered and threatened species (50 CFR 222–226).

Permit No. 782–1438 authorizes the permit holder to take large and small cetaceans and incidentally harass some pinniped species during aerial surveys.

The permit holder requests authorization to amend this permit to satellite-tag, flipper tag, VHF radio/time depth recorder (TDR) suction cup-tag and biopsy sample beluga whales (*Delphinapterus leucas*) in Alaskan waters. Specifically, they request authority to satellite tag and flipper tag a maximum of 40 beluga whales in the Gulf of Alaska, Bristol Bay, Norton Sound, Kotzebue Sound, and Beaufort Sea; VHF/TDR suction cup tag a maximum of 30 beluga whales in the Gulf of Alaska; and biopsy sample a maximum of 90 beluga whales in the Gulf of Alaska, Bristol Bay, Norton Sound, Kotzebue Sound, and Beaufort Sea.

Permit No. 917 (File No. P77–4#2) authorizes three projects: (1) Aerial and boat surveys, biopsy sampling and photo-identification of various cetacean species during stock assessment research; (2) capture, sample, tag and release pinnipeds during pinniped stock assessment research; and (3) collection of samples from animals of the Orders Cetacea and Pinnipedia [except walrus] for deposit into a scientific collection for research.

The NMFS, Northeast Fisheries Science Center is requesting authority to extend the permit to December 31, 2000. No additional animals are requested or will be authorized.

In compliance with the National Environmental Policy Act of 1969 (42 U.S.C. 4321 *et seq.*), an initial determination has been made that the activity proposed is categorically excluded from the requirement to prepare an environmental assessment or environmental impact statement.

Concurrent with the publication of this notice in the **Federal Register**, NMFS is forwarding copies of this application to the Marine Mammal Commission and its Committee of Scientific Advisors.

Dated: April 28, 2000.

Ann Terbush,

Chief, Permits and Documentation Division, Office of Protected Resources, National Marine Fisheries Service.

[FR Doc. 00–11184 Filed 5–3–00; 8:45 am]

BILLING CODE 3510–22–F

DEPARTMENT OF DEFENSE

Department of the Air Force

Public meeting With the Community College of the Air Force Board of Visitors to Review and Discuss Academic Policies and Issues Relative to the Operation of the College

AGENCY: Community College of the Air Force; DoD.

ACTION: Notice of meeting.

SUMMARY: The Community College of the Air Force (CCAF) Board of Visitors will hold a meeting to review and discuss academic policies and issues relative to the operation of the college. Agenda items include a review of the operations of the CCAF and an update on the activities of the CCAF Policy Council.

Members of the public who wish to make oral or written statements at the meeting should contact First Lieutenant Matthew M. Groleau, Designated Federal Officer for the Board, at the address below no later than 4:00 p.m. on May 30, 2000. Please mail or electronically mail all requests. Telephone requests will not be honored. The request should identify the name of the individual who will make the presentation and an outline of the issues to be addressed. A minimum of 35 copies of the presentation materials must be given to First Lieutenant Groleau no later than three days prior to the time of the board meeting for distribution. Visual aids must be submitted to First Lieutenant Groleau on a 3½ inch computer disc in Microsoft PowerPoint format no later than 4:00 p.m. on May 30, 2000 to allow sufficient time for virus scanning and formatting of the slides.

DATES: The meeting will be held on Tuesday, June 6, 2000 at 8:00 a.m. on the Main Floor Conference Room, Air University, Building 800, 130 West Maxwell Boulevard, Maxwell Air Force Base, Alabama 36112.

FOR FURTHER INFORMATION CONTACT: First Lieutenant Matthew M. Groleau, (334) 953–7322, Community College of the Air Force, 130 West Maxwell Boulevard, Maxwell Air Force Base, Alabama, 36112–6613, or through electronic mail at matthew.groleau@maxwell.af.mil.

Janet A. Long,

Air Force Federal Register Liaison Officer.

[FR Doc. 00–11133 Filed 5–3–00; 8:45 am]

BILLING CODE 5001–05–P

DEPARTMENT OF EDUCATION

Submission for OMB Review; Comment Request

AGENCY: Department of Education.

SUMMARY: The Leader, Information Management Group, Office of the Chief Information Officer invites comments on the submission for OMB review as required by the Paperwork Reduction Act of 1995.

DATES: Interested persons are invited to submit comments on or before June 5, 2000.

ADDRESSES: Written comments should be addressed to the Office of Information and Regulatory Affairs, Attention: Danny Werfel, Desk Officer, Department of Education, Office of Management and Budget, 725 17th Street, NW, Room 10235, New Executive Office Building, Washington, DC 20503 or should be electronically mailed to the internet address DWERFEL@OMB.EOP.GOV.

SUPPLEMENTARY INFORMATION: Section 3506 of the Paperwork Reduction Act of 1995 (44 U.S.C. Chapter 35) requires that the Office of Management and Budget (OMB) provide interested Federal agencies and the public an early opportunity to comment on information collection requests. OMB may amend or waive the requirement for public consultation to the extent that public participation in the approval process would defeat the purpose of the information collection, violate State or

Federal law, or substantially interfere with any agency's ability to perform its statutory obligations. The Leader, Information Management Group, Office of the Chief Information Officer, publishes that notice containing proposed information collection requests prior to submission of these requests to OMB. Each proposed information collection, grouped by office, contains the following: (1) Type of review requested, e.g. new, revision, extension, existing or reinstatement; (2) Title; (3) Summary of the collection; (4) Description of the need for, and proposed use of, the information; (5) Respondents and frequency of collection; and (6) Reporting and/or Recordkeeping burden. OMB invites public comment.

Dated: April 28, 2000.

William Burrow,

Leader, Information Management Group, Office of the Chief Information Officer.

Office of Postsecondary Education

Type of Review: Reinstatement.

Title: Application for Grants under Student Support Services Program.

Frequency: Biennially.

Affected Public: Not-for-profit institutions.

Reporting and Recordkeeping Hour Burden:

Responses: 1,200

Burden Hours: 40,800.

Abstract: Information requested from eligible institutions of higher education is needed to provide department program officers with necessary information to make funding decisions to determine compliance with authorizing legislation and program regulations.

This information collection is being submitted under the Streamlined Clearance Process for Discretionary Grant Information Collections (1890–0001). Therefore, the 30-day public comment period notice will be the only public comment notice published for this information collection.

Requests for copies of the proposed information collection request may be accessed from *http://edicsweb.ed.gov,* or should be addressed to Vivian Reese, Department of Education, 400 Maryland Avenue, SW, Room 5624, Regional Office Building 3, Washington, DC 20202–4651. Requests may also be electronically mailed to the internet address OCIO__IMG__Issues@ed.gov or faxed to 202–708–9346. Please specify the complete title of the information collection when making your request. Comments regarding burden and/or the collection activity requirements should be directed to Jacqueline Montague at (202) 708–5359 or via her internet address Jackie__Montague@ed.gov. Individuals who use a telecommunications device for the deaf (TDD) may call the Federal Information Relay Service (FIRS) at 1–800–877–8339.

[FR Doc. 00–11082 Filed 5–3–00; 8:45 am]

BILLING CODE 4000–01–P

DEPARTMENT OF ENERGY

Federal Energy Regulatory Commission

[Docket No. CP00–196–000]

Transcontinental Gas Pipe Line Corporation; Notice of Application

April 28, 2000.

Take notice that on April 19, 2000, Transcontinental Gas Pipe Line Corporation (Transco), Post Office Box 1396, Houston, Texas 77251, filed in Docket No. CP00–196–000 an application pursuant to Section 7(c) of the Natural Gas Act (NGA) for a certificate of public convenience and necessity authorizing Transco to construct and operate certain facilities at Compressor Station No. 90 in Marengo County, Alabama to comply with the Clean Air Act Amendments of 1990, all as more fully set forth in the application which is on file with the Commission and open to public inspection. This filing may be viewed on the web at http://www.ferc.fed.us/online/rims.htm (call 202–208–2222 for assistance).

Any questions regarding the application should be directed to Alfred E. White, Jr., Senior Attorney, Transcontinental Gas Pipe Corporation, Post Office Box 1396, Houston, Texas 77251 or call (713) 215–2000.

Transco states that the Clean Air Act Amendments of 1990 and state implementation plans pursuant thereto require certain reductions of NO_X (oxides of nitrogen) air emissions at certain of Transco's compressor stations. Accordingly, over the next few years Transco plans to install certain facilities at these stations to achieve the reductions of NO_X. Transco plans to install these facilities pursuant to Transco's blanket facilities certificate issued in Docket No. CP82–426 when it is authorized to do so (either under automatic or prior notice authorization, depending on the estimated dollar amount). However, at the stations where the estimated total cost of installing these facilities is more than $20.2 million, Transco states that it is not authorized to perform such work pursuant to its blanket facilities certificate and, therefore, is required to file an application for a certificate of public convenience and necessity (such is the case with the instant application).

Transco states that proposes to modify several of its existing reciprocating engines at Compressor Station No. 90 in order to comply with the State of Alabama plan to implement the Clean Air Act Amendments of 1990. Station 90 has 17 units including 15 reciprocating/compressor units, one Solar Centaur gas turbine and one Solar Mars gas turbine driven centrifugal compressor unit. The facilities at Station 90 are located within a fenced area of approximately 58 acres.

Transco states that it plans to install turbochargers and associated equipment on 9 of the 15 reciprocating engines in order to reduce NO_X emissions. These engines currently do not have turbochargers on them. Transco plans to modify the existing turbochargers at the other 6 reciprocating units to increase their capacity and install associated equipment in order to reduce NO_X emissions. At all 15 engines emissions will be reduced by achieving a true lean air-fuel ratio, injecting high pressure fuel directly into the power cylinders and making other engine adjustments. The injection of high pressure fuel directly into the power cylinders significantly improves the combustion process by producing a more homogeneous mixture of air and fuel within the power cylinder. The true lean air-fuel ratio coupled with the high pressure fuel injection works by promoting stable combustion characteristics and thus reduces the formation of NO_X.

Transco states the 9 engines which will have turbochargers installed will have the potential to perform above their current operating horsepower. However, since Station 90 is automated, it is stated that Transco has the ability to shut down other engines or reduce their load to ensure that the station will not operate above the station's total certificated horsepower. Since Transco will install these turbochargers at Station 90 solely to achieve an environmental improvement *i.e.,* lower NO_X emissions, Transco states that it has no intent or need to operate the station above its certificated horsepower. Therefore, when Transco installs these turbochargers at Station 90 Transco states that it will adjust the automation program at the station so that it will not operate above its certificated horsepower.

At the other 6 engines, Transco states that modification of the existing turbochargers to increase their capacity

will not create the potential of these engines performing above their current horsepower because the engines are already operating at maximum horsepower and cannot operate at a higher horsepower output. Accordingly, it is stated that there will be no increase in the capacity of Transco's system in the vicinity of the station as a result of installing the 9 new turbochargers and modifying the 6 existing turbochargers.

Transco states that installation of new turbochargers and modifications to existing ones at Station 90 will require some work to be done outside of the compressor building. All of the proposed work described above will be built within 50 feet of existing station facilities and will be done within the confines of previously disturbed areas. Approximately 0.7 acre of previously disturbed ground will be affected by the proposed project. Restoration of this area will be conducted according to the Commission's Upland Erosion Control, Revegetation, and Maintenance Plan.

Transco estimates that the proposed modifications will cost $24.5 million. Transco states that a state air permit will be negotiated with the Alabama Department of Environmental Management.

Transco states that the construction and operation of the proposed facilities will have no significant impact on the quality of human health or the environment other than the positive impact of reducing NO_X emissions. The proposed facilities will be installed either entirely within existing buildings or within 50 feet of existing station facilities (and within the confines of previously disturbed areas). Transco certifies that the proposed facilities will be designed, constructed, operated and maintained in accordance with all applicable safety standards and plans for maintenance and inspection.

Any person desiring to participate in the hearing process or to make any protest with reference to said application should on or before May 19, 2000, file with the Federal Energy Regulatory Commission, 888 First Street, N.E., Washington, D.C. 20426, a motion to intervene or a protest in accordance with the requirements of the Commission's Rules of Practice and Procedure (18 CFR 385.214 or 385.211) and the Regulations under the Natural Gas Act (18 CFR 157.10). All protests filed with the Commission will be considered by it in determining the appropriate action to taken but will not serve to make the protestants parties to the proceeding. The Commission's rules require that protestors provide copies of their protests to the party or parties directory involved. Any person wishing to become a party to a proceeding or the participate as a party in any hearing therein must file a motion to intervene in accordance with Commission's Rules.

A person obtaining intervenor status will be placed on the service list maintained by the Secretary of the Commission and will receive copies of all documents filed by the applicant and by every one of the intervenors. An intervenor can file for rehearing of any Commission order and can petition for court review of any such order. However, an intervenor must submit copies of comments or any other filing it makes with the Commission to every other intervenor in the proceeding, as well as 14 copies with the Commission.

A person does not have to intervene, however, in order to have comments considered. A person, instead, may submit two copies of comments to the Secretary of the Commission. Commenters will be placed on the Commission's environmental mailing list, will receive copies of environmental documents and will be able to participate in meetings associated with the Commission's environmental review process. Commenters will not be required to serve copies of filed documents on all other parties. However, commenters will not receive copies of all documents filed by other parties or issued by the Commission and will not have the right to seek rehearing or appeal the Commission's final order to a federal court.

The Commission will consider all comments and concerns equally, whether filed by commenters or those requesting intervenor status.

Take further notice that, pursuant to the authority contained in and subject to the jurisdiction conferred upon the Federal Energy Regulatory Commission by Sections 7 and 15 of the Natural Gas Act and the Commission's Rules of Practice and Procedure, a hearing will be held without further notice before the Commission or its designee on this application if not motion to intervene is filed within the time required herein, if the Commission on its own review of the matter finds that a grant of the certificate is required by the public convenience and necessity. If a motion for leave to intervene is timely filed, or if the Commission on its own motion believes that a formal hearing is required, further notice of such hearing will be duly given.

Under the procedure provided for, unless otherwise advised, it will be unnecessary for Transco to appear or be represented at the hearing.

Linwood A. Watson, Jr.,

Acting Secretary.

[FR Doc. 00–11076 Filed 5–3–00; 8:45 am]

BILLING CODE 6717–01–M

DEPARTMENT OF ENERGY

Federal Energy Regulatory Commission

[Docket No. EC00–46–000]

Vermont Yankee Nuclear Power Corporation, AmerGen Vermont, L.L.C., Vermont Electric Power Company, Inc.; Notice of Filing

April 28, 2000.

Take notice that on February 10, 2000, Vermont Yankee Nuclear Power Corporation, AmerGen Vermont, L.L.C., and Vermont Electric Power Company, Inc., tendered for filing and Amendment No. 1 to Purchase and Sale Agreement dated December 21, 1999.

Any person desiring to be heard or to protest such filing should file a motion to intervene or protest with the Federal Energy Regulatory Commission, 888 First Street, NE, Washington, DC 20426, in accordance with Rules 211 and 214 of the Commission's Rules of Practice and Procedure (18 CFR 385.211 and 385.214). All such motions and protests should be filed on or before May 8, 2000. Protests will be considered by the Commission to determine the appropriate action to be taken, but will not serve to make protestants parties to the proceedings. Any person wishing to become a party must file a motion to intervene. Copies of this filing are on file with the Commission and are available for public inspection. This filing may also be viewed on the Internet at http://www.ferc.fed.us/online/rims.htm (call 202–208–2222 for assistance).

Linwood A. Watson, Jr.,

Acting Secretary.

[FR Doc. 00–11124 Filed 5–3–00; 8:45 am]

BILLING CODE 6717–01–M

DEPARTMENT OF ENERGY

Federal Energy Regulatory Commission

[Docket No. EC00–80–000, et al.]

Portland General Electric Company, et al.; Electric Rate and Corporate Regulation Filings

April 27, 2000.

Take notice that the following filings have been made with the Commission:

1. Portland General Electric Company

[Docket No. EC00–80–000]

Take notice that on April 20, 2000, Portland General Electric Company (PGE) filed an application pursuant to Section 203 of the Federal Power Act for authority to sell certain jurisdictional transmission facilities, as more fully set forth in the application, to The Confederated Tribes of the Warm Springs Reservation of Oregon.

A copy of this application has been served upon the Oregon Public Utility Commission.

Comment date: May 22, 2000, in accordance with Standard Paragraph E at the end of this notice.

2. Millennium Power Partners, L.P.

[Docket No. EC00–82–000]

Take notice that on April 24, 2000, Millennium Power Partners, L.P., on behalf of Peach III Power Corporation, Black Hawk II Power Corporation and East Syracuse Generating Company, tendered for filing pursuant an application for approval pursuant to Section 203 of the Federal Power Act, 16 U.S.C. 824b (1994), and Part 33 of the Commission's regulations (18 CFR part 33), for an intra-corporate restructuring.

Comment date: May 24, 2000, in accordance with Standard Paragraph E at the end of this notice.

Standard Paragraphs

E. Any person desiring to be heard or to protest such filing should file a motion to intervene or protest with the Federal Energy Regulatory Commission, 888 First Street, NE, Washington, DC 20426, in accordance with Rules 211 and 214 of the Commission's Rules of Practice and Procedure (18 CFR 385.211 and 385.214). All such motions or protests should be filed on or before the comment date. Protests will be considered by the Commission in determining the appropriate action to be taken, but will not serve to make protestants parties to the proceeding. Any person wishing to become a party must file a motion to intervene. Copies of these filings are on file with the Commission and are available for public inspection. This filing may also be viewed on the Internet at http://www.ferc.fed.us/online/rims.htm (call 202–208–2222 for assistance).

Linwood A. Watson, Jr.,

Acting Secretary.

[FR Doc. 00–11073 Filed 5–3–00; 8:45 am]

BILLING CODE 6717–01–P

DEPARTMENT OF ENERGY

Federal Energy Regulatory Commission

[Docket No. EC00–83–000, et al.]

The Potomac Edison Company, et al.; Electric Rate and Corporate Regulation Filings

April 28, 2000.

Take notice that the following filings have been made with the Commission:

1. The Potomac Edison Company, Allegheny Energy Supply Company, L.L.C., PE Transferring Agent, L.L.C. and [To be named], L.L.C.

[Docket No. EC00–83–000]

Take notice that on April 26, 2000, the Potomac Edison Company (Potomac), Allegheny Energy Supply Company, L.L.C. (AE Supply), PE Transferring Agent, L.L.C., and [To be named], L.L.C. (collectively, Applicants), filed a joint application under Section 203 of the Federal Power Act for the disposition of jurisdictional facilities. Applicants request Commission approval of the following intra-corporate transfers of jurisdictional assets: (1) The shares of jurisdictional step-up transformers allocable to Potomac's Maryland, West Virginia and Virginia service areas (excluding Potomac's Virginia hydroelectric assets); (2) securities evidencing Potomac's ownership share of Allegheny Generating Company; (3) certain wholesale power purchase and supply agreements, including those jurisdictional agreements Potomac may enter into between the date of the Application and the date of proposed corporate reorganization; and (4) Potomac's pollution control and solid waste bonds associated with the transferred generating assets.

Comment date: May 26, 2000, in accordance with Standard Paragraph E at the end of this notice.

2. Central Vermont Public Service Corporation

[Docket No. OA97–508–001]

Take notice that on April 25, 2000, Central Vermont Public Service Corporation (Central Vermont), tendered for filing in compliance with the Commission's February 29, 2000 Order in Docket No. OA97–508–000.

Comment date: May 16, 2000, in accordance with Standard Paragraph E at the end of this notice.

3. Virginia Electric and Power Company

[Docket Nos. ER00–1721–000 and ER00–1737–000]

Take notice that on April 25, 2000, Virginia Electric and Power Company agreed to a one-month deferral (from May 1, 2000 to June 1, 2000) of the proposed effective date for the submittals in the above dockets in order to provide additional time for the Commission to review and take action on the filings.

Copies of the filing were served on all persons designated on the official service lists in these dockets.

Comment date: May 16, 2000, in accordance with Standard Paragraph E at the end of this notice.

4. Southern Minnesota Municipal Power Agency

[Docket No. NJ00–3–000]

Take notice that on April 25, 2000, Southern Minnesota Municipal Power Agency tendered for filing modifications to its non-jurisdictional tariff previously filed under Docket Number NJ97–12–000, reflecting changes to Schedules 1 and 4.

Comment date: May 30, 2000, in accordance with Standard Paragraph E at the end of this notice.

5. Central Vermont Public Service Corporation

[Docket No. OA97–706–001]

Take notice that on April 25, 2000, Central Vermont Public Service Corporation (Central Vermont), tendered for filing in compliance with the Commission's February 29, 2000 Order in Docket No. OA97–706–000.

Comment date: May 16, 2000, in accordance with Standard Paragraph E at the end of this notice.

6. Allegheny Energy Service Corporation on behalf of Allegheny Energy Supply Company, LLC

[Docket No. ER00–1987–001]

Take notice that on April 25, 2000, Allegheny Energy Service Corporation on behalf of Allegheny Supply Company, LLC (Allegheny Energy Supply), tendered Amendment No. 1 to Supplement No. 32 to the Market Rate Tariff to incorporate a Netting Agreement with CMS Marketing Services and Trading Company into the tariff provisions.

Allegheny Energy Supply requests a waiver of notice requirements to make the Amendment effective as of March 1, 2000 or such other date as ordered by the Commission.

Copies of the filing have been provided to the Public Utilities Commission on Ohio, the Pennsylvania Public Utility Commission, the Maryland Public Service Commission, the Virginia State Corporation Commission, the West Virginia Public Service Commission and all parties of record.

Comment date: May 16, 2000, in accordance with Standard Paragraph E at the end of this notice.

7. Virginia Electric and Power Company

[Docket No. ER00–2273–000]

Take notice that on April 25, 2000, Virginia Electric and Power Company (Virginia Power), tendered for filing the Service Agreement for Firm Point-to-Point Transmission Service by Virginia Electric and Power Company to MIECO, Inc., and the Service Agreement for Non-Firm Point-to-Point Transmission Service by Virginia Electric and Power Company to MIECO, Inc.

The foregoing Service Agreements are tendered for filing under the Open Access Transmission Tariff to Eligible Purchasers dated July 14, 1997. Under the tendered Service Agreements, Virginia Power will provide point-to-point service to the Transmission Customer under the rates, terms and conditions of the Open Access Transmission Tariff.

Virginia Power requests an effective date of April 25, 2000, the date of filing of the Service Agreements.

Copies of the filing were served upon MIECO, Inc., the Virginia State Corporation Commission and the North Carolina Utilities Commission.

Comment date: May 16, 2000, in accordance with Standard Paragraph E at the end of this notice.

8. California Independent System Operator Corporation

[Docket No. ER00–2274–000]

Take notice that on April 24, 2000, the California Independent System Operator Corporation (ISO), tendered for filing an agreement entitled ''Reliability Must-Run Settlement Agreement Among California ISO, Northern California Power Agency and Pacific Gas and Electric Company'' as well as certain additional agreements appended to and incorporated in the Agreement.

The ISO states that this filing has been served upon the Public Utilities Commission of California, the California Electricity Oversight Board, Pacific Gas and Electric Company and Northern California Power Agency.

Comment date: May 15, 2000, in accordance with Standard Paragraph E at the end of this notice.

9. Virginia Electric and Power Company

[Docket No. ER00–2275–000]

Take notice that on April 25, 2000, Virginia Electric and Power Company (Virginia Power), tendered for filing Notice of Termination for the Service Agreement for Non-Firm Point-To-Point Transmission Service dated January 21, 1997 and originally approved by the FERC in a letter order on April 17, 1997 in Docket No. ER97–1937–000 and subsequently assigned to IPMI, successor to Illinois Power Company, in a letter order dated November 16, 1999 in Docket No. ER00–95–000.

Virginia Power respectfully requests a retroactive effective date of the termination of March 31, 2000, as requested by Dynegy Power Marketing, Inc. (DYPM), successor to IPMI.

Copies of the filing were served upon DYPM, the Virginia State Corporation Commission and the North Carolina Utilities Commission.

Comment date: May 16, 2000, in accordance with Standard Paragraph E at the end of this notice.

10. Virginia Electric and Power Company

[Docket No. ER00–2276–000]

Take notice that on April 25, 2000, Virginia Electric and Power Company (Virginia Power), tendered for filing Notice of Termination for the Service Agreement between Illinova Power Marketing, Inc. (IPMI) and Virginia Power for Firm Point-To-Point Transmission Service dated October 7, 1999 and approved by the FERC in a letter order on December 29, 1999 under Docket No. ER00–0552–000.

Virginia Power respectfully requests an effective date of the termination of April 30, 2000, as requested by Dynegy Power Marketing, Inc. (DYPM), successor to IPMI.

Copies of the filing were served upon DYPM, the Virginia State Corporation Commission and the North Carolina Utilities Commission.

Comment date: May 16, 2000, in accordance with Standard Paragraph E at the end of this notice.

11. Wisconsin Power & Light Company

[Docket No. ER00–2277–000]

Take notice that on April 25, 2000, Wisconsin Power & Light Company (WPL), tendered for filing an Amendment to Service Agreement No. 2 under FERC Electric Tariff, Original Volume No. 11.

WPL indicates that copies of the filing have been provided to the customer and to the Public Service Commission of Wisconsin.

Comment date: May 16, 2000, in accordance with Standard Paragraph E at the end of this notice.

12. Pacific Gas and Electric Company

[Docket No. ER00–2278–000]

Take notice that on April 25, 2000, Pacific Gas and Electric Company (PG&E), tendered for filing Notice of Termination of the ''Economy Energy Agreement'' between PG&E and the Public Service Company of New Mexico, PG&E Rate Schedule FERC No. 101.

PG&E has requested a waiver allowing an April 14, 2000, effective termination date.

Copies of this filing have been served upon Public Service Company of New Mexico and the California Public Utilities Commission.

Comment date: May 16, 2000, in accordance with Standard Paragraph E at the end of this notice.

13. South Carolina Electric & Gas Company

[Docket No. ER00–2279–000]

Take notice that on April 25, 2000, South Carolina Electric & Gas Company (SCE&G), tendered for filing a service agreement establishing The Legacy Energy Group, LLC as a firm point-to-point customer under the terms of SCE&G's Open Access Transmission Tariff.

SCE&G requests an effective date of one day subsequent to the filing of the service agreement. Accordingly, SCE&G requests waiver of the Commission's notice requirements.

Copies of this filing were served upon The Legacy Energy Group, LLC and the South Carolina Public Service Commission.

Comment date: May 16, 2000, in accordance with Standard Paragraph E at the end of this notice.

14. South Carolina Electric & Gas Company

[Docket No. ER00–2280–000]

Take notice that on April 25, 2000, South Carolina Electric & Gas Company (SCE&G), tendered for filing a service agreement establishing The Legacy Energy Group, LLC as a non-firm point-to-point customer under the terms of SCE&G's Open Access Transmission Tariff.

SCE&G requests an effective date of one day subsequent to the filing of the

service agreement. Accordingly, SCE&G requests waiver of the Commission's notice requirements.

Copies of this filing were served upon The Legacy Energy Group, LLC and the South Carolina Public Service Commission.

Comment date: May 16, 2000, in accordance with Standard Paragraph E at the end of this notice.

15. South Carolina Electric & Gas Company

[Docket No. ER00–2281–000]

Take notice that on April 25, 2000, South Carolina Electric & Gas Company (SCE&G), tendered for filing a service agreement establishing The Legacy Energy Group, LLC as a customer under the terms of SCE&G's Negotiated Market Sales Tariff.

SCE&G requests an effective date of one day subsequent to the date of filing. Accordingly, SCE&G requests waiver of the Commission's notice requirements.

Copies of this filing were served upon The Legacy Energy Group, LLC and the South Carolina Public Service Commission.

Comment date: May 16, 2000, in accordance with Standard Paragraph E at the end of this notice.

16. Central Illinois Light Company

[Docket No. ER00–2282–000]

Take notice that on April 25, 2000, Central Illinois Light Company (CILCO), 300 Liberty Street, Peoria, Illinois 61602, tendered for filing with the Commission a substitute Index of Point-To-Point Transmission Service Customers under its Open Access Transmission Tariff and service agreements for two new customer, El Paso Merchant Energy, L.P., and Amerada Hess Corporation.

CILCO requested an effective date of April 14, 2000 for the service agreements.

Copies of the filing were served on the affected customers and the Illinois Commerce Commission.

Comment date: May 16, 2000, in accordance with Standard Paragraph E at the end of this notice.

17. Puget Sound Energy, Inc.

[Docket No. ER00–2283–000]

Take notice that on April 25, 2000, Puget Sound Energy, Inc., as Transmission Provider, tendered for filing a Service Agreement for Firm Point-To-Point Transmission Service and a Service Agreement for Non-Firm Point-To-Point Transmission Service with APS—Bulk Power Marketing (APS), as Transmission Customer.

A copy of the filing was served upon APS.

Comment date: May 16, 2000, in accordance with Standard Paragraph E at the end of this notice.

18. Puget Sound Energy, Inc.

[Docket No. ER00–2284–000]

Take notice that on April 25, 2000, Puget Sound Energy, Inc., as Transmission Provider, tendered for filing a Service Agreement for Firm Point-To-Point Transmission Service and a Service Agreement for Non-Firm Point-To-Point Transmission Service with Citizens Power Sales LLC (Citizens), as Transmission Customer.

A copy of the filing was served upon Citizens.

Comment date: May 16, 2000, in accordance with Standard Paragraph E at the end of this notice.

19. Puget Sound Energy, Inc.

[Docket No. ER00–2285–000]

Take notice that on April 25, 2000, Puget Sound Energy, Inc., as Transmission Provider, tendered for filing a Service Agreement for Firm Point-To-Point Transmission Service and a Service Agreement for Non-Firm Point-To-Point Transmission Service with Idaho Power Company (Idaho Power), as Transmission Customer.

A copy of the filing was served upon Idaho Power.

Comment date: May 16, 2000, in accordance with Standard Paragraph E at the end of this notice.

20. Puget Sound Energy, Inc.

[Docket No. ER00–2286–000]

Take notice that on April 26, 2000, Puget Sound Energy, Inc., as Transmission Provider, tendered for filing a Service Agreement for Firm Point-To-Point Transmission Service and a Service Agreement for Non-Firm Point-To-Point Transmission Service with Western Power Services (WPS), as Transmission Customer.

A copy of the filing was served upon WPS.

Comment date: May 16, 2000, in accordance with Standard Paragraph E at the end of this notice.

21. Puget Sound Energy, Inc.

[Docket No. ER00–2287–000]

Take notice that on April 25, 2000, Puget Sound Energy, Inc., as Transmission Provider, tendered for filing a Service Agreement for Firm Point-To-Point Transmission Service and a Service Agreement for Non-Firm Point-To-Point Transmission Service with Southern Company Energy and Marketing, Inc. (Southern), as Transmission Customer.

A copy of the filing was served upon Southern.

Comment date: May 16, 2000, in accordance with Standard Paragraph E at the end of this notice.

22. Puget Sound Energy, Inc.

[Docket No. ER00–2288–000]

Take notice that on April 25, 2000, Puget Sound Energy, Inc., as Transmission Provider, tendered for filing a Service Agreement for Firm Point-To-Point Transmission Service and a Service Agreement for Non-Firm Point-To-Point Transmission Service with Valero Power Services Co. (Valero), as Transmission Customer.

A copy of the filing was served upon Valero.

Comment date: May 16, 2000, in accordance with Standard Paragraph E at the end of this notice.

23. Puget Sound Energy, Inc.

[Docket No. ER00–2289–000]

Take notice that on April 25, 2000, Puget Sound Energy, Inc., as Transmission Provider, tendered for filing a Service Agreement for Firm Point-To-Point Transmission Service) and a Service Agreement for Non-Firm Point-To-Point Transmission Service with MP Energy as Transmission Customer.

A copy of the filing was served upon MP Energy.

Comment date: May 16, 2000, in accordance with Standard Paragraph E at the end of this notice.

24. Puget Sound Energy, Inc.

[Docket No. ER00–2290–000]

Take notice that on April 25, 2000, Puget Sound Energy, Inc., as Transmission Provider, tendered for filing a Service Agreement for Firm Point-To-Point Transmission Service and a Service Agreement for Non-Firm Point-To-Point Transmission Service with Bonneville Power Administration (BPA), as Transmission Customer.

A copy of the filing was served upon BPA.

Comment date: May 16, 2000, in accordance with Standard Paragraph E at the end of this notice.

25. Puget Sound Energy, Inc.

[Docket No. ER00–2291–000]

Take notice that on April 25, 2000, Puget Sound Energy, Inc., as Transmission Provider, tendered for filing a Service Agreement for Firm Point-To-Point Transmission Service and a Service Agreement for Non-Firm Point-To-Point Transmission Service with British Columbia Power Exchange Corporation (Powerex), as Transmission Customer.

A copy of the filing was served upon Powerex.

Comment date: May 16, 2000, in accordance with Standard Paragraph E at the end of this notice.

26. California Independent System Operator Corporation

[Docket No. ER00–2292–000]

Take notice that on April 25, 2000, the California Independent System Operator Corporation, tendered for filing an Interconnected Control Area Operating Agreement between the ISO and Nevada Power Company for acceptance by the Commission.

The ISO states that this filing has been served on Nevada Power Company, the Nevada Public Service Commission, and the California Public Utilities Commission.

The ISO is requesting waiver of the 60-day notice requirement to allow the Interconnected Control Area Operating Agreement to be made effective as of March 21, 2000.

Comment date: May 16, 2000, in accordance with Standard Paragraph E at the end of this notice.

27. Entergy Services, Inc.

[Docket No. ER00–2293–000]

Take notice that on April 25, 2000, Entergy Services, Inc., on behalf of Entergy Gulf States, Inc., tendered for filing a Generator Imbalance Agreement with Calcasieu Power, LLC.

Comment date: May 16, 2000, in accordance with Standard Paragraph E at the end of this notice.

28. PJM Interconnection, L.L.C.

[Docket No. ER00–2294–000]

Take notice that on April 25, 2000, PJM Interconnection, L.L.C. (PJM), tendered for filing signature pages to the Reliability Assurance Agreement among Load Serving Entities in the PJM Control Area (RAA) for BGE Home Products & Services, Inc. (BGE), Conectiv Energy Supply, Inc. (Conectiv), and Smart Energy.com, Inc. (Smart Energy), and an amended Schedule 17 listing the parties to the RAA.

PJM states that it served a copy of its filing on all parties to the RAA, including BGE, Conectiv, and Smart Energy, and each of the state electric regulatory commissions within the PJM Control Area.

Comment date: May 16, 2000, in accordance with Standard Paragraph E at the end of this notice.

29. Wisconsin Public Service Corporation

[Docket No. ER00–2295–000]

Take notice that on April 25, 2000, Wisconsin Public Service Corporation (WPSC), tendered for filing an amendment to FERC Electric Tariff No. 10, its market-based rates sales tariff (MR Tariff). WPSC filed this amendment to enable it to make sales of the following ancillary services under the MR Tariff: Regulation and Frequency Response Service, Operating Reserves—Spinning Reserve Service and Operating Reserves—Supplemental Reserve Service.

Copies of the filing were served upon the public utility's customers under the MR Tariff, the Public Service Commission of Wisconsin and the Michigan Public Service Commission.

Comment date: May 16, 2000, in accordance with Standard Paragraph E at the end of this notice.

Standard Paragraphs

E. Any person desiring to be heard or to protest such filing should file a motion to intervene or protest with the Federal Energy Regulatory Commission, 888 First Street, NE, Washington, DC 20426, in accordance with Rules 211 and 214 of the Commission's Rules of Practice and Procedure (18 CFR 385.211 and 385.214). All such motions or protests should be filed on or before the comment date. Protests will be considered by the Commission in determining the appropriate action to be taken, but will not serve to make protestants parties to the proceeding. Any person wishing to become a party must file a motion to intervene. Copies of these filings are on file with the Commission and are available for public inspection. This filing may also be viewed on the Internet at http://www.ferc.fed.us/online/rims.htm (call 202–208–2222 for assistance).

David P. Boergers,

Secretary.

[FR Doc. 00–11123 Filed 5–3–00; 8:45 am]

BILLING CODE 6717–01–P

DEPARTMENT OF ENERGY

Federal Energy Regulatory Commission

Notice of Application for Amendment of License and Soliciting Comments, Motions To Intervene, and Protests

April 28, 2000.

Take notice that the following hydroelectric application has been filed with the Commission and is available for public inspection:

a. *Application Type:* Amendment of License.

b. *Project No.:* 2203–007.

c. *Date Filed:* April 5, 2000.

d. *Applicant:* Alabama Power Company (APC).

e. *Name of Project:* Holt Lock and Dam Hydroelectric Project.

f. *Location:* The project is located on the Black Warrior River in Tuscaloosa County, Alabama.

g. *Filed Pursuant to:* Federal Power Act, 16 U.S.C. 791(a)–825(r).

h. *Applicant's Contact:* Mr. James R. Schauer, 600 North 18th Street, Birmingham, Alabama, (205) 257–1401.

i. *FERC Contact:* Any questions on this notice should be addressed to Moe Fayyad at (202) 219–2665 or e-mail address *mohamad.fayyad@ferc.fed.us.*

j. *Deadline for filing comments, motions to intervene, or protests:* June 8, 2000.

All documents (original and eight copies) should be filed with: David P. Boergers, Secretary, Federal Energy Regulatory Commission, 888 First Street, N.E., Washington, DC 20426.

Please include the Project Number (2203–007) on any comments, protests, or motions filed.

k. *Description of Amendment:* APC filed an application to replace the 40-megawatt (MW) generating unit with a new, more efficient turbine runner. The existing runner is more than 30 years old and has excessive deterioration. This installation will provide 5 to 6 MW of additional generating capacity and increase the hydraulic capacity from 9,800 cubic feet per second (cfs) to 11,000 cfs.

l. *Locations of the Application:* A copy of the application is available for inspection and reproduction at the Commission's Public Reference Room, located at 888 First Street NE, Room 2A, Washington, DC, 20426, or by calling (202) 208–1371. This filing may be viewed on http://www.ferc.fed.us/online/rims.htm (call (202) 208–2222 for assistance). A copy is also available for inspection and reproduction at the addresses in item h above.

m. Individuals desiring to be included on the Commission's mailing list should so indicate by writing to the Secretary of the Commission.

Comments, Protests, or Motions to Intervene—Anyone may submit comments, a protest, or a motion to intervene in accordance with the requirements of Rules of Practice and Procedure, 18 CFR 385.210, .211, .214. In determining the appropriate action to take, the Commission will consider all protests or other comments filed, but only those who file a motion to intervene in accordance with the Commission's Rules may become a party to the proceeding. Any comments, protests, or motions to intervene must be received on or before the specified comment date for the particular application.

Filing and Service of Responsive Documents—Any filings must bear in all capital letters the title ''COMMENTS'', ''RECOMMENDATIONS FOR TERMS AND CONDITIONS'', ''PROTEST'', or ''MOTION TO INTERVENE'', as applicable, and the Project Number of the particular application to which the filing refers. Any of the above-named documents must be filed by providing the original and the number of copies provided by the Commission's regulations to: The Secretary, Federal Energy Regulatory Commission, 888 First Street, N.E., Washington, D.C. 20426. A copy of any motion to intervene must also be served upon each representative of the Applicant specified in the particular application.

Agency Comments—Federal, state, and local agencies are invited to file comments on the described application. A copy of the application may be obtained by agencies directly from the Applicant. If an agency does not file comments within the time specified for filing comments, it will be presumed to have no comments. One copy of an agency's comments must also be sent to the Applicant's representatives.

Linwood A. Watson, Jr.,

Acting Secretary.

[FR Doc. 00–11074 Filed 5–3–00; 8:45 am]

BILLING CODE 6717–01–M

DEPARTMENT OF ENERGY

Federal Energy Regulatory Commission

Notice of Joint Application for Amendment to License

April 28, 2000.

Take notice that the following hydroelectric application has been filed with the Commission and is available for public inspection:

a. *Application Type:* Request for amendment to license section (C)(2) and articles 59, 64, 65, 66, and 67.

b. *Project No.:* 5–055.

c. *Dated Filed:* April 21, 2000.

d. *Applicants:* PP&L Montana, L.L.C. (PPLM), the Confederated Salish and Kootenai Tribes of the Flathead Reservation (the Tribes), co-licensees, and the U.S. Department of the Interior (Interior).

e. *Name of Project:* Kerr Hydroelectric Project.

f. Location: The Kerr Project is located in Lake and Flathead Counties, Montana and partially on lands within the Flathead Indian Reservation.

g. *Filed Pursuant to:* Federal Power Act, 16 U.S.C. 791(a)–825(r).

h. *Applicants' Contacts:* For the Tribes, Joe Hovenkotter, The Confederated Salish and Kootenai Tribes of the Flathead Reservation, Tribal Legal Department, P.O. Box 278, Pablo, MT 59855 (406) 675–2700, Ext. 1169; For PPLM, David R. Poe, LeBoeuf, Lamb, Greene & MacRae LLP, 1875 Connecticut Avenue, N.W., Washington, DC 20009 (202) 986–8039; For Interior, Kerry O'Hara, Attorney of Record, Department of the Interior, 1849 C Street, NW, MS 6456, Washington, D.C. (202) 208–6967.

i. *FERC Contact:* Robert Grieve, (202) 219–2655, or e-mail address: *robert.grieve@ferc.fed.us*

j. Deadline for filing comments and recommendations, motions to intervene, and protests: June 8, 2000.

All documents (original and eight copies) should be filed with: David P. Boergers, Secretary, Federal Energy Regulatory Commission, 888 First Street, NE, Washington, DC 20426. Please include the project number on any comments and recommendations, motions to intervene and protests.

k. Description of Application: PPLM and the Tribes, co-licensees of the above-captioned hydroelectric project, and Interior have filed an application to amend section (C)(2) and articles 59, 64, 65, 66, and 67 of the Kerr Hydroelectric Project license, in order to facilitate settlement of litigation pending with respect to certain license conditions promulgated by Interior and included by the Commission in its orders of June 25, 1997 (79 FERC ¶61,376(1997)) and October 30, 1998 (85 FERC ¶61,164 (1998)).

l. Location of the Application: A copy of the application is available for inspection and reproduction at the Commission's Public Reference Room, located at 888 First Street, NE Room 2A, Washington, DC 20426 or by calling (202) 208–1371. The application may be viewed on the web at *www.ferc.fed.us/online/rims.htm.* Call (202) 208–2222 for assistance.

m. Comments, Protests, or Motions to Intevene—Anyone may submit comments, a protest or a motion to intervene in accordance with the requirements of the Commission's Rules of Practice and Procedure, 18 CFR 385.210, 385.211 or 385.214. In determining the appropriate action to take, the Commission will consider all protests or other comments filed, but only those who file a motion to intervene in accordance with the Commission's Rules may become a party to the proceedings. Any comments, protests or motions to intervene must be received on or before the specified comment date for this application.

Filing and Serving of Responsive Documents—Any filings must bear in all capital letters the title ''COMMENTS'', or ''RECOMMENDATIONS FOR TERMS AND CONDITIONS'', ''PROTEST'', or ''MOTION TO INTERVENE'', as applicable, and the Project number of the application to which the filing refers. Any of the above-named documents must be filed by providing an original and the number of copies provided by the Commission's regulations to the address listed in Section j. A copy of any motion to intervene must also be served upon each representative of the Applicants specified in the application.

Agency Comments—Federal, state and local agencies are invited to file comments on the described application in addition to other interested parties. A copy of the application may be obtained by agencies directly from the Applicants. If an agency does not file comments within the time specified for filing comments, it will be presumed to have no comments. One copy of an agency's comments must also be sent to the Applicants' representatives.

Linwood A. Watson, Jr.,

Acting Secretary.

[FR Doc. 00–11075 Filed 5–3–00; 8:45 am]

BILLING CODE 6717–01–M

ENVIRONMENTAL PROTECTION AGENCY

[FRL–6587–6]

Regulatory Reinvention (XL) Pilot Projects

AGENCY: Environmental Protection Agency (EPA).

ACTION: Notice to announce the signing of the International Paper Project XL Final Project Agreement.

SUMMARY: EPA is announcing the signing of the Project XL Final Project Agreement (FPA) for International Paper and the availability of the agreement and related documents.

DATES: The FPA was signed on 20 April 2000 in Jay, Maine.

ADDRESSES: To obtain a copy of the Final Project Agreement, Test Plan or Fact Sheet, contact: Chris Rascher, EPA New England, 1 Congress Street (SPP), Boston, Massachusetts, or Ted Cochin, U.S. EPA, 1200 Pennsylvania Avenue NW (Mail Code 1802), Washington, DC 20460. The FPA and related documents are also available via the Internet at the

following location: *http://www.epa.gov/ProjectXL.* Public files on the project, including the FPA, are also available for review at the Town Hall, Town of Jay, Maine. Questions to EPA regarding the documents can be directed to Chris Rascher at (617) 918–1834 or Ted Cochin at (202) 260–0880. To be included on the International Paper Project XL mailing list about future public meetings, XL progress reports and other mailings from International Paper on the XL project, contact Kimberly Thompson, International Paper, Androscoggin Mill, 207–897–1554. For information on all other aspects of the XL Program contact Christopher Knopes at the following address: Office of Policy and Reinvention, United States Environmental Protection Agency, 1200 Pennsylvania Avenue, NW (Mail Code 1802), Washington, DC 20460. Additional information on Project XL, including documents referenced in this document, other EPA policy documents related to Project XL, regional XL contacts, application information, and descriptions of existing XL projects and proposals, is available via the Internet at *http://www.epa.gov/projectxl/inter/page1.htm.*

SUPPLEMENTARY INFORMATION: The Final Project Agreement (FPA) is a voluntary agreement developed by EPA, International Paper, the State of Maine, Town of Jay, and active stakeholders. Project XL, announced in the **Federal Register** on May 23, 1995 (60 FR 27282), gives regulated sources the flexibility to develop alternative strategies that will replace or modify specific regulatory requirements on the condition that they produce greater environmental benefits.

On February 15, 2000, EPA announced the availability of the draft FPA and Test Plan in the **Federal Register** (65 FR 7546) and requested comments by March 16, 2000. No comments were received as a result of the announcement.

International Paper will develop, test, and implement a computer model that can estimate pollutant emissions on a continuous basis. Currently, International Paper is required to measure some of these pollutants only once every year. If successfully developed and implemented, this computer model will provide the company and make available to the community, information on emissions that is continuous and reliable. To accomplish this, IP will be granted regulatory flexibility in two areas. The first is to allow potential minor exceedances above existing permit limits for the waste fuel incinerator to develop the computer model. However, as set forth more fully in the FPA, IP will offset any emission increases. The second area of flexibility will involve the frequency of stack testing and the replacement of continuous emission monitoring with the computer model, if the computer model proves successful.

Elizabeth Shaw,

Deputy Associate Administrator, Office of Reinvention Programs.

[FR Doc. 00–11143 Filed 5–3–00; 8:45 am]

BILLING CODE 6560–50–P

ENVIRONMENTAL PROTECTION AGENCY

[OPPTS–62163A; FRL–6553–1]

Asbestos-Containing Materials in Schools; State Request for Waiver From Requirements; Notice of Final Decision

AGENCY: Environmental Protection Agency (EPA).

ACTION: Notice of final decision on requested waiver.

SUMMARY: EPA is issuing a final decision which approves the request from Oklahoma for a waiver from the Agency's asbestos-in-schools program. A waiver of these requirements is granted since EPA has determined, after notice and comment and opportunity for a public hearing, that Oklahoma is implementing or intends to implement a program of asbestos inspection and management at least as stringent as EPA's program. This notice announces the official grant of the waiver.

ADDRESSES: A copy of the complete waiver application submitted by the State, identified by docket control number OPPTS–62163, is on file and available for review at the EPA Region VI office in Dallas, TX.

FOR FURTHER INFORMATION CONTACT: Neil Pflum, Asbestos Coordinator, (6PD–T), Region VI, Environmental Protection Agency, 1445 Ross Ave., Dallas, TX 75202; telephone: (214) 665–2295; e-mail: pflum.neil@epa.gov.

SUPPLEMENTARY INFORMATION:

I. General Information

A. Does This Action Apply to Me?

This action is directed to the public in general. This action may, however, be of special interest to teachers and other school personnel, their representatives, and parents in Oklahoma, and asbestos professionals working in Oklahoma. Since other entities may also be interested, the Agency has not attempted to describe all entities that may be affected by this action. If you have any questions regarding the applicability of this action to any entity, contact the person under **FOR FURTHER INFORMATION CONTACT.**

B. How Can I Get Additional Information, Including Copies of This Document or Other Related Documents?

EPA has established an official record for this action under docket control number OPPTS–62163. The official record consists of the documents referenced in this action and is available by contacting the person under, **FOR FURTHER INFORMATION CONTACT.**

II. Background

A. What Action is the Agency Taking and Under What Authority?

In the **Federal Register** of January 10, 2000 (65 FR 1387) (FRL–6397–2), EPA published a notice on the proposed grant of a waiver of the asbestos-in-schools program in Oklahoma, soliciting written comments and providing an opportunity for a public hearing. No comments and no requests for a public hearing were received during the comment period, which ended on March 9, 2000. Consequently, no public hearing was held.

EPA is granting, with conditions, a waiver of the asbestos-in-schools program to Oklahoma. The waiver is issued under section 203(m) of TSCA and 40 CFR 763.98. Section 203 is within Title II of TSCA, the Asbestos Hazard Emergency Response Act (AHERA).

In 1987, under TSCA section 203, the Agency promulgated regulations that require the identification and management of asbestos-containing material by local education agencies (LEAs) in the nation's elementary and secondary school buildings: the ''AHERA Schools Rule'' (40 CFR part 763, subpart E). Under section 203(m) of TSCA and 40 CFR 763.98, upon request by a State Governor and after notice and comment and opportunity for a public hearing in the State, EPA may waive, in whole or in part, the requirements of the asbestos-in-schools program (TSCA section 203 and the AHERA schools rule) if EPA determines that the State has established and is implementing or intends to implement a program of asbestos inspection and management that contains requirements that are at least as stringent as those in the Agency's asbestos-in-schools program. A State seeking a waiver must submit its request to the EPA Region in which the State is located.

The Agency recognizes that a waiver granted to any State does not encompass

schools operated under the defense dependents' education system (the third type of LEA defined at TSCA section 202(7) and 40 CFR 763.83), which serve dependents in overseas areas, and other elementary and secondary schools outside a State's jurisdiction, which generally include schools in Indian country. Such schools remain subject to EPA's asbestos-in-schools program.

B. When Did Oklahoma Submit its Request for a Waiver and How is EPA Responding?

On October 4, 1999, Oklahoma Governor Frank Keating, submitted to Gregg A. Cooke, Regional Administrator, EPA Region VI, a letter requesting a full waiver of the requirements of EPA's asbestos-in-schools program, to which was appended supporting documentation.

EPA is hereby announcing its final decision to grant a waiver of the asbestos-in-schools program to Oklahoma. The Agency is also describing the information submitted by Oklahoma and the Agency's determinations as to how the waiver request meets the criteria for the grant of a waiver.

C. What was EPA's Determination With Regard to the Completeness of Oklahoma's Waiver Request?

The Oklahoma waiver request has been deemed complete by EPA and contains the following:

1. A copy of the Oklahoma provisions that include its program of asbestos inspection and management in schools. These consist of: The Oklahoma Asbestos Control Act, Title 40 section 450 *et seq.* and Oklahoma Statutes, Title 27A, Section 1–3–101(J), and the Oklahoma Administrative Code (OAC) Title 380, Oklahoma Department of Labor, Chapter 50, ''Abatement of Friable Asbestos Materials Rules.''

2. The name of the Oklahoma agency responsible for administrating and enforcing the requirements of a waiver, namely the Oklahoma Department of Labor (ODOL). Responsible officials include: Brenda Reneau, Commissioner; Trey Davis, Deputy Commissioner; and John Crowder, Director of Asbestos—telephone: (405) 528–1500, ext. 352.

3. Reasons, supporting papers, and the rationale for concluding that Oklahoma's asbestos inspection and management programs, for which the waiver request is made, are at least as stringent as the requirements of EPA's program, as discussed in EPA's Determinations in Units II.D.2. and 3.

4. A discussion of any special situations, problems, and needs pertaining to the waiver request accompanied by an explanation of how Oklahoma plans to handle them, as discussed in EPA's Determination in Unit II.D.6.

5. A statement of the resources that Oklahoma intends to devote to the administration and enforcement of its program, as discussed in EPA's Determination in Unit II.D.5.

6. Copies of Oklahoma laws and regulations relating to the request, including provisions for assessing penalties, as referenced in Unit II.C.1.

7. Assurance from the legal counsel of ODOL that the Department has the legal authority necessary to carry out the requirements relating to the waiver request, as indicated in a letter from Kevin Able, General Counsel, to Gregg Cooke, dated September 20, 1999.

D. What are the Criteria for EPA's Grant of the Waiver and What are EPA's Determinations Relating to These Criteria?

EPA has waived the requirements of the Agency's asbestos-in-schools program for Oklahoma since the Agency has determined that Oklahoma has met the criteria set forth at 40 CFR 763.98. The criteria and EPA's determinations relating to the grant of the waiver to Oklahoma are set forth below:

1. *Criterion:* Oklahoma's lead agency has the legal authority necessary to carry out the provisions of asbestos inspection and management in schools relating to the waiver request.

EPA's Determination: EPA has determined that the statutory and regulatory provisions cited at Unit II.C.1. give ODOL such legal authority.

2. *Criterion:* Oklahoma's program is or will be at least as stringent as the EPA asbestos-in-schools program.

EPA's Determination: Since Oklahoma has adopted the AHERA schools rule by reference in its regulations, EPA has determined that Oklahoma's program is or will be at least as stringent as EPA's program. See EPA's Determination in Unit II.D.6.

3. *Criterion:* Oklahoma has an enforcement mechanism to allow it to implement the program described in the waiver request.

EPA's Determination: EPA has determined that the compliance and enforcement provisions of Oklahoma's asbestos-in-schools program are adequate to run the program. Inspectors will use site visits to determine if the LEAs are complying with the program. Violations will be cited for enforcement action which can range from warning letters (notices of noncompliance) to administrative actions to civil actions.

4. *Criterion:* ODOL has or will have qualified personnel to carry out the provisions relating to the waiver request.

EPA's Determination: EPA has determined that ODOL has or will have qualified personnel to carry out the provisions of the waiver. Inspectors currently employed by ODOL have had experience in conducting asbestos inspections in schools.

5. *Criterion:* Oklahoma will devote adequate resources to the administration and enforcement of the asbestos inspection and management provisions relating to the waiver request.

EPA's Determination: EPA has determined that Oklahoma has adequate resources to administer and enforce the provisions of the program. Oklahoma plans to devote $143,508 to the program annually. It plans to match a Federal grant of $107,631, with $35,877 of State funds. The budget allows for two inspectors, travel, supplies, and training.

6. *Criterion:* Oklahoma gives satisfactory assurances that the necessary steps, including specific actions it proposes to take and a time schedule for their accomplishment, will be taken within a reasonable time to conform with applicable criteria in Units II.D.2–4.

EPA's Determination: As a condition of EPA's grant of the waiver, Oklahoma has given a written assurance satisfactory to EPA (letter from Brenda Reneau, Commissioner, ODOL, to Gregg Cooke, dated March 9, 2000, that, if following the grant of the waiver, any provision of either TSCA section 203 or the AHERA schools rule is changed, the State would, within a reasonable period of time, make appropriate changes, as necessary, to the statutory and regulatory provisions of its asbestos-in-schools program to ensure that the program remains at least as stringent as the EPA asbestos-in-schools program.

In addition, as long as the waiver remains in effect, Oklahoma, utilizing adequate resources, will need to continue its asbestos-in-schools implementation and enforcement strategy. EPA may evaluate periodically the adequacy of Oklahoma's program under 40 CFR 763.98, and, under circumstances set forth in the regulation, may, in whole or in part, rescind the waiver if the Agency determines the program to be inadequate.

E. What Recordkeeping and Reporting Burden Approvals Apply to the Oklahoma Waiver Request?

The recordkeeping and reporting burden associated with waiver requests was approved by the Office of Management and Budget (OMB) under

OMB control number 2070–0091. This document announces the Agency's grant of the Oklahoma waiver request and imposes no additional burden beyond that covered under existing OMB control number 2070–0091.

III. Materials in the Official Record

The official record, under docket control number OPPTS–62163, contains the Oklahoma waiver request, supporting documentation, and other relevant documents.

List of Subjects

Environmental protection, Administrative practice and procedure, Asbestos, Hazardous substances, Imports, Intergovernmental relations, Labeling, Occupational safety and health, Reporting and recordkeeping requirements, Schools.

Dated: April 21, 2000.

Jerry Clifford,

Acting Regional Administrator, Region VI.

[FR Doc. 00–11148 Filed 5–3–00; 8:45 am]

BILLING CODE 6560–50–F

ENVIRONMENTAL PROTECTION AGENCY

[PB–402404–MN–A; FRL–6499–3]

Lead-Based Paint Activities in Target Housing and Child-Occupied Facilities; State of Minnesota Approval of Lead-Based Paint Activities Program

AGENCY: Environmental Protection Agency (EPA).

ACTION: Notice; approval of the Minnesota TSCA Section 402/404 Lead-Based Paint Accreditation and Certification Program.

SUMMARY: On September 29, 1999, the State of Minnesota, through the Minnesota Department of Health, submitted an application for EPA approval to administer and enforce training and certification requirements, training program accreditation requirements, and work practice standards for lead-based paint activities in target housing and child-occupied facilities under section 402 of the Toxic Substances Control Act (TSCA). Minnesota provided a self-certification letter stating that its program is at least as protective of human health and the environment as the Federal program and it has the legal authority and ability to implement the appropriate elements necessary to receive EPA approval. In the **Federal Register** of December 22, 1999 (64 FR 71781) (FRL–6393–2), EPA published a notice announcing receipt of the State's application and requesting public comment and/or opportunity for a public hearing on the State's application. EPA did not receive any comments regarding any aspect of the Minnesota program and/or application. Today's notice announces the approval of the Minnesota application, and the authorization of the Minnesota Department of Health's Lead-Based Paint Activities Program to apply in the State of Minnesota, effective September 29, 1999, in lieu of the corresponding Federal program under section 402 of TSCA.

DATES: Based upon the State's self-certification, Lead-Based Paint Activities Program authorization was granted to the State of Minnesota on September 29, 1999.

FOR FURTHER INFORMATION CONTACT: Emma Avant-Parks, Project Officer, Environmental Protection Agency, Region V, 77 W. Jackson Blvd., DT–8J, Chicago, IL 60604. Telephone: 312–886–7899; e-mail address: avant.emma@epa.gov.

SUPPLEMENTARY INFORMATION:

I. General Information

A. Does This Action Apply to Me?

This action is directed to the public in general. This action may, however, be of interest to firms and individuals engaged in lead-based paint activities in Minnesota. Since other entities may also be interested, the Agency has not attempted to describe all the specific entities that may be affected by this action. If you have any questions regarding the applicability of this action to a particular entity, consult the person listed under **FOR FURTHER INFORMATION CONTACT.**

B. How Can I Get Additional Information, Including Copies of This Document or Other Related Documents?

1. *Electronically.* You may obtain electronic copies of this document, and certain other related documents that might be available electronically, from the EPA Internet Home Page at http://www.epa.gov/. To access this document, on the Home Page select ''Laws and Regulations'' and then look up the entry for this document under the ''**Federal Register**—Environmental Documents.'' You can also go directly to the **Federal Register** listings at http://www.epa.gov/fedrgstr/.

2. *In person.* The Agency has established an official record for this action under docket control number PB–402404–MN. The official record consists of the documents specifically referenced in this action, this notice, the State of Minnesota authorization application, any public comments received during an applicable comment period, and other information related to this action, including any information claimed as Confidential Business Information (CBI). This official record includes the documents that are physically located in the docket, as well as the documents that are referenced in those documents. The public version of the official record does not include any information claimed as CBI. The public version of the official record, which includes printed, paper versions of any electronic comments submitted during an applicable comment period, is available for inspection from 8 a.m. to 4:30 p.m., Monday through Friday, excluding legal holidays. The docket is located at the EPA Region V Office, Environmental Protection Agency, Waste, Pesticides and Toxics Division, Pesticides and Toxic Substances Branch, Toxic Programs Section, DT–8J, 77 West Jackson Blvd., Chicago, IL.

II. Background

On October 28, 1992, the Housing and Community Development Act of 1992, Public Law 102–550, became law. Title X of that statute was the Residential Lead-Based Paint Hazard Reduction Act of 1992. That Act amended TSCA (15 U.S.C. 2601 *et seq.*) by adding Title IV (15 U.S.C. 2681–92), titled *Lead Exposure Reduction.* Section 402 of TSCA (15 U.S.C. 2682) authorizes and directs EPA to promulgate final regulations governing lead-based paint activities in target housing, public and commercial buildings, bridges and other structures. Under section 404 of TSCA, a State may seek authorization from EPA to administer and enforce its own lead-based paint activities program. On August 29, 1996 (61 FR 45777) (FRL–5389–9), EPA promulgated final TSCA section 402/404 regulations (40 CFR part 745) governing lead-based paint activities in target housing and child-occupied facilities. States and Tribes that choose to apply for program authorization must submit a complete application to the appropriate Regional EPA Office for review. To receive EPA approval, a State or Tribe must demonstrate that its program is at least as protective of human health and the environment as the Federal program, and provides for adequate enforcement (TSCA section 404(b), 15 U.S.C. 2684(b)). EPA's regulations (40 CFR part 745, subpart Q) provide the detailed requirements a State or Tribal program must meet in order to obtain EPA approval.

Under these regulations, a State must demonstrate that it has the legal authority and ability to immediately

implement certain elements, including legal authority for accrediting training providers, certification of individuals, work practice standards and pre-renovation notification, authority to enter, and flexible remedies. In order to receive final approval, the State must be able to demonstrate that it is able to immediately implement the remaining performance elements, including training, compliance assistance, sampling techniques, tracking tips and complaints, targeting inspections, follow up to inspection reports, and compliance monitoring and enforcement.

III. Federal Overfiling

Section 404(b) of TSCA makes it unlawful for any person to violate, or fail or refuse to comply with, any requirement of an approved State or Tribal program. Therefore, EPA reserves the right to exercise its enforcement authority under TSCA against a violation of, or a failure or refusal to comply with, any requirement of an authorized State or Tribal program.

IV. Withdrawal of Authorization

Pursuant to section 404(c) of TSCA, the EPA Administrator may withdraw a State or Tribal lead-based paint activities program authorization, after notice and opportunity for corrective action, if the program is not being administered or enforced in compliance with standards, regulations, and other requirements established under the authorization. The procedures EPA will follow for the withdrawal of an authorization are found at 40 CFR 745.324(i).

V. Submission to Congress and the Comptroller General

The Congressional Review Act, 5 U.S.C. 801 *et seq.*, as added by the Small Business Regulatory Enforcement Fairness Act of 1996, generally provides that before certain actions may take effect, the agency promulgating the action must submit a report, which includes a copy of the action, to each House of the Congress and to the Comptroller General of the United States. EPA will submit a report containing this action and other required information to the U.S. Senate, the U.S. House of Representatives, and the Comptroller General of the United States prior to publication of this document in the **Federal Register**. This action is not a ''major rule'' as defined by 5 U.S.C. 804(2).

List of Subjects

Environmental protection, Hazardous substances, Lead, Reporting and recordkeeping requirements.

Dated: April 21, 2000.

Francis X. Lyons,

Regional Administrator, Region V.

[FR Doc. 00–11149 Filed 5–3–00; 8:45 am]

BILLING CODE 6560–50–F

ENVIRONMENTAL PROTECTION AGENCY

[FRL–6587–5]

Clean Water Act Section 303(d): Availability of Total Maximum Daily Loads (TMDLs) and Determinations That TMDLs Are Not Needed

AGENCY: Environmental Protection Agency (EPA).

ACTION: Notice of availability, comment period extended.

SUMMARY: This notice extends the comment period of the **Federal Register** notice published at 65 FR 19762 on April 12, 2000.

DATES: Comments must be submitted to EPA on or before May 31, 2000.

ADDRESSES: Comments should be sent to Ellen Caldwell, Environmental Protection Specialist, Water Quality Protection Division, U.S. Environmental Protection Agency Region 6, 1445 Ross Ave., Dallas, TX 75202–2733. For further information, contact Ellen Caldwell at (214) 665–7513.

Dated: April 24, 2000.

William B. Hathaway,

Director, Water Quality Protection Division, Region 6.

[FR Doc. 00–11144 Filed 5–3–00; 8:45 am]

BILLING CODE 6560–50–P

FEDERAL ELECTION COMMISSION

Sunshine Act Meeting

DATE & TIME: Tuesday, May 9, 2000 at 10:00 a.m.

PLACE: 999 E Street, NW., Washington, DC.

STATUS: This meeting will be closed to the Public.

ITEMS TO BE DISCUSSED: Compliance matters pursuant to 2 U.S.C. § 437g.

Audits conducted pursuant to 2 U.S.C. § 437g, § 438(b), and Title 26, U.S.C.

Matters concerning participation in civil actions or proceedings or arbitration.

Internal personnel rules and procedures or matters affecting a particular employee.

DATE & TIME: Thursday, May 11, 2000 at 10:00 a.m.

PLACE: 999 E Street, NW., Washington, DC (Ninth Floor).

STATUS: The meeting will be open to the Public.

ITEMS TO BE DISCUSSED: Correction and Approval of Minutes.

Draft Advisory Opinion 2000–05: The Oneida Nation of New York by counsel, Markham C. Erickson. (continued from April 27, 2000).

Final Rules and Explanation and Justification for the Administrative Fine Program

Administrative Matters.

PERSON TO CONTACT FOR INFORMATION: Mr. Ron Harris, Press Officer, Telephone: (202) 694–1220.

Mary W. Dove,

Acting Secretary of the Commission.

[FR Doc. 00–11247 Filed 5–2–00; 11:57 am]

BILLING CODE 6715–01–M

FEDERAL MARITIME COMMISSION

Notice of Agreement(s) Filed

The Commission hereby gives notice of the filing of the following agreement(s) under the Shipping Act of 1984. Interested parties can review or obtain copies of agreements at the Washington, DC offices of the Commission, 800 North Capitol Street, N.W., Room 962. Interested parties may submit comments on an agreement to the Secretary, Federal Maritime Commission, Washington, DC 20573, within 10 days of the date this notice appears in the **Federal Register**.

Agreement No.: 203–011426–029.

Title: West Coast of South America Discussion Agreement.

Parties:

A.P. Moller-Maersk Sealand
APL Co. PTE Ltd.
Colombus Line
Compania Chilena de Navegacion Interoceania, S.A.
Compania Sud Americana de Vapores, S.A.
Crowley American Transport, Inc.
Seaboard Marine Ltd.
Mediterranean Shipping Company, S.A.
NYK/NOS Joint Service
P&O Nedlloyd B.V.
Seaboard Marine, Ltd.
Ecuadorian Line
South American Independent Lines Association and its members: Interocean Lines, Inc., Trinity Shipping Line, S.A.

Synopsis: The proposed amendment clarifies that authority to discuss service

contract rates extends to joint and/or individual service contracts. The amendment also clarifies that the parties may communicate with one another indirectly as well as directly.

Agreement No.: 203–011637–002.

Title: MLL/TMG/Columbus/Maruba Cooperative Working Agreement.

Parties:

Mexican Line Limited

Transportacion Maritima Grancolombiana, S.A. (''TMG'')

Columbus Line

Maruba S.C.A.

Synopsis: The proposed amendment would expand the geographic scope of the Agreement to include Japan, the People's Republic of China, Hong Kong, Taiwan, and Korea. It would also delete TMG as a party to the Agreement and change the Agreement's name to the ''Ampac Cooperative Working Agreement.'' In addition, the amendment would modify the Agreement to reflect changes to the parties' services and space allocations necessary to accommodate their expanded trade area and would make other clarifying modifications to their service contract and withdrawal provisions. The parties have requested expedited review.

Agreement No.: 217–011706.

Title: Kent Line/Seaboard Space Charter and Sailing Agreement.

Parties:

Kent Line International Limited

Seaboard Marine Ltd.

Synopsis: The proposed Agreement would permit the parties to charter space to one another and to coordinate their vessel service in the trade between United States Atlantic and Puerto Rican ports and ports in Antigua, Barbados, Trinidad, the Dominican Republic, Jamaica, Venezuela and on the Atlantic Coast of Canada. The parties have requested expedited review.

Agreement No.: 203–011707.

Title: Gulf/South America Discussion Agreement.

Parties:

Associated Transport Line, L.L.C.

Industrial Maritime Carriers (U.S.A.) Inc., operating as Intermarine.

Synopsis: The agreement permits the parties to discuss and voluntarily agree on rates and related matters in the trade between the U.S. Gulf and Colombia, Ecuador, Peru, Chile, Argentina, Brazil, Venezuela and Trinidad.

Dated: April 28, 2000.

By Order of the Federal Maritime Commission.

Bryant L. VanBrakle,

Secretary.

[FR Doc. 00–11069 Filed 5–3–00; 8:45 am]

BILLING CODE 6730–01–P

FEDERAL MARITIME COMMISSION

Ocean Transportation Intermediary License; Applicant

Notice is hereby given that the following applicants have filed with the Federal Maritime Commission an application for licenses as Non-Vessel Operating Common Carrier and Ocean Freight Forwarder—Ocean Transportation Intermediary pursuant to section 19 of the Shipping Act of 1984 as amended (46 U.S.C. app. 1718 and 46 CFR 515).

Persons knowing of any reason why the following applicants should not receive a license are requested to contact the Office of Transportation Intermediaries, Federal Maritime Commission, Washington, D.C. 20573.

Non-Vessel-Operating Common Carrier Ocean Transportation Intermediary Applicants:

BDP Transport, LLC, 510 Walnut Street, Philadelphia, PA 19106, Officers: Richard J. Bolte, Jr., President, (Qualifying Individual) John McMillan, Director.

Non-Vessel Operating Common Carrier and Ocean Freight Forwarder Transportation Intermediary Applicants:

Logistics +, Inc., One Centennial Drive, Jamestown, NY 14701, Officers: Debra A. Wagner, Manager, (Qualifying Individual) James R. Berlin, President.

Atlantic Pacific Container Line LLC d/b/a APC Line, Aero Marine Industrial Park Oak Street, Bldg. #K, Keyport, NJ 07735, Officer: Nadia A. Otagah, CEO, (Qualifying Individual).

Ocean Freight Forwarders—Ocean Transportation Intermediary Applicants:

J&M International, Inc., 7020 S. Yale, Suite 207, Tulsa, OK 74136–5744, Officers: Joseph D. Fain, President, (Qualifying Individual) Tom K. Murray, Vice President.

Dated: April 28, 2000.

Bryant L. VanBrakle,

Secretary.

[FR Doc. 00–11068 Filed 5–3–00; 8:45 am]

BILLING CODE 6730–01–P

GENERAL SERVICES ADMINISTRATION

President's Commission on the Celebration of Women in American History

AGENCY: General Services Administration.

ACTION: Meeting notice.

SUMMARY: Notice is hereby given that the President's Commission on the Celebration of Women in American History will hold an open meeting from 9 a.m. to 4:30 p.m. on Tuesday, June 6, 2000. The meeting will be held at the U.S. Custom House, #1 Bowling Green, in Lower Manhattan, New York City.

Purpose: To hear testimony about the recommendations for institutionalizing ways to commemorate women in American history and review current related activities. Guest speakers will address how to celebrate achievements of American Women and review the status of the Commission's recommendations for action for the year 2000. Participants may wish to make a statement covering personal interests in the history of women in America or share thoughts on appropriate commemorative events.

FOR FURTHER INFORMATION CONTACT: Martha Davis (202) 501–0705, Assistant to the Associate Administrator for Communications, General Services Administration. Also, inquiries may be sent to *martha.davis@gsa.gov.*

Dated: April 27, 2000.

Beth Newburger,

Associate Administrator for Communications.

[FR Doc. 00–11090 Filed 5–3–00; 8:45 am]

BILLING CODE 6820–34–M

DEPARTMENT OF HEALTH AND HUMAN SERVICES

Office of the Secretary

Agency Information Collection Activities: Proposed Collections;; Comment Request

AGENCY: Agency information collection activities:

The Department of Health and Human Services, Office of the Secretary will periodically publish summaries of proposed information collection projects and solicit public comments in compliance with the requirements of Sections 3506(c)(2)(A) of the Paperwork Reduction Act of 1995. To request more information on the project or to obtain a copy of the information collection plans and instruments, call the OS

Reports Clearance Officer on (202) 690–6207.

Comments are invited on: (a) Whether the proposed collection of information is necessary for the proper performance of the functions of the agency, including whether the information shall have practical utility; (b) the accuracy of the agency's estimate of the burden of the proposed collection of information; (c) ways to enhance the quality, utility and clarity of the information to be collected; and (d) ways to minimize the burden of the collection of information on respondents, including through the use of automated collection techniques or other forms of information technology.

Proposed Projects 1. OCR Pre-grant Automation Project— New—The Office for Civil Rights (OCR) has developed a standardized automated review format for the conduct of civil rights compliance investigations of health care providers who have requested certification to participate in the Medicare program. Health care providers requesting certification must review their policies/practices and submit material to demonstrate compliance with the civil rights requirements of Title VI of the Civil Rights Act of 1964, Section 504 of the Rehabilitation Act of 1973 and the Age Discrimination Act of 1975. Respondents: Businesses or other for-profit, State, Local or Tribal Government; Annual Number of Respondents: 3,000; Frequency of Response: one time; Average Burden per Response: 16 hours; Annual Burden: 48,000 hours.

Send comments to Cynthia Agens Bauer, OS Reports Clearance Officer, Room 503H, Humphrey Building, 200 Independence Avenue S.W., Washington DC, 20201. Written comments should be received within 60 days of this notice.

Dated: April 18, 2000.

Dennis P. Williams,

Deputy Assistant Secretary, Budget.

[FR Doc. 00–11126 Filed 5–3–00; 8:45 am]

BILLING CODE 4150–04–V

DEPARTMENT OF HEALTH AND HUMAN SERVICES

National Committee on Vital and Health Statistics: Meeting

Pursuant to the Federal Advisory Committee Act, the Department of Health and Human Services announces the following advisory committee meeting.

Name: National Committee on Vital and Health Statistics (NCVHS) Executive Subcommittee.

Time and Date: 10:00 a.m.–3:00 p.m. EDT, May 9, 2000.

Place: Hubert H. Humphrey Building, Conference Room 425A, 200 Independence Avenue S.W., Washington, DC.

Status: Open.

Purpose: At this meeting, the Executive Subcommittee will discuss work plans for the year 2000, including future meetings, hearings, reports, and other projects. They will also begin to plan for a strategic planning retreat to be held later this year.

Notice: In the interest of security, the Department has instituted stringent procedures for entrance to the Hubert H. Humphrey building by non-government employees. Persons without a government identification card may need to have the guard call for an escort to the meeting.

CONTACT PERSON FOR MORE INFORMATION: Substantive program information as well as summaries of meetings and a roster of committee members may be obtained from Marjorie S. Greenberg, Executive Secretary, NCVHS, National Center for Health Statistics, Centers for Disease Control and Prevention, Room 1100, Presidential Building, 6525 Belcrest Road, Hyattsville, Maryland 20782, telephone (301) 458–4245. Information also is available on the NCVHS home page of the HHS website: http://www.ncvhs.hhs.gov/, where further information will be posted when available.

Dated: April 26, 2000.

James Scanlon,

Director, Division of Data Policy, Office of the Assistant Secretary for Planning and Evaluation.

[FR Doc. 00–11125 Filed 5–3–00; 8:45 am]

BILLING CODE 4151–05–M

DEPARTMENT OF HEALTH AND HUMAN SERVICES

Agency for Healthcare Research and Quality

Agency Information Collection Activities; Proposed Collection: Comment Request

AGENCY: Agency for Healthcare Research and Quality (AHRQ), formerly known as the Agency for Health Care Policy and Research (AHCPR), HHS.

ACTION: Notice.

SUMMARY: This notice announces the Agency for Healthcare Research and Quality (AHRQ) intention to request the Office of Management and Budget (OMB) to allow a proposed information collection project: ''Development and Implementation of National guideline Clearinghouse (NGC) Evaluation''. In accordance with the Paperwork Reduction Act of 1995, Public law 104–13 (44 U.S.C. 3506(c)(2)(A)), AHRQ invites the public to comment on this proposed information collection.

This proposed information collection was previously published in the **Federal Register** on February 25, 2000 and allowed 60 days for public comment. No public comments were received.

The purpose of this notice is to allow an additional 30 days for public comment.

DATES: Comments on this notice must be received by June 5, 2000.

ADDRESSES: Written comments should be submitted to the OMB Desk Officer at following address: Allison Eydt, Human Resources and Housing Branch, Office of Information and Regulatory Affairs, OMB, New Executive Office Building, Room 10235, Washington, DC 20503.

Comments submitted in response to this notice will be summarized and included in the request for OMB approval of the proposed information collection. All comments will become a matter of public record.

In accordance with the above cited legislation, comments on the AHRQ information collection proposal are requested with regard to any of the following: (a) whether the proposed collection of information is necessary for the proper performance of functions of the Agency, including whether the information will have practical utility; (b) the accuracy of the Agency's estimate of the burden (including hours and costs) of the proposed collection of information; (c) ways to enhance the quality, utility, and clarity of the information to be collected; and (d) ways to minimize the burden of the collection of information on respondents, including the use of automated collection techniques or other forms of information technology.

Copies of the proposed collection plans, data collection instruments, and specific details on the estimated burden can be obtained from the AHRQ Reports Clearance Officer.

FOR FURTHER INFORMATION CONTACT: Cynthia D. McMichael, AHRQ Reports Clearance Officer, (301) 594–3132.

SUPPLEMENTARY INFORMATION:

Proposed Project

Development and Implementation of National Guideline Clearinghouse (NGC) Evaluation

The NGC already reaches many individuals indicating its great potential to affect medical practice. In the nine months since it became available to the public, the NGC site has processed over 5 million requests guideline information with an average user visit lasting seven minutes. Over the last six months, the ''hit volume'' (*e.g.* connection to the Internet site) has been fairly constant with approximately 36,000 per day. The majority of users are within the United States, but the site is also utilized globally, indicating the potential for far reaching effects.

AS the NGC audience continues to grow and the field of best practices develops, the Web site will only be effective if it keeps pace with the needs of its users. A small study conducted by the American Medical Association (AMA) to gauge NGC awareness and satisfaction with the site among their members provides the only data to date on how the NGC is currently perceived by users. Although its conclusions were limited by a small sample size of physician respondents (*e.g.,* n=44), the AMA survey suggested that several functions of the NGC could be improved. These findings support the need for a further, more comprehensive evaluation of the site's quality and usefulness in order for AHRQ to meet users' needs and to promote implementation of guidelines by health care professionals. The results of this type of evaluation will assist AHRQ and others to understand what users want and need to utilize clinical guidelines in the provision of care. The timeliness and need for this evaluation effort are further underscored by the development of a customer satisfaction survey by the NGC Web site developer pursuant to its original contract in accordance with widely accepted management practices. This electronic survey is designed to capture NGC audience satisfaction with the interface and format of the Web site and will complement this proposed evaluation of the content, quality, and usefulness of information.

The NGC is intended to serve the needs of a diverse population of users. Not only are the user groups different, their expectations and uses of the NGC are unique. Moreover, no single sampling or data collection technique is sufficient to capture the needed information from these groups. A survey that attempted to capture the perspectives of all groups would be long, complicated, and burdensome.

Therefore, we propose using a three-tiered data collection scheme designed to get distinct types of information in a manner most useful to helping evaluate how well the Web site is serving its intended populations. The three proposed approaches are survey questionnaire, focus group discussions, and unstructured, informational discussions. Each will be applied to a subset of all users, as appropriate, to capture their unique needs and complement the overall data collection effort.

Data Confidentiality Provisions

Although no information on race, income, sexual behavior and attitudes, religious beliefs, or other matters commonly considered private will be requested, the contractor responsible for conducting the study will perform in accordance with the requirements of the Privacy Act, 5 USC 552a, and the Agency's confidentiality statute, 42 USC 299c–3(c), to protect respondents' privacy and the confidentiality of data collected. All results will be reported without attributing responses to any individual source. Information gained for the purposes of this data collection will only be used for the purposes of this project.

Data Products

The evaluation goals will be achieved through three types of data collection: (1) Written survey questionnaires, (2) focus groups, and (3) discussions with individuals working in health care who contribute to guideline development and use. Assignments of data collection modes to target audience groups are designed to reach the maximum number of respondents and the broadest range of groups. Participation will be minimally burdensome and is voluntary. Both qualitative and quantitative data will be collected to characterize the experiences and needs of users in a manner most likely to facilitate improvement activities by AHRQ.

The project will benefit AHRQ, the medical community, policymakers, health service researchers, and ultimately patients in the following ways:

- AHRQ will be able to monitor how their current format and content are serving their intended audiences;
- AHRQ will be able to assess how the Clearinghouse is affecting future development of guidelines and their implementation in clinical practices;
- AHRQ will be able to use the evaluation results to refine the site, thereby making it more useful for the medical community and other professionals who use guidelines in care management;
- Individual clinicians will be better able to obtain timely guidance about the management of complex clinical problems;
- Federal, State, and private purchasers will be better able to encourage contracted or prospective plans and providers to adopt clinical practices that are consistent with the best available standards of care; and
- Public policy experts will be better able to obtain unbiased, evidence-based guidelines and information for decisionmaking and policy purposes.

Method of Collection

Electronic mail will be used to transmit the written survey responses. The written survey will be also be linked to the NGC Website. Users can complete the survey on-line, and their responses will be automatically submitted. By using e-mail and the Web link to target our audience, we are ensuring that our respondents are Web-based users. This approach significantly reduces the burden to non-Web users who would be unable to contribute information useful to this data collection. Additionally, this use of information technology minimizes the burden on the targeted respondents by improving the ease with which they can submit their survey responses.

ESTIMATED ANNUAL RESPONDENT BURDEN

Annual number of respondents	Estimated time per respondent (hours)	Estimated total annual burden hours	Estimated annual cost to the government
1,359	0.25	408	$249,993

The survey instrument is short and poses minimal burden on the time of respondents. Estimates of time required to complete the survey during the pilot phase range from 7 to 20 minutes. The annual hour burden calculation assumes each survey will last 15 minutes, therefore the total of annualized hourly costs to participants is estimated to be $30,040.

John M. Eisenbert,

Director.

[FR Doc. 00–10983 Filed 5–3–00; 8:45 am]

BILLING CODE 4160–90–M

DEPARTMENT OF HEALTH AND HUMAN SERVICES

Centers for Disease Control And Prevention

[60Day–00–36]

Proposed Data Collections Submitted for Public Comment and Recommendations

In compliance with the requirement of section 3506 (c)(2)(A) of the Paperwork Reduction Act of 1995, the Centers for Disease Control and Prevention is providing opportunity for public comment on proposed data collection projects. To request more information on the proposed projects or to obtain a copy of the data collection plans and instruments, call the CDC Reports Clearance Officer on (404) 639–7090.

Comments are invited on: (a) Whether the proposed collection of information is necessary for the proper performance of the functions of the agency, including whether the information shall have practical utility; (b) the accuracy of the agency's estimate of the burden of the proposed collection of information; (c) ways to enhance the quality, utility, and clarity of the information to be collected; and (d) ways to minimize the burden of the collection of information on respondents, including through the use of automated collection techniques for other forms of information technology. Send comments to Seleda Perryman, CDC Assistant Reports Clearance Officer, 1600 Clifton Road, MS–D24, Atlanta, GA 30333. Written comments should be received within 60 days of this notice.

Proposed Projects

Youth Risk Behavior Survey—(0920–0258)—Renewal—National Center for Chronic Disease Prevention and Health Promotion (NCCDPHP). The proposed project is the 2001 national school-based Youth Risk Behavior Survey. The purpose of this request is to renew OMB clearance to continue an ongoing biennial survey among high school students attending regular public, private, and Catholic schools in grades 9–12. The survey assesses priority heath risk behaviors related to the major preventable causes of mortality, morbidity, and social problems among both youth and adults in the U.S. OMB clearance for the 1999 survey expired January 2000 (OMB No. 0920–0258, expiration 01/00). Data on the health risk behaviors of adolescents is the focus of approximately 40 national health objectives in Healthy People 2010. The Youth Risk Behavior Survey provides data to measure at least 10 of these health objectives and 3 of the 10 Leading Health Indicators. In addition, the Youth Risk Behavior Survey can identify racial and ethnic disparities in health risk behaviors. No other national source of data measures as many of the 2010 objectives that address behaviors of adolescents. The data also will have significant implications for policy and program development for school health programs nationwide.

The total estimated cost to student respondents is $47,250, which is calculated in terms of their time spent in responding to the survey and is based on an assumed minimum wage of $5.25/hour for the 1999–2000 school year. The total estimated cost to school administrators is $5,882 which is calculated in terms of their time spent in recruitment and is based on an assumed average hourly rate of $34. Thus, the total costs to respondents, based on the costs of their time, are $53,132.

Respondents	Number of respondents	Number of responses per respondent	Burden per response (in hours)	Total burden hours.
High school students	12,000	1	0.75	9,000
School administrators	345	1	0.50	173
Total	12,345			9,173

Dated: April 28, 2000.

Charles W. Gollmar,

Acting Associate Director for Policy Planning and Evaluation, Centers for Disease Control and Prevention.

[FR Doc. 00–11095 Filed 5–3–00; 8:45 am]

BILLING CODE 4163–18–P

DEPARTMENT OF HEALTH AND HUMAN SERVICES

Centers for Disease Control and Prevention

Notice of Intent; Genetic Testing Under the Clinical Laboratory Improvement Amendments

SUMMARY: The Centers for Disease Control and Prevention (CDC) acts as a scientific advisor to the Health Care Financing Administration (HCFA) in development of requirements for clinical laboratories under the Clinical Laboratory Improvement Amendments (CLIA). The CDC is issuing this notice to advise the public that the Department of Health and Human Services (HHS) will be preparing a Notice of Proposed Rule Making (NPRM) to revise the CLIA regulations applicable to laboratories performing human genetic testing. Before issuing the NPRM, comments are being solicited on the recommendations of the Clinical Laboratory Improvement Advisory Committee (CLIAC) to change current CLIA requirements to specifically recognize a genetic testing specialty. This new speciality area will address unique testing issues in the pre-analytic, analytic, and post-analytic phases of testing that could affect the accuracy and reliability of test results, and related issues such as informed consent, confidentiality, counseling, and the clinical appropriateness of a genetic test. To ensure that a full range of issues relating to this proposed action are addressed and potential impacts are identified, comments and suggestions are invited from all interested parties. Comments or questions regarding this proposed action should be directed to CDC at the address below.

The Department has also established a Secretary's Advisory Committee on Genetic Testing (SACGT) to advise the Department on the medical, scientific, ethical, legal, and social issues raised by the development and use of genetic

testing. The SACGT is currently addressing, in consultation with the public, broad questions related to the adequacy of oversight of genetic testing. If, after public consultation and analysis, SACGT finds that further oversight measures are warranted, it will recommend options for such oversight. The public comment for the SACGT issues is being conducted separately (See the December 1, 1999 **Federal Register**, 64 FR 67273). The reason for independent solicitations is that the SACGT is addressing more general aspects of genetic testing, such as the criteria that should be used to assess the benefits and risks of genetic tests. That purpose differs from this solicitation that deals specifically with the application of CLIA to genetic laboratory testing. The two requests for public comments thus solicit complementary information: the SACGT comments will guide development of recommendations to the Secretary on policy and oversight issues, whereas comments on the CLIAC recommendations will guide development of appropriate genetic testing laboratory requirements for revision of the CLIA regulations.

DATES: Written comments received by July 3, 2000, will be incorporated into the record.

ADDRESSES: Send comments to D. Joe Boone, Ph.D., Assistant Director for Science, Division of Laboratory Systems, Public Health Practice Program Office, Centers for Disease Control and Prevention, 4770 Buford Highway., N.E., Mailstop G25, Atlanta, Georgia 30341, at telephone (770) 488–8080.

SUPPLEMENTARY INFORMATION:

Background

A. Human Genetic Testing

Human genetic testing involves the analysis of chromosomes, dioxyribonucleic acids (DNA), ribonucleic acids (RNA), and genes and gene products (*e.g.* proteins and enzymes) to detect heritable or acquired disease-related disorders or conditions. Federal and private-sector human genome projects will soon decipher the structure for the 100,000 to 140,000 genes residing on the 23 pairs of human chromosomes. It is expected that along with this definition of structure will come associations between the variations in gene structure and a variety of conditions and diseases. Once associations have been delineated, the use of genetic testing is expected to expand significantly to determine whether an individual has a condition or disease or might develop a condition or disease in the future.

Human genetic testing is expected to lead to a whole new era in health care. Some tests may determine not only whether an individual has a particular disease or condition, but also may determine their risk of developing a disease or condition in the future. However, along with the tremendous potential for improving health and preventing disease, genetic testing can also do great harm if errors occur in: (1) The selection of an appropriate test, (2) the performance of the test, (3) the interpretation of the tests results, or (4) the clinical application of the test results. False-positive or false-negative results can be especially troublesome when the test is being used to predict future risk of disease in an individual without any current symptoms of disease.

The process of performing a genetic test can be broken into three distinct phases: (1) The pre-analytic phase, which encompasses such events as determining which genetic test, if any, is appropriate to answer the clinical question being asked and collecting an appropriate sample and transporting it to the test site; (2) the analytical phase, which involves steps taken to perform the analysis and analyze the results; and (3) the post-analytic phase, which includes reporting and interpretation of the results. It is important to recognize that the laboratory may need to be involved in carrying out or assisting with all three phases of testing and that errors can occur either within the laboratory or at the interface between the laboratory and the care provider.

In the pre-analytic phase, one recent study found that 20 percent of adenomatous polyposis coli (APC) genetic tests were ordered for inappropriate indications and 19 percent of patients received genetic counseling before testing occurred (Giardiello FM, *et al.* The use and interpretation of commercial APC gene testing for familial adenomatous polyposis. N Engl J Med 1997;336:823–827). Another recent survey of 245 molecular genetic testing laboratories found that 55 percent of the laboratories did not require informed consent prior to testing and 31 percent did not have a written policy on confidentiality (McGovern MM, *et al.* Quality assurance in molecular genetic testing laboratories. JAMA 1999;835–840). This same study found what the authors considered to be substandard laboratory practice, which could lead to adverse clinical outcomes, in 15 percent of the laboratories. In the post-analytic phase of testing, the Giardiello study reported that 31 percent of the cases were misinterpreted by the physician. The McGovern study found that 30 percent of laboratories did not provide access to genetic counseling.

These and other studies point to the need for improvements in laboratory practice and better coordination between the care provider, laboratory, genetic counselor, and the patient to ensure quality in genetic testing. The HHS has sought the advice of experts in laboratory medicine and genetic testing to help identify places in the testing process where testing problems are most likely to occur, and to determine what modifications to current CLIA regulations could provide greater assurance of accurate and reliable testing. Issues for which the laboratory might provide additional assistance to the laboratory user such as informed consent, counseling, and protecting confidentiality were also considered. The recommendations below were developed during a series of public meetings of the Clinical Laboratory Improvement Advisory Committee (CLIAC).

B. Current Roles of Government and Professional Organizations in Genetic Testing

In considering whether to create a genetic specialty under CLIA and whether to include the provisions recommended by the CLIAC, it is important to understand the current roles of government and professional organizations in genetic testing, and to note that no single agency or organization is likely to be able to address all of the issues raised by genetic testing.

Genetic tests are currently regulated at the Federal level through three mechanisms: (1) The Clinical Laboratory Improvement Amendments (CLIA); (2) the Federal Food, Drug, and Cosmetic Act; and (3) during investigational phases of test development, under applicable regulations for the Protection of Human Subjects (45 CFR 46, 21 CFR 50, and 21 CFR 56). In addition, some States regulate and private-sector organizations monitor genetic testing laboratories.

On October 31, 1988, Public Law 100–578, Clinical Laboratory Improvement Amendments of 1988 (CLIA), Section 353 of the Public Health Service Act, (42 U.S.C. 263a) was enacted. On February 28, 1992 (57 FR 7002), HHS published a final rule applicable to all laboratories that examine human specimens to provide information for the diagnosis, prevention, or treatment of any disease or impairment of, or assessment of the health of, human beings. (Note: Facilities that only perform testing for forensic purposes and research

laboratories that test human specimens but do not report patient specific results are exempt from the CLIA regulations.)

Under CLIA, laboratories are required to meet specific requirements before they can become CLIA-certified. Regulated tests are categorized according to their level of complexity: waived, moderate, and high complexity, with the regulatory requirements increasing in stringency with the complexity of the tests performed. Under CLIA, the Health Care Financing Administration (HCFA) in partnership with CDC develops standards for laboratory certification. The advice of the HHS Clinical Laboratory Improvement Advisory Committee (CLIAC) may also be sought. Laboratories performing non-waived tests receive on-site inspections conducted by HCFA or by designated organizations or State-operated CLIA programs.

Overall monitoring includes a comprehensive evaluation of the laboratory's operating environment, personnel, proficiency testing, quality control, and quality assurance. Laboratory directors are required to take specific actions to establish a comprehensive ongoing quality assurance program, which ensures that the performance of all steps in the testing process is accurate. Although laboratories under CLIA are responsible for all aspects of the testing process (from specimen collection through specimen analysis and reporting of the results), CLIA oversight emphasizes intralaboratory processes as opposed to the clinical uses of test results.

All laboratory testing devices, kits and their components are subject to FDA oversight under the Federal Food, Drug, and Cosmetic Act. Testing devices and tests that are packaged and sold as kits to multiple laboratories require premarket approval or clearance by the FDA. This premarket review involves an analysis of the device's accuracy as well as its analytical sensitivity and specificity. Premarket review is performed based on data submitted to FDA's scientific reviewers. In addition, for devices for which the link between clinical performance and analytical performance has not been well established, FDA requires additional analyses to determine the test's clinical characteristics, or its clinical sensitivity and specificity. In some cases, FDA requires that the predictive value of the test be analyzed.

The majority of new genetic tests are being developed by laboratories for their own use, that is, in-house tests. The FDA established a measure of regulation of in-house tests by instituting controls over the active ingredients (analyte-specific reagents) used by laboratories to perform tests. This regulation subjects reagent manufacturers to certain general controls, such as good manufacturing practices; however, with few exceptions, the current regulatory process does not require a premarket review of these reagents. The regulation requires that the sale of reagents be only to laboratories capable of performing high-complexity tests and requires that certain information accompany both the reagents and the test results. The labels for the reagents must also state that ''analytical and performance characteristics are not established.'' Also, the test results must identify the laboratory that developed the test and its performance characteristics and must include a statement that the test ''has not been cleared or approved by the U.S. FDA.'' In addition, the regulation prohibits direct marketing of in-house developed tests to consumers.

Human subjects participating in the research phase of development of a genetic test are under the protection of human research subjects regulations administered by the National Institutes of Health (NIH) and the FDA. NIH oversees the protection of human research subjects in HHS-funded research, while the FDA oversees the protection of human research subjects in trials of investigational (unapproved) devices, drugs, or biologics being developed for eventual commercial use. Fundamental requirements of these regulations are that experimental protocols involving human subjects be reviewed by an organization's Institutional Review Board (IRB) to assure the safety of the subjects and that risks do not outweigh potential benefits.

Some State agencies may monitor laboratories performing genetic testing, including licensure of personnel and facilities. In some instances, the State Public Health Laboratory and State-operated CLIA program are responsible for quality assurance activities. A few States, such as New York, have promulgated regulations that go beyond the requirements of CLIA. States also administer newborn screening programs and provide other genetic services through maternal and child health programs.

Private-sector organizations, in partnership with HCFA and CDC may also develop laboratory and clinical guidelines and standards. A number of organizations are involved in helping to assure the quality of laboratory practices and in developing clinical practice guidelines to ensure the appropriate use of genetic tests. These organizations include the College of American Pathologists (CAP), which develops standards for its membership and establishes and operates proficiency testing programs; the NCCLS (formerly called the National Committee on Clinical Laboratory Standards), which develops consensus recommendations for the standardization of test methodologies; and the American College of Medical Genetics (ACMG), which develops guidelines for the use of particular tests and test methodologies and works with the CAP to provide proficiency tests for certain genetic tests. Other organizations, such as the American Academy of Pediatrics, American College of Obstetrics and Gynecology, American Society of Human Genetics, and National Society of Genetic Counselors, are also involved in the development of guidelines and recommendations regarding the appropriate use of genetic tests.

Presently, no federal agency has specifically addressed other aspects of oversight that are critical to the appropriate use of a genetic test, including the clinical validity and clinical utility of a given test. Also not addressed are other important issues such as informed consent and genetic counseling.

C. Proposed Changes to CLIA Laboratory Regulations

Currently, CLIA has very specific requirements for certification of laboratories in areas such as cytology, microbiology, and clinical cytogenetics; a specialty category of genetics does not currently exist even though genetic testing is covered under the general provisions of CLIA. If a genetics specialty category is created, genetic testing will need to be defined (see definitions under question 1).

Recommendations of Clinical Laboratory Improvement Advisory Committee (CLIAC)

On September 11, 1997, January 29, 1998, May 28–29, 1998, September 17–18, 1998, and September 22–23, 1999 the CLIAC met to develop recommendations on how the CLIA regulation might be modified to address genetic testing. Summary accounts of the meetings at which these recommendations were developed can be found at the CDC website at *http://www.phppo.cdc.gov/dls/cliac/default.asp.* The CLIAC's deliberations provide definitions for laboratories performing genetic testing; address issues in the pre-analytic, analytic, and post-analytic phases of testing; and describe how a laboratory's responsibilities and those of the care

provider, genetics counselor, and individual being tested are related.

While these recommendations were developed by experts in the field of genetics and laboratory aspects of genetic testing, we are interested in determining the impact of imposing the specific requirements recommended by CLIAC on the wide spectrum services offered by the nation's 170,000 clinical laboratories. We are interested in determining which, if any, of these recommendations might prove problematic to low volume laboratories, which may be the only source of a specific genetic test. Finally, we are interested in receiving comments about whether implementing these recommendations would increase, decrease, or have no effect on the quality of, access to, or cost of genetic testing services.

Please note that genetic testing laboratories are already subject to the current personnel, quality assurance, quality control, and patient test management provisions of CLIA (42 CFR Part 493). Also note that the recommendations have been divided into topics which apply globally to all phases of genetic testing, and those specific to the pre-analytic, analytic, and post-analytic phases of testing.

While this Notice of Intent requests comments on a range of laboratory issues related to potential regulation of genetic testing recommended by the CLIAC, the Department has not yet determined whether the scope of CLIA will allow regulation of all of these issues.

CLIA Questions on Which Comment Is Being Solicited

The CLIAC has made recommendations on the issues listed below. We are interested in receiving comments on the following questions which arise when considering the adoption of these recommendations under the regulatory provisions of CLIA.

General Requirements

Note: These issues apply to more than one phase of the testing process.

1. Are the Following Definitions for Categories of Genetic Testing To Be Covered Under a New CLIA Specialty of Genetics Appropriate (or Too Broad or Too Restrictive)?

A. *Current CLIA Requirement:* A specialty of genetic testing has not been defined under CLIA. However, CLIA already applies to genetic testing since it regulates any laboratory that examines human specimens to provide information for diagnosis, prevention, or treatment of any disease or impairment of, or assessment of the health of, human beings.

B. *CLIAC Recommendation:* The CLIAC suggested that the following definitions for the specialty of genetic testing be adopted.

Molecular genetic and cytogenetic test—An analysis performed on human DNA, RNA, and chromosomes to detect heritable or acquired disease-related genotypes, mutations, phenotypes, or karyotypes for clinical purposes. Such purposes would include predicting risk of disease, identifying carriers, and establishing prenatal or clinical diagnoses or prognoses in individuals, families, or populations.

Biochemical genetic test—The analysis of human proteins and certain metabolites, which is predominantly used to detect inborn errors of metabolism, heritable genotypes, or mutations for clinical purposes. Such purposes would include predicting risk of disease, identifying carriers, and establishing prenatal or clinical diagnoses or prognoses in individuals, families, or populations. [Tests that are used primarily for other purposes, but may contribute to diagnosing a genetic disease (*e.g.* blood smear, certain serum chemistries), would not be covered by this definition.]

C. *Issue:* A genetic speciality will be linked to specific personnel qualifications and responsibility requirements, as well as proficiency testing and quality control provisions (see other recommendations which could also be implemented under the specialty). Therefore, inclusion or exclusion from the specialty could alter a laboratory's staffing plans, reimbursements, and overall costs.

2. What Is the Role of a Laboratory Director in Documenting the Clinical Validity of a Genetic Test Their Laboratory Plans To Offer? If There is a Role, How Should the Laboratory Director's Documentation of the Clinical Validity of a Genetic Test Be Monitored?

A. *Current CLIA Requirement:* Under 493.1407 Standard; Laboratory director responsibilities, (e) the laboratory director must ensure that testing systems developed and used for each of the tests performed in the laboratory provide quality laboratory services for all aspects of test performance, which includes the pre-analytic, analytic, and post-analytic phases of testing, ensure that the test methodologies selected have the capability of providing the quality of results required for patient care, and ensure that verification procedures used are adequate. Under 493.1213 Standard; establishment and verification of method performance specifications, prior to reporting patient test results the laboratory must verify or establish for each method, the performance specifications for: accuracy; precision; analytical sensitivity and specificity, if applicable; the reportable range of patient test results; the reference range; and any other applicable performance characteristics.

B. *CLIAC Recommendation:* Although the CLIAC considered the scope of the current laboratory director responsibilities to be adequate, they were concerned about how to monitor the laboratory director's documentation of the clinical validity for the tests performed. The CLIAC recommended adding specific requirements for analytical and clinical validation of tests (see question 7 below).

C. *Issue:* Although there are specific requirements for analytic validation, no specific requirements for clinical validation have been included under CLIA. Clinical validation of all tests, such as cholesterol, has been assumed to have been documented before tests are offered. Concerns about requiring specific documentation of the clinical validity of genetic tests have been expressed, with some expressing the view that establishing the clinical validity and documenting it for the tests offered are outside of the laboratory's purview.

3. Who Should Be Authorized To Order a Genetic Test?

A. *Current CLIA Requirement:* Under 493.1105 Standard; Test requisition—the laboratory must perform tests only at the written or electronic request of an authorized person.

Note: Under 493.2 Definitions—An authorized person means an individual authorized under State law to order tests or receive results, or both.

B. *CLIAC Concern:* The CLIAC raised the issue that some States provide no guidance on this issue.

C. *Issue:* Is genetic testing sufficiently different from other types of laboratory testing to warrant a new Federal requirement to define who is authorized to order a genetic test?

4. Should the Laboratory Be Required to Document That Informed Consent Has Been Obtained by an Authorized Person From the Person Being Tested Before Performing Certain Genetic Tests or Types of Tests (Screening, Diagnostic, Carrier, Presymptomatic, Susceptibility)?

A. *Current CLIA Requirement:* CLIA, at present, does not specifically require a laboratory to document that an informed consent has been obtained by

an authorized person before testing is performed.

B. *CLIAC Recommendation:* The CLIAC recommended the following guidance on this issue.

• Because of the sensitive nature of certain genetic tests, the laboratory must have assurance that the ''authorized'' person has obtained informed consent.

• At the request of the ''authorized'' person, the laboratory shall assist in developing appropriate informed consent for the particular test, including the limitations and consequences of the test results.

Note: The National Bioethics Advisory Commission in its August 1999 report on ''Research Involving Human Biological Materials: Ethical Issues and Policy Guidance'' provides guidance to *research laboratories,* which are exempt from CLIA if they do not report patient specific results. These recommendations do not apply to clinical interventions, quality control, or teaching, but only to ''a systematic investigation designed to develop or contribute to generalizable knowledge.''

C. *Issue:* Imposition of this requirement on laboratories could serve to protect patients from inappropriate testing, but increases the laboratory burden of documentation and could also delay obtaining genetic testing results. Are the CLIA regulations an appropriate place for regulating informed consent related to genetic testing? Also, how do current State medical consent laws factor into this?

5. Should Additional Processes Be in Place to Enhance the Confidentiality of Certain Genetic Test Information and Results?

A. *Current CLIA Requirement:* Under 493.1109 Standard; Test report, (a)—the laboratory must have adequate systems in place to report results in a timely, accurate, reliable, and confidential manner, and, ensure patient confidentiality throughout those parts of the testing process that are under the laboratory's control.

B. *CLIAC recommendation:* The CLIAC recommended the following guidance on this issue.

• Due to the sensitive nature of certain genetic test results, the laboratory must have a policy in place to protect the confidentiality of test result reporting.

• All requests for additional tests must follow confidentiality and informed consent requirements (see above).

Note: HHS under the Health Insurance and Portability and Accountability Act (HIPAA) published in the **Federal Register** on November 3, 1999 a proposed rule Standards for Privacy of Individually Identifiable Health Information. This rule applies to individually-identifiable health information that has been electronically transmitted or maintained. The NPRM is accessible at (http://www.aspe.hhs.gov/admnsimp/).

C. *Potential implication of the CLIAC issue:* This would not impose an additional requirement on laboratories, but would clarify that a policy must be in place for the genetic specialty. Is being this explicit for genetic testing necessary?

6. Assuming That a Genetic Specialty Under CLIA Is Defined and Recognized, Should a Laboratory Covered Under This Specialty Be Required To Provide Genetic Counseling to Their Clients (Including Medical Care Providers and Patients), for the Tests They Offer?

A. *Current CLIA Requirement:* Under 493.1419/493.1457 Standard; Clinical Consultant responsibilities—laboratories are required to have a qualified clinical consultant to provide consultation regarding the appropriateness of the testing ordered and interpretation of test results. The consultant must be available to provide consultation and to assist in ensuring that appropriate tests are ordered to meet clinical expectations, and ensure that reports of test results include pertinent information required for specific patient interpretation, and that matters related to the quality of test results are communicated.

B. *CLIAC Recommendation:* The CLIAC recommended that the qualifications and responsibilities of the clinical consultant be expanded to assure that someone associated with the laboratory be capable of providing genetic counseling to the laboratory's clients (care providers, patients, individuals, etc.).

Clinical Consultant—Be an M.D., D.O., and have two years experience in genetic testing.; or hold a Ph.D. in a relevant discipline, be Board certified, and have two years experience in genetic testing; or hold an MS in Genetic Counseling, be Board certified, and have two years experience in genetic testing (prospective).

Clinical Consultant—For genetic testing, require that the Clinical Consultant assist clients in ordering appropriate tests to meet clinical needs.

C. *Issues:* Will there be a sufficient number of qualified clinical consultants available and is the experience mentioned necessary for all types of genetic tests? Will care providers request/accept assistance in ordering genetic tests? What should the role of the laboratory be in counseling providers and/or patients. Does it extend to family members?

Requirements Related to Specific Phases of the Testing Process

These issues apply to one phase of the testing process.

7. Should the Following Requirements Be Added Under a Specialty of Genetics to CLIA To Address Unique Aspects of Laboratory Responsibility for Genetic Testing?

Pre-Analytic Phase

Obtaining Clinical Information on the Test Requisition and the Ordering of Additional Tests

A. *Current CLIA Requirement:* Under 493.1419/493.1457; Standard; Clinical Consultant responsibilities—laboratories are required to have a qualified clinical consultant to provide consultation regarding the appropriateness of the testing ordered and interpretation of test results. The consultant must be available to provide consultation and to assist in ensuring that appropriate tests are ordered to meet clinical expectations, and ensure that reports of test results include pertinent information required for specific patient interpretation, and that matters related to the quality of test results are communicated. Also under 493.1105, Standard; Test Requisition, (f)—the laboratory must assure that the requisition or test authorization includes any additional information relevant and necessary to a specific test to assure accurate and timely testing and reporting.

B. *CLIAC recommendation:* Test Requisition and ordering additional tests:

• Appropriate clinical information to ensure accurate and reliable genetic testing must be provided with the test request.

Note: In some instances very explicit information may be required to decide which test method to use and to appropriately interpret the results. Such information would include all that is relevant and necessary to ensure accurate and timely testing, interpretation and reporting of results and elements to ensure proper identification of the subject being tested. Relevant information for a genetic test may include date of birth, gender, ethnicity, and/or family history)

• When deemed necessary, the laboratory shall assist those ordering tests by suggesting follow-up tests, when appropriate, to expedite the function of obtaining relevant clinical information.

Re-Use of Tested Specimens.

• When patient identifiers are not removed from the specimens, informed consent must be obtained prior to re-use of previously tested specimens for quality control (QC) and quality assurance (QA) purposes.

• When the laboratory intends to re-use previously tested specimens without patient identifiers for QC and QA, it must have a procedure that permits patients with a personal objection to other uses of their specimen to be able to elect not to have their specimen used for these purposes.

• The use of a retained sample does not require informed consent if all identifiers are removed and the patient has had an opportunity to decline being tested.

C. *Issue.* The laboratory may require additional patient information in order to make decisions about which specific tests or additional tests would be most useful to provide the needed clinical information. However, this information may be difficult to obtain in every instance. With respect to additional testing, coverage or payment for testing may be an issue. The conditions under which testing specimen may be re-used for quality control is generally accepted as good laboratory practice, but not explicitly provided for under current requirements.

Analytic Phase

Personnel Qualifications

A. *Current CLIA Requirement:* Under Subpart M—Personnel for High Complexity Testing:

Laboratory Director—Be an M.D. or D.O. or DPM with certification in clinical and/or anatomic pathology; or be a Ph.D. and be certified by a board approved by HHS; or be an M.D. or D.O. and have two years directing or supervising high complexity testing; or hold a doctorate degree in a chemical, physical, biological, or clinical laboratory science, be certified, and have two years of supervisory experience in high complexity testing; or be grandfathered.

Technical Supervisor—Although no genetic specialty currently exists, the following technical supervisor requirements apply to the specialty of cytogenetics.—Be an M.D., D.O. or DPM with four years of training or experience in genetics, two of which have been in clinical cytogenetics; of Ph.D. with four years of training or experience in genetics, two of which have been in clinical cytogenetics.

General Supervisor—Be qualified as a laboratory director or technical supervisor; or be an M.D., D.O., DPM, or have a Doctorate, Masters or Baccalaureate degree in a chemical, physical, biological or clinical laboratory science, and have one year training or experience in high complexity testing; or have an Associate degree, or equivalent, in a chemical, physical, biological or clinical laboratory science and have two years training or experience in high complexity testing; or be grandfathered.

Clinical Consultant—Be qualified as a laboratory director or be an M.D., D.O., DPM and licensed to practice medicine in the State in which the laboratory is located.

B. *CLIAC recommendation:* To the current requirements listed above, add the following:

Laboratory Director—Be an M.D. or D.O. or DPM with certification in clinical and/or anatomic pathology; or be an M.D., D.O., or Ph.D. and be certified in medical genetics by a board approved by HHS; or be an M.D. or D.O. and have two years directing or supervising high complexity testing; or hold a doctorate degree in a chemical, physical, biological, or clinical laboratory science, be certified, and have two years of supervisory experience in high complexity testing; or be grandfathered

If a genetic specialty is developed, the CLIAC recommended the following personnel qualifications.

Technical Supervisor—Be an M.D. or D.O. with certification in clinical and/or anatomic pathology plus two years sub-specialty training in genetics and have two years supervisory experience in high complexity genetic testing, or have four years supervisory experience in high complexity genetic testing in the relevant subspecialty; or be an M.D., D.O. or Ph.D. and be certified in the appropriate medical genetics specialty and have two years experience directing or supervising high complexity genetic testing in the relevant subspecialty; or hold a doctorate degree in a chemical, physical, biological, or clinical laboratory science, and have four years of training or supervisory experience in high complexity genetic testing in the relevant subspecialty; or be grandfathered.

General Supervisor—Be qualified as a laboratory director or technical supervisor; or be an M.D., D.O., hold a Doctorate or Masters degree in a chemical, physical, biological or clinical laboratory science, and have two years experience in high complexity genetic testing; or hold a Baccalaureate degree in a chemical, physical, biological or clinical laboratory science and have three years experience in high complexity genetic testing; or be grandfathered.

Clinical Consultant—Be an M.D., D.O., and have two years experience in genetic testing.; or hold a Ph.D. in a relevant discipline, be Board certified, and have two years experience in genetic testing; or hold an MS in Genetic Counseling, be Board certified, and have two years experience in genetic testing (prospective).

C. *Issue:* Could assure higher quality in genetic testing, but could restrict who could serve in these personnel categories. The extent of the impact is dependent upon the tests included in the definition of the genetic specialty.

Personnel Responsibilities

A. *Current CLIA Requirements:* See Subpart M of 42 CFR Part 493.

B. *CLIAC Recommendations.* To the current requirements, add the following:

Technical Supervisor—The Technical Supervisor (in addition to the Laboratory Director and Clinical Consultant currently required under CLIA) must ensure that reports include pertinent information required for clinical interpretation that is meaningful to a non-geneticist health care provider.

Clinical Consultant—For genetic testing, require that the Clinical Consultant assist clients in ordering appropriate tests to meet clinical needs.

C. *Issue:* Could assure higher quality in genetic testing, but could be difficult for all laboratories to acquire the personnel with the skills needed.

Quality Control and Patient Test Management

A. *Current CLIA Requirement.* Under 493.1105 Standard; Test requisition and 493.1107 Standard; Test records a laboratory must ensure that the requisition or test records include patient's name or unique identifier and laboratory number; date of collection and receipt in the laboratory. Under 493.1213 Standard; establishment and verification of method performance specifications, prior to reporting patient test results the laboratory must verify or establish for each method, the performance specifications for: accuracy; precision; analytical sensitivity and specificity, if applicable; the reportable range of patient test results; the reference range; and any other applicable performance characteristics.

B. *CLIAC Recommendation.* The CLIAC recommended that the following new provisions be added:

Quality Control/Contamination

• A specimen should be stabilized until the clinical information for accurate testing is available.

• The laboratory must be designed to minimize contamination.

• Amplification procedures which are not in wholly closed systems must have separation between preparative and post-amplification steps.

• Work processes must minimize risk of mixing samples, and risk of

contamination of equipment, reagents, and/or supplies.

• RNA work areas must be separated from DNA work areas.

Specimen Integrity

• Requirements to ensure identification of the subject being testing include: date of birth; gender; ethnicity; patient or family number; specimen source; time of collection; and name of person obtaining sample

Validation of Tests

Analytic validation:

• Laboratories must verify or establish reproducibility for each method within and between runs, and between technologists.

• Methodology must be appropriate for conditions being evaluated.

• Quality control parameters must be applicable.

• Reagents must be validated.

Clinical Validation: Laboratories must consider the following clinical parameters for test validation:

• A positive confirmatory test must have a defined positive predictive value which can be communicated to the care giver.

• Where the disease prevalence is more frequent than 1/10,000, the validity must be documented in at least 10 positive probands (including cell lines or DNA/RNA) prior to offering the test.

• Predictive value should be defined in terms of ethnic populations, when applicable

C. *Issue:* These recommendations are based on what the CLIAC considers to be good laboratory practice in genetic testing. They represent extensions to existing requirements to specifically address some of the unique aspects of genetic testing. Are these sufficiently comprehensive, adequate, or are they not needed?

Proficiency Testing (PT)

A. *Current CLIA Requirement:* Under 493.801 Condition; Enrollment and testing of samples—a laboratory must enroll in an approved proficiency testing program for each specialty for which it seeks certification. Currently, no PT requirement exists, because there is no genetic specialty, therefore the following PT requirement applies. Under 493.1703 Standard; Comparison of test results—when a laboratory performs tests for which PT is unavailable, the laboratory must have a system for verifying the accuracy and reliability of its test results at least twice a year.

B. *CLIAC Recommendation:* The CLIAC recommended including the following new provision:

• When an approved PT program does not exist for the test, the regulations should require alternatives (to be performed three times per year, on five specimens per event). Examples include: Split samples sent to another laboratory; blinded test samples; test samples in duplicate by separate technologists, in a blinded manner; and other equivalent approaches

C. *Issue:* Requiring PT would provide a basis for evaluating the accuracy of genetic testing.

Post-Analytic Phase

Special Reporting Requirements

A. *Current CLIA Requirement:* Under 493.1109 Standard; Test report—a laboratory must, upon request, make available to clients a list of test methods and information that may affect the interpretation of test results, such as interferences.

B. *CLIAC Recommendation:* Laboratory reports must include the following, as applicable, as they relate to the interpretation of the test result:

—Interpretation.

—Comments.

—Recommendations for further testing or clinical consultation.

—Summary of the test method and its limitations.

• When individual interpretation of the test result is required, the signature of the Director or designee must appear on the report.

• A means to quickly contact the Laboratory Director/Technical Supervisor, in addition to address, must be indicated on the report.

• Any reference to family members in a test report must utilize standardized pedigree nomenclature or numeric indicators, instead of individual names.

• Specific requirements for reporting molecular genetic testing include:

—A list of the mutant alleles tested.

—The rate detection of the panel.

— A revised assessment of likelihood based on test results, as applicable.

—Important clinical implications for other family members should be provided, as applicable.

—Variables that affect test interpretation (*e.g.* ethnicity) must be specified in the report, and limitations of the testing must be defined.

C. *Issue:* Requiring laboratories to provide this information could increase the accuracy of interpretation of genetic testing reports, but may increase the laboratories' burden.

Record/Specimen Retention

A. *Current CLIA Requirement:* Under 493.1109 Standard; Test report—the laboratory must retain the original or an exact duplicate of each test report for a period of at least two years after the date of reporting.

B. *CLIAC Recommendation:*

• Copies of patient reports of genetic testing shall be retrievable for a minimum of 10 years, or longer if required by State law. Electronic reports are acceptable.

• The laboratory must have a policy defining specimen retention policies.

C. *Issue:* Maintaining reports for a longer period of time may be beneficial but this could be burdensome.

Dated: April 27, 2000.

Jeffrey Koplan,

Director, Centers for Disease Control and Prevention.

[FR Doc. 00–11093 Filed 5–3–00; 8:45 am]

BILLING CODE 4163–18–P

DEPARTMENT OF HEALTH AND HUMAN SERVICES

Centers for Disease Control and Prevention

[Program Announcement 00107]

Population-Based Surveillance of Autism Spectrum Disorders and Other Developmental Disabilities; Notice of Availability of Funds

A. Purpose

The Centers for Disease Control and Prevention (CDC) announces the availability of fiscal year (FY) 2000 funds for a cooperative agreement program for Population-Based Surveillance of Autism Spectrum Disorders and other Developmental Disabilities. CDC is committed to achieving the health promotion and disease prevention objectives of ''Healthy People 2010.'' This announcement is related to the focus area of Maternal, Infant and Child Health. http://www.health.gov/healthypeople.

The purpose of the program is to: Enhance an existing system or develop and implement a new system to undertake a multiple source surveillance methodology, from existing data records, for determining the prevalence of autism and other developmental disabilities, such as mental retardation, cerebral palsy, and vision and hearing impairments, in 3–10 year-old children within a geographically-defined area (combination of States, Statewide, or regions within a State).

B. Eligible Applicants

Assistance will be provided only to the health departments of States or their

bona fide agents, including the District of Columbia, the Commonwealth of Puerto Rico, the Virgin Islands, the Commonwealth of the Northern Mariana Islands, American Samoa, Guam, federally recognized Indian tribal governments, the Federated States of Micronesia, the Republic of the Marshall Islands, and the Republic of Palau.

Applicants must document a surveillance population of at least 30,000 live per births per year within a State, area of a state (such as the catchment of a local health agency), or a combination of States.

Note: Only one application will be accepted from each State or combination of States, and the latter must specify which State is the lead applicant.

C. Availability of Funds

Approximately $300,000 is available in FY 2000 to fund two awards. Each award is expected to be approximately $150,000. It is expected that the awards will begin on or about September 30, 2000, and will be made for a 12-month budget period within a project period of five years. Funding estimates may change.

Continuation awards within an approved project period will be made on the basis of satisfactory progress as evidenced by required reports and the availability of funds.

D. Program Requirements

In conducting activities to achieve the purpose of this program, the recipient will be responsible for the activities under 1. (Recipient Activities), and CDC will be responsible for the activities listed under 2. (CDC Activities).

1. Recipient Activities

a. To develop or enhance a surveillance program for autism and other developmental disabilities:

i. Develop surveillance case definition(s);

ii. Develop multiple source surveillance methodology; and

iii. Develop data collection instruments and methods for obtaining information from medical/clinical and school records.

b. Establish a multiple-source methodology to ascertain cases of autism and generate population-based prevalence estimates by developing collaborative relationships with appropriate professionals and organizations.

c. Develop a plan for training community service providers to improve case ascertainment.

d. Implement quality assurance procedures, including clinical validation of diagnoses in a sample of cases, to ensure that study protocols are being followed.

e. Develop an evaluation plan for estimating the completeness of the surveillance system.

f. Compile and disseminate the findings of the project.

2. CDC Activities

a. Assist recipient in the development and implementation of surveillance activities including the development of a standardized surveillance case definition.

b. Provide current scientific information on surveillance methods.

c. Provide assistance in the development of an evaluation plan for the completeness of the surveillance system.

E. Application Content

Use the information in the Program Requirements, Other Requirements, and Evaluation Criteria sections to develop the application content. Your application will be evaluated on the criteria listed, so it is important to follow them in laying out your program plan. The narrative should be no more than 25 double-spaced pages, printed on one side, with one inch margins, unreduced font, unbound, and unstapled.

F. Submission and Deadline

Application

Submit the original and two copies of PHS 5161–1 (OMB Number 0937–0189). Forms are in the application kit.

On or before July 7, 2000, submit the application to the Grants Management Specialist identified in the ''Where to Obtain Additional Information'' section of this announcement. *Deadline:* Applications shall be considered as meeting the deadline if they are either:

(a) Received on or before the deadline date; or

(b) Sent on or before the deadline date and received in time for submission to the Objective Review Panel. (Applicants must request a legibly dated U.S. Postal Service postmark or obtain a legibly dated receipt from a commercial carrier or U.S. Postal Service. Private metered postmarks shall not be acceptable as proof of timely mailing.)

Late Applications: Applications which do not meet the criteria in (a) or (b) above are considered late applications, will not be considered, and will be returned to the applicant.

G. Evaluation Criteria

Each application will be evaluated individually against the following criteria by an independent review group appointed by CDC.

1. Understanding of the Problem (20 Percent)

(a) The extent to which the applicant has a clear, concise understanding of the requirements, objectives, and purposes of the cooperative agreement.

(b) The extent to which the application reflects an understanding of the complexities of autism and developmental disabilities surveillance.

2. Technical Approach (30 Percent)

The extent to which the applicant describes the planning process, including specific planning objectives, strategies for achieving these objectives, and describes an approach to surveillance of autism and other developmental disabilities. The applicant should demonstrate its collaboration with health and education services that would be appropriate sources of cases for the surveillance system (by letters of support). The degree to which the applicant has met the CDC policy requirements regarding the inclusion of women, ethnic, and racial groups in the proposed research. This includes:

(a) The proposed plan for the inclusion of both sexes and racial and ethnic minority populations for appropriate representation.

(b) The proposed justification when representation is limited or absent.

(c) A statement as to whether the design of the study is adequate to measure differences when warranted.

(d) A statement as to whether the plans for recruitment and outreach for study participants include the process of establishing partnerships with communities and recognition of mutual benefits.

3. Capability and Experience (30 Percent)

The extent to which the applicant has the professed skills and experience to conduct a project of this nature, including reputation in the field and demonstrated experience in conducting similar projects.

4. Staffing and Management Resources (20 Percent)

The extent to which the applicant demonstrates that the proposed Project Director or Principal Investigator is knowledgeable regarding autism, developmental disabilities, and surveillance issues, as evidenced by publications, presentations, or other materials that document prior work. The extent to which the applicant demonstrates that other project staff

have appropriate training and experience in the field of autism, other developmental disabilities, and surveillance activities, as evidenced by publications, presentations, or other materials that document prior work. Demonstration of the ability to provide adequate facilities and other necessary resources to carry out all proposed activities.

5. Budget (Not Scored)

The extent to which the budget is reasonable, clearly justified, and consistent with the stated objectives and proposed activities.

6. Human Subjects Requirements (Not Scored)

The extent to which the applicant complies with the Department of Health and Human Services regulation (45 CFR part 46) on the protection of human subjects.

H. Other Requirements

Technical Reporting Requirements

Provide CDC with original plus two copies of:

1. Semi-annual reports, no more than 30 days after the end of the report period;
2. Financial status report, no more than 90 days after the end of the budget period; and
3. Final financial status and performance reports, no more than 90 days after the end of the project period.

Send all reports to the Grants Management Specialist identified in the ''Where to Obtain Additional Information'' section of this announcement.

The following additional requirements are applicable to this program. For a complete description of each, see Attachment I in the application kit.

AR–1 Human Subjects Requirements
AR–2 Requirements for Inclusion of Women and Racial and Ethnic Minorities in Research
AR–7 Executive Order 12372 Review
AR–9 Paperwork Reduction Act Requirements
AR–10 Smoke-Free Workplace Requirements
AR–11 Healthy People 2010
AR–12 Lobbying Restrictions

I. Authority and Catalog of Federal Domestic Assistance Number

This program is authorized under sections 301 and 317 of the Public Health Service Act, [42 U.S.C. sections 241 and 247b, as amended]. The Catalog of Federal Domestic Assistance number is 93.283.

J. Where To Obtain Additional Information

This and other documents may be downloaded through the CDC homepage on the Internet at http://www.cdc.gov (click on funding).

Please refer to Program Announcement 00107 when you request information. For business management technical assistance, please contact: Mattie B. Jackson, Grants Management Specialist, Grants Management Branch, Procurement and Grants Office, Centers for Disease Control and Prevention, 2920 Brandywine Road, Room 3000, Atlanta, GA 30341–4146, Telephone number: 770/488–2718, Email address: mij3@cdc.gov.

For program technical assistance, contact: Tom Horne, Principal Management Officer, Developmental Disabilities Branch, National Center for Environmental Health, Centers for Disease Control and Prevention (F–15), 4770 Buford Hwy, NE, Atlanta, GA 30341, Telephone: 770/488–7364, Email address: tjh1@cdc.gov.

Dated: April 28, 2000.

John L. Williams,

Director, Procurement and Grants Office, Centers for Disease Control and Prevention (CDC).

[FR Doc. 00–11092 Filed 5–3–00; 8:45 am]

BILLING CODE 4163–18–P

DEPARTMENT OF HEALTH AND HUMAN SERVICES

Centers for Disease Control and Prevention

[Program Announcement 00103]

C. Everett Koop Community Health Information Center—A National Model for Physician-Based Community Health Information Centers; Notice of Availability of Funds

A. Purpose

The Centers for Disease Control and Prevention (CDC) announces the availability of fiscal year (FY) 2000 funds for a grant program entitled ''C. Everett Koop Community Health Information Center—A National Model for Physician-based Community Health Information Centers.''

CDC is committed to achieving the health promotion and disease prevention objectives of ''Healthy People 2010'' a national activity to reduce morbidity and mortality and improve the quality of life. This program addresses the ''Healthy People 2010'' focus area of Health Communication.

For the conference copy of ''Healthy People 2010,'' visit the internet site: http://www.health.gov/healthypeople.

The purpose of the program is to strengthen the C. Everett Koop Community Health Information Center (CHIC) by (1) conducting a follow-up evaluation of CHIC as an effective model for other community health information centers, (2) disseminating the results of the evaluation to professional medical societies nationwide, and (3) conducting a final assessment of the dissemination and use of the model in other communities.

B. Eligible Applicants

Assistance will be provided only to the C. Everett Koop Community Health Information Center, Philadelphia College of Physicians, Philadelphia, PA. No other applications are solicited. The sole source justification is based on congressional language in fiscal year 2000 CDC Appropriation, which provides earmarked funding for the C. Everett Koop Community Health Information Center in Philadelphia, PA.

Note: Public Law 104–65 states that an organization described in section 501(c)(4) of the Internal Revenue Code of 1986 that engages in lobbying activities is not eligible to receive Federal funds constituting an award, grant, cooperative agreement, contract loan, or any other form.

C. Availability of Funds

Approximately $200,000 is available in FY 2000 to fund the C. Everett Koop Community Health Information Center. It is expected that the award will begin on or about September 30, 2000, and will be made for a 12-month budget period within a project period of three years. Funding estimates may change.

Continuation awards within an approved project period will be made on the basis of satisfactory progress as evidenced by required reports and the availability of funds.

D. Program Requirements

In conducting activities to achieve the purpose of this program, the recipient will be responsible for the following:

1. Strengthening the CHIC program by fully implementing the recommendations of the 1999 evaluation related to (a) marketing, promotion, and visibility, (b) resources, and (c) accessibility (See attachment I for recommendations).
2. Encouraging community involvement by developing a network of partners in providing current, complete, and comprehensive health information, and in increasing awareness of the availability of information resources.
3. After the recommendations have been fully implemented, developing a

plan for a follow-up evaluation of the CHIC program.

4. Establishing an advisory committee to plan for the dissemination of the evaluation results nationwide.

5. Analyzing data, implementing recommendations from the follow-up evaluation, disseminating the evaluation results to similar medical societies nationwide, and a followup assessment of the dissemination of and use of the model in other communities in years two and three.

E. Application Content

Application

Use the information in the Program Requirements, Other Requirements, and Evaluation Criteria sections to develop the application content. Your application will be evaluated on the criteria listed, so it is important to follow them in laying out your program plan. The narrative should be no more than 20 double-spaced pages, printed on one side, with one inch margins, and unreduced font.

F. Submission and Deadline

Submit the original and two copies of the application PHS Form 398 (OMB Number 0925–0001) (adhere to the instructions on the Errata Instruction Sheet for PHS 398). Forms are available at the following Internet address: www.cdc.gov/. Forms, or in the application kit. On or before June 1, 2000, submit the application to the Grants Management Specialist identified in the ''Where to Obtain Additional Information'' section of this announcement.

Deadline: The application shall be considered as meeting the deadline above if it is either:

(a) Received on or before the deadline date; or

(b) Sent on or before the deadline date.

(Applicant must request a legibly dated U.S. Postal Service postmark or obtain a legibly dated receipt from a commercial carrier or the U.S. Postal Service. Private metered postmarks shall not be acceptable as proof of timely mailing.)

Late Applications: Applications which do not meet the criteria in (a) or (b) above are considered late applications, will not be considered, and will be returned to the applicant.

G. Evaluation Criteria

The application will be evaluated by an objective review panel based on the following criteria:

Background (10 Points)

The extent to which the applicant demonstrates an understanding of the current literature and theories relevant to the proposed activities.

Program Plan (40 Points)

1. The extent to which the overall program plan has clear objectives that are specific, measurable, and realistic. (10 points)

2. The extent to which the proposed program activities are well-specified, achievable, time-phased, and consistent with the proposed objectives. (10 points)

3. The extent to which the proposed research methods (*e.g.,* data collection, outcome measures, data analyses, etc.) are clear and appropriate, have scientific merit, and are consistent with proposed objectives and activities. (10 points)

4. The degree to which the applicant has met the CDC policy requirements regarding the inclusion of women, ethnic and racial groups in the proposed research. This includes:

a. The proposed plan for the inclusion of both sexes and racial and ethnic minority populations for appropriate representation.

b. The proposed justification when representation is limited or absent.

c. A statement as to whether the design of the study is adequate to measure differences when warranted. (10 points).

Evaluation Plan (20 Points)

The quality of the plan to evaluate the overall project as well as specific program activities in regard to progress, efficacy, and cost benefits.

Collaborations (20 Points)

1. The extent to which the applicant has described a plan for establishing and gathering input from an advisory committee that includes experts with expertise critical to the success of the project. (10 points)

2. The extent to which the applicant has described a plan for establishing collaborative relationships with appropriate organizations, individuals, federal, state, and local health and education agencies to implement and evaluate the proposed activities. (10 points)

Management and Staffing Plan (10 Points)

The extent to which the applicant demonstrates the scientific expertise and capacity to carry out the program objectives and specific project plan.

Budget (Not Scored)

The extent to which the budget and justification are consistent with program objectives and purpose.

Human Subjects (Not Scored)

If the proposed project involves human subjects, whether or not exempt from the Department of Health and Human Services (DHHS) regulations, the extent to which adequate procedures are described for the protection of human subjects.

H. Other Requirements

Technical Reporting Requirements

Provide CDC with original plus two copies of:

1. Progress reports (annual);

2. Financial status report, not more than 90 days after the end of the budget period; and

3. Final financial status and performance reports, no more than 90 days after the end of the project period.

Send all reports to the Grants Management Specialist identified in the ''Where to Obtain Additional Information'' section of this announcement.

The following additional requirements are applicable to this program. For a complete description of each, see Attachment II in the application kit.

AR–1 Human Subjects Requirements
AR–2 Requirements for Inclusion of Women and Racial and Ethnic Minorities in Research
AR–7 Executive Order 12372 Review
AR–8 Public Health System Reporting Requirements
AR–9 Paperwork Reduction Act Requirements
AR–10 Smoke-Free Workplace Requirements
AR–11 Healthy People 2010
AR–12 Lobbying Restrictions

I. Authority and Catalog of Federal Domestic Assistance Number

This program is authorized under sections 301(a), 317(k)(2) and 1706 [42 U.S.C. 241(a), 247(k)(2) and 300u–5] of the Public Health Services Act, as amended. The Catalog of Federal Domestic Assistance number is 93.135.

J. Where To Obtain Additional Information

This announcement and other CDC program announcements can be found on the CDC home page Internet—http://www.cdc.gov. Click on ''Funding'' then ''Grants and Cooperative Agreements.''

To obtain additional information contact: Cynthia Collins, Grants Management Specialist, Grants

Management Branch, Procurement and Grants Office, Centers for Disease Control and Prevention (Centers for Disease Control), 2920 Brandywine Road, Room 3000, Atlanta, GA 30341–4146, Telephone (770) 488–2757, E-mail address:coc9@cdc.gov.

For program technical assistance, contact: Elijah West, National Center for Chronic Disease Prevention and Health Promotion, Centers for Disease Control and Prevention (CDC), 4770 Buford Highway, NE., Mailstop K–44, Atlanta, GA 30341–3724, Telephone 404–488–5549, E-mail address:ejw1@cdc.gov.

Dated: April 28, 2000.

Henry S. Cassell, III,

Acting Director, Procurement and Grants Office, Center for Disease Control And Prevention (CDC).

[FR Doc. 00–11094 Filed 5–3–00; 8:45 am]

BILLING CODE 4163–18–P

DEPARTMENT OF HEALTH AND HUMAN SERVICES

Food and Drug Administration

[Docket No. 00N–1220]

The Future of the International Conference on Harmonization of Technical Requirements for the Registration of Pharmaceuticals for Human Use (ICH); Notice of Public Meeting

AGENCY: Food and Drug Administration, HHS.

ACTION: Notice of public meeting.

SUMMARY: The Food and Drug Administration (FDA) is announcing a public meeting entitled ''The Future of the International Conference on Harmonization of Technical Requirements for the Registration of Pharmaceuticals for Human Use'' to solicit information and receive comments on the future of the ICH. The purpose of the meeting is to solicit public input prior to the next Steering Committee meeting in Brussels, Belgium, July 2000, at which discussion of the future of the ICH will be continued.

DATES: The public meeting will be held on May 16, 2000, from 10 a.m. to 2 p.m. Registration must be received by May 9, 2000. Written and electronic comments regarding the public meeting must be submitted by May 20, 2000.

ADDRESSES: The public meeting will be held in the Center for Drug Evaluation and Research, Advisory Committee Conference Room, 5630 Fishers Lane, rm. 1066, Rockville, MD 20857.

Written submissions must be sent to the Dockets Management Branch, Food and Drug Administration, 5630 Fishers Lane, rm. 1061, Rockville, MD 20852. Two copies of any written comments are to be submitted, except that individuals may submit one copy. Comments are to be identified with the docket number found in brackets in the heading of this document. Electronic submissions must be sent to the Dockets Management Branch at http://www.fda.gov/scripts/oc/dockets/comments/commentsmain.cfm.

FOR FURTHER INFORMATION CONTACT: Kimberly L. Topper, Center for Drug Evaluation and Research (HFD–21), Food and Drug Administration, 5600 Fishers Lane, Rockville, MD 20857, 301–827–7001, FAX 301–827–6801, or e-mail: Topperk@cder.fda.gov.

Registration: There is no registration fee for this public meeting, but registration by May 9, 2000, is required. Participation is limited to the first 140 registrants due to limited space. FDA employees are required to register to attend the meeting. Interested persons may register with the contact person via e-mail at: topperk@cder.fda.gov or fax 301–827–6801 and provide the following information: Name, affiliation, address, phone, fax, and e-mail address. Interested persons may also register by mail with the contact person (address above).

SUPPLEMENTARY INFORMATION:

I. Background

The ICH was established in 1990 as a joint regulatory/industry project to improve, through harmonization, the efficiency of the process for developing and registering new medicinal products in Europe, Japan, and the United States without compromising the regulatory obligations of safety and effectiveness.

In recent years, many important initiatives have been undertaken by regulatory authorities and industry associations to promote international harmonization of regulatory requirements. FDA has participated in many meetings designed to enhance harmonization and is committed to seeking scientifically based harmonized technical procedures for pharmaceutical development. One of the goals of harmonization is to identify and then reduce differences in technical requirements for medical product development among regulatory agencies. The ICH was organized to provide an opportunity for harmonization initiatives to be developed with input from both regulatory and industry representatives. The ICH is concerned with harmonization among the following three regions: The European Union, Japan, and the United States. The six ICH sponsors are the European Commission, the European Federation of Pharmaceutical Industries Associations, the Japanese Ministry of Health and Welfare, the Japanese Pharmaceutical Manufacturers Association, FDA, and the Pharmaceutical Research and Manufacturers of America. The ICH Secretariat, which coordinates the preparation of documentation, is provided by the International Federation of Pharmaceutical Manufacturers Associations (IFPMA). The ICH Steering Committee includes representatives from each of the ICH sponsors and the IFPMA, as well as observers from the World Health Organization, the Canadian Therapeutics Products Programme, and the European Free Trade Area. The ICH process has achieved significant harmonization of the technical requirements for the approval of pharmaceuticals for human use in the three ICH regions. The current ICH process and structure can be found on the Internet at http://www.ifpma.org/ich1.html.

The ICH will present the Common Technical Document and other significant achievements at the ICH 5 Conference in San Diego in November 2000. In preparing for this meeting, the ICH Steering Committee is evaluating the future direction for the ICH, including structure, processes, work program, and global cooperation. FDA is soliciting public input at this time to assist the agency in these deliberations.

II. Issues To Be Discussed at the Public Meeting

The issues to be discussed include the following: (1) Administrative and technical issues, (2) future participation, (3) global cooperation, and (4) new topic areas.

Interested persons may present data, information, or views, orally or in writing, on issues pending at the public meeting. Oral presentations from the public will be scheduled between approximately 10:30 a.m. and 2 p.m. Time allotted for oral presentations may be limited to 10 minutes. Those desiring to make oral presentations should notify the contact person by May 9, 2000, and submit: A brief statement of the general nature of the evidence or arguments they wish to present, the names and addresses, phone number, fax, and e-mail of proposed participants, and an indication of the approximate time requested to make their presentation.

The full agenda for the public meeting will be available on May 10, 2000, at the Dockets Management Branch (address above). Requests should be identified with the Docket Number 00N–1220.

Dated: April 28, 2000.

Margaret M. Dotzel,

Acting Associate Commissioner for Policy.

[FR Doc. 00–11246 Filed 5–2–00; 11:30 am]

BILLING CODE 4160–01–F

DEPARTMENT OF HEALTH AND HUMAN SERVICES

Health Care Financing Administration

[Document Identifier: HCFA–452]

Agency Information Collection Activities: Proposed Collection; Comment Request

AGENCY: Health Care Financing Administration, HHS.

In compliance with the requirement of section 3506(c)(2)(A) of the Paperwork Reduction Act of 1995, the Health Care Financing Administration (HCFA), Department of Health and Human Services, is publishing the following summary of proposed collections for public comment. Interested persons are invited to send comments regarding this burden estimate or any other aspect of this collection of information, including any of the following subjects: (1) The necessity and utility of the proposed information collection for the proper performance of the agency's functions; (2) the accuracy of the estimated burden; (3) ways to enhance the quality, utility, and clarity of the information to be collected; and (4) the use of automated collection techniques or other forms of information technology to minimize the information collection burden.

Type of Information Collection Request: Reinstatement, with change, of a previously approved collection; *Title of Information Collection:* Ambulatory Surgical Center Payment Rate Survey; *Form No.:* HCFA–452 (OMB# 0938–0434); *Use:* Section 1833(i)(2)(A)(i) of the Act requires that, for the purpose of estimating Medicare Part B payment amounts for ASCs, the Secretary take a survey not later than January 1, 1995, and every fives years thereafter, of the audited costs incurred by ASCs, based upon a representative sample of procedures and facilities; *Frequency:* Once; *Affected Public:* Business or other for-profit, Not-for-profit institutions; *Number of Respondents:* 2,200; *Total Annual Responses:* 2,200; *Total Annual Hours:* 77,000.

To obtain copies of the supporting statement and any related forms for the proposed paperwork collections referenced above, access HCFA's Web Site address at http://www.hcfa.gov/regs/prdact95.htm, or E-mail your request, including your address, phone number, OMB number, and HCFA document identifier, to Paperwork@hcfa.gov, or call the Reports Clearance Office on (410) 786–1326. Written comments and recommendations for the proposed information collections must be mailed within 60 days of this notice directly to the HCFA Paperwork Clearance Officer designated at the following address: HCFA, Office of Information Services, Security and Standards Group, Division of HCFA Enterprise Standards, Attention: Julie Brown, Room N2–14–26, 7500 Security Boulevard, Baltimore, Maryland 21244–1850.

Dated: April 11, 2000.

John P. Burke, III,

Reports Clearance Officer, Security and Standards Group, Division of HCFA Enterprise Standards.

[FR Doc. 00–11134 Filed 5–3–00; 8:45 am]

BILLING CODE 4120–03–P

DEPARTMENT OF THE INTERIOR

Fish and Wildlife Service

Aquatic Nuisance Species Task Force Great Lakes Panel

AGENCY: Fish and Wildlife Service, Interior.

ACTION: Notice of meeting.

SUMMARY: This notice announces a meeting of the Aquatic Nuisance Species Task Force Great Lakes Panel on Aquatic Nuisance Species. The meeting topics are identified in the **SUPPLEMENTARY INFORMATION.**

DATES: The Great Lakes Panel on Aquatic Nuisance Species will meet from 1:00 pm to 5:00 pm on May 10, 2000, and from 8:00 am to 12:00 noon on May 11, 2000.

ADDRESSES: The meeting will be held at the Holiday Inn—Downtown Waterfront, Duluth, Minnesota.

FOR FURTHER INFORMATION CONTACT: Sharon Gross, Executive Secretary, Aquatic Nuisance Species Task Force at 703–358–2308 or Kathe Glassner-Schwayder at 734–665–9135.

SUPPLEMENTARY INFORMATION: Pursuant to section 10(a)(2) of the Federal Advisory Committee Act (5 U.S.C. App. I), this notice announces a meeting of the Aquatic Nuisance Species Task Force Great Lakes Panel on Aquatic Nuisance Species. The Task Force was established by the Nonindigenous Aquatic Nuisance Prevention and Control Act of 1990 (16 U.S.C. 4701–4741).

Topics to be addressed at this meeting include updates from subcommittees on information/education, research coordination and policy and legislation; review and discussion of the information/education strategy for aquatic nuisance prevention and control; review and discussion of the Great Lakes Action Plan; and discussion of current policy initiatives including reauthorization of NISA, ballast water standards, and Michigan State Ballast Water Legislation.

Minutes of the meeting will be maintained by the Executive Secretary, Aquatic Nuisance Species Task Force, Suite 851, 4401 North Fairfax Drive, Arlington, Virginia 22203–1622. Minutes for the meetings will be available at this location for public inspection during regular business hours, Monday through Friday.

Dated: April 28, 2000.

Cathleen I. Short,

Aquatic Nuisance Species Task Force Co-Chair, Assistant Director—Fisheries.

[FR Doc. 00–11091 Filed 5–3–00; 8:45 am]

BILLING CODE 4310–55–M

DEPARTMENT OF THE INTERIOR

Bureau of Land Management

[CO–934–5700; COC62391, COC62392, COC62431]

Notice of Proposed Reinstatement of Terminated Oil and Gas Leases

Pursuant to the provisions of 30 U.S.C. 188(d) and (e), and 43 CFR 3108.2–3(a) and (b)(1), a petition for reinstatement of oil and gas leases, COC62391, COC62392, and COC62431, for lands in San Miguel and Montrose counties, Colorado, were timely filed and were accompanied by all the required rentals accruing from the date of termination.

The lessee has agreed to the amended lease terms for rentals and royalties at rates of $10.00 per acre, or fraction thereof, per year and 16 2/3 percent, respectively.

The lessee has paid the required $500 administrative fee and $125 to reimburse the Department for the cost of this **Federal Register** notice. The lessee has met all the requirements for reinstatement of the lease as set out in Section 31(d) and (e) of the Mineral Lands Leasing Act of 1920 (30 U.S.C. 188), and Bureau of Land Management is proposing to reinstate leases

COC62391, COC62392, and COC62431 effective December 1, 1999, subject to the original terms and conditions of the lease and the increased rental and royalty rates cited above.

Kathleen L. Toth,

Land Law Examiner, Oil and Gas Lease Maintenance.

[FR Doc. 00–11135 Filed 5–3–00; 8:45 am]

BILLING CODE 4310–JB–P

DEPARTMENT OF THE INTERIOR

Bureau of Land Management

[WY–100–5700–00–EU; WYW–82538]

Realty Action: Direct Sale of Public Lands; Wyoming

AGENCY: Bureau of Land Management, Interior.

ACTION: Notice of realty action.

SUMMARY: The following public land in Sublette County has been examined and found suitable for direct sale under Section 203 of the Federal Land Policy and Management Act of 1976 (43 U.S.C. 1713) at not less than the fair market value.

Sixth Principal Meridian

T. 30 N., R. 106 W.

Sec. 9, SE¼NW¼

The above lands contain 40 acres, more or less.

SUPPLEMENTARY INFORMATION: The BLM proposes to sell the surface estate of the above described land to William and Phyllis Mayo. The parcel is completely surrounded by William and Phyllis Mayo's private land holdings.

FOR FURTHER INFORMATION CONTACT: Bill Wadsworth, Realty Specialist, Bureau of Land Management, Pinedale Field Office, P.O. Box 768, Pinedale, WY 82941, 307–367–5341.

The proposed sale is consistent with the Pinedale Field Office Management Plan and because of its location is difficult and uneconomic to manage as part of the public lands, and is not suitable for management by another Federal department. The land contains no other known public values. Detailed information concerning this action is available for review at the Bureau of Land Management, Pinedale Field Office, 432 East Mill Street, Pinedale, WY 82941.

Conveyance of the public land will be subject to:

1. Reservation of a right-of-way for ditches or canals pursuant to the Act of August 30, 1890, 43 U.S.C. 945.

2. Reservation of all minerals to the United States Of America, together with the right to prospect for, mine and remove the minerals.

3. All valid existing rights documented on the official public land records at the time of conveyance.

Upon publication of this notice in the **Federal Register**, the land will be segregated from all other forms of appropriation under the public land laws, including the general mining laws, except for conveyance under the Federal Land Policy and Management Act and leasing under the mineral leasing laws. The segregative effect will end upon issuance of the patent or 270 days from the date of this publication, whichever occurs first.

For a period of forty-five (45) days from the date of issuance of this notice, interested parties may submit comments to the Bureau of Land Management, Field Manager, Pinedale Field Office, P.O. Box 768, Pinedale, Wyoming, 82941. Any adverse comments will be reviewed by the State Director, who may sustain, vacate, or modify this realty action. In the absence of any objections, this proposed realty action will become final.

Dated: April 27, 2000.

Priscilla E. Mecham,

Field Manager.

[FR Doc. 00–11097 Filed 5–3–00; 9:45 am]

BILLING CODE 4310–84–M

DEPARTMENT OF THE INTERIOR

Bureau of Land Management

[CA–680–00–1220–HQ]

Extension of the Comment Period Regarding the Proposal of a Supplemental Rule Restricting Recreational Shooting to Protect Human Health and Safety in the Populated Western Portion of Wonder Valley California, Federal Register Notice 00–8017

AGENCY: Bureau of Land Management, Department of the Interior, Barstow Field Office, Desert District, California.

ACTION: This notice extends the comment period for Federal Register Notice 00–8017 to May 30, 2000. A public information meeting will be held May 9, 2000 at the Wonder Valley Community Center located at 80526½ Amboy Road in Wonder Valley, California. Bureau of Land Management officials will be available from 5:00 to 8:00 P.M. to meet with concerned citizens and answer questions regarding **Federal Register** Notice 00–8017.

SUMMARY: This notice extends the comment period for **Federal Register** Notice 00–8017 to May 30, 2000. A public information meeting will be held May 9, 2000 at the Wonder Valley Community Center located at 80526 ½ Amboy Road in Wonder Valley, California. Bureau of Land Management officials will be available from 5:00 to 8:00 P.M. to meet with concerned citizens and answer questions regarding **Federal Register** Notice 00–8017. **Federal Register** Notice 00–8017 proposes that on those public lands administered by the BLM and bounded to the west by the corporate limits of the City of Twentynine Palms, California, the south by Joshua Tree National Park, the north by the Marine Corps Air Ground Combat Center and the east by Range 11 East, San Bernardino Meridian, it would be prohibited to fire any firearm except shotguns with shot shells containing shot no larger than one-half the diameter of the bore. This proposed supplemental rule would not affect the legitimate and legal pursuit of game or shooting at controlled, permitted ranges.

DATES: Comments regarding **Federal Register** Notice 00–8017 must be received in writing to the BLM by May 30, 2000. Written comments shall be mailed to the following addresses: Mr. Tim Read, Field Manager, Bureau of Land Management, Barstow Field Office, 2601 Barstow Road, Barstow, CA 92311.

SUPPLEMENTARY INFORMATION: Uncontrolled recreational shooting on public land creates a public health and safety hazard by firing solid projectile firearms (such as rifles and pistols), that have a long range, into and about a populated rural area. The area of concern also receives heavy recreational use by equestrians, recreational miners and off-highway vehicles. BLM has received complaints from area residents and recreationist that have nearly been struck by stray bullets from recreational shooting. The proposed supplemental rule would prohibit the firing of any firearm except shotguns with shot shells containing shot no larger than one-half the diameter of the bore. Rounds of this type have less energy and travel considerably shorter distances than solid projectiles (such as those fired from a rifle or pistol). By prohibiting all but low energy, short range gunfire, a safer environment on both public and private lands within this populated area will be created. This proposed supplementary rule only affects public lands administered by BLM and would not affect the legitimate and legal pursuit of game or shooting at controlled, permitted ranges. This proposed supplemental rule will not

infringe upon Constitutional rights of an individual to own or possess a lawful firearm. In accordance with Title 43, Code of Federal Regulations Section 8365.1–6, the State Director may establish supplementary rules in order to provide for the protection of persons, property and public lands and resources. This authority was delegated to the District Managers and Field Managers pursuant to BLM Manual 1203, California Supplement. Failure to comply with the proposed supplementary rule would be punishable by a fine not to exceed $100,000 and/or imprisonment not to exceed twelve months. The environmental effects of the proposed rule were analyzed separately by Environmental Assessment CA–680–00–29.

FOR FURTHER INFORMATION CONTACT: BLM Barstow Field Office, 2601 Barstow Road, Barstow, CA 92231, telephone (760) 252–6000.

Tim Read,

Field Manager.

[FR Doc. 00–11096 Filed 5–3–00; 8:45 am]

BILLING CODE 4310–84–P

INTERNATIONAL TRADE COMMISSION

[Inv. No. 337–TA–433]

In the Matter of Certain Safety Eyewear and Components Thereof; Notice of Investigation

AGENCY: U.S. International Trade Commission.

ACTION: Institution of investigation pursuant to 19 U.S.C. 1337.

SUMMARY: Notice is hereby given that a complaint was filed with the U.S. International Trade Commission on March 31, 2000, under section 337 of the Tariff Act of 1930, as amended, 19 U.S.C. 1337, on behalf of Bacou USA Safety, Inc. and Uvex Safety Manufacturing, Inc., both of Smithfield, Rhode Island. Supplements to the complaint were filed on April 18 and 19, 2000. The complaint, as supplemented, alleges violations of section 337 in the importation into the United States, the sale for importation, and the sale within the United States after importation of certain safety eyewear and components thereof by reason of (a) infringement of claims 1–5, 8–14, and 16–18 of U.S. Letters Patent 5,457,505, (b) infringement of the claim of U.S. Letters Patent Des. 322,616 and (c) misappropriation of trade dress, the threat or effect of which is to destroy or substantially injure an industry in the United States. The complaint also alleges that there exists an industry in the United States with respect to the asserted intellectual property.

The complainants request that the Commission institute an investigation and, after a hearing, issue a permanent exclusion order and a permanent cease and desist order.

ADDRESSES: The complaint and supplements, except for any confidential information contained therein, are available for inspection during official business hours (8:45 a.m. to 5:15 p.m.) in the Office of the Secretary, U.S. International Trade Commission, 500 E Street, SW, Room 112, Washington, DC 20436, telephone 202–205–2000. Hearing-impaired individuals are advised that information on this matter can be obtained by contacting the Commission's TDD terminal on 202–205–1810. Persons with mobility impairments who will need special assistance in gaining access to the Commission should contact the Office of the Secretary at 202–205–2000. General information concerning the Commission may be obtained by accessing its internet server (http://www.usitc.gov).

FOR FURTHER INFORMATION CONTACT: Steven A. Glazer, Esq., Office of Unfair Import Investigations, U.S. International Trade Commission, telephone 202–205–2577.

Authority: The authority for institution of this investigation is contained in section 337 of the Tariff Act of 1930, as amended, and in section 210.10 of the Commission's Rules of Practice and Procedure, 19 CFR 210.10 (1999).

Scope of Investigation

Having considered the complaint, the U.S. International Trade Commission, on April 28, 2000, ordered that —

(1) Pursuant to subsection (b) of section 337 of the Tariff Act of 1930, as amended, an investigation be instituted to determine:

(a) whether there is a violation of subsection (a)(1)(B) of section 337 in the importation into the United States, the sale for importation, or the sale within the United States after importation of certain safety eyewear and components thereof by reason of infringement of claims 1–5, 8–14, and 16–18 of U.S. Letters Patent 5,457,505, or of the claim of U.S. Letters Patent Des. 322,616, and whether there exists an industry in the United States as required by subsection (a)(2) of section 337; or

(b) whether there is a violation of subsection (a)(1)(A) of section 337 in the importation into the United States, the sale for importation, or the sale within the United States after importation of certain safety eyewear and components thereof by reason of misappropriation of trade dress, the threat or effect of which is to destroy or substantially injure an industry in the United States.

(2) For the purpose of the investigation so instituted, the following are hereby named as parties upon which this notice of investigation shall be served:

(a) The complainants are —

Bacou USA Safety, Inc., 10 Thurber Boulevard, Smithfield, Rhode Island 02917

Uvex Safety Manufacturing, Inc., 10 Thurber Boulevard, Smithfield, Rhode Island 02917

(b) The respondent is the following company alleged to be in violation of section 337, and is the party upon which the complaint is to be served: Crews, Inc., 5191 Hickory Hill Road, Memphis, Tennessee 38141.

(c) Steven A. Glazer, Esq., Office of Unfair Import Investigations, U.S. International Trade Commission, 500 E Street, SW, Room 401–K, Washington, DC 20436, who shall be the Commission investigative attorney, party to this investigation; and

(3) For the investigation so instituted, the Honorable Debra Morriss is designated as the presiding administrative law judge.

A response to the complaint and the notice of investigation must be submitted by the named respondent in accordance with section 210.13 of the Commission's Rules of Practice and Procedure, 19 CFR 210.13. Pursuant to 19 CFR 201.16(d) and 210.13(a) of the Commission's Rules, such response will be considered by the Commission if received not later than 20 days after the date of service by the Commission of the complaint and the notice of investigation. An extension of time for submitting a response to the complaint will not be granted unless good cause therefor is shown.

Failure of the respondent to file a timely response to each allegation in the complaint and in this notice may be deemed to constitute a waiver of the right to appear and contest the allegations of the complaint and this notice, and to authorize the administrative law judge and the Commission, without further notice to the respondent, to find the facts to be as alleged in the complaint and this notice and to enter both an initial determination and a final determination containing such findings, and may result in the issuance of a limited exclusion order or a cease and desist order or both directed against the respondent.

By order of the Commission.

Issued: May 1, 2000.

Donna R. Koehnke,

Secretary.

[FR Doc. 00–11168 Filed 5–3–00; 8:45 am]

BILLING CODE 7020–02–P

INTERNATIONAL TRADE COMMISSION

Sunshine Act Meeting

AGENCY HOLDING THE MEETING: United States International Trade Commission

TIME AND DATE: May 9, 2000 at 11:00 a.m.

PLACE: Room 101, 500 E Street S.W., Washington, DC 20436, Telephone: (202) 205–2000.

STATUS: Open to the public.

MATTERS TO BE CONSIDERED: 1. Agenda for future meeting: none

2. Minutes

3. Ratification List

4. Inv. Nos. 701–TA–318 and 731–TA–538 and 561 (Review)(Sulfanilic Acid from China and India)—briefing and vote. (The Commission will transmit its determination to the Secretary of Commerce on May 18, 2000.)

5. Inv. Nos. 701–TA–286 and 731–TA–365 (Review)(Industrial Phosphoric Acid from Belgium and Israel)—briefing and vote. (The Commission will transmit its determination to the Secretary of Commerce on May 22, 2000.)

6. Outstanding action jackets:

(1.) Document No. GC–00–020: Administrative matters.

In accordance with Commission policy, subject matter listed above, not disposed of at the scheduled meeting, may be carried over to the agenda of the following meeting.

By order of the Commission.

Issued: May 1, 2000.

Donna R. Koehnke,

Secretary.

[FR Doc. 00–11332 Filed 5–2–00; 3:48 pm]

BILLING CODE 7020–02–P

DEPARTMENT OF JUSTICE

National Institute of Justice

[OJP(NIJ)–1270]

Announcement of the Availability of the National Institute of Justice Solicitation for Evaluation of the Comprehensive Indian Resources for Community and Law Enforcement (CIRCLE) Project

AGENCY: Office of Justice Programs, National Institute of Justice, Justice.

ACTION: Notice of solicitation.

SUMMARY: Announcement of the availability of the National Institute of Justice solicitation ''Evaluation of the Comprehensive Indian Resources for Community and Law Enforcement (CIRCLE) Project.''

DATES: Proposals must be received by 5 p.m. ET, Friday, June 23, 2000.

ADDRESSES: National Institute of Justice, 810 Seventh Street, NW, Washington, DC 20531.

FOR FURTHER INFORMATION CONTACT: For a copy of the solicitation, please call NCJRS 1–800–851–3420. For general information about application procedures for solicitations, please call the U.S. Department of Justice Response Center at 1–800–421–6770.

SUPPLEMENTARY INFORMATION:

Authority

This action is authorized under the Omnibus Crime Control and Safe Streets Act of 1968, Sections 201–03, as amended, 42 U.S.C. 3721–23 (1994).

Background

The National Institute of Justice (NIJ) is soliciting proposals to conduct a participatory evaluation of the Comprehensive Indian Resources for Community and Law Enforcement (CIRCLE) Project, a U.S. Department of Justice initiative designed to empower Native American Communities to more effectively fight crime, violence, and substance abuse.

The CIRCLE Project is based on two key principles:

(1) The CIRCLE tribal communities will play the lead role, with assistance from the Federal government, in developing and implementing crime, violence, and drug control efforts.

(2) The problems to be addressed require a comprehensive approach that incorporates coordinated and multi-disciplinary efforts.

This evaluation will focus on the development, implementation, and outcomes of the CIRCLE Project at three sites: Oglala Sioux Tribe, Northen Cheyenne Tribe, and Zuni Pueblo.

An award totaling up to $270,000 will be made available for this first 18 month phase of the CIRCLE Project Evaluation.

Interested organizations should call the National Criminal Justice Reference Service (NCJRS) at 1–800–851–3420 to obtain a copy of ''Evaluation of the Comprehensive Indian Resources for Community and Law Enforcement (CIRCLE) Project'' (refer to document no. SL000417). For World Wide Web access, connect to either NIJ at http://www.ojp.usdoj.gov/nij/funding.htm, or the NCJRS Justice Information Center at http://www.ncjrs.org/fedgrant.htm#nij.

Dated: April 28, 2000.

Julie E. Samuels,

Acting Director, National Institute of Justice.

[FR Doc. 00–11129 Filed 5–3–00; 8:45 am]

BILLING CODE 4410–18–P

DEPARTMENT OF LABOR

Office of the Secretary; Submission for OMB Emergency Review; Comment Request

April 28, 2000.

The Department of Labor has submitted the following (see below) information collection request (ICR), utilizing emergency review procedures, to the Office of Management and Budget (OMB) for review and clearance in accordance with the Paperwork Reduction Act of 1995 Public Law 104–12, 44 U.S.C. Chapter 35). OMB approval has been requested by May 5, 2000. A copy of this ICR, with applicable supporting documentation may be obtained by calling the Department of Labor Departmental Clearance Officer, Ira Mills (202) 219–5095 x129.

Comments and questions about the ICR listed below should be forwarded to the Office of Information and Regulatory Affairs, Attn: OMB Desk Officer for the Employment and Training Administration, Office of Management and Budget, Room 10235, Washington, D.C. 20503 (202) 395–7316.

The Office of Management and Budget is particularly interested in comments which:

- Evaluate whether the proposed collection of information is necessary for the proper performance of the functions of the agency, including whether the information will have practical utility;
- Evaluate the accuracy of the agency's estimate of the burden of the proposed collection of information, including the validity of the methodology and assumptions used;

• Enhance the quality, utility, and clarity of the information to be collected; and

• Minimize the burden of the collection of information on those who respond, including through the use of appropriate automated, electronic, mechanical, or other technological collection techniques or other forms of information technology, *e.g.* permitting electronic submissions of responses.

Agency: Employment and Training Administration.

Title: WIA Transition Summer Report.

OMB Number: 1205–0New.

Frequency: End of summer.

Affected Public: State, Local, or Tribal Government.

Number of Respondents: 696.

Estimated Time Per Respondent: 1 hour.

Total Burden Hours: 696.

Description: The Employment and Training Administration (ETA) has oversight responsibilities for the Summer Youth Employment Opportunities under the Workforce Investment Act (WIA) (P.L. 102–367). As part of this oversight effort, the summer participation levels will be monitored. The State and service delivery area participant data will be reported at the end of Program Year 2000 Quarter 1 (September 30, 2000). The participant data will reflect JTPA Title II–B participants who terminate prior to July 1, 2000, JTPA Title II–B participants who are transitioned to WIA on July 1, 2000, and youth who register for the summer employment opportunities component of WIA through the end of the report period (September 30, 2000). JTPA Title II–B participants who receive only objective assessment and individual service strategy services will not be included in the participant reports.

Ira Mills,

Departmental Clearance Officer.

[FR Doc. 00–11122 Filed 5–3–00; 8:45 am]

BILLING CODE 4510–30–M

DEPARTMENT OF LABOR

Office of the Secretary; Submission for OMB Review; Comment Request

May 1, 2000.

The Department of Labor (DOL) has submitted the following public information collection requests (ICRs) to the Office of Management and Budget (OMB) for review and approval in accordance with the Paperwork Reduction Act of 1995 (Pub. L. 104–13, 44 U.S.C. Chapter 35). A copy of each individual ICR, with 44 U.S.C. Chapter 35). A copy of each individual ICR, with applicable supporting documentation, may be obtained by calling the Department of Labor. To obtain documentation for BLS, ETA, PWBA, and OASAM contact Karin Kurz ({202} 216–5096 ext. 159 or by E-mail to Kurz-Karin@dol.gov). To obtain documentation for ESA, MSHA, OHSA, and VETS contact Darrin King ({202} 219–5096 ext. 151 or by E-Mail to King-Darrin@dol.gov).

Comments should be sent to Office of Information and Regulatory Affairs, Attn: OMB Desk Officer for BLS, DM, ESA, ETA, MSHA, OSHA, PWBA, or VETS, Office of Management and Budget, Room 10235, Washington, DC 20503 ({202} 395–7316), within 30 days from the date of this publication in the **Federal Register**.

The OMB is particularly interested in comments which:

• Evaluate whether the proposed collection of information is necessary for the proper performance of the functions of the agency, including whether the information will have practical utility;

• Evaluate the accuracy of the agency's estimate of the burden of the proposed collection of information, including the validity of the methodology and assumptions used;

• Enhance the quality, utility, and clarity of the information to be collected; and

• Minimize the burden of the collection of information on those who are to respond, including through the use of appropriate automated, electronic, mechanical, or other technological collection techniques or other forms of information technology, *e.g.,* permitting electronic submission of responses.

Type of Review: Revision of a currently approved collection.

Agency: Office of the Assistant Secretary for Administration and Management, Department Management.

Title: Customer Satisfaction Surveys and Conference Evaluations Generic Clearance.

OMB Number: 1225–0059.

Affected Public: Individuals or households; Business or other for-profit; Not-for-profit institutions; Farms; Federal government; State, Local, or Tribal government.

Total Respondents: Varies by survey/evaluation; may range from as few as 10 to over 63, 750.

Frequency: On Occasion.

Total Responses: Varies by survey/evaluation; may range from as few as 10 to over 63,750.

Average Time Per Response: Varies by survey/evaluation with an average of 9.5 minutes per survey and 2.5 minutes per evaluation.

Total Burden Hours: 13,500.

Total Burden Cost (capital/startup): $0.

Total Burden Cost (operating/maintenance): $0.

Total Annualized Capital/Startup Costs: $0.

Total Annual Costs (operating/maintaining systems of purchasing services): $0.

Description: The Department of Labor (DOL) is seeking a generic clearance for customer satisfaction surveys and conference evaluations to gather information from customers and conference attendees about the services and products provided by the Department. This is part of an ongoing process to improve DOL programs.

Ira L. Mills,

Department Clearance Officer.

[FR Doc. 00–11153 Filed 5–3–00; 8:45 am]

BILLING CODE 4510–23–M

DEPARTMENT OF LABOR

Office of the Secretary; President's Committee on the International Labor Organizations; Notice of Closed Meeting

In accordance with Section 10(a) of the Federal Advisory Committee Act (Public Law 92–463), announcement is hereby given of a meeting of the President's Committee on the ILO:

Name: President's Committee on the International Labor Organization.

Date: Tuesday, May 16, 2000.

Time: 2 p.m.

Place: U.S. Department of Labor, Third & Constitution Ave., N.W., Room S–2508, Washington, D.C. 20210.

Purpose: The meeting will include a review and discussion of current issues relating to United States' negotiating positions with member nations of the International Labor Organization. The meeting will concern matters the disclosure of which would seriously compromise the Government's negotiating objectives and bargaining positions. Accordingly, the meeting will be closed to the public, pursuant to Section 10(d) of the Federal Advisory Committee Act and Section 9(B) of the Government in the Sunshine Act, 5 U.S.C. 552b(c)(9)(B).

FOR FURTHER INFORMATION CONTACT: Mr. Andrew J. Samet, President's Committee on the International Labor Organization, U.S. Department of Labor, 200 Constitution Avenue, N.W., Room S–2235, Washington, D.C. 20210, Telephone (202) 693–4770.

Signed at Washington, DC this 1st day of May, 2000.

Alexis M. Herman,

Secretary of Labor.

[FR Doc. 00–11154 Filed 5–3–00; 8:45 am]

BILLING CODE 4510–23–M

DEPARTMENT OF LABOR

Office of the Secretary

Presidential Task Force on Employment of Adults With Disabilities; Notice of Town Hall Meeting

AGENCY: Office of the Secretary, Labor.

ACTION: Notice of Town Hall meeting.

SUMMARY: Pursuant to Executive Order No. 13078, authorizing the Presidential Task Force on Employment of Adults with Disabilities (Task Force), notice is given of a Town Hall Meeting. The purpose of the Task Force is to create a ''coordinated and aggressive national policy to bring adults with disabilities into gainful employment at a rate that is as close as possible to that of the general adult population.'' The purpose of the Town Hall Meetings is to invite the public to participate by discussing their thoughts, concerns, and experiences with Task Force members. The topics to be addressed at this Town Hall Meeting will include expanding employment opportunities for people with psychiatric disabilities.

DATES: The Task Force will hold a Town Hall Meeting on Wednesday, May 24, 2000 from 2:00 p.m. to approximately 7:00 p.m. Registration will begin at 12:00 noon. The date, location, and time for each subsequent Town Hall Meeting will be announced in advance in the **Federal Register**.

ADDRESSES: The site of this Town Hall Meeting is the State Capitol, Legislative Office Building, Hartford, Connecticut. All interested parties are invited to attend this Town Hall Meeting. Seating may be limited and will be available on a first-come, first-served basis.

FOR FURTHER INFORMATION CONTACT: Paul E. Bennett, Presidential Task Force on Employment of Adults with Disabilities, U. S. Department of Labor, 200 Constitution Avenue, NW, Room S–2220D, Washington, DC 20210. Requests can be made by e-mail to: bennett-paul@dol.gov; by phone (202) 693–4939; TTY (202) 693–4920; or fax (202) 693–4929. These are not toll-free numbers.

SUPPLEMENTARY INFORMATION: Pursuant to Executive Order No. 13078, the Presidential Task Force on Employment of Adults with Disabilities (Task Force), notice is given of a Town Hall Meeting.

The purpose of the Task Force is to develop a ''coordinated and aggressive national policy to bring adults with disabilities into gainful employment at a rate that is as close as possible to that of the general adult population.'' The purpose of this Town Hall Meeting is to invite stakeholders to address the alarming unemployment rate among Americans with disabilities. The theme for the meeting is: ''Recovering Our Dreams: Persons with Psychiatric Disabilities in Search of Opportunities and Careers''. Particular focus is requested at this meeting on expanding employment opportunities for people with psychiatric disabilities.

Appointed by President Clinton, the membership of the Task Force is as follows: Secretary of Labor, Chair of the Task Force; Chair of the President's Committee on Employment of People with Disabilities, Vice Chair of the Task Force; Secretary of Education; Secretary of Veterans Affairs; Secretary of Health and Human Services; Commissioner of the Social Security Administration; Secretary of the Treasury; Secretary of Commerce; Secretary of Transportation; Director of the Office of Personnel Management; Administrator of the Small Business Administration; Chair of the Equal Employment Opportunity Commission; Chair of the National Council on Disability; Commissioner of the Federal Communications Commission; Secretary of Agriculture; Secretary of Housing and Urban Development; Secretary of the Interior; the Attorney General; and such other senior executive branch officials as may be determined by the Chair of the Task Force.

Agenda

The Town Hall Meeting is an open forum where the public is invited to give testimony and/or make presentations with a focus on expanding employment opportunities for people with psychiatric disabilities.

Public Participation

Members of the public wishing to present an oral statement to the Task Force should forward their requests as soon as possible but no later than May 10, 2000. Requests may be made by telephone, fax machine, or mail. Time permitting, the members of the Task Force will attempt to accommodate all requests by reserving time for presentations. The order of persons making such presentations will be assigned in the order in which the requests are received. Members of the public must limit oral statements to five minutes, but extended written statements may be submitted for the record. Members of the public may also submit written statements for distribution to the Task Force members and inclusion in the public record without presenting oral statements. Such written statements should be sent by mail or fax machine no later than May 10, 2000.

Information on Town Hall Meetings and summaries of other documents are available to the public on the Task Force's web site, found on the Department of Labor's web site at www.dol.gov.

Reasonable accommodations will be available. Persons needing any special assistance such as sign language interpretation, or other special accommodation, are invited to contact the Task Force as shown above.

Signed at Washington, DC, this first day of May, 2000.

Rebecca L. Ogle,

Executive Director, Presidential Task Force on Employment of Adults with Disabilities.

[FR Doc. 00–11152 Filed 5–3–00; 8:45 am]

BILLING CODE 4510–23–P

DEPARTMENT OF LABOR

Employment and Training Administration

[TA–W–37,451; TA–W–37,451A]

Cross Creek Apparel, Inc., Mt. Airy, and Walnut Cove, North Carolina; Amended Certification Regarding Eligibility To Apply for Worker Adjustment Assistance

In accordance with Section 223 of the Trade Act of 1974 (19 U.S.C. 2273) the Department of Labor issued a Notice of Certification Regarding Eligibility to Apply for Worker Adjustment Assistance on April 4, 2000, applicable to workers of Cross Creek Apparel, Inc., Mt. Airy and Walnut Cove, North Carolina. The notice will be published soon in the **Federal Register.**

At the request of the State agency, the Department reviewed the certification for workers of the subject firm. The workers produce knit apparel. New information shows that the Department inadvertently included the workers of the Mt Airy, North Carolina location of Cross Creek Apparel in its certification. Findings show that a previous certification, TA–W–35,750, was issued on March 17, 1999, covering the same worker group, who were engaged in employment related to the production of knit apparel. That certification expires March 17, 2001.

Based on these findings, the Department is amending the certification to limit coverage to only

workers of Cross Creek Apparel, Walnut Cove, North Carolina.

The intent of the Department''s certification is in include all workers of Cross Creek Apparel, Inc., Walnut Cove, North Carolina adversely affected by increased imports.

The amended notice applicable to TA–W–37,451 is hereby issued as follows:

''All workers of Cross Creek Apparel, Walnut Cove, North Carolina who became totally or partially separted from employment on or after February 21, 1999 through April 4, 2002 are eligible to apply for adjustment assistance under Section 223 of the Trade Act of 1974.''

Signed at Washington, D.C. this 20th day of April, 2000.

[FR Doc. 00–11112 Filed 5–3–00; 8:45 am]

BILLING CODE 4510–30–M

DEPARTMENT OF LABOR

Employment and Training Administration

[TA–W–36,874]

Fahnos Apparel, Inc. El Paso, TX; Amended Certification Regarding Eligibility To Apply for Worker Adjustment Assistance

In accordance with Section 223 of the Trade Act of 1974 (19 U.S.C. 2273) the Department of Labor issued a Certification of Eligibility to Apply for Worker Adjustment Assistance on November 19, 1999 applicable to workers of Fashions Apparel Corporation, El Paso, Texas. The notice was published in the **Federal Register** on December 28, 1999 (64 FR 72691).

At the request of the State agency, the Department reviewed the certification for workers of the subject firm. New findings show that the Department incorrectly identified the subject firm name in its entirety. The Department is amending the certification determination to correctly identify the subject firm title name to read ''Fahnos Apparel, Inc.''.

The amended notice applicable to TA–W–36,874 is hereby issued as follows:

All workers of Fahnos Apparel, Inc., El Paso, Texas who became totally or partially separated from employment on or after September 10, 1998 through November 19, 2001 are eligible to apply for adjustment assistance under Section 223 of the Trade Act of 1974.

Signed at Washington, D.C. this 20th day of April 2000.

Edward A. Tomchick,

Director, Division of Trade Adjustment Assistance.

[FR Doc. 00–11110 Filed 5–3–00; 8:45 am]

BILLING CODE 4510–30–M

DEPARTMENT OF LABOR

Employment and Training Administration

TA–W–35,196

New Monarch Machine Tool, Inc. Formerly Known as Monarch Machine Tool Company Cortland, NY; Amended Certification Regarding Eligibility To Apply for Worker Adjustment Assistance

In accordance with Section 223 of the Trade Act of 1974 (19 USC 2273) the Department of Labor issued a Certification of Eligibility to Apply for Worker Adjustment Assistance on December 2, 1998, applicable to workers of Monarch Machine Tool Co., Cortland, New York. The notice was published in the **Federal Register** on December 23, 1998 (63 FR 71165).

At the request of the State agency, the Department reviewed the certification for workers of the subject firm. The workers are engaged in the production of vertical machining centers. Findings show that Monarch Machine Tool Co. was sold in February, 2000 to local management and is now known as New Monarch Machine Tool, Inc. The Department is amending the certification determination to correctly identify the new title name to read ''New Monarch Machine Tool, Inc., (formerly known as Monarch Machine Tool Co.)'', Cortland, New York.

The amended notice applicable to TA–W–35,196 is hereby issued as follows:

All workers of New Monarch Machine Tool, Inc. (formerly known as Monarch Machine Tool Co.), Cortland, New York who became totally or partially separated from employment on or after October 28, 1997 through December 2, 2000 are eligible to apply for adjustment assistance under Section 223 of the Trade Act of 1974.

Dated: Signed at Washington, D.C. this 25th day of April, 2000.

Grant D. Beale,

Program Manager, Division of Trade Adjustment Assistance.

[FR Doc. 00–11111 Filed 5–3–00; 8:45 am]

BILLING CODE 4510–30–M

DEPARTMENT OF LABOR

Employment and Training Administration

[TA–W–37,082]

Outboard Marine Corporation, OMC Evinrude Plant Milwaukee, Wisconsin; Notice of Negative Determination Regarding Application for Reconsideration

By application dated March 24, 2000, the United Steelworkers of America (USWA), Local 1302, request administrative reconsideration of the Department's negative determination regarding worker eligibility to apply for TAA. The denial notice applicable to workers of the subject firm located in Milwaukee, Wisconsin, was signed on March 3, 2000 and published in the **Federal Register** on March 17, 2000 (65 14627).

Pursuant to 29 CFR 90.18(c) reconsideration may be granted under the following circumstances:

(1) If it appears on the basis of facts not previously considered that the determination complained of was erroneous;

(2) if it appears that the determination complained of was based on a mistake in the determination of facts not previously considered; or

(3) if in the opinion of the Certifying Officer, a misinterpretation of facts or of the law justified reconsideration of the decision.

Findings of the initial investigation show that workers of Outboard Marine Corporation, OMC Evinrude Plant, Milwaukee, Wisconsin, producing component parts for outboard motors were denied eligibility to apply for TAA based on the finding that the ''contributed importantly'' criterion of the worker group eligibility requirements of Section 222 of the Trade Act of 1974, as amended, was not met. Layoffs were attributable to the company's decision to consolidate operations and outsource to U.S. manufacturers.

The USWA, Local 1302, states that OMC has entered into an agreement with Suzuki of Japan for the purchase of marine power products, and provided the number of units to be purchased from that supplier this year. This information was available to the Department during the investigation but not elaborated on in the notice of negative determination. The subject firm did not import, nor were there any scheduled imports, of components like or directly competitive with those produced by workers of the firm.

The USWA, Local 1302, also assert that connecting rods for OMC were produced exclusively at OMC Milwaukee plant and those articles were outsourced to a foreign manufacturer. Information provided by the company during the petition investigation did not specifically identify connecting rods as one of the articles produced. The sales and production information submitted to the Department by the subject firm was for crankshafts, drive shafts, propellers and miscellaneous steel products (which included connecting rods).

In order to respond to the USWA, Local 1302, the Department contacted the subject firm, which confirmed that connecting rods were produced at the Milwaukee plant of the subject firm. The company had planned to outsource the production of connecting rods to a domestic manufacturer, but chose a foreign supplier. There were no company of connecting rods during the time period relevant to the investigation, nor have any company imports occurred since the March 3, 2000 negative determination for TA–W–37,082. Connecting rods were an insignificant percentage of output at the subject firm plant. The majority of production at the OMC Evinrude plant in Milwaukee, Wisconsin was transferred domestically.

Conclusion

After review of the application and investigative findings, I conclude that there has been no error or misinterpretation of the law or the facts which would justify reconsideration of the Department of Labor's prior decision. Accordingly, the application is denied.

Signed at Washington, D.C. this 20th day of April 2000.

Edward A. Tomchick,

Director, Division of Trade Adjustment Assistance.

[FR Doc. 00–11121 Filed 5–3–00; 8:45 am]

BILLING CODE 4510–30–M

DEPARTMENT OF LABOR

Employment and Training Administration

Investigations Regarding Certifications of Eligibility To Apply for Worker Adjustment Assistance

Petitions have been filed with the Secretary of Labor under Section 221(a) of the Trade Act of 1974 (''the Act'') and are identified in the Appendix to this notice. Upon receipt of these petitions, the Director of the Division of Trade Adjustment Assistance, Employment and Training Administration, has instituted investigations pursuant to Section 221(a) of the Act.

The purpose of each of the investigations is to determine whether the workers are eligible to apply for adjustment assistance under Title II, Chapter 2, of the Act. The investigations will further relate, as appropriate, to the determination of the date on which total or partial separations began or threatened to begin and the subdivision of the firm involved.

The petitioners or any other persons showing a substantial interest in the subject matter of the investigations may request a public hearing, provided such request is filed in writing with the Director, Division of Trade Adjustment Assistance, at the address shown below, not later than May 15, 2000.

Interested persons are invited to submit written comments regarding the subject matter of the investigations to the Director, Division of Trade Adjustment Assistance, at the address shown below, not later than May 15, 2000.

The petitions filed in this case are available for inspection at the Office of the Director, Division of Trade Adjustment Assistance, Employment and Training Administration, U.S. Department of Labor, 200 Constitution Ave., NW., Washington, DC 20210.

Signed at Washington, DC this 10th day of April 2000.

Grant D. Beale,

Program Manager, Division of Trade Adjustment Assistance.

APPENDIX

[Petitions instituted on 04/10/2000]

TA–W	Subject firm (petitioners)	Location	Date of petition	Product(s)
37,548	Reo Plating, Inc. (Co.)	Providence, RI	03/02/2000	Electro Plating of Jewelry.
37,54 9	Labeling Systems, Inc. (Co.)	Oakland, NJ	03/20/2000	Pressure Sensitive Labeling Machines.
37,550	Lermer Aircraft Galley (Co.)	Eatontown, NJ	03/25/2000	Food Service Carts.
37,551	PDH d/b/a Omnigrid, Inc. (Co.)	Burlington, WA	03/24/2000	Quilting Rulers and Mats.
37,552	Willamette Ind., Inc. (Wkrs)	Dallas, OR	03/21/2000	Plywood.
37,553	Swanic, Inc. (Wkrs)	Attleboro, MA	03/23/2000	Custome Jewelry.
37,554	Ross Corp. (Co.)	Eugene, OR	03/25/2000	Heavy Logging Equipment.
37,555	Alrose Shoe/Ballet Makers (Co.)	Exeter, NH	03/28/2000	Dance Shoes.
37,556	Cintas #765 (Wkrs)	Stevenson, AL	03/25/2000	Ladies' and Men's Shirts and Pants.
37,557	Touch of Lace (Wkrs)	Fairview, NJ	03/24/2000	Embroider.
37,558	Exide Corp. (Co.)	Reading, PA	03/20/2000	Lead Acid Batteries.
37,559	Anchor Laming America (Wkrs)	Cheshire, CT	03/02/2000	Die Sets, Blanchard Grand Plate.
37,560	Honeywell, Inc. (USWA)	Ironton, OH	03/29/2000	Coal Tar Products.
37,561	Manpower Agency (Wkrs)	San Jose, CA	03/09/2000	Disk Drives, Storage at IBM.
37,562	Beloit Corp. (Co.)	Beloit, WI	03/27/2000	Sells and Services Paper Machinery Equip.
37,563	Tecumseh Products Co. (Wkrs)	Somerset, KY	03/10/2000	Refrigeration Compressors.
37,564	American Camper (Co.)	St. George, UT	03/28/2000	Sleeping Bags.
37,565	Philips Components (Co.)	Saugerties, NY	03/20/2000	Yoke Rings.

[FR Doc. 00–11115 Filed 5–3–00; 8:45 am]

BILLING CODE 4510–30–M

DEPARTMENT OF LABOR

Employment and Training Administration

[TA–W–37,466, TA–W–37,466A]

Rochester Button Company; South Boston, VA; Kenbridge VA; Amended Certification Regarding Eligibility To Apply for Worker Adjustment Assistance

In accordance with Section 223 of the Trade Act of 1974 (19 U.S.C. 2273) the Department of Labor issued a Certification of Eligibility to Apply for Worker Adjustment Assistance on April 13, 2000, applicable to workers of Rochester Button Company, South Boston, Virginia. The notice will be published soon in the **Federal Register**.

At the request of the company, the Department reviewed the certification for workers of the subject firm. Information received by the company shows that worker separations occurred at the Kenbridge, Virginia location of Rochester Button Company. The workers are engaged in the production of polyester buttons.

The intent of the Department's certification is to include all workers of Rochester Button Company who were adversely affected by increased imports.

Accordingly, the Department is amending the certification to cover the workers of Rochester Button Company, Kenbridge, Virginia.

The amended notice applicable to TA–W–37,466 is hereby issued as follows:

All workers of Rochester Button Company, South Boston, Virginia (TA–W–37,466), and Kenbridge, Virginia (TA–W–37,466A), who became totally or partially separated from employment on or after March 1, 1999, through April 13, 2002 are eligible to apply for adjustment assistance under Section 223 of the Trade Act of 1974.

Signed at Washington D.C. this 27th day of April, 2000.

Grant D. Beale,

Program Manager, Division of Trade Adjustment Assistance.

[FR Doc. 00–11114 Filed 5–3–00; 8:45 am]

BILLING CODE 4510–30–M

DEPARTMENT OF LABOR

Employment and Training Administration

[TA–W–37,331]

Vesuvius Premier Refractories Washington, Pennsylvania; Dismissal of Application for Reconsideration

Pursuant to 29 CFR 90.18(C) an application for administrative reconsideration was filed with the Director of the Division of Trade Adjustment Assistance for Workers at Vesuvius Premier Refractories, Washington, Pennsylvania. The application contained no new substantial information which would bear importantly on the Department's determination. Therefore, dismissal of the application was issued.

TA–W–37,331; Vesuvius Premier Refractories. Washington, Pennsylvania (April 26, 2000)

Signed at Washington, D.C. this 27th day of April, 2000.

Grant D. Beale,

Program Manager, Division of Trade Adjustment Assistance.

[FR Doc. 00–11116 Filed 5–3–00; 8:45 am]

BILLING CODE 4510–30–M

DEPARTMENT OF LABOR

Employment and Training Administration

[NAFTA—03151]

A and M, Inc. d/b/a Homemaker North Charleston, SC; Amended Certification Regarding Eligibility To Apply for NAFTA-Transitional Adjustment Assistance

In accordance with Section 250(A), Subchapter D, Chapter 2, Title II, of the Department of Labor issued a Certification for NAFTA Transitional Adjustment Assistance on June 25, 1999, applicable to workers of Homemaker Industries, Inc. located in North Charleston, South Carolina. The notice was published in the **Federal Register** on July 20, 1999 (64 FR 38922).

At the request of the State agency, the Department reviewed the certification for workers of the subject firm. The workers are engaged in the production of braided rugs. New information received from the company shows that on April 17, 2000, A and M, Inc. purchased Homemaker Industries, Inc. and became known as A and M Inc., d/b/a Homemaker. Information also shows that workers separated from employment at Homemaker Industries, Inc. had their wages reported under a separate unemployment insurance (UI) tax account for A and M, Inc., d/b/a Homemaker.

Accordingly, the Department is amending the certification to properly reflect this matter.

The intent of the Department's certification is to include all workers of Homemaker Industries, Inc. who were adversely affected by the shift of production to Mexico.

The amended notice applicable to NAFTA—03151 is hereby issued as follows:

All workers of A and M, Inc., d/b/a Homemaker, North Charleston, South Carolina who became totally or partially separated from employment on or after May 4, 1998 through June 25, 2001 are eligible to apply for NAFTA–TAA under Section 250 of the Trade Act of 1974.

Signed at Washington, D.C. this 27th day of April, 2000.

Grant D. Beale,

Program Manager, Division of Trade Adjustment Assistance.

[FR Doc. 00–11118 Filed 5–3–00; 8:45 am]

BILLING CODE 4510–30–M

DEPARTMENT OF LABOR

Employment and Training Administration

[TA–W–37,011 and NAFTA–3527]

Cooper Energy Services, Grove City, PA; Notice of Affirmative Determination Regarding Application for Reconsideration

By letter of January 31, 2000, the petitioners request administrative reconsideration of the Department of Labor's Notice of Negative Determinations Regarding Eligibility to Apply for Worker Adjustment Assistance (TAA) and North American Free Trade Agreement-Transitional Adjustment Assistance (NAFTA–TAA) application to workers and former workers of the subject firm. The denial notices were signed on January 14, 2000, and published in the **Federal Register** on February 4, 2000 (65 FR 5690) and (65 FR 5691), respectively.

The petitioners present evidence that some of the production performed by workers at the subject firm has been shifted to Canada and is returning to the United States.

Conclusion

After careful review of the application, I conclude that the claim is of sufficient weight to justify reconsideration of the Department of

Labor's prior decision. The application is, therefore, granted.

Signed at Washington, D.C. this 27th day of April 2000.

Grant D. Beale,

Program Manager, Division of Trade Adjustment Assistance.

[FR Doc. 00–11109 Filed 5–3–00; 8:45 am]

BILLING CODE 4510–03–M

DEPARTMENT OF LABOR

Employment and Training Administration

[TA–W–36,108 & NAFTA 3,104]

Sherman Lumber Company, Sherman Station, ME; Notice of Negative Determination on Reconsideration

On August 17, 1999, the Department issued an Affirmative Determination Regarding Application for Reconsideration for the workers and former workers of the subject firm. The notice was published in the **Federal Register** on August 31, 1999 (64 FR 47521).

The Department initially denied TAA to workers of Sherman Lumber because the ''contributed importantly'' group eligibility requirement of Section 222(3) of the Trade Act of 1974, as amended, was not met. The workers at the subject firm were engaged in employment related to the production of maple flooring.

The petitioner asserted that sufficient customers have not been surveyed and requested that the Department survey bids lost by the subject firm.

On reconsideration, the Department requested that the subject firm provide additional information about customers and lost bids. The Department conducted a survey of lost domestic bids by the subject firm. The respondents indicated that their purchase of maple flooring were from domestic manufacturers.

Conclusion

After reconsideration, I affirm the original notice of negative determination of eligibility to apply for worker adjustment assistance for workers and former workers of Sherman Lumber, Sherman Station, Maine.

Signed at Washington, DC, this 21st day of April, 2000.

Edward A. Tomchick,

Program Manager, Division of Trade Adjustment Assistance.

[FR Doc. 00–11120 Filed 5–3–00; 8:45 am]

BILLING CODE 4510–30–M

DEPARTMENT OF LABOR

Employment and Training Administration

NAFTA–3369

Superior—Essex, Pauline, KS; Notice of Negative Determination on Reconsideration

On March 20, 2000, the Department issued an Affirmative Determination Regarding Application for Reconsideration for the workers and former workers of the subject firm. United Steelworkers of America stated that the production of copper rod was shifted from the Pauline, Kansas plant of Superior-Essex to Mexico. The notice was published in the **Federal Register** on March 27, 2000 (65 FR 16227).

The Department initially denied NAFTA–TAA to workers producing copper building wire at Superior-Essex, Pauline, Kansas based on the finding that criteria (3) and (4) of the group eligibility requriements of paragraph (a)(1) of Section 250 of the Trade Act, as amended, were not met. The subject firm did not increase imports of like products from Canada or Mexico, nor did it shift production to Canada or Mexico.

New information obtained on reconsideration regarding the production of copper rod at the subject plant show that prior to the plant closure, sales and production of copper rod increased from 1998 to 1999. Superior—Essex did not import copper rod form Mexico or Canada, nor did it shift production from Pauline, Kansas to those countries. The copper rod produced by workers at the Superior-Essex, Pauline, Kansas, is being transferred to other domestic plants of the subject firm.

Conclusion

After reconsideration, I affirm the original notice of negative determination of eligibility to apply for NAFTA–TAA for workers and former workers of Superior—Essex, Pauline, Kansas.

Signed at Washington, D.C., this 20th day of April 2000.

Edward A. Tomchick,

Director, Division of Trade Adjustment Assistance.

[FR Doc. 00–11119 Filed 5–3–00; 8:45 am]

BILLING CODE 4510–30–M

DEPARTMENT OF LABOR

Employment and Training Administration

[NAFTA—02738A]

Talon, Inc., Division of Coats North America, Lake City, SC; Including Temporary Workers of Will Staff Personnel Services, Greenville, SC; Amended Certification Regarding Eligibility To Apply for NAFTA-Transitional Adjustment Assistance

In accordance with Section 250(a), Subchapter D, Chapter 2, title II, of the Trade Act of 1974 (19 USC 2273), the Department of Labor issued a Certification for NAFTA Transitional Adjustment Assistance on December 11, 1998, applicable to workers of Talon, Inc., Division of Coats North America, Lake City, South Carolina. The notice was published in the **Federal Register** on December 23, 1998 (63 FR 71166).

At the request of the States agency, the Department reviewed the certification for workers of the subject firm. New information provided by the State shows that some workers separated from employment at Talon, Inc. had their wages reported under a separate unemployment insurance (UI) tax account at Will Staff Personnel Services. Workers from Will Staff Personnel Services produced zippers at the Lake City, South Carolina location of Talon, Inc.

Based on these findings, the Department is amending the certification to include workers from Will Staff Personnel Services, Greenville, South Carolina who were engaged in the production of zippers at Talon, Inc., Lake City, South Carolina.

The intent of the Department's certification is to include all workers of Talon, Inc, Division of Coats North America adversely affected by the shift of production to Mexico.

The amended notice applicable to NAFTA—02738A is hereby issued as follows:

''All workers of Talon, Inc., Division of Coats North America, Lake City, South Carolina (NAFTA—2738A), including temporary workers of Will Staff Personnel Services, Greenville, South Carolina, engaged in employment related to the production of zippers for Talon, Inc., Division of Coats North America, Lake City, South Carolina who became totally or partially separated from employment on or after November 16, 1997 through December 11, 2000 are eligible to apply for NAFTA–TAA under Section 250 of the Trade Act of 1974.

Signed at Washington, D.C. this 27th day of April, 2000.

Grant D. Beale,

Program Manager, Office of Trade Adjustment Assistance.

[FR Doc. 00–11117 Filed 5–3–00; 8:45 am]

BILLING CODE 4510–30–M

DEPARTMENT OF LABOR

Employment and Training Administration

[NAFTA–03669]

Mineral Ridge Resources, Inc. Silver Peak, NV, Dismissal of Application for Reconsideration

Pursuant to 29 CFR 90.18(C) an application for administrative reconsideration was filed with the Director of the Division of Trade Adjustment Assistance for workers at Mineral Ridge Resources, Inc., Silver Peak, Nevada. The application contained no new substantial information which would bear importantly on the Department's determination. Therefore, dismissal of the application was issued.

NAFTA—03669; Mineral Ridge Resources, Inc. Silver Peak, Nevada (April 26, 2000)

Signed at Washington, D.C. this 27th day of April, 2000.

Grant D. Beale,

Program Manager, Division of Trade Adjustment Assistance.

[FR Doc. 00–11113 Filed 5–3–00; 8:45 am]

BILLING CODE 4510–30–M

DEPARTMENT OF LABOR

Pension and Welfare Benefits Administration

[Prohibited Transaction Exemption 2000–17; Exemption Application No. D–10730, et al.]

Grant of Individual Exemptions; Earl R. Waddell & Sons, Inc. Profit Sharing Plan and Trust (the Plan)

AGENCY: Pension and Welfare Benefits Administration, Labor.

ACTION: Grant of individual exemptions.

SUMMARY: This document contains exemptions issued by the Department of Labor (the Department) from certain of the prohibited transaction restrictions of the Employee Retirement Income Security Act of 1974 (the Act) and/or the Internal Revenue Code of 1986 (the Code).

Notices were published in the **Federal Register** of the pendency before the Department of proposals to grant such exemptions. The notices set forth a summary of facts and representations contained in each application for exemption and referred interested persons to the respective applications for a complete statement of the facts and representations. The applications have been available for public inspection at the Department in Washington, D.C. The notices also invited interested persons to submit comments on the requested exemptions to the Department. In addition the notices stated that any interested person might submit a written request that a public hearing be held (where appropriate). The applicants have represented that they have complied with the requirements of the notification to interested persons. No public comments and no requests for a hearing, unless otherwise stated, were received by the Department.

The notices of proposed exemption were issued and the exemptions are being granted solely by the Department because, effective December 31, 1978, section 102 of Reorganization Plan No. 4 of 1978, 5 U.S.C. App. 1 (1996), transferred the authority of the Secretary of the Treasury to issue exemptions of the type proposed to the Secretary of Labor.

Statutory Findings

In accordance with section 408(a) of the Act and/or section 4975(c)(2) of the Code and the procedures set forth in 29 CFR Part 2570, Subpart B (55 FR 32836, 32847, August 10, 1990) and based upon the entire record, the Department makes the following findings:

(a) The exemptions are administratively feasible;

(b) They are in the interests of the plans and their participants and beneficiaries; and

(c) They are protective of the rights of the participants and beneficiaries of the plans.

Earl R. Waddell & Sons, Inc., Profit Sharing Plan and Trust (the Plan), Located in Fort Worth, TX

[Prohibited Transaction Exemption 2000–17; Exemption Application No. D–10730]

Exemption

The restrictions of sections 406(a), 406(b)(1) and (2) of the Act and the sanctions resulting from the application of section 4975 of the Code, by reason of section 4975(c)(1)(A) through (E) of the Code, shall not apply to the arrangement between the Plan and Earl R. Waddell & Sons, Inc. (The Waddell Company) involving the sale (the Sale) by the Plan of 5,183.840 shares of the Waddell Holdings Stock to the Waddell Company, provided the following conditions are satisfied:

(A) The Sale price is the greater of $280.29 per share or the Waddell Holdings Stock's current fair market value as of the date of the Sale;

(B) The current fair market value of the Waddell Holdings Stock is determined by a qualified, independent appraiser;

(C) The Plan incurs no commissions or expenses associated with the Sale;

(D) The Waddell Company pays in cash to the Plan an additional $191,126, an amount equal to an eight percent (8%) per annum rate of return on the Waddell Holdings Stock, as converted, for each year the Plan owned the Waddell Holdings Stock (the Interest Payment); and

(E) The Plan's Trustees will not receive any portion of the Interest Payment.

For a more complete statement of the facts and representations supporting the Department's decision to grant this exemption, refer to notice of proposed exemption published on February 29, 2000 at 65 FR 10828.

FOR FURTHER INFORMATION CONTACT: Mr. J. Martin Jara of the Department, telephone (202) 219–8881. (This is not a toll-free number.)

Rhode Island Carpenters Local No. 94 Pension Fund (the Pension Plan), Rhode Island Carpenters Local No. 94 Apprenticeship Fund (the Apprenticeship Plan; collectively, the Plans), and Rhode Island Carpenters Local No. 94 (the Union), Located in Warwick, Rhode Island

[Prohibited Transaction Exemption 2000–18; Exemption Application No. D–10739 and L–10740]

Exemption

The restrictions of sections 406(a), 406(b)(1) and (2) of the Act and the sanctions resulting from the application of section 4975 of the Code, by reason of section 4975(c)(1)(A) through (E) of the Code, shall not apply to: (1) The cash sale (the Parking Lot Sale) of improved real property (the Parking Lot) by Rhode Island Carpenters Apprenticeship Fund (the Apprenticeship Plan) to the Carpenters Local No. 94 (the Union) for the greater of (a) $173,000 or (b) the fair market value of the Parking Lot as of the date of the Parking Lot Sale; and (2) the cash sale (the Building Sale) of improved real property (the Building) by the Rhode Island Carpenters Local No. 94 Pension Fund (the Pension Plan) to the Union, for the greater of (a) $777,000 or (b) the fair market value of the Building as of

the date of the Building Sale, provided the following conditions are satisfied:

(A) The Parking Lot Sale occurs at a price not less than the fair market value of the Parking Lot, as determined by a qualified independent appraiser;

(B) The Building Sale occurs at a price not less than the fair market value of the Building, as determined by a qualified independent appraiser;

(C) The Building Sale and the Parking Lot Sale (collectively, the Sales) are one-time transactions for cash; and

(D) The Plans pay no fees or commissions in connection with the Sales.

For a more complete statement of the facts and representations supporting the Department's decision to grant this exemption, refer to the notice of proposed exemption published on February 29, 2000 at 65 FR 10829.

FOR FURTHER INFORMATION CONTACT:

J. Martin Jara at the United States Department of Labor, telephone (202) 219–8883 (this is not a toll free number).

BOSC, Inc. (BOSC), Located in Tulsa, Oklahoma

[Prohibited Transaction Exemption 2000–19; Exemption Application No. D–10834]

Exemption

I. Transactions

A. The restrictions of sections 406(a) and 407(a) of the Act and the taxes imposed by section 4975(a) and (b) of the Code by reason of section 4975(c)(1)(A) through (D) of the Code shall not apply to the following transactions involving trusts and certificates evidencing interests therein:

(1) The direct or indirect sale, exchange or transfer of certificates in the initial issuance of certificates between the sponsor or underwriter and an employee benefit plan when the sponsor, servicer, trustee or insurer of a trust, the underwriter of the certificates representing an interest in the trust, or an obligor is a party in interest with respect to such plan;

(2) The direct or indirect acquisition or disposition of certificates by a plan in the secondary market for such certificates; and

(3) The continued holding of certificates acquired by a plan pursuant to subsection I.A.(1) or (2).

Notwithstanding the foregoing, section I.A. does not provide an exemption from the restrictions of sections 406(a)(1)(E), 406(a)(2) and 407 for the acquisition or holding of a certificate on behalf of an Excluded Plan by any person who has discretionary authority or renders investment advice with respect to the assets of that Excluded Plan.[1]

B. The restrictions of sections 406(b)(1) and 406(b)(2) of the Act, and the taxes imposed by section 4975(a) and (b) of the Code by reason of section 4975(c)(1)(E) of the Code, shall not apply to:

(1) The direct or indirect sale, exchange or transfer of certificates in the initial issuance of certificates between the sponsor or underwriter and a plan when the person who has discretionary authority or renders investment advice with respect to the investment of plan assets in the certificates is (a) an obligor with respect to 5 percent or less of the fair market value of obligations or receivables contained in the trust, or (b) an affiliate of a person described in (a); if:

(i) The plan is not an Excluded Plan;

(ii) Solely in the case of an acquisition of certificates in connection with the initial issuance of the certificates, at least 50 percent of each class of certificates in which plans have invested is acquired by persons independent of the members of the Restricted Group and at least 50 percent of the aggregate interest in the trust is acquired by persons independent of the Restricted Group;

(iii) A plan's investment in each class of certificates does not exceed 25 percent of all of the certificates of that class outstanding at the time of the acquisition; and (iv) immediately after the acquisition of the certificates, no more than 25 percent of the assets of a plan with respect to which the person has discretionary authority or renders investment advice are invested in certificates representing an interest in a trust containing assets sold or serviced by the same entity.[2] For purposes of this paragraph B.(1)(iv) only, an entity will not be considered to service assets contained in a trust if it is merely a subservicer of that trust;

(2) The direct or indirect acquisition or disposition of certificates by a plan in the secondary market for such certificates, provided that the conditions set forth in paragraphs B.(1)(i), (iii) and (iv) are met; and

(3) The continued holding of certificates acquired by a plan pursuant to subsection I.B.(1) or (2).

C. The restrictions of sections 406(a), 406(b) and 407(a) of the Act, and the taxes imposed by section 4975(a) and (b) of the Code by reason of section 4975(c) of the Code, shall not apply to transactions in connection with the servicing, management and operation of a trust, provided:

(1) Such transactions are carried out in accordance with the terms of a binding pooling and servicing arrangement; and

(2) The pooling and servicing agreement is provided to, or described in all material respects in, the prospectus or private placement memorandum provided to investing plans before they purchase certificates issued by the trust.[3]

Notwithstanding the foregoing, section I.C. does not provide an exemption from the restrictions of section 406(b) of the Act, or from the taxes imposed by reason of section 4975(c) of the Code, for the receipt of a fee by a servicer of the trust from a person other than the trustee or sponsor, unless such fee constitutes a ''qualified administrative fee'' as defined in section III.S.

D. The restrictions of sections 406(a) and 407(a) of the Act, and the taxes imposed by sections 4975(a) and (b) of the Code by reason of sections 4975(c)(1)(A) through (D) of the Code, shall not apply to any transactions to which those restrictions or taxes would otherwise apply merely because a person is deemed to be a party in interest or disqualified person (including a fiduciary) with respect to a plan by virtue of providing services to the plan (or by virtue of having a relationship to such service provider described in section 3(14)(F), (G), (H) or (I) of the Act or section 4975(e)(2)(F), (G), (H) or (I) of the Code), solely because of the plan's ownership of certificates.

II. General Conditions

A. The relief provided under Part I is available only if the following conditions are met:

(1) The acquisition of certificates by a plan is on terms (including the certificate price) that are at least as

[1] Section I.A. provides no relief from sections 406(a)(1)(E), 406(a)(2) and 407 for any person rendering investment advice to an Excluded Plan within the meaning of section 3(21)(A)(ii) and regulation 29 CFR 2510.3–21(c).

[2] For purposes of this proposed exemption, each plan participating in a commingled fund (such as a bank collective trust fund or insurance company pooled separate account) shall be considered to own the same proportionate undivided interest in each asset of the commingled fund as its proportionate interest in the total assets of the commingled fund as calculated on the most recent preceding valuation date of the fund.

[3] In the case of a private placement memorandum, such memorandum must contain substantially the same information that would be disclosed in a prospectus if the offering of the certificates were made in a registered public offering under the Securities Act of 1933. In the Department's view, the private placement memorandum must contain sufficient information to permit plan fiduciaries to make informed investment decisions.

favorable to the plan as they would be in an arm's-length transaction with an unrelated party;

(2) The rights and interests evidenced by the certificates are not subordinated to the rights and interests evidenced by other certificates of the same trust;

(3) The certificates acquired by the plan have received a rating from a rating agency (as defined in section III.W.) at the time of such acquisition that is in one of the three highest generic rating categories;

(4) The trustee is not an affiliate of any other member of the Restricted Group. However, the trustee shall not be considered to be an affiliate of a servicer solely because the trustee has succeeded to the rights and responsibilities of the servicer pursuant to the terms of a pooling and servicing agreement providing for such succession upon the occurrence of one or more events of default by the servicer;

(5) The sum of all payments made to and retained by the underwriters in connection with the distribution or placement of certificates represents not more than reasonable compensation for underwriting or placing the certificates; the sum of all payments made to and retained by the sponsor pursuant to the assignment of obligations (or interests therein) to the trust represents not more than the fair market value of such obligations (or interests); and the sum of all payments made to and retained by the servicer represents not more than reasonable compensation for the servicer's services under the pooling and servicing agreement and reimbursement of the servicer's reasonable expenses in connection therewith;

(6) The plan investing in such certificates is an ''accredited investor'' as defined in Rule 501(a)(1) of Regulation D of the Securities and Exchange Commission under the Securities Act of 1933; and

(7) In the event that the obligations used to fund a trust have not all been transferred to the trust on the closing date, additional obligations as specified in subsection III.B.(1) may be transferred to the trust during the pre-funding period (as defined in section III.BB.) in exchange for amounts credited to the pre-funding account (as defined in section III.Z.), provided that:

(a) The pre-funding limit (as defined in section III.AA.) is not exceeded;

(b) All such additional obligations meet the same terms and conditions for eligibility as those of the original obligations used to create the trust corpus (as described in the prospectus or private placement memorandum and/or pooling and servicing agreement for such certificates), which terms and conditions have been approved by a rating agency. Notwithstanding the foregoing, the terms and conditions for determining the eligibility of an obligation may be changed if such changes receive prior approval either by a majority of the outstanding certificate-holders or by a rating agency;

(c) The transfer of such additional obligations to the trust during the pre-funding period does not result in the certificates receiving a lower credit rating from a rating agency upon termination of the pre-funding period than the rating that was obtained at the time of the initial issuance of the certificates by the trust;

(d) The weighted average annual percentage interest rate (the average interest rate) for all of the obligations in the trust at the end of the pre-funding period will not be more than 100 basis points lower than the average interest rate for the obligations which were transferred to the trust on the closing date;

(e) In order to ensure that the characteristics of the receivables actually acquired during the pre-funding period are substantially similar to those which were acquired as of the closing date, the characteristics of the additional obligations will be either monitored by a credit support provider or other insurance provider which is independent of the sponsor, or an independent accountant retained by the sponsor will provide the sponsor with a letter (with copies provided to the rating agency, the underwriter and the trustees) stating whether or not the characteristics of the additional obligations conform to the characteristics of such obligations described in the prospectus, private placement memorandum and/or pooling and servicing agreement. In preparing such letter, the independent accountant will use the same type of procedures as were applicable to the obligations which were transferred as of the closing date;

(f) The pre-funding period shall be described in the prospectus or private placement memorandum provided to investing plans; and

(g) The trustee of the trust (or any agent with which the trustee contracts to provide trust services) will be a substantial financial institution or trust company experienced in trust activities and familiar with its duties, responsibilities and liabilities as a fiduciary under the Act. The trustee, as the legal owner of the obligations in the trust, will enforce all the rights created in favor of certificateholders of such trust, including employee benefit plans subject to the Act.

B. Neither any underwriter, sponsor, trustee, servicer, insurer, nor any obligor, unless it or any of its affiliates has discretionary authority or renders investment advice with respect to the plan assets used by a plan to acquire certificates, shall be denied the relief provided under Part I, if the provision of subsection II.A.(6) above is not satisfied with respect to acquisition or holding by a plan of such certificates, provided that (1) such condition is disclosed in the prospectus or private placement memorandum; and (2) in the case of a private placement of certificates, the trustee obtains a representation from each initial purchaser which is a plan that it is in compliance with such condition, and obtains a covenant from each initial purchaser to the effect that, so long as such initial purchaser (or any transferee of such initial purchaser's certificates) is required to obtain from its transferee a representation regarding compliance with the Securities Act of 1933, any such transferees will be required to make a written representation regarding compliance with the condition set forth in subsection II.A.(6) above.

III. Definitions

For purposes of this exemption:

A. ''Certificate'' means:

(1) a certificate—

(a) that represents a beneficial ownership interest in the assets of a trust; and

(b) that entitles the holder to pass-through payments of principal, interest, and/or other payments made with respect to the assets of such trust; or

(2) a certificate denominated as a debt instrument—

(a) that represents an interest in a Real Estate Mortgage Investment Conduit (REMIC) or a Financial Asset Securitization Investment Trust (FASIT) within the meaning of section 860D(a) or section 860L, respectively, of the Internal Revenue Code of 1986; and

(b) that is issued by, and is an obligation of, a trust; with respect to certificates defined in (1) and (2) above for which BOSC or any of its affiliates is either (i) the sole underwriter or the manager or co-manager of the underwriting syndicate, or (ii) a selling or placement agent.

For purposes of this proposed exemption, references to ''certificates representing an interest in a trust'' include certificates denominated as debt which are issued by a trust.

B. ''Trust'' means an investment pool, the corpus of which is held in trust and consists solely of:

(1) (a) secured consumer receivables that bear interest or are purchased at a

discount (including, but not limited to, home equity loans and obligations secured by shares issued by a cooperative housing association); and/or

(b) secured credit instruments that bear interest or are purchased at a discount in transactions by or between business entities (including, but not limited to, qualified equipment notes secured by leases, as defined in section III.T); and/or

(c) obligations that bear interest or are purchased at a discount and which are secured by single-family residential, multi-family residential and commercial real property (including obligations secured by leasehold interests on commercial real property); and/or

(d) obligations that bear interest or are purchased at a discount and which are secured by motor vehicles or equipment, or qualified motor vehicle leases (as defined in section III.U); and/or

(e) ''guaranteed governmental mortgage pool certificates,'' as defined in 29 CFR 2510.3–101(i)(2); and/or

(f) fractional undivided interests in any of the obligations described in clauses (a)–(e) of this section B.(1);

(2) property which had secured any of the obligations described in subsection B.(1);

(3) (a) undistributed cash or temporary investments made therewith maturing no later than the next date on which distributions are to made to be certificateholders; and/or

(b) cash or investments made therewith which are credited to an account to provide payments to certificateholders pursuant to any yield supplement agreement or similar yield maintenance arrangement to supplement the interest rates otherwise payable on obligations described in subsection III.B.(1) held in the trust, provided that such arrangements do not involve swap agreements or other notional principal contracts; and/or

(c) cash transferred to the trust on the closing date and permitted investments made therewith which:

(i) are credited to a pre-funding account established to purchase additional obligations with respect to which the conditions set forth in clauses (a)–(g) of subsection II.A.(7) are met and/or;

(ii) are credited to a capitalized interest account (as defined in section III.X.); and

(iii) are held in the trust for a period ending no later than the first distribution date to certificateholders occurring after the end of the pre-funding period.

For purposes of this clause (c) of subsection III.B.(3), the term ''permitted investments'' means investments which are either: (i) Direct obligations of, or obligations fully guaranteed as to timely payment of principal and interest by the United States, or any agency or instrumentality thereof, provided that such obligations are backed by the full faith and credit of the United States or (ii) have been rated (or the obligor has been rated) in one of the three highest generic rating categories by a rating agency; are described in the pooling and servicing agreement; and are permitted by the rating agency; and

(4) rights of the trustee under the pooling and servicing agreement, and rights under any insurance policies, third-party guarantees, contracts of suretyship, yield supplement agreements described in clause (b) of subsection III.B.(3) and other credit support arrangements with respect to any obligations described in subsection III.B.(1).

Notwithstanding the foregoing, the term ''trust'' does not include any investment pool unless: (i) The investment pool consists only of assets of the type described in clauses (a) through (f) of subsection III.B.(1) which have been included in other investment pools, (ii) certificates evidencing interests in such other investment pools have been rated in one of the three highest generic rating categories by a rating agency for at least one year prior to the plan's acquisition of certificates pursuant to this exemption, and (iii) certificates evidencing interests in such other investment pools have been purchased by investors other than plans for at least one year prior to the plan's acquisition of certificates pursuant to this exemption.

C. ''Underwriter'' means:

(1) BOSC;

(2) any person directly or indirectly, through one or more intermediaries, controlling, controlled by or under common control with BOSC; or

(3) any member of an underwriting syndicate or selling group of which BOSC or a person described in (2) is a manager or co-manager with respect to the certificates.

D. ''Sponsor'' means the entity that organizes a trust by depositing obligations therein in exchange for certificates.

E. ''Master Servicer'' means the entity that is a party to the pooling and servicing agreement relating to trust assets and is fully responsible for servicing, directly or through subservicers, the assets of the trust.

F. ''Subservicer'' means an entity which, under the supervision of and on behalf of the master servicer, services obligations contained in the trust, but is not a party to the pooling and servicing agreement.

G. ''Servicer'' means any entity which services obligations contained in the trust, including the master servicer and any subservicer.

H. ''Trustee'' means the trustee of the trust, and in the case of certificates which are denominated as debt instruments, also means the trustee of the indenture trust.

I. ''Insurer'' means the insurer or guarantor of, or provider of other credit support for, a trust. Notwithstanding the foregoing, a person is not an insurer solely because it holds securities representing an interest in a trust which are of a class subordinated to certificates representing an interest in the same trust.

J. ''Obligor'' means any person, other than the insurer, that is obligated to make payments with respect to any obligation or receivable included in the trust. Where a trust contains qualified motor vehicle leases or qualified equipment notes secured by leases, ''obligor'' shall also include any owner of property subject to any lease included in the trust, or subject to any lease securing an obligation included in the trust.

K. ''Excluded Plan'' means any plan with respect to which any member of the Restricted Group is a ''plan sponsor'' within the meaning of section 3(16)(B) of the Act.

L. ''Restricted Group'' with respect to a class of certificates means:

(1) each underwriter;

(2) each insurer;

(3) the sponsor;

(4) the trustee;

(5) each servicer;

(6) any obligor with respect to obligations or receivables included in the trust constituting more than 5 percent of the aggregate unamortized principal balance of the assets in the trust, determined on the date of the initial issuance of certificates by the trust; or

(7) any affiliate of a person described in (1)–(6) above.

M. ''Affiliate'' of another person includes:

(1) Any person directly or indirectly, through one or more intermediaries, controlling, controlled by, or under common control with such other person;

(2) Any officer, director, partner, employee, relative (as defined in section 3(15) of the Act), a brother, a sister, or a spouse of a brother or sister of such other person; and

(3) Any corporation or partnership of which such other person is an officer, director or partner.

N. ''Control'' means the power to exercise a controlling influence over the management or policies of a person other than an individual.

O. A person will be ''independent'' of another person only if:

(1) such person is not an affiliate of that other person; and

(2) the other person, or an affiliate thereof, is not a fiduciary who has investment management authority or renders investment advice with respect to any assets of such person.

P. ''Sale'' includes the entrance into a forward delivery commitment (as defined in section Q below), provided:

(1) The terms of the forward delivery commitment (including any fee paid to the investing plan) are no less favorable to the plan than they would be in an arm's-length transaction with an unrelated party;

(2) The prospectus or private placement memorandum is provided to an investing plan prior to the time the plan enters into the forward delivery commitment; and

(3) At the time of the delivery, all conditions of this proposed exemption (if granted) applicable to sales are met.

Q. ''Forward delivery commitment'' means a contract for the purchase or sale of one or more certificates to be delivered at an agreed future settlement date. The term includes both mandatory contracts (which contemplate obligatory delivery and acceptance of the certificates) and optional contracts (which give one party the right but not the obligation to deliver certificates to, or demand delivery of certificates from, the other party).

R. ''Reasonable compensation'' has the same meaning as that term is defined in 29 CFR 2550.408c–2.

S. ''Qualified Administrative Fee'' means a fee which meets the following criteria:

(1) the fee is triggered by an act or failure to act by the obligor other than the normal timely payment of amounts owing in respect of the obligations;

(2) the servicer may not charge the fee absent the act or failure to act referred to in (1);

(3) the ability to charge the fee, the circumstances in which the fee may be charged, and an explanation of how the fee is calculated are set forth in the pooling and servicing agreement; and

(4) the amount paid to investors in the trust will not be reduced by the amount of any such fee waived by the servicer.

T. ''Qualified Equipment Note Secured By A Lease'' means an equipment note:

(1) which is secured by equipment which is leased;

(2) which is secured by the obligation of the lessee to pay rent under the equipment lease; and

(3) with respect to which the trust's security interest in the equipment is at least as protective of the rights of the trust as would be the case if the equipment note were secured only by the equipment and not the lease.

U. ''Qualified Motor Vehicle Lease'' means a lease of a motor vehicle where:

(1) the trust owns or holds a security interest in the lease;

(2) the trust owns or holds a security interest in the leased motor vehicle; and

(3) the trust's security interest in the leased motor vehicle is at least as protective of the trust's rights as would be the case if the trust consisted of motor vehicle installment loan contracts.

V. ''Pooling and Servicing Agreement'' means the agreement or agreements among a sponsor, a servicer and the trustee establishing a trust. In the case of certificates which are denominated as debt instruments, ''Pooling and Servicing Agreement'' also includes the indenture entered into by the trustee of the trust issuing such certificates and the indenture trustee.

W. ''Rating Agency'' means Standard & Poor's Structured Rating Group (S&P's), Moody's Investors Service, Inc. (Moody's), Duff & Phelps Credit Rating Co. (D & P) or Fitch IBCA, Inc. (Fitch), or their successors.

X. ''Capitalized Interest Account'' means a trust account: (i) which is established to compensate certificateholders for shortfalls, if any, between investment earnings on the pre-funding account and the pass-through rate payable under the certificates; and (ii) which meets the requirements of clause (c) of subsection III.B.(3).

Y. ''Closing Date'' means the date the trust is formed, the certificates are first issued and the trust's assets (other than those additional obligations which are to be funded from the pre-funding account pursuant to subsection II.A.(7)) are transferred to the trust.

Z. ''Pre-Funding Account'' means a trust account: (i) which is established to purchase additional obligations, which obligations meet the conditions set forth in clauses (a)–(g) of subsection II.A.(7); and (ii) which meets the requirements of clause (c) of subsection III.B.(3).

AA. ''Pre-Funding Limit'' means a percentage or ratio of the amount allocated to the pre-funding account, as compared to the total principal amount of the certificates being offered which is less than or equal to 25 percent.

BB. ''Pre-Funding Period'' means the period commencing on the closing date and ending no later than the earliest to occur of: (i) the date the amount on deposit in the pre-funding account is less than the minimum dollar amount specified in the pooling and servicing agreement; (ii) the date on which an event of default occurs under the pooling and servicing agreement; or (iii) the date which is the later of three months or 90 days after the closing date.

CC. ''BOSC'' means BOSC, Inc. an Oklahoma corporation, and its affiliates.

The Department notes that this exemption is included within the meaning of the term ''Underwriter Exemption'' as it is defined in section V(h) of Prohibited Transaction Exemption 95–60 (60 FR 35925, July 12, 1995), the Class Exemption for Certain Transactions Involving Insurance Company General Accounts (see 60 FR at 35932).

For a more complete statement of the facts and representations supporting the Department's decision to grant this exemption, refer to notice of proposed exemption published on March 14, 2000 at 65 FR 13844.

FOR FURTHER INFORMATION CONTACT: Mr. J. Martin Jara of the Department, telephone (202) 219–8881. (This is not a toll-free number.)

Taylor M. Cole IRA Rollover (the IRA), Located in Deerfield, VA

[Prohibited Transaction Exemption 2000–20; Exemption Application No. D–10859]

Exemption

The sanctions resulting from the application of section 4975 of the Code, by reason of section 4975(c)(1)(A) through (E) of the Code, shall not apply to the proposed sale of certain unimproved property (the Property) by the IRA to Taylor M. Cole, the IRA participant and a disqualified person with respect to the IRA;[4] provided that the following conditions are met:

(a) The sale is a one-time cash transaction;

(b) The IRA receives the current fair market value for the Property, as established at the time of the sale by an independent qualified appraiser; and

(c) The IRA pays no commissions or other expenses associated with the sale.

For a more complete statement of the facts and representations supporting the Department's decision to grant this exemption, refer to the notice of proposed exemption published on March 22, 2000 at 65 FR 15368.

FOR FURTHER INFORMATION CONTACT: Ekaterina A. Uzlyan of the Department

[4] Pursuant to CFR 2510.3–2(d), there is no jurisdiction with respect to the IRA under Title I of the Act. However, there is jurisdiction under Title II of the Act pursuant to section 4975 of the Code.

at (202) 219–8883. (This is not a toll-free number.)

General Information

The attention of interested persons is directed to the following:

(1) The fact that a transaction is the subject of an exemption under section 408(a) of the Act and/or section 4975(c)(2) of the Code does not relieve a fiduciary or other party in interest or disqualified person from certain other provisions to which the exemptions does not apply and the general fiduciary responsibility provisions of section 404 of the Act, which among other things require a fiduciary to discharge his duties respecting the plan solely in the interest of the participants and beneficiaries of the plan and in a prudent fashion in accordance with section 404(a)(1)(B) of the Act; nor does it affect the requirement of section 401(a) of the Code that the plan must operate for the exclusive benefit of the employees of the employer maintaining the plan and their beneficiaries;

(2) These exemptions are supplemental to and not in derogation of, any other provisions of the Act and/or the Code, including statutory or administrative exemptions and transactional rules. Furthermore, the fact that a transaction is subject to an administrative or statutory exemption is not dispositive of whether the transaction is in fact a prohibited transaction; and

(3) The availability of these exemptions is subject to the express condition that the material facts and representations contained in each application accurately describes all material terms of the transaction which is the subject of the exemption.

Signed at Washington, D.C., this 1st day of May, 2000.

Ivan Strasfeld,

Director of Exemption Determination, Pension and Welfare Benefits Administration, U.S. Department of Labor.

[FR Doc. 00–11128 Filed 5–3–00; 8:45 am]

BILLING CODE 4510–29–P

DEPARTMENT OF LABOR

Pension and Welfare Benefits Administration

[Application No. D–10789, et al.]

Proposed Exemptions; Fortis, Inc. Employees' Uniform Profit Sharing Plan (the Fortis Plan)

AGENCY: Pension and Welfare Benefits Administration, Labor.

ACTION: Notice of Proposed Exemptions.

SUMMARY: This document contains notices of pendency before the Department of Labor (the Department) of proposed exemptions from certain of the prohibited transaction restrictions of the Employee Retirement Income Security Act of 1974 (the Act) and/or the Internal Revenue Code of 1986 (the Code).

Written Comments and Hearing Requests

All interested persons are invited to submit written comments or request for a hearing on the pending exemptions, unless otherwise stated in the Notice of Proposed Exemption, within 45 days from the date of publication of this **Federal Register** Notice. Comments and requests for a hearing should state: (1) the name, address, and telephone number of the person making the comment or request, and (2) the nature of the person's interest in the exemption and the manner in which the person would be adversely affected by the exemption. A request for a hearing must also state the issues to be addressed and include a general description of the evidence to be presented at the hearing.

ADDRESSES: All written comments and request for a hearing (at least three copies) should be sent to the Pension and Welfare Benefits Administration, Office of Exemption Determinations, Room N–5649, U.S. Department of Labor, 200 Constitution Avenue, N.W., Washington, D.C. 20210. Attention: Application No.__, stated in each Notice of Proposed Exemption. The applications for exemption and the comments received will be available for public inspection in the Public Documents Room of the Pension and Welfare Benefits Administration, U.S. Department of Labor, Room N–5638, 200 Constitution Avenue, N.W., Washington, D.C. 20210.

Notice to Interested Persons

Notice of the proposed exemptions will be provided to all interested persons in the manner agreed upon by the applicant and the Department within 15 days of the date of publication in the **Federal Register**. Such notice shall include a copy of the notice of proposed exemption as published in the **Federal Register** and shall inform interested persons of their right to comment and to request a hearing (where appropriate).

SUPPLEMENTARY INFORMATION: The proposed exemptions were requested in applications filed pursuant to section 408(a) of the Act and/or section 4975(c)(2) of the Code, and in accordance with procedures set forth in 29 CFR Part 2570, Subpart B (55 FR 32836, 32847, August 10, 1990). Effective December 31, 1978, section 102 of Reorganization Plan No. 4 of 1978, 5 U.S.C. App. 1 (1996), transferred the authority of the Secretary of the Treasury to issue exemptions of the type requested to the Secretary of Labor. Therefore, these notices of proposed exemption are issued solely by the Department.

The applications contain representations with regard to the proposed exemptions which are summarized below. Interested persons are referred to the applications on file with the Department for a complete statement of the facts and representations.

Fortis, Inc. Employees' Uniform Profit Sharing Plan (the Fortis Plan) Located in New York, New York

[Application Number D–10789]

Proposed Exemption

The Department is considering granting an exemption under the authority of section 408(a) of the Act and section 4975 (c)(2) of the Code and in accordance with the procedures set forth in 29 CFR Part 2570, Subpart B (55 FR 32826, 32847, August 10, 1990). If the exemption is granted, the restrictions of sections 406(a), 406(b)(1) and (2) of the Act and the sanctions resulting from the application of section 4975 of the Code, by reason of section 4975(c)(1)(A) through (E) of the Code, shall not apply to: (1) The restoration payment (the Restoration Payment) by Fortis, a party in interest with respect to the Fortis Plan to the Fortis Plan with respect to a certain counterfeit certificate of deposit (the Plan CD); and (2) the potential future payment to Fortis of recapture payments (the Recapture Payments) made to the Fortis Plan pursuant to proceedings involving the issuer of the counterfeit CD.

This exemption is subject to the following conditions:

(A) The Restoration Payment consists of:

(i) $501,125, an amount equal to the Plan CD's full face value at the time of the Plan CD's maturity; and

(ii) An amount in cash which is equal to:

(a) A 5.5% annual rate of return on the Plan CD's maturity value of $501,125 for the period beginning October 30, 1997 and ending on December 31, 1998; and

(b) A rate of return on the amount described in (A)(ii)(a) above which is equal to the average annual rate of return of the Fortis Money Market Fund from January 1, 1999 until the date of

the Restoration Payment (*i.e.,* the Interest Payment);

(B) The Restoration Payment is a one-time transaction for cash;

(C) The Fortis Plan pays no expenses with respect to the Restoration Payment;

(D) The Fortis Plan retains any amount in excess of the Restoration Payment that it collects in its attempts to recover monies due under the Plan CD; and

(E) Any Recapture Payments paid by the Fortis Plan to Fortis are limited to the amount of the Restoration Payment and are restricted solely to the amounts, if any recovered, by the Fortis Plan with respect to the counterfeit CD in litigation or otherwise.

Summary of Facts and Representations

1. Fortis, a diversified financial services company providing insurance and investment products, is a Nevada corporation, with its principal office located in New York, New York. Fortis is the sponsor of the Plan which is a profit sharing plan having approximately 12,000 participants and approximately $366 million in assets as of May 11, 1999.

2. Interfinancial, Inc. (Interfinancial), a Georgia Corporation whose function is merely to hold the stock of subsidiary operating companies, is a subsidiary of Fortis. On August 31, 1998, Interfinancial acquired the John Alden Life Insurance Company (John Alden), the sponsor of the John Alden Employee Savings Incentive Plan (the Alden Plan), a defined contribution plan.

Under the Alden Plan, participants could direct the investment of their accounts among various investment options selected by the John Alden Asset Management Company (JAAMCO), a subisidiary of John Alden.

JAAMCO managed the investment of the Alden Plan assets. According to the Alden Plan's ''Policy and Procedures,'' the Money Market Fund was to consist of money market instruments such as bank certificates of deposits, commercial paper, and bonds. Portfolio managers were permitted to purchase CDs issued by pre-approved entities, which included Deutsche Bank.

The Plan CD was a certificate of deposit offered to the Alden Plan by Charles Bradley McCoskey, a securities broker with Tri-Star Financial, a securities firm located in Houston, Texas. The Plan CD was represented as an obligation of the Deutsche Bank Argentina, S.A. to ''Robert W. Hallock/Himmel & Grund LLC.'' Annexed to the Plan CD was an ''Irrevocable Stock/Bond Power bearing the signature of ''Robert W. Hallock/Himmel & Grund LLC.'' The Plan CD had a 5.5% coupon and a maturity date of October 30, 1997. JAAMCO purchased, on behalf of the John Alden Money Market Fund, the Plan CD on January 10, 1997 for $475,403.75 and anticipated the receipt of $501,125 on October 30, 1997, the Plan CD's maturity date. At the time of the purchase, the Plan CD comprised approximately 0.61% percent of the Alden Plan's assets.

3. On May 5, 1997, the Securities Exchange Commission (SEC) issued a subpoena which demanded the production of the Plan CD. Subsequently, the SEC informed the Alden Plan that the Plan CD was counterfeit. The applicant represents that John Alden, on behalf of the Alden Plan, conducted an investigation and retained counsel to recoup the value of the Plan CD from the culpable parties. The applicant further represents that John Alden subsequently obtained a settlement judgment (the Settlement Judgment) against Robert W. Hallock for the recovery of monies due the Alden Plan under the Plan CD. The applicant represents that, despite the Settlement Judgment, the Alden Plan did not recover any of the monies due the Alden Plan under the Plan CD.

The Alden Plan and the Fortis Plan merged on December 31, 1998. As a result, the Plan CD was transferred from the Alden Plan to the Fortis Plan and the portion of each Alden Plan participant's account allocated to the Plan CD was frozen. The applicant represents that Fortis, on behalf of the Fortis Plan, endeavored to recover the monies due the Fortis Plan. In this regard, the applicant represents that currently the Fortis Plan has not been successful in recovering any of the monies due the Fortis Plan as a result of the Fortis Plan's ownership of the Plan CD. The applicant represents, however, that in the event that the Fortis Plan recovers monies on the Plan CD which are in excess of the Plan CD's maturity value, the Fortis Plan will retain that excess amount. Accordingly, Fortis and the Fortis Plan have signed an agreement to this effect.

4. The applicant proposes the Restoration Payment by Fortis to the Fortis Plan with respect to the Plan CD. The applicant proposes that the Restoration Payment include both a payment of the Plan CD's maturity value (the Maturity Value Payment) and a payment of interest (the Interest Payment). In this regard, the applicant states that the Plan CD had a face value of $501,125 as of its October 30, 1997 maturity date. As a result, the applicant proposes that the Maturity Value Payment equal $501,125.

The applicant proposes that the Interest Payment consist of two components. First, the Interest Payment equals a 5.5% annual rate of return on the maturity value amount for the period beginning October 30, 1997 and ending on December 31, 1998. [1]

Thereafter, from January 1, 1999 until the date of the Restoration Payment, the Interest Payment will equal the rate of return on the Fortis Money Market Fund.[2]

5. In addition, the Recapture Payment shall consist of any monies recovered due on the Plan CD up to the Restoration Payment amount, of which the Fortis Plan will be required to refund these monies to Fortis. Specifically, the Recapture Payment would include any amount recovered up to the $501,125 plus the Interest Payment.

6. The applicant represents that, in connection with Fortis' acquisition of John Alden, Fortis has discontinued John Alden's asset management operations. The applicant further notes that the portfolio manager responsible for the purchase of the Plan CD, his supervisor, and most John Alden employees, who might have knowledge about the Plan CD purchase, are no longer employed by any Fortis company.

7. The applicant represents that the proposed transaction is feasible since it involves a one-time transaction for cash. Furthermore, the applicant represents that the proposed transaction is protective of the rights of participants and beneficiaries since the Restoration Payment would ensure that the Fortis Plan recovers the Plan CD's full maturity value despite the uncertainty of any recovery from the Settlement Judgment. Finally, the applicant represents that the proposed transaction is in the best interests of the Plan and its participants and beneficiaries since the Interest Payment enables the Fortis Plan to receive a rate of return on the Plan CD which is comparable to that which it would have received if the Plan CD had not been a counterfeit and the rate of return the money market funds (John Alden, 5.5% and the average annual return on Fortis) earned during the applicable time frames.

[1] The applicant represents that the 5.5% annual rate is derived from the following: (1) The average rate of return on the John Alden Money Market Fund for 1998 was 5.483%; and (2) the average rate of return on the short-term funds within the John Alden Money Market Fund for 1998 was 5.46%.

[2] In this regard, the applicant states that when the Alden Plan merged into the Fortis Plan as of the end of December 31, 1998, the John Alden Money Market Fund (other than the Plan CD) was liquidated. Accordingly, the money market fund under the Fortis Plan became available.

8. The applicant represents that once the proposed transaction is consummated, the cash proceeds from the transaction will be allocated to the accounts of the affected participants, in accordance with their direction. The applicant further represents that the proposed transaction does not violate the requirements set forth in section 415 of the Code.

9. In summary, the applicant represents that the proposed transaction satisfies the statutory criteria for an exemption under section 408(a) and section 4975(c)(2) of the Code because:

(A) The Restoration Payment consists of:

(i) $501,125, an amount equal to the Plan CD's full face value at the time of the Plan CD's maturity; and

(ii) An amount in cash which is equal to:

(a) A 5.5% annual rate of return on the Plan CD's maturity value of $501,125 for the period beginning October 30, 1997 an ending on December 31, 1998; and

(b) A rate of return on the amount described in (A)(ii)(a) above which is equal to the average annual rate of return of the Fortis Money Market Fund from January 1, 1999 until the date of the Restoration Payment (*i.e.,* the Interest Payment);

(B) The Restoration Payment is a one-time transaction for cash;

(C) The Fortis Plan pays no expenses with respect to the Restoration Payment;

(D) The Fortis Plan retains any amount in excess of the Restoration Payment that it collects in its attempts to recover monies due under the Plan CD; and

(E) Any Recapture Payments paid by the Fortis Plan to Fortis are limited to the amount of the Restoration Payment and are restricted solely to the amounts, if any recovered, by the Fortis Plan with respect to the counterfeit CD in litigation or otherwise.

FOR FURTHER INFORMATION CONTACT: Mr. J. Martin Jara, telephone (202) 219–8881. (This is not a toll-free number).

Canada Life Assurance Company (Canada Life) Located in Toronto, Ontario, Canada

[Application No. D–10790]

Proposed Exemption

Based on the facts and representations set forth in the application, the Department is considering granting an exemption under the authority of section 408(a) of the Act and in accordance with the procedures set forth in 29 CFR Part 2570, Subpart B (55 FR 32836, 32847, August 10, 1990).[3]

Section I. Covered Transactions

If the exemption is granted, the restrictions of section 406(a) of the Act and the sanctions resulting from the application of section 4975 of the Code, by reason of section 4975(c)(1)(A) through (D) of the Code, shall not apply, effective November 4, 1999, to the (1) receipt of common shares (the Common Shares) of Canada Life Financial Corporation, the holding company for Canada Life (the Holding Company), or (2) the receipt of cash (the Cash) or policy credits (the Policy Credits), by or on behalf of any eligible policyholder (the Eligible Policyholder) of Canada Life which is an employee benefit plan (the Plan), subject to applicable provisions of the Act and/or the Code, other than a Plan established by Canada Life or an affiliate for its own employees (the Canada Life Plan), in exchange for such Eligible Policyholder's membership interest in Canada Life, in accordance with the terms of a conversion proposal (the Conversion Proposal) adopted by Canada Life and implemented under the insurance laws of Canada and the State of Michigan.

This proposed exemption is subject to the conditions set forth below in Section II.

Section II. General Conditions

(a) The Conversion Proposal was implemented in accordance with procedural and substantive safeguards that were imposed under the insurance laws of Canada and the State of Michigan and was subject to review and/or approval in Canada by the Office of the Superintendent of Financial Institutions (OSFI) and the Minister of Finance (the Canadian Minister of Finance) and, in the State of Michigan, by the Commissioner of Insurance (the Michigan Insurance Commissioner).

(b) OSFI, the Canadian Finance Minister and the Michigan Insurance Commissioner reviewed the terms of the options that were provided to Eligible Policyholders of Canada Life as part of their separate reviews of the Conversion Proposal. In this regard, (1) OFSI (i) authorized the release of the Conversion Proposal and all information to be sent to Eligible Policyholders; (ii) oversaw each step of the conversion process (the Conversion); and (iii) made a final recommendation to the Canadian Finance Minister on the Conversion Proposal.

(2) The Canadian Finance Minister, in his sole discretion, could consider such factors as (i) whether the Conversion Proposal was fair and equitable to Eligible Policyholders; (ii) whether the Conversion Proposal was in the best interests of the financial system in Canada; and (iii) if sufficient steps had been taken to inform Eligible Policyholders of the Conversion Proposal and of the special meeting on Conversion.

(3) The Michigan Insurance Commissioner made a determination that the Conversion Proposal was (i) fair and equitable to all Eligible Policyholders and (ii) consistent with the requirements of Michigan law.

(4) Both the Canadian Finance Minister and the Michigan Insurance Commissioner concurred on the terms of the Conversion Proposal.

(c) Each Eligible Policyholder had an opportunity to vote to approve the Conversion Proposal after full written disclosure was given to the Eligible Policyholder by Canada Life.

(d) One or more independent fiduciaries of a Plan that was an Eligible Policyholder received Common Shares, Cash or Policy Credits pursuant to the terms of the Conversion Proposal and neither Canada Life nor any of its affiliates exercised any discretion or provided ''investment advice,'' as that term is defined in 29 CFR 2510.3–21(c), with respect to such acquisition.

(e) After each Eligible Policyholder was allocated 100 Common Shares, additional consideration was allocated to such Eligible Policyholder who owned an eligible policy based on an actuarial formula that took into account such factors as the total cash value, the basic annual premium and the duration of such eligible policy. The actuarial formula was reviewed by the Canadian Finance Minister and the Michigan Insurance Commissioner.

(f) All Eligible Policyholders that were Plans participated in the transactions on the same basis within their class groupings as other Eligible Policyholders that were not Plans.

(g) No Eligible Policyholder paid or will pay any brokerage commissions or fees to Canada Life or its affiliates in connection with their receipt of Common Shares, in connection with the implementation of the secondary offering (the Share Sale Service) or the assisted sales program (the Assisted Sales Program).

(h) All of Canada Life's policyholder obligations will remain in force and will not be affected by the Conversion Proposal.

[3] For purposes of this proposed exemption, reference to provisions of Title I of the Act, unless otherwise specified refer also to the corresponding provisions of the Code.

Section III. Definitions

For purposes of this proposed exemption:

(a) The term ''Canada Life'' means The Canada Life Assurance Company and any affiliate of Canada Life as defined in paragraph (b) of this Section III.

(b) An ''affiliate'' of Canada Life includes —

(1) Any person directly or indirectly through one or more intermediaries, controlling, controlled by, or under common control with Canada Life; (For purposes of this paragraph, the term ''control'' means the power to exercise a controlling influence over the management or policies of a person other than an individual.) or

(2) Any officer, director or partner in such person.

(c) The term ''Eligible Policyholder'' means a policyholder who—

(i) Was the owner of a voting policy at any time on April 2, 1998 (the Eligibility Day);

(ii) Became the owner of a voting policy, if the voting policy was applied for by that person before the Eligibility Day, and the application was received by Canada Life on or before the close of business on June 30, 1998; or

(iii) Was the owner of a voting policy that lapsed before June 2, 1998 and, where the policy terms provided that, as of June 2, 1998, the owner was entitled to request that the policy be reinstated, the policy was reinstated by the person who was the owner at the time the policy lapsed in accordance with its terms (without regard to when the right to reinstate expired) during the period which began on April 2, 1998 and ended 90 days before the special meeting.

(d) The term ''Policy Credit'' means —

(1) For an individual life insurance policy with respect to which dividends may be paid, dividend deposits when the dividend deposit option has been selected under the policy and, in all other cases, dividend additions;

(2) For in individual life insurance policy other than a policy with respect to which dividends may be paid, an increase in the fund value (to which no sales or surrender or similar charges will be applied);

(3) For an individual deferred annuity policy with respect to which dividends may be paid, dividend additions;

(4) For an individual deferred annuity policy other than a policy with respect to which dividends may be paid, an increase in accumulation value (to which no sales or surrender or similar charges will be applied); and

(5) For a supplementary contract, settlement option or annuity in annuitization status, an increase in the periodic annuity payment amount. If the periodic annuity payment is on a life basis, the increase will be on a life annuity with cash refund basis.

EFFECTIVE DATE: If granted, this proposed exemption will be effective as of November 4, 1999.

Summary of Facts and Representations

1. Canada Life, Canada's oldest domestic life insurer, was established in 1847 and incorporated in 1849 by a Special Act of the Canadian Parliament. In 1962, Canada Life became a mutual life insurance company and it remained that way until November 4, 1999, which is the effective date (the Effective Date) of the Conversion transaction described herein. Canada Life is currently headquartered at 330 University Avenue, Toronto, Ontario, Canada. It is subject to the Insurance Companies Act of Canada (ICA) as well as the regulatory authority of OSFI. Currently, Canada Life is rated by national ratings firms as follows: Duff & Phelps, AA+; Moody's Investors Service, Aa3; Standard & Poor's, AA; and A.M. Best Company, AA+. During 1998, Canada Life had total assets under administration of $47.4 billion and $2.7 billion in policyholders' equity.

Although Canada Life's principal place of business in the United States is 6201 Powers Ferry Road, N.W., Atlanta, Georgia, it uses the State of Michigan as its port of entry for its operations in the United States. Therefore, Canada Life is also subject to the insurance laws of the State of Michigan and to regulation within the United States, by the Michigan Department of Insurance (the Michigan Insurance Bureau).

2. Canada Life carries on its insurance business in Canada and internationally through branch operations in the United States, the United Kingdom and Ireland. In addition, Canada Life serves over 8 million people under individual and group contracts in these areas. Moreover, Canada Life provides life insurance, health insurance, property and automobile insurance, investment management and related services through various subsidiaries located in Canada and worldwide. The insurance business that Canada Life carries on directly in Canada and through its international branch operations includes the sale of individual and group life, disability, health and dental insurance, annuities and pension products.

3. As a mutual life insurance company, Canada Life had no issued or outstanding capital stock. Instead, Canada Life's ''products'' included policies entitling holders to participate in its profits (the Participating Policies) as well as other policies that did not generally so entitle the holders (the Non-Participating Policies). Aside from the contractual right to receive policy benefits (*i.e.,* payment under the terms of the policy), the holders of Participating Policies (the Participating Policyholders) possessed certain other rights with respect to, and interests in, Canada Life as a mutual company, including the right to vote at Canada Life meetings.[4] In addition, Participating Policyholders had the right to receive bonuses or policyholder dividends when declared by Canada Life's Board of Directors and an inchoate right to participate in Conversion benefits (the Conversion Benefits). Further, if Canada Life was liquidated, the Participating Policyholders would be entitled to share in the insurer's residual assets after all claims assessed against the insurer had been satisfied in full.

4. Canada Life's Participating Policies included, without limitation, policies that qualified for tax-favored status in the United States, such as policies issued as tax-deferred annuities under section 403(b) of the Code and individual retirement annuities under section 408(b) of the Code. In addition, the Participating Policies covered, without limitation, certain tax-exempt entities in the United States such as tax-qualified retirement plans within the meaning of section 401(a) of the Code. Participating Policyholders included individuals, corporations, trusts and other persons who were residents for tax purposes in Canada, the United States, the United Kingdom, Ireland and elsewhere.

The Decision To Demutualize

5. On April 2, 1998, Canada Life issued a press release stating that its Board of Directors had requested the insurer's management to develop a plan to convert Canada Life from a mutual life insurance company to a publicly-traded stock company, whose Common Shares are listed on the Toronto Stock Exchange and the Montreal Stock Exchange, through a process known as ''demutualization.'' Canada Life believed that as a result of the flexibility offered by the stock company structure and the access to capital markets, it would be in a position to enhance its market leadership, financial strength and strategic position. Moreover, the

[4] Voting rights included the right to vote on such matters as the review and approval of Canada Life's annual financial statements, the election of directors, the appointment of Canada Life's auditors and the approval of certain fundamental changes, including the Conversion.

insurer could aggressively pursue opportunities for growth, thereby providing greater protection to policyholders.

In November 1998, a bill was introduced in the Canadian Parliament to amend the ICA to set forth the statutory rules allowing the demutualization of Canadian mutual life insurance companies with assets in Canada of CDN $7.5 billion or more. When the bill was introduced, the Canadian Department of Finance reported that each of Canada's four large mutual life insurance companies had already announced its intention to develop demutualization plans in order to improve the efficiency and competitiveness of their companies through increased flexibility to access capital, to gain greater market scrutiny and to achieve a better understood corporate structure. Therefore, on March 13, 1999, the Canadian Government enacted the ICA amendments permitting the demutualization of large Canadian mutual life insurance companies. The Canadian Department of Finance subsequently released ''Mutual Company (Life Insurance) Conversion Regulations'' (the Conversion Regulations) which became effective on March 12, 1999 and implemented the new legislation.

On November 4, 1999, Canada Life demutualized. As a result of the Conversion, Canada Life became a stock insurer and a subsidiary of Canada Life Financial Corporation, a newly-formed holding company. The reorganization provided economic value to Eligible Policyholders in the form of shares of stock of the Holding Company (*i.e.,* the Common Shares), Cash or Policy Credits, in exchange for their respective ownership rights (the Ownership Rights) in Canada Life.

6. Therefore, Canada Life requests an administrative exemption from the Department that would cover the receipt of Common Shares, Policy Credits or Cash by Eligible Policyholders which are trusteed and non-trusteed Plans, other than Canada Life Plans,[5] in exchange for their mutual membership interests in Canada Life. If granted, the proposed exemption would be effective as of November 4, 1999, the Effective Date of the Conversion.

Canada Life represents that it is not a party in interest with respect to a Plan policyholder merely because it has issued an insurance policy to such Plan. However, Canada Life represents that both it and its affiliates have provided a variety of fiduciary and other services to Plans which are also Canada Life policyholders. Canada Life further represents that the provision of such services to Plan policyholders causes it to be a party in interest with respect to such Plans under section 3(14)(A) and (B) of the Act or the related ''derivative'' provisions of this section.

The proposed exemption includes a requirement that all Eligible Policyholders that were Plans participated in the transactions on the same basis within their class groupings as other Eligible Policyholders that were not Plans. Thus, Canada Life did not treat Plan policyholders any differently from non-Plan policyholders within their respective class groupings.

Regulatory Supervision

7. The various steps of the Conversion were subject to the approval of Canada Life's Board of Directors, the OSFI, the Canadian Finance Minister, the Michigan Insurance Commissioner, and other regulatory authorities in the United Kingdom and Ireland. In pertinent part, the Conversion Regulations required that the conversion of a mutual life insurance company be implemented in accordance with a detailed proposal that sets forth the terms and means of effecting the demutualization. In accordance with this requirement, on July 8, 1999, Canada Life's Board of Directors formally adopted the Conversion Proposal which permitted Canada Life to demutualize and convert into a stock life insurance company pursuant to section 237 *et seq.* of the ICA, the Conversion Regulations and the terms of such Proposal.

Also, on July 8, 1999, Canada Life provided to OSFI, which had oversight responsibility for the entire demutualization process, a draft of the Conversion Proposal for review. OSFI reviewed and commented on the Conversion Proposal and, on July 16, 1999, authorized the Board to vote on the Conversion Proposal and to send Eligible Policyholders notice of a special meeting to consider such Proposal.

On September 16, 1999, the special meeting of Eligible Policyholders was held in Toronto, Ontario, Canada. Approximately 388,000 Eligible Policyholders were entitled to vote on the Conversion Proposal. Of this total, approximately 40,000 Eligible Policyholders resided in the United States and less than one percent of the Eligible Policyholders were Plans. When the vote was tallied, more than 99.1 percent of the Eligible Policyholders who voted on the Conversion Proposal voted to approve such Proposal.[6] Following the special meeting, the Directors of Canada Life applied to the Canadian Finance Minister for approval of the Conversion Proposal and issuance of Letters Patent to effect the Conversion.

Canadian law did not require that the Canadian Finance Minister make any particular findings in deciding whether to approve the Conversion Proposal. Therefore, approval was entirely within the discretion of such Minister. However, the Canadian Finance Minister, in deciding to approve the Conversion Proposal, could consider such factors as (a) whether the Conversion Proposal was fair and equitable to policyholders; (b) whether the Conversion Proposal was in the best interest of the financial system in Canada; and (c) whether sufficient steps had been taken to inform policyholders of the Conversion Proposal and of the special meeting on the Conversion.

8. Because Canada Life operates in the United States through its U.S. branch under the Michigan State of Entry Statute, the laws of Michigan regarding demutualization (the Michigan Demutualization Law) were also applicable to Canada Life's demutualization. The requirements of Michigan Demutualization Law are similar to those of the ICA and the Conversion Regulations. Among other things, the Statute provides that the Conversion Proposal be submitted to the Michigan Insurance Commissioner prior to a vote by Canada's Eligible Policyholders. In addition, the Michigan Demutualization Law states that the Conversion Proposal cannot become effective without the approval of the Michigan Insurance Commissioner following a public hearing and it cannot be amended without the prior approval of such Commissioner.

The Michigan Insurance Commissioner was authorized to retain, and did retain, independent legal and actuarial advisers to assist in reviewing the Conversion Proposal. Under the Michigan Demutualization Law, the Michigan Insurance Commissioner could approve or disapprove the Conversion Proposal within 90 days after its submission, and could not approve it unless he found the Conversion Proposal did not prejudice the interests of its members, was fair and equitable, and was not inconsistent with the purpose and intent of the Michigan Demutualization Law. If

[5] Canada Life determined that the Canada Life Plans were not Eligible Policyholders. Therefore, these Plans did not receive any consideration as a result of Canada Life's Conversion.

[6] Under the ICA, the Conversion Proposal must be approved by the Eligible Policyholders, each of whom is entitled to one vote irrespective of the number or size of Policies held.

approved, the Conversion would take effect as of the Effective Date specified in the Conversion Proposal.

In accordance with Michigan law, on or about July 26, 1999, Canada Life mailed notice of the public hearing to all U.S. resident Eligible Policyholders. The Michigan Insurance Bureau also published notice of the hearing in the Wall Street Journal on August 5, 1999 as well as in three newspapers that are published in different areas of the State of Michigan on August 7, 1999. Then, on August 23, 1999, the Michigan Insurance Bureau conducted a public hearing with respect to the Conversion Proposal. Finally, on September 3, 1999, the Michigan Insurance Commissioner approved the Conversion Proposal.

The Transaction

9. As noted above, the Conversion Proposal provided for Canada Life to demutualize and convert to a stock life insurance company under section 237 *et seq.* of the ICA, the Conversion Regulations and the terms of the Conversion Proposal. To this end, in advance of the Conversion, Canada Life incorporated the Holding Company in Canada under the ICA as a new stock holding company. Thus, in accordance with section 5.03 of the Conversion Proposal, the following transactions, among others, occurred on November 4, 1999, the Effective Date of the Conversion:

- *Change in Business Structure.* Canada Life ceased to be a mutual life insurance company and became a life insurance company with Common Shares under the ICA. The policyholders of Canada Life ceased to have any rights with respect to or any interest in Canada Life as a mutual life insurance company and the Eligible Policyholders were entitled to receive Conversion Benefits.
- *Issuance of Common Shares to the Holding Company.* Canada Life issued 160 million Common Shares to the Holding Company.
- *Issuance of Consideration to Eligible Policyholders.* The Holding Company issued Common Shares to Eligible Policyholders and made Cash payments to other Eligible Policyholders. In addition, Canada Life issued Policy Credits to Eligible Policyholders in accordance with the allocation and distribution rules set forth in the Conversion Proposal.
- *Sale and Cancellation of Common Share and Preferred Share (the Preferred Share) by the Holding Company.* At the time the Holding Company was initially capitalized, it issued one Preferred Share and one Common Share to Canada Life in exchange for CDN$10 million and CDN$1, respectively. However at the time of the Conversion, the amount of capital was repaid to Canada Life by the Holding Company and the Preferred Share and the Common Share were canceled. Under Canada law, Canada Life was required to capitalize the Holding Company with at least CDN$10 million. Therefore, Canada Life received the Preferred Share in exchange for the CDN$10 million capital contribution to help ensure that the repayment of the capital to Canada Life at the time of the demutualization would not be a taxable event in Canada.

10. Following the Conversion, all policies generally remained in force as policies of Canada Life, and all policy premiums, benefits, values, guarantees, or other policy obligations remained unchanged, except that policies credited with Policy Credits were enhanced by such Credits. Dividends would continue to be declared with respect to the Participating Policies at the discretion of Canada Life's Board of Directors. Accordingly, the Conversion would not adversely affect the contractual rights of any Participating Policyholder whose former ownership rights in the mutual insurer were extinguished.

11. Most Eligible Policyholders, including Eligible Policyholders that were Plans covered under the provisions of the Act, initially received Conversion Benefits in the form of Common Shares issued by the Holding Company.[7] Fewer than 10 percent of the Eligible Policyholders received Conversion Benefits in the form of Cash or Policy Credits.

Section 8.02(a) of the Conversion Proposal provides that Eligible Policyholders which are not residents of the United States, the United Kingdom, Canada or Ireland, as well as governments or agents thereof, would be entitled to receive Cash distributions from Canada Life as a result of its Conversion. In addition, under section 8.02(b) of the Conversion Proposal, certain individuals which are Eligible Policyholders in the United States with certain tax-qualified retirement contracts would be credited with Policy Credits. Specifically, Policy Credits would be posted to each Eligible Policyholder in the United States whose Participating Policy was—

- An individual retirement annuity policy within the meaning of section 408(b) of the Code or a tax sheltered annuity policy within the meaning of section 403(b) of the Code;
- An individual retirement annuity policy that had been issued directly to the Plan participant pursuant to a plan qualified under section 401(a) of the Code or pursuant to a Plan described in section 403(a) of the Code;
- An individual life insurance policy that had been issued directly to the plan qualified under section 401(a) of the Code; or

Also, included within the category entitled to receive Policy Credits were custodial accounts under section 403(b)(7) of the Code and retirement accounts under section 403(b)(9) of the Code.

Further, Policy Credits were posted to each Eligible Policyholder with respect to whom Canada Life's Board of Directors determined that the receipt of Conversion Benefits in the form of Cash or Common Shares would be disadvantageous for such Eligible Policyholder, provided that such Eligible Policyholder received notification of such determination. Eligible Policyholders holding certain tax-qualified retirement contracts ending after April 2, 1998 and before the Conversion, received Common Shares and could elect to sell those shares in the IPO.[8]

12. The aggregate amount of Conversion Benefits provided to Eligible Policyholders in the Conversion and the allocation of such Benefits among Eligible Policyholders was determined by an actuary employed by Canada Life. The total amount of Conversion Benefits received by each Eligible Policyholder varied and took into account such factors as the basic annual premium, the duration and the total cash value of the relevant Participating Policy, but included a fixed component equal to the value of 100 Common Shares.

Pursuant to the ICA, the Conversion Proposal was accompanied by an

[7] However, as noted herein, Eligible Policyholders residing outside Canada could elect to sell their Common Shares in an initial public offering (the IPO) under the Share Sale Service Program which was offered contemporaneously with the Conversion.

[8] Consistent with sections 1 and 4(1)(e)(i) of the Conversion Regulations, the Conversion Proposal generally provides that the policyholder eligible to participate in the distribution of Common Shares, Cash or Policy Credits resulting from the Conversion Proposal is the ''owner'' of any policy shall generally be determined on the basis of the records of Canada Life. Canada Life further represents that an insurance or annuity policy that provides benefits under an employee benefit plan, typically designates the employer that sponsors the plan, or a trustee acting on behalf of the plan, as the owner of the policy. In regard to insurance or annuity policies that designate the employer or trustee as owner of the policy, Canada Life represents that it was required under the foregoing provisions of Canadian Law and the Conversion Proposal to make distributions resulting from such Plan to the employer or trustee as owner of the policy.

In general, it is the Department's view that, if an insurance policy (including an annuity contract) is purchased with assets of an employee benefit plan, including participant contributions, and if there exist any participants covered under the plan (as defined at 29 CFR 2510.3–3) at the time when Canada Life incurred the obligation to distribute Common Shares, Cash or Policy Credits, then such consideration would constitute an asset of such plan. Under these circumstances, the appropriate plan fiduciaries must take all necessary steps to safeguard the assets of the plan in order to avoid engaging in a violation of the fiduciary responsibility provisions of the Act.

opinion prepared by the actuary for Canada Life and an opinion prepared by an independent actuary to the effect that the allocation of benefits to Eligible Policyholders in the Conversion was fair and equitable to Eligible Policyholders. The Common Shares, Cash or Policy Credits distributed in the Conversion had a fair market value equal to the fair market value of the Ownership Rights that ceased in connection with the Conversion.

13. Approximately 57 percent of Canada Life's Eligible Policyholders were Canadian residents, 9 percent were United States residents, 20 percent were residents of the United Kingdom and 14 percent were residents of Ireland. While United States residents constituted roughly 9 percent of the total number of Eligible Policyholders, Canada Life projected that United States citizens would receive roughly 18 percent of the total Common Shares and other Conversion Benefits that were distributed by Canada Life.[9]

14. In connection with the Conversion, the Holding Company held an IPO of Common Shares to Canadian investors and a private placement of Common Shares to large institutional investors located in the United States and elsewhere. The Common Shares were offered at an initial share price of CDN$17.50 per share.

The private placement involved the sale by certain underwriters (the Underwriters), which were unrelated to Canada Life and its affiliates, to the investors (the Investors) of Common Shares the Underwriters had purchased previously from Eligible Policyholders who resided outside of Canada and who had elected to sell their Common Shares for Cash. Such purchases occurred at the initial share price of CDN$17.50 per share. In addition, the private placement involved the sale by the Underwriters to the Investors of newly-issued Common Shares (the Primary Shares) the Underwriters had purchased from the Holding Company in a primary offering (the Primary Offering).

The proceeds of the IPO were (a) initially paid to Eligible Policyholders who were eligible to receive a cash payment pursuant to section 8.03(b) of the Conversion Proposal and contributed by the Holding Company to Canada Life in an amount sufficient to enable Canada Life to credit Policy Credits; (b) then retained by the Holding Company in an amount sufficient to recoup the costs incurred by the Holding Company in purchasing Common Shares from Canadian Eligible Policyholders who elected to sell their Common Shares; and (c) finally retained by the Holding Company or contributed by the Holding Company to Canada Life to help defray the costs of conversion or to provide additional working capital.

The Primary Offering enabled the Holding Company to ensure that a proper market and price for the trading of Common Shares would develop and create an active trading profile for those shares. As soon as practicable after the IPO, the Holding Company paid cash and Canada Life posted Policy Credits to Eligible Policyholders who were entitled to receive Cash or Policy Credits in accordance with the Conversion Proposal.

15. As stated in Representation 14, Eligible Policyholders residing outside Canada who were issued Common Shares in the Conversion could elect, prior to the demutualization, to sell all of their Common Shares for cash to the Underwriters immediately upon issuance through the Share Sale Service which was established by Canada Life and run concurrently with the IPO.[10] The Share Sale Service ended shortly after the closing date of the demutualization and the IPO. Such Eligible Policyholders were referred to as ''Electing Policyholders,'' and the Common Shares they elected to sell were referred to as ''Electing Shares.'' Electing Policyholders residing outside Canada had their Electing Shares (the Resale Shares) sold for cash to the Underwriters who, in turn, sold them to the Investors through the IPO procedure described above. The Holding Company paid all of the Underwriters' fees associated with the Underwriters' purchase of the Common Shares from Eligible Policyholders through the Share Sales Service Program or the sale of such Common Shares to the Investors in the Primary Offering.[11]

16. As noted above, the Common Shares that were sold in the IPO consisted of both the Resale Shares and the Primary Shares. For this purpose, the Holding Company determined the maximum number of Common Shares to be sold to the Underwriters and in the IPO (the IPO Shares). In the event that the number of Electing Shares exceeded the number of IPO shares, the shares of Electing Policyholders were to be repurchased by the Holding Company (in the case of Canadian Electing Policyholders) and sold to Underwriters (in the case of non-Canadian Electing Policyholders) in ascending order, from those Common Shares held by Electing Policyholders holding the smallest number of Common Shares to those holding the greatest number of Common Shares until the total number of IPO Shares is reached. Any Electing Shares not sold in connection with the Conversion and IPO were retained by the Electing Policyholders and confirmation of Common Share ownership was sent to those Electing Policyholders.

17. Canada Life represents that in addition to the Share Sale Service, it currently is offering the Assisted Sales Program to Eligible Policyholders who received Common Shares in the demutualization and who do not have pre-existing brokerage accounts to which such Common Shares can be transferred. The Assisted Sales Program commenced on December 6, 1999 for Canadian Eligible Policyholders and was implemented in the United States on January 4, 2000 for United States Eligible Policyholders. Canada Life anticipates that the Assisted Sales Program will continue for up to two years from the Effective Date although it may be discontinued at any time.

The Assisted Sales Program is designed to provide an Eligible Policyholder, who has received Common Shares in book entry or certificated form, an opportunity to sell such Common Shares after the demutualization so that the policyholder will not have to find a stock broker. Under the Assisted Sales Program, sales will take place in Canada through Montreal Trust Company of Canada (Montreal Trust), the Holding Company's transfer agent, and in the United States, through EquiServe Trust Company, N.A. of Jersey City, New Jersey (Equi-Serve Trust), an agent of Montreal Trust. Both Montreal Trust and Equi-Serve Trust are not related to Canada Life or its affiliates.

For United States Eligible Policyholders, Equi-Serve Trust will collect all required shareholder request forms and provide the information to Montreal Trust on a daily basis. A bulk order will be placed each day by a

[9] The differences between the relative numbers of Eligible Policyholders residing in each country and the estimated percentages of total Conversion Benefits to be distributed to Eligible Policyholders who resided in each covered country were attributed by Canada Life to the fact that Conversion Benefits were allocated in part based on such factors as the type, duration, face amount and cash surrender value of an eligible policy, and not simply on a per capita basis.

[10] Conversely, Canadian Eligible Policyholders electing to receive cash could sell their Common Shares to the Holding Company.

[11] Canada Life concluded that no portion of the fees it paid to the Underwriters should be treated for Canadian tax purposes as a dividend to policyholders who elected to sell their Common Shares in the IPO. As a result, Canada Life did not believe there would be any Canadian withholding tax due in connection with its payment of the Underwriter fees. Canada Life also represented that it would not seek reimbursement from U.S. Eligible Policyholders for any Canadian withholding tax that ultimately might be imposed with respect to its payment of the Underwriter fees.

Canadian broker, as per Montreal Trust's instructions, to sell the Common Shares on The Toronto Stock Exchange. The Common Shares will be sold at the average price paid for such shares on the date of the sale.[12] Although the United States Eligible Policyholder will be required to pay a one-time administration fee of $25 to Equi-Serve Trust, such Eligible Policyholder will not be charged any brokerage commissions or other fees.

18. Under the ICA, Canada Life is required to maintain two separate accounts—a Participating Policyholder Account and a Shareholder Account. The Participating Policyholder Account must have sufficient capital to provide reasonable assurance that the contractual obligations and the reasonable expectations of the Participating Policyholders will be satisfied and to provide capital for ongoing sales of Participating Policies. The Shareholder Account entitles Canada Life's shareholders to receive dividends. The ICA also limits the transfer of funds to the Shareholder Account from the Participating Policyholder Account.

For individual Participating Policies that pay experience-based policy dividends, Canada Life has established a Closed Block, as defined in the Conversion Proposal, for the purpose of giving reasonable assurances to the holders of such Participating Policies that, after the Effective Date, assets will be available to meet contractual obligations with respect to such Participating Policies and to meet the reasonable expectations of the holders of such Participating Policies regarding future dividends, as experience justifies. The establishment of the Closed Block will not alter, diminish, reduce or in any way modify or amend the terms or provisions of the Participating Policies included therein.

For policyholder dividend purposes only, Canada Life is operating the Closed Block as a closed block of participating business for the benefit of Participating Policies included therein. A block of assets in Canada Life's Participating Account has been allocated to the Closed Block sub-account. Assets allocated to the Closed Block will continue to be assets owned by Canada Life in its general account, subject to the same liabilities (in the same priority) to which other assets in its general account are subject.

As of the Effective Date, Canada Life cannot make any transfers from the Closed Block, except as is necessary to pay the guaranteed benefits and experience dividends in respect of the Participating Policies for which the Closed Block is being maintained. Although under certain circumstances, the Closed Block may be terminated, Canada Life must ensure that assets that are allocated to the Closed Block be used to provide for guaranteed benefits, policyholders' reasonable dividend expectations, and expenses and taxes relating to Participating Policies for which such account is being maintained.

Under the ICA, Participating Policyholders have rights upon completion of the Conversion that are accorded to participating policyholders of a stock life insurance company in Canada. Such rights include the right to elect at least one-third of the directors of Canada and the right to receive policy dividends that are declared.

18. In summary, it is represented that the transactions satisfied or will satisfy the statutory criteria for an exemption under section 408(a) of the Act because:

(a) The Conversion Proposal was implemented pursuant to stringent procedural and substantive safeguards imposed under Canadian and Michigan law, will not require any ongoing supervision by the Department.

(b) One or more independent Plan fiduciaries had an opportunity to determine whether to vote to approve the Conversion Proposal and will be responsible for all such decisions that were permitted under the Conversion regarding the form of consideration to be received in return for Ownership Rights.

(c) Eligible Policyholders that were Plans were permitted to acquire Common Shares, Cash, or Policy Credits in exchange for, and in extinguishment of, their Ownership Rights in Canada Life and no Eligible Policyholder has paid or will pay any brokerage commissions or fees to Canada Life or its affiliates in connection with the receipt of Common Shares, the implementation of the Share Sale Service or the Assisted Sales Program.

(d) Neither Canada Life nor its affiliates exercised discretion with respect to voting on the Conversion Proposal or with respect to any election to be made by any Eligible Policyholder which was a Plan, nor did they provide ''investment advice'' as that term is defined in 29 CFR 2510.3–21(c) with respect to any election made by such Plan policyholder.

(e) The Conversion Proposal will not change premiums or reduce policy benefits, values, guarantees or other policy obligations of Canada Life to its policyholders.

FOR FURTHER INFORMATION CONTACT: Ms. Jan D. Broady of the Department, telephone (202) 219–8881. (This is not a toll-free number.)

General Information

The attention of interested persons is directed to the following:

(1) The fact that a transaction is the subject of an exemption under section 408(a) of the Act and/or section 4975(c)(2) of the Code does not relieve a fiduciary or other party in interest or disqualified person from certain other provisions of the Act and/or the Code, including any prohibited transaction provisions to which the exemption does not apply and the general fiduciary responsibility provisions of section 404 of the Act, which, among other things, require a fiduciary to discharge his duties respecting the plan solely in the interest of the participants and beneficiaries of the plan and in a prudent fashion in accordance with section 404(a)(1)(b) of the Act; nor does it affect the requirement of section 401(a) of the Code that the plan must operate for the exclusive benefit of the employees of the employer maintaining the plan and their beneficiaries;

(2) Before an exemption may be granted under section 408(a) of the Act and/or section 4975(c)(2) of the Code, the Department must find that the exemption is administratively feasible, in the interests of the plan and of its participants and beneficiaries, and protective of the rights of participants and beneficiaries of the plan;

(3) The proposed exemptions, if granted, will be supplemental to, and not in derogation of, any other provisions of the Act and/or the Code, including statutory or administrative exemptions and transitional rules. Furthermore, the fact that a transaction is subject to an administrative or statutory exemption is not dispositive of whether the transaction is in fact a prohibited transaction; and

(4) The proposed exemptions, if granted, will be subject to the express condition that the material facts and

[12] Because a United States Eligible Policyholder will receive the average price paid for the Common Shares on the date of the sale, Canada Life represents that the price may not correspond exactly to the price quoted in the newspaper or elsewhere. Therefore, within 7 business days of the receipt of an Eligible Policyholder's properly completed documents (*i.e.,* the sales request form, taxpayer identification number and certification form, and the share ownership statement or share certificate), Equi-Serve Trust will mail the United States Eligible Policyholder a check in U.S. dollars, made out in the names of all owners. In addition, the Eligible Policyholder will receive a statement showing the amount of the check, the average price paid for the Common Shares in Canadian dollars converted to U.S. dollars, the administration charge deducted and any applicable withholding tax. The amount of Canadian dollars will be converted to U.S. dollars at the wholesale Interbank rate in effect at the time of the sale.

representations contained in each application are true and complete, and that each application accurately describes all material terms of the transaction which is the subject of the exemption.

Signed at Washington, DC, this 1st day of May, 2000.

Ivan Strasfeld,

Director of Exemption Determinations, Pension and Welfare Benefits Administration, Department of Labor.

[FR Doc. 00–11127 Filed 5–3–00; 8:45 am]

BILLING CODE 4510–29–P

FEDERAL MINE SAFETY AND HEALTH REVIEW COMMISSION

Sunshine Act Meeting

TIME AND DATE: 10: a.m., Thursday, May 4, 2000.

PLACE: Room 6005, 6th Floor, 1730 K Street, NW., Washington, DC.

STATUS: Open.

MATTERS TO BE CONSIDERED: The Commission will consider and act upon the following:

1. *Local 2232, UMWA* v. *Island Creek Coal Co.,* Docket No. VA 99–79–C (Issues include whether miners were idled by MSHA's section 107 withdrawal order, thereby qualifying them for compensation under section 111 of the Mine Act).

Any person attending an open meeting who requires special accessibility features and/or auxiliary aids, such as sign language interpreters, must inform the Commission in advance of those needs. Subject to 29 CFR §§ 2706.150(a)(3) and 2706.160(d).

CONTACT PERSON FOR MORE INFO: Jean Ellen, (202) 653–5629/(202) 708–9300 for TDD Relay/1–800–877–8339 for toll free.

Jean H. Ellen,

Chief Docket Clerk.

[FR Doc. 00–11185 Filed 5–01–00; 4:32 pm]

BILLING CODE 3695–01–M

NATIONAL AERONAUTICS AND SPACE ADMINISTRATION

[Notice 00–044]

NASA Advisory Council, Life and Microgravity Sciences and Applications Advisory Committee Commercial Advisory Subcommittee; Meeting

AGENCY: National Aeronautics and Space Administration.

ACTION: Notice of meeting.

SUMMARY: In accordance with the Federal Advisory Committee Act, Pub. L. 92–463, as amended, the National Aeronautics and Space Administration announces a meeting of the NASA Advisory Council, Life and Microgravity Sciences and Applications Advisory Committee, Commercial Advisory Subcommittee.

DATES: Thursday, May 11, 2000, 9 a.m. to 12 noon.

ADDRESSES: National Aeronautics and Space Administration, Room MIC–5, 300 E Street SW, Washington, DC 20546.

FOR FURTHER INFORMATION CONTACT: Ms. Candace Livingston, Code UM, National Aeronautics and Space Administration, Washington, DC 20546; 202–358–0697.

SUPPLEMENTARY INFORMATION: The meeting will be closed to the public on Thursday, May 11, 2000, from 12 noon to 4 p.m. in accordance with 5 U.S.C. 552b(c)(4), for a briefing on Commercial Space Center activities which will contain proprietary information. The meeting will be open to the public on Thursday, May 11, 2000, from 9 a.m. to 12 noon. The agenda for the meeting is as follows:

Report on LMSAAC Activities
Report on SSUAS Activities
Status of Current Commercial Program Activities
Organizational Status
Discussion of Commercial Strategy
Briefing on Commercial Space Center Activities
Recommendations and Wrap-Up

It is imperative that the meeting be held on this date to accommodate the scheduling priorities of the key participants. Visitors will be requested to sign a visitors' register.

Dated: April 27, 2000.

Matthew M. Crouch,

Advisory Committee Management Officer, National Aeronautics and Space Administration.

[FR Doc. 00–11130 Filed 5–3–00; 8:45 am]

BILLING CODE 7510–01–P

NATIONAL AERONAUTICS AND SPACE ADMINISTRATION

[Notice 00–045]

Notice of Prospective Patent License

AGENCY: National Aeronautics and Space Administration.

ACTION: Notice of prospective patent license.

SUMMARY: NASA hereby gives notice that USA Video Interactive, Corp., of Mystic, CT, has applied for an exclusive license to practice the invention disclosed in U.S. Patent No. 5,426,512 entitled ''Image Data Compression Having Minimum Perceptual Error (DCTUNE)'' and U.S. Patent No. 5,629,780 entitled ''Image-Adapted Visually Weighted Quantization Matrices For Digital Image Compression'' which is assigned to the United States of America as represented by the Administrator of the National Aeronautics and Space Administration. Written objections to the prospective grant of a license should be sent to Ames Research Center.

DATES: Responses to this notice must be received by July 3, 2000.

FOR FURTHER INFORMATION CONTACT: Robert Padilla, Patent Counsel, NASA Ames Research Center, M/S 202A–3, Moffett Field, CA 94035–1000, (650) 604–5104.

Dated: April 26, 2000.

Edward A. Frankle,

General Counsel.

[FR Doc. 00–11132 Filed 5–3–00; 8:45 am]

BILLING CODE 7510–01–P

NATIONAL CREDIT UNION ADMINISTRATION

Notice of Meetings

TIME AND DATE: 10 a.m., Monday, May 8, 2000.

PLACE: Board Room, 7th Floor, Room 7047, 1775 Duke Street, Alexandria, VA 22314–3428.

STATUS: Open.

MATTER TO BE CONSIDERED:

1. Final Rule: Amendments to Parts 716 and 741, NCUA's Rules and Regulations, Privacy of Consumer Financial Information; Requirements for Insurance.

RECESS: 10:45 a.m.

TIME AND DATE: 11 a.m., Monday, May 8, 2000.

PLACE: Board Room, 7th Floor, Room 7047, 1775 Duke Street, Alexandria, VA 22314–3428.

STATUS: Closed.

MATTER TO BE CONSIDERED:

1. One (1) Personnel Matter. Closed pursuant to exemptions (2) and (6).

FOR FURTHER INFORMATION CONTACT: Becky Baker, Secretary of the Board, Telephone (703) 518–6304.

Becky Baker,

Secretary of the Board.

[FR Doc. 00–11245 Filed 5–2–00; 11:11 am]

BILLING CODE 7535–01–M

NATIONAL FOUNDATION ON THE ARTS AND THE HUMANITIES

Meeting of the National Museum Services Board

AGENCY: Institute of Museum and Library Services.

ACTION: Notice of meeting.

SUMMARY: This notice sets forth the agenda of a forthcoming meeting of the National Museum Services Board. This notice also describes the function of the board. Notice of this meeting is required under the Government through the Federal Advisory Committee Act 5 U.S.C. App., and regulations of the Institute of Museum and Library Services, 45 CFR 1180.84.

Time/Date: 1:30 p.m.–3:30 p.m. on Thursday, May 18, 2000.

Status: Open.

Address: The Walter Art Gallery, Hackerman House Conference Room, 600 N. Charles Street, Baltimore, MD2 20004, (410) 547–9000.

FOR FURTHER INFORMATION CONTACT: Elizabeth Lyons, Special Assistant to the Director, Institute of Museum and Library Services, 1100 Pennsylvania Avenue, NW, Room 510, Washington, DC 20506, (202) 606–4649.

SUPPLEMENTARY INFORMATION: The National Museum Services Board is established pursuant to 20 U.S.C. Section 9175. The Board has responsibility for the general policies with respect to the powers, duties, and authorities vested in the Institute under the Museum Services Act.

The meeting on Thursday, May 18, 2000 will be open to the public. If you need special accommodations due to a disability, please contact: Institute of Museum and Library Services, 1100 Pennsylvania Avenue, NW, Washington, DC 20506—(202) 606–8536—TDD (202) 606–8636 at least seven (7) days prior to the meeting date.

Agenda

78th Meeting of the National Museum Services Board in The Hackerman House Conference Room at the Walter Art Gallery, 600 N. Charles Street, Baltimore, MD 21201 on Thursday, May 18, 2000, 1:30 pm–3:30 pm

I. Chairperson's Welcome and Minutes of the 77th NMSB Meeting—November 5, 2000
II. Director's Report
III. Departmental Reports
  Legislative/Public Affairs Report
  Office of Research and Technology Report
  Office of Museum Services Program Report
  Office of Library Services Program Report
IV. Museums, Libraries and the 21st Century Learner
V. Perspectives on Fundraising

Dated: April 28, 2000.

Linda Bell,

Director of Policy, Planning and Budget, National Foundation on the Arts and Humanities, Institute of Museum and Library Services.

[FR Doc. 00–11186 Filed 5–1–00; 8:45 am]

BILLING CODE 70386–01–M

NUCLEAR REGULATORY COMMISSION

[Docket Nos. 50–317, 50–318, and 72–8]

Baltimore Gas and Electric Company, Calvert Cliffs Nuclear Power Plant, Unit Nos. 1 and 2 and Calvert Cliffs Independent Spent Fuel Storage Installation; Notice of Consideration of Approval of Transfer of Renewed Facility Operating Licenses and Materials License and Conforming Amendment, and Opportunity for a Hearing

The U.S. Nuclear Regulatory Commission (the Commission) is considering the issuance of an order under 10 CFR 50.80 approving the transfer of Renewed Facility Operating Licenses Nos. DPR–53 and DPR–69 for the Calvert Cliffs Nuclear Power Plant, Unit Nos. 1 and 2 (CCNPP), and Materials License No. SNM–2505 for the Calvert Cliffs Independent Spent Fuel Storage Installation (ISFSI) currently held by Baltimore Gas and Electric Company (BGE), as owner and licensed operator of CCNPP and the ISFSI. The transfer would be to Calvert Cliffs, Inc. The Commission is also considering amending the licenses and Technical Specifications (TSs) for administrative purposes to reflect the proposed transfer.

By application dated February 29, 2000, as supplemented April 7, 2000, BGE requested the Commission's approval of the proposed license transfers as part of the corporate restructuring of BGE in accordance with Maryland's Electric Customer Choice and Competition Act of 1999. Under this restructuring, Constellation Energy Group, Inc. (''Constellation Energy''), the parent of BGE, has formed a wholly owned subsidiary, Constellation Nuclear Group, LLC (''CN''). BGE proposes to transfer ownership of and the licenses for CCNPP and the ISFSI to a subsidiary of BGE, Calvert Cliffs, Inc. (''Company''). BGE will then transfer the ownership of Company to Constellation Energy, which in turn will transfer the ownership of Company to CN. The result will be that CN, as owned by Constellation Energy, will own Company, which will be the owner and licensee of CCNPP and the ISFSI.

The proposed amendments would revise the licenses and the ISFSI TSs, to reflect their transfer from BGE to Company.

Pursuant to 10 CFR 50.80 and 10 CFR 72.50, no license, or any right thereunder, shall be transferred, directly or indirectly, through transfer of control of the license, unless the Commission shall give its consent in writing. The Commission will approve an application for the transfer of a license, if the Commission determines that the proposed transferee is qualified to be the holder of the license, and that the transfer is otherwise consistent with applicable provisions of law, regulations, and orders issued by the Commission pursuant thereto.

Before issuance of the proposed conforming license amendments, the Commission will have made findings required by the Atomic Energy Act of 1954, as amended (the Act), and the Commission's regulations.

As provided in 10 CFR 2.1315, unless otherwise determined by the Commission with regard to a specific application, the Commission has determined that any amendment to the license of a utilization facility or the license of an ISFSI which does no more than conform the license to reflect the transfer action, involves respectively, ''no significant hazards consideration'' or ''no genuine issue as to whether the health and safety of the public will be significantly affected.'' No contrary determination has been made with respect to this specific license amendment application. In light of the generic determinations reflected in 10 CFR 2.1315, no public comments with respect to significant hazards considerations are being solicited, notwithstanding the general comment procedures contained in 10 CFR 50.91.

The filing of requests for hearing and petitions for leave to intervene, and written comments with regard to the license transfer application, are discussed below.

By May 24, 2000, any person whose interest may be affected by the Commission's action on the application may request a hearing, and, if not the applicants, may petition for leave to intervene in a hearing proceeding on the Commission's action. Requests for a hearing and petitions for leave to intervene should be filed in accordance with the Commission's rules of practice set forth in Subpart M, ''Public Notification, Availability of Documents and Records, Hearing Requests and Procedures for Hearings on License Transfer Applications,'' of 10 CFR part 2. In particular, such requests and petitions must comply with the

requirements set forth in 10 CFR 2.1306, and should address the considerations contained in 10 CFR 2.1308(a). Untimely requests and petitions may be denied, as provided in 10 CFR 2.1308(b), unless good cause for failure to file on time is established. In addition, an untimely request or petition should address the factors that the Commission will also consider, in reviewing untimely requests or petitions, set forth in 10 CFR 2.1308(b)(1)–(2).

Requests for a hearing and petitions for leave to intervene should be served upon Jay Silberg, Esq., counsel for BGE, at Shaw, Pittman, Potts and Trowbridge, 2300 N Street, NW, Washington, DC 20037 (tel: 202–663–8063; fax: 202–663–8007; e-mail: jay.silberg@shawpittman.com); the General Counsel, U.S. Nuclear Regulatory Commission, Washington, DC 20555 (e-mail address for filings regarding license transfer cases only: OGCLT@NRC.gov); and the Secretary of the Commission, U.S. Nuclear Regulatory Commission, Washington, DC 20555–0001, Attention: Rulemakings and Adjudications Staff, in accordance with 10 CFR 2.1313.

The Commission will issue a notice or order granting or denying a hearing request or intervention petition, designating the issues for any hearing that will be held and designating the Presiding Officer. A notice granting a hearing will be published in the **Federal Register** and served on the parties to the hearing.

As an alternative to requests for hearing and petitions to intervene, by June 5, 2000, persons may submit written comments regarding the license transfer application, as provided for in 10 CFR 2.1305. The Commission will consider and, if appropriate, respond to these comments, but such comments will not otherwise constitute part of the decisional record. Comments should be submitted to the Secretary, U.S. Nuclear Regulatory Commission, Washington, DC 20555–0001, Attention: Rulemakings and Adjudications Staff, and should cite the publication date and page number of this **Federal Register** notice.

For further details with respect to this action, see the application dated February 29, 2000, as supplemented April 7, 2000, available for public inspection at the Commission's Public Document Room, the Gelman Building, 2120 L Street, NW., Washington, DC, and accessible electronically through the ADAMS Public Electronic Reading Room link at the NRC Web site (http://www.nrc.gov).

Dated at Rockville, Maryland this 28th day of April 2000.

For the Nuclear Regulatory Commission.

Elinor G. Adensam,

Director, Project Directorate I, Division of Licensing Project Management, Office of Nuclear Reactor Regulation.

[FR Doc. 00–11102 Filed 5–3–00; 8:45 am]

BILLING CODE 7590–01–P

NUCLEAR REGULATORY COMMISSION

[Docket No. 50–116]

Iowa State University, UTR–10 Research Reactor; Environmental Assessment and Finding of No Significant Impact

The U.S. Nuclear Regulatory Commission (the Commission) is considering the issuance of a license amendment to Facility License No. R–59, issued to Iowa State University (ISU or the licensee), that would allow decommissioning of the UTR–10 Research Reactor located on the west edge of the main campus of the ISU, in Ames, Iowa.

Environmental Assessment

Identification of the Proposed Action

By application dated January 6, 1999, the licensee submitted a decommissioning plan in accordance with 10 CFR 50.82(b), in order to dismantle the 10-kilowatt (thermal) ISU UTR–10 Argonaut Research Reactor, to dispose of its component parts and radioactive material, and to decontaminate the facility in accordance with the proposed dismantling plan to meet the Commission's unrestricted release criteria. After the Commission verifies that the release criteria have been met, Facility License No. R–59 would be terminated. The licensee submitted an Environmental Report, dated January 4, 1999, that addresses the estimated environmental impacts resulting from decommissioning the UTR–10 reactor.

ISU ceased operating the reactor in May 1998. All the reactor fuel has been removed from the facility.

A ''Notice of Application for Decommissioning Amendment, Iowa State University UTR–10 Research Reactor'' was published in the **Federal Register** on January 25, 1999, 64 FR 3725. A ''Notice and Solicitation of Comments Pursuant to 10 CFR 20.1405 and 10 CFR 50.82(b)(5) Concerning Proposed Action to Decommission Iowa State University UTR–10 Research Reactor'' was published in the **Federal Register** on February 12, 1999, 64 FR 7214, and in the Ames, Iowa daily newspaper, The Tribune, on February 19, 1999. There were no comments.

Need for the Proposed Action

The proposed action is necessary because of ISU's decision to cease operations permanently. As specified in 10 CFR 50.82, any licensee may apply to the Nuclear Regulatory Commission for authority to surrender a license voluntarily and to decommission the affected facility. Further, 10 CFR 51.53(d) stipulates that each applicant for a license amendment to authorize decommissioning of a production or utilization facility shall submit with its application an environmental report that reflects any new information or significant environmental change associated with the proposed decommissioning activities. ISU is planning to use the area that would be released for other academic purposes.

Environmental Impact of the Proposed Action

All decontamination will be performed by trained personnel in accordance with previously reviewed procedures, and will be overseen by experienced health physics staff. Solid and liquid waste will be removed from the facility and managed in accordance with NRC requirements. The operations are calculated to result in a total occupational radiation exposure of 2.4 person-rem. Radiation exposure to the general public during decommissioning is expected to be zero. This will be accomplished by keeping the public at a safe distance and by eliminating effluent releases during decommissioning.

Occupational and public exposure may result from offsite disposal of the low-level residual radioactive material from the ISU. The handling, storage, and shipment of this radioactive material are to meet the requirements of 10 CFR 20.2006, and ''Transfer for Disposal and Manifest,'' 49 CFR parts 100–177, ''Transportation of Hazardous Materials.'' The proposed low-level radioactive waste facility (LLRW) has the licenses and permits to accept and dispose LLRW from reactor decommissioning projects. The materials that are classified LLRW will be packaged and shipped from ISU directly to this facility for disposal.

The NRC Final Rule on License Termination, 10 CFR 20.1402, provides radiological criteria for release of a site for unrestricted use. Release criteria for unrestricted use is a maximum Total Effective Dose Equivalent (TEDE) of 25 mrem per year from residual radioactivity above background.

Application of As Low As Reasonably Achievable (ALARA) is also a requirement. The results of the final survey will be used to demonstrate that the predicted dose to a member of the public from any residual activity does not exceed the 25 mrem per year dose limit.

All liquid waste that is generated during the decommissioning activities will be collected in barrels and disposed of in accordance with state and Federal guidelines. All decommissioning activities will be carried out within the Nuclear Engineering Laboratory's confinement boundary. Additional containment measures will be taken as necessary to minimize the spread of contamination within the confinement boundary. These measures will include wood framing covered with plastic and low volume water misting. Airborne releases of radioactive materials are not expected. Dust production will be minimized by low volume water mist at points where dust is produced.

Based on the review of the specific proposed activities associated with the dismantling and decontamination of the ISU facility, the staff has determined that the proposed action will not increase the probability or consequences of accidents, no changes are being made in the types of any effluents that may be released off site, and there is no significant increase in occupational or public radiation exposure. Therefore, there are no significant radiological environmental impacts associated with the proposed action.

With regard to potential non-radiological impacts, the proposed action does not involve any historic sites. It does not affect non-radiological plant effluents and has no other environmental impact. Therefore, there are no significant non-radiological environmental impacts associated with the proposed action.

Accordingly, the Commission concludes that there are no significant environmental impacts associated with the proposed action.

Alternatives to the Proposed Action

The four alternatives for disposition of the UTR–10 reactor are: DECON, SAFSTOR, ENTOMB, and no action. These alternatives are defined as follows:

DECON is the alternative in which the equipment, structures, and portions of the facility containing radioactive contaminants are removed or decontaminated to a level that permits the property to be released for unrestricted use after cessation of operations. SAFSTOR is the alternative in which the nuclear facility is placed and maintained in a condition that allows the nuclear facility to be safely stored and subsequently decontaminated (deferred decontamination) to levels that permit release for unrestricted use. ENTOMB is the alternative in which radioactive contaminants are encased in a structurally long-lived material, such as concrete; the entombed structure is appropriately maintained; and continued surveillance is carried out until the radioactivity decays to a level permitting release of the property for unrestricted use. The no-action alternative would leave the facility in its present configuration. However, the regulations in 10 CFR 50.82(b) only allow a limited time for this condition to exist.

The radiological impacts of SAFSTOR would be less because of radioactive decay prior to DECON. The ENTOMB option would result in lower radiological exposure but continued use of resources. ISU has determined that the proposed action (DECON) is the most efficient use of the existing facility, since it proposes to use the space that will become available for other academic purposes. The SAFSTOR, ENTOMB, and no-action alternatives would entail continued surveillance and physical security measures to be in place and continued monitoring by licensee personnel.

Alternative Use of Resources

This action does not involve the use of any resources not previously considered in the Environmental Report submitted on January 4, 1999, and the Decommissioning Report submitted on January 6, 1999, for the UTR–10 reactor.

Agencies and Persons Contacted

In accordance with its stated policy, on March 7, 2000, the staff consulted with the Iowa State official, Donald A. Flater, Chief, Bureau of Radiological Health, Iowa Department of Public Health, regarding the environmental impact of the proposed action. The state official had no comments.

Finding of No Significant Impact

On the basis of the environmental assessment, the Commission concludes that the proposed action will not have a significant effect on the quality of the human environment. Accordingly, the NRC has determined not to prepare an environmental impact statement for the proposed action.

For further details with respect to the proposed action, see the licensee's letters dated January 4, and 6, 1999, which are available for public inspection at the NRC's Public Document Room, the Gelman Building, 2120 L Street, NW, Washington, DC 20555. Publicly available records will be accessible electronically from the ADAMS Public Library component on the NRC Web site, *http://www.nrc.gov* (the Electronic Reading Room).

Dated at Rockville, Maryland, this 26th day of April 2000.

For the Nuclear Regulatory Commission.

Ledyard B. Marsh,

Branch Chief, Events Assessment, Generic Communications and Non-Power Reactors Branch, Division of Regulatory Improvement Programs, Office of Nuclear Reactor Regulation.

[FR Doc. 00–11103 Filed 5–3–00; 8:45 am]

BILLING CODE 7590–01–P

OCCUPATIONAL SAFETY AND HEALTH REVIEW COMMISSION

Agency Information Collection Request

AGENCY: Occupational Safety and Health Review Commission.

ACTION: Notice; Submission for OMB Review; Comment Request.

SUMMARY: The Occupational Safety and Health Review Commission (OSHRC) submitted the following requirements to OMB for review and clearance under the Paperwork Reduction Act of 1965, Pub. L. 104–13. Interested persons may obtain copies of the submissions by calling the OSHRC Clearance Officer listed. Send comments regarding this information collection to the OMB reviewer listed and to the OSHRC Clearance Officer, Occupational Safety and Health Review Commission, 1120 20th Street, N.W., Ninth Floor, Washington, DC 20036–3419.

DATES: Submit written comments on or before May 18, 2000.

SUPPLEMENTARY INFORMATION:

OMB Number: Not applicable, new submission.

Form Number: Not applicable.

Type of Review: Emergency—Approval requested by: 05/26/00.

Title: Evaluation of ''Settlement Part'' and Evaluation of ''E–Z Trial''.

Description: Information collection is required to evaluate the Review Commission's ''Settlement Part'' process. The Review Commission is also collecting information from key stakeholders to evaluate the ''E–Z–Trial'' program.

Respondents: Employers and/or their representatives, labor organizations and staff of the Office of the Solicitor of Labor who have been involved in cases with the Review Commission.

Estimated Number of Responses: 80.

Estimated Burden Hours Per Response: 30 minutes.

Estimated Total Reporting Burden: 130 hours.

ADDRESSES: Ledia Esther Bernal, OSHRC Clearance Officer, 202–606–5390, Occupational Safety and Health Review Commission, 1120 20th Street, N.W., Ninth Floor, Washington, DC 20036–3419, Stuart Shapiro, OMB Reviewer, (202) 395–7857, Office of Management and Budget, Room 10202, New Executive Office Building, Washington, DC 20503.

Patricia A. Randle,

Executive Director.

[FR Doc. 00–11081 Filed 5–3–00; 8:45 am]

BILLING CODE 7600–01–P

OFFICE OF MANAGEMENT AND BUDGET

Request for Agency and Public Comments

AGENCY: Office of Management and Budget, Executive Office of the President.

ACTION: Request for agency and public comments.

SUMMARY: The Office of Management and Budget (OMB) publishes a request for agency and public comments on three proposed technical changes to the OMB Circular A–76 Revised Supplemental Handbook.

DATES: Agency and public comments on the proposed changes are due to OMB not later than June 19, 2000.

ADDRESSES: Address all comments to the Office of Federal Procurement Policy, NEOB Room 9013, Office of Management and Budget, 725 17th Street, NW, Washington, DC 20503, FAX Number (202) 395–5105.

FOR FURTHER INFORMATION CONTACT: Mr. David C. Childs, Office of Federal Procurement Policy, Telephone No. (202) 395–6104.

AVAILABILITY: Copies of the OMB Circular A–76, its Revised Supplemental Handbook and currently applicable Transmittal Memoranda may be obtained at the OMB Home page. The online address (URL) is http://www.whitehouse.gov/OMB/circulars/index.html#numerical.

Interested parties are reminded that OMB Circular No. A–76, Transmittal Memoranda 1 through Transmittal Memorandum 14 are canceled. Transmittal Memorandum No. 15 provided the Revised Supplemental Handbook dated March 27, 1996 (**Federal Register**, April 1, 1996, pages 14338–14346) and remains in effect. Transmittal Memoranda No. 16, 17 and 18, which provided previous A–76 related Federal pay raise and inflation factor assumptions are canceled. Transmittal Memorandum No. 19, to the extent that it provided last year's A–76 related Federal pay raise and inflation factor assumptions, is canceled. The standard retirement cost factors for the weighted average CSRS/FERS pension and Federal retiree health cost numbers and the post-retirement health costs also provided by Transmittal Memorandum No. 19, remain in effect. Transmittal 20, which implemented the Federal Activities Inventory Reform (FAIR) Act, remains in effect.

SUPPLEMENTARY INFORMATION:

1. In last year's Federal Activities Inventory Reform Act (FAIR) guidance (OMB Circular A–76 Transmittal Memorandum No. 20), OMB stated that the statutory 30-day and 28-day challenge and challenge response periods would be calendar days, while the 10-day appeal period would be working days. OMB is aware that the 30-day deadline for filing challenges was very difficult to meet in 1999. OMB therefore proposes to change, Appendix 2, paragraph g.3., of the Revised Supplemental Handbook to provide for 30-working days. It is likewise proposed that Appendix 2, paragraph g.4., be changed to reflect 28-working days.

2. When asked what, if any, other changes are needed to the Supplemental Handbook, the Department of Defense expressed only one concern—that Part 1, Chapter 3, paragraph K.1.e., which requires appellants to ''demonstrate that the items appealed (in an A–76 cost comparison) individually or in aggregate, would reverse the tentative decision,'' appears to be in conflict with the statement at Part 1, Chapter 3, paragraph K.7., that provides that sequential appeals are not authorized. It has been suggested that these two statements create an inappropriate standard for the initial winner of the tentative decision. We agree. All concerns regarding the conduct of a cost comparison should be brought forward to the appeal authority within the single appeal period. Therefore, to ensure that all relevant concerns with the conduct of a cost comparison are brought forward, it is proposed that Part 1, Chapter 3, paragraph K.1.e. be voided.

3. Recently, the General Accounting Office expressed concerns regarding the inclusion of Federal employees, whose jobs are included in an A–76 cost comparison study, as members of a related A–76 Source Selection Team. As a result, OMB has decided to strengthen its long standing policy limiting such participation, as a better business practice. Individuals who hold positions in an A–76 study should not be members of the Source Selection Team, unless an exception is authorized by the head of the contracting activity. Exceptions may be authorized only in compelling circumstances and, in such cases, the head of the contracting activity will provide a written statement of the reasons for the action. OMB has also been concerned that serving on a Source Selection Team develops certain important skills among the employees that the Government could be in greater risk of losing, if this ''workforce investment'' became subject to being outsourced. OMB has, therefore, determined that restrictions on source selection evaluation or advisory team membership should be clarified. OMB proposes to revise Part 1, Chapter 3 paragraph H. 3.b. of the Revised Supplemental Handbook as follows:

b. ''The Government should establish a source selection evaluation or advisory team. Individuals who hold positions in the function under study should not be members of the team, unless an exception is authorized by the head of the contracting activity. Exceptions will be authorized only in compelling circumstances and, in such cases, the head of the contracting activity shall provide a written statement of the reasons for the action.''

Sylvia M. Mathews,

Deputy Director.

Circular No. A–76 (Revised)

Transmittal Memorandum No. 22

To the Heads of Executive Departments and Agencies

Subject: Performance of Commercial Activities

This Transmittal Memorandum implements changes to the OMB Circular A–76 Revised Supplemental Handbook in furtherance of the requirements of the Federal Activities Inventory Reform Act (''The FAIR Act''), Public Law 105–270 and to clarify other issues of concern. The March 1996 Revised Supplemental Handbook was issued through Transmittal Memorandum 15, published in the April 1, 1996, **Federal Register** at pages 14338–14346. The March 1996 Revised Supplemental Handbook was further revised to implement the requirements of the FAIR Act on June 14, 1999, **Federal Register** at pages 33927–33935.

The Federal Activities Inventory Reform Act (FAIR) provides that there shall be a 30-day administrative challenge period available to interested parties who might wish to challenge and agency's decision to include or omit an activity from the list of potential commercial activities. As a part of OMB Circular A–76 Transmittal Memorandum No. 20, dated June 14,

1999, OMB stated that the statutory 30-day and 28-day challenge and challenge response periods would be calendar days, while the 10-day appeal period would be working days. OMB is aware that the 30-day deadline for filing challenges was very difficult to meet in 1999. Appendix 2, paragraph g.3., of the Revised Supplemental Handbook is, therefore, revised to reflect 30-working days. Appendix 2, paragraph g.4., is also changed to reflect 28-working days.

Concern has been expressed that Part 1, Chapter 3, paragraph K.1.e., may be in conflict with the statement at Part 1, Chapter 3, paragraph K.7., that provides that sequential administrative cost comparison appeals are not authorized. It is OMB's view that all concerns regarding the conduct of a cost comparison should be brought forward to the designated appeal authority within the single appeal period. Therefore, to ensure that all relevant concerns with the conduct of a cost comparison are brought forward, Part 1, Chapter 3, paragraph K.1.e. is hereby voided.

And finally, OMB has been concerned that the use of Federal employees on Source Selection Teams, when those employees are subject to losing their jobs or otherwise being adversely affected by the award of the contract being reviewed by that Source Selection Team, is a poor business practice. OMB is also concerned that such a practice puts certain important skills that are developed by participating on a Source Selection Team at Risk. Therefore, OMB revises Part 1, Chapter 3 paragraph H. 3.b. of the Revised Supplemental Handbook as follows:

b. ''The Government should establish a source selection evaluation or advisory team. Individuals who hold positions in the function under study should not be members of the team, unless an exception is authorized by the head of the contracting activity. Exceptions will be authorized only in compelling circumstances and, in such cases, the head of the contracting activity shall provide a written statement of the reasons for the action. As a result, OMB has decided to strengthen its long standing policy limiting such participation, as a better business practice. Individuals who hold positions in an A–76 study should not be members of the Source Selection Team, unless an exception is authorized by the head of the contracting activity. Exceptions may be authorized only in compelling circumstances and, in such cases, the head of the contracting activity will provide a written statement of the reasons for the action.''

All changes in this Transmittal Memorandum are effective immediately and shall apply to all cost comparisons in process where the Government's in-house cost estimate has not been publicly revealed before this date. Current A–76 guidance can be accessed at OMB's homepage at *http://www.whitehouse.gov/OMB/circulars/index.html#numerical.*

Sylvia M. Mathews,

Deputy Director.

[FR Doc. 00–11155 Filed 5–3–00; 8:45 am]

BILLING CODE 3110–01–P

OFFICE OF MANAGEMENT AND BUDGET

Issuance of Transmittal Memorandum No. 21 Amending OMB Circular No. A–76, ''Performance of Commercial Activities''

AGENCY: Office of Management and Budget, Executive Office of the President.

ACTION: Issuance of Transmittal Memorandum No. 21, amending OMB Circular No. A–76, ''Performance of Commercial Activities.''

SUMMARY: This Transmittal Memorandum updates the annual Federal pay raise assumptions and inflation factors used for computing the Government's in-house personnel and non-pay costs, as generally provided in the President's Budget for Fiscal Year 2001.

DATES: All changes in the Transmittal Memorandum are effective immediately and shall apply to all cost comparisons in process where the Government's in-house cost estimate has not been publicly revealed before this date.

FOR FURTHER INFORMATION CONTACT: Mr. David C. Childs, Office of Federal Procurement Policy, NEOB Room 9013, Office of Management and Budget, 725 17th Street, NW, Washington, DC 20503, Tel. No. (202) 395–6104.

AVAILABILITY: Copies of the OMB Circular A–76, its Revised Supplemental Handbook and currently applicable Transmittal Memoranda may be obtained at the OMB Homepage on the Internet. The online address (URL) is *http://www.whitehouse.gov/OMB/circulars/index.html#numerical.*

Sylvia M. Mathews,

Deputy Director.

Circular No. A–76 (Revised)

Transmittal Memorandum No. 21

To the Heads of Executive Departments and Agencies

Subject: Performance of Commercial Activities

This Transmittal Memorandum updates the annual Federal pay raise assumptions and inflation factors used for computing the Government's in-house personnel and non-pay costs, as generally provided in the President's Budget for Fiscal Year 2001.

The non-pay inflation factors are for purposes of A–76 cost comparison determinations only. They reflect the generic non-pay inflation assumptions used to develop the FY 2001 Budget baseline estimates required by law. The law requires that a specific inflation factor (FY/FY G.D.P. chain price index) be used for this purpose. These inflation factors should not be viewed as estimates of expected inflation rates for specific major long-term procurement items or as an estimate of inflation for any particular agency's non-pay purchases mix.

Federal pay raise assumptions effective date	Military/civilian (percent)
January 2000	4.8
January 2001	3.7
January 2002	3.7
January 2003	3.2
January 2004	3.2
January 2005	3.2

Non-pay categories (supplies and equipment, etc.)	Percent
FY 1999	1.3
FY 2000	1.5
FY 2001	2.0
FY 2002	2.0
FY 2003	2.0
FY 2004	2.0
FY 2005	2.0

The pay rate (including geographic pay differentials) that are in effect for 2000 shall be included for the development of in-house personnel costs. The pay raise factors provided for 2001 and beyond shall be applied to all employees, with no assumption being made as to how they will be distributed between possible locality and ECI-based increases.

Agencies are reminded that OMB Circular No. A–76, Transmittal Memoranda 1 through Transmittal Memorandum 14 are canceled. Transmittal Memorandum No. 15 provided the Revised Supplemental Handbook dated March 27, 1996 (**Federal Register**, April 1, 1996, pages 14338–14346) and remains in effect. Transmittal Memoranda No. 16, 17 and 18, which provided previous A–76 related Federal pay raise and inflation factor assumptions are canceled.

Transmittal Memorandum No. 19, to the extent that it provided last year's A–76 related Federal pay raise and inflation factor assumptions, is canceled. The standard retirement cost factors for the weighted average CSRS/FERS pension and Federal retiree health cost numbers and the post-retirement health costs also provided by Transmittal Memorandum No. 19, remain in effect. Transmittal 20, with implemented the Federal Activities Inventory Reform (FAIR) Act, remains in effect. Current A–76 guidance can be accessed at OMB's Homepage at *http://www.whitehouse.gov/OMB/circulars/index.html#numerical*

Sylvia M. Mathews,

Deputy Director.

[FR Doc. 00–11156 Filed 5–3–00; 8:45 am]

BILLING CODE

SECURITIES AND EXCHANGE COMMISSION

[Rel. No. IC–24425; 812–11752]

Cohesion Technologies, Inc.; Notice of Application

April 27, 2000.

AGENCY: Securities and Exchange Commission (''SEC'').

ACTION: Notice of application for an order under sections 6(c) and 6(e) of the Investment Company Act of 1940 (the ''Act'').

SUMMARY OF APPLICATION: Applicant requests an order exempting it from all provisions of the Act, except sections 9, 17(e) (as modified in the application), 17(f) (as modified in the application), and 37 through 53 of the Act, and the rules and regulations under those sections, from the date the requested order is issued until the earlier of (a) August 18, 2001 or (b) the date applicant may no longer be deemed an investment company.

Filing Dates: The application was filed on August 18, 1999 and amended on November 18, 1999. Applicant has agreed to file an amendment, the substance of which is reflected in this notice, during the notice period.

Hearing or Notification of Hearing: An order granting the requested relief will be issued unless the SEC orders a hearing. Interested persons may request a hearing by writing to the SEC's Secretary and serving applicant with a copy of the request, personally or by mail. Hearing requests should be received by the SEC by 5:30 p.m. on May 22, 2000 and should be accompanied by proof of service on applicant, in the form of an affidavit or, for lawyers, a certificate of service. Hearing requests should state the nature of the writer's interest, the reason for the request, and the issues contested. Persons who wish to be notified of a hearing may request notification by writing to the SEC's Secretary.

ADDRESSES: Secretary, SEC, 450 Fifth Street, N.W., Washington, DC 20549–0609. Applicant, Cohesion Technology, Inc., 2500 Faber Place, Palo Alto, CA 94303.

FOR FURTHER INFORMATION CONTACT: Mary T. Geffroy, Senior Counsel, at (202) 942–0553, or Nadya Roytblat, Assistant Director, at (202) 942–0564 (Office of Investment Company Regulation, Division of Investment Management).

SUPPLEMENTARY INFORMATION: The following is a summary of the application. The complete application may be obtained for a fee at the SEC's Public Reference Branch, 450 Fifth Street, N.W., Washington, DC, 20549–0102 (tel. 202–942–8090).

Applicant's Representations

1. Applicant is a Delaware corporation that is engaged in the business of developing and commercializing proprietary surgical products. Applicant also is engaged directly or indirectly through majority-owned subsidiaries in the development and marketing of collagen-based biomaterials. Applicant became a public company on August 18, 1998, when it was spun-off from Collagen Aesthetics, Inc., formerly known as Collagen Corporation (''Collagen''). Collagen was engaged in the business of designing, developing, manufacturing, and marketing biomedical devices for the treatment of defective, diseased, traumatized or aging human tissues. Collagen currently focuses on the aesthetic and reconstructive cosmetic business. In anticipation of the spin-off, Collagen contributed several assets to applicant. Among the assets contributed to applicant by Collagen were minority interests in Boston Scientific Corporation (''Boston Scientific''), Innovasive Devices, Inc. (''Innovasive''), and Pharming, B.V. (''Pharming'').

2. Boston Scientific is a leading manufacturer of catheter-based devices. Collagen acquired its interest in Boston Scientific in January 1988 as a result of a joint venture between Collagen and Eli Lilly and Company. Since then, applicant has not acquired any additional shares of Boston Scientific and has continued to sell portions of its holdings in Boston Scientific to fund applicant's research and development activities. As of December 31, 1999, approximately 29% of applicant's total assets on an unconsolidated basis (exclusive of cash items and government securities) consisted of the stock of Boston Scientific. Applicant currently owns less than 1% of Boston Scientific's common stock. Applicant also acquired from Collagen certain rights and undertook certain obligations pursuant to various equity collar instruments to protect against fluctuations in the market value of its Boston Scientific stock.

3. Collagen also transferred to applicant a minority interest in Innovasive, a company engaged in the development, manufacture and marketing of tissue and bone reattachment systems. Collagen acquired Innovasive stock in connection with a joint venture (''Innovasive Agreements'') between the two companies to develop tissue fixation devices. Applicant assumed Collagen's rights and obligations under the Innovasive Agreements. As of December 31, 1999, applicant has an approximately 9% ownership interest in Innovasive, which represented approximately 9.6% of applicant's total assets on an unconsolidated basis (exclusive of cash items and government securities).

4. Finally, Collagen transferred to applicant a minority interest in Pharming, a company engaged in developing and commercializing human health care produced in transgenic animals. Collagen's investment in Pharming was made in connection with a collaborative agreement between the two companies for the development of a product to produce collagen in the milk of transgenic animals (''Pharming Agreement''). Applicant assumed Collagen's rights and obligations under the Pharming Agreement. As of December 31, 1999, applicant had an approximately 6% ownership interest in Pharming, which represented approximately 11.3% of applicant's total assets on an unconsolidated basis (exclusive of cash items and government securities).

Applicant's Legal Analysis

1. Section 3(a)(1)(C) of the Act defines ''investment company'' to include any issuer which is engaged or proposes to engage in the business of investing, reinvesting, owning, holding, or trading in securities, and owns or proposes to acquire investment securities having a value exceeding 40% of the value of that issuer's total assets (exclusive of Government securities and cash items) on an unconsolidated basis. Under section 3(a)(2), ''investment securities'' included all securities except

Government securities and securities issued by employee's securities companies and certain majority-owned subsidiaries.

2. Applicant's investments in Boston Scientific, Innovasive, and Pharming constitute ''investment securities'' within the meaning of section 3(a)(2) of the Act. Applicant states that as of December 31, 1999, these investment securities constituted more than 40% of its total assets (exclusive of cash items and government securities) on an unconsolidated basis. Applicant, therefore, is an investment company within the meaning of section 3(a)(1)(C) of the Act. Rule 3a–2 under the Act generally provides that, for purposes of section 3(a)(1)(C), an issuer will not be deemed to be engaged in the business of investing, reinvesting, owning, holding, or trading in securities for a period not to exceed one year if the issuer has a *bona fide* intent to be engaged in a non-investment company business. Applicant relied on rule 3a–2 for the period August 18, 1998 to August 18, 1999.

3. Section 6(c) of the Act permits the SEC to exempt any person, security, or transaction from any provision of the Act, if and to the extent that the exemption is necessary or appropriate in the public interest and consistent with the protection of investors and the purposes fairly intended by the policy and provisions of the Act. Section 6(e) permits the SEC to require companies exempted from registration requirements of the Act to comply with certain specified provisions of the Act as though the company were a registered investment company.

4. Applicant requests an exemption under sections 6(c) and 6(e) from all provisions of the Act except, sections 9, 17(e) (as modified below), 17(f) (as modified below, and 37 through 53 of the Act, and the rules and regulations under those sections, from the date the requested order is issued until the earlier of August 18, 2001 or the date applicant no longer may be deemed an investment company (the ''Exemption Period''). Applicant believes that within the Exemption Period it will be able to reduce its holdings of Boston Scientific stock so that applicant would no longer fall within the definition of investment company under section 3(a)(1)(C).

5. Applicant contends that granting the order under section 6(c) would be appropriate in the public interest and consistent with the protection of investors. Applicant states that it is an operating company that was not designed to be regulated under the Act, and that the requested temporary exemption would enable applicant to resolve its transient status under the Act. As conditions to the requested order, applicant also agrees to comply with certain provisions of the Act while the requested order is in effect.

6. Section 17(e) of the act generally makes it unlawful for any ''affiliated person'' of a registered investment company, or any affiliated person of an affiliated person, acting as agent, to receive compensation (other than regular salary or wages) for the purchase and sale of any property to or from the investment company or any company controlled by the investment company, or, acting as broker for the investment company in the purchase or sale of securities, to receive remuneration exceeding certain amounts. Applicant requests that the section 17(e) restrictions apply only to those employees of applicant who are also officers and directors of applicant. Applicant believes that it would be overly burdensome for it to investigate and identify all affiliations of its 82 employees. Further, applicant contends that because the employees who are not also officers or directors generally are not in a position to determine or influence applicant's actions, no policy reason would be served by requiring those person to comply with section 17(e). Applicant also requests that the provisions of section 17(e)(1) not apply to the occasional receipt by its employees, officers and directors of modest gifts and other forms of gratuity from third parties. Applicant contends that this relief is appropriate because it relates to routine business practices of companies that are not investment companies and because it involves items of *de minimis* value, such as non-lavish entertainment, holiday gifts and similar items. Applicant states that in all other respects, it will comply with section 17(e).

7. Under section 17(f) of the Act, a registered investment company may maintain custody of its securities and similar investments with a member of a national securities exchange, subject to rule 17f–1 under the Act. Rule 17f–1 prohibits the assets of an investment company held by a member of a national securities exchange from being subject to any lien or charge of any kind in favor of the custodian or any persons claiming through the custodian. With respect to applicant's assets that are held by a member of a national securities exchange, applicant requests relief from the provisions of rule 17f–1(b)(3) to permit the custodian to continue to hold applicant's securities and similar assets as collateral in connection with certain loans it grants to applicant. Applicant believes that, for the limited time during which applicant would be subject to rule 17f–1, it would neither be necessary nor cost effective for applicant to establish an account with a separate custodian solely for the purpose of holding securities as collateral for loans. Applicant states that, in all other respects it will comply with rule 17f–1.

Applicant's Conditions

Applicant agrees that the order granting the requested relief will be subject to the following conditions:

a. Applicant will not purchase or otherwise acquire any ''investment securities,'' as that term is defined in the Act, other than short-term investments including U.S. Government securities, money market funds, certificates of deposit, and commercial paper rated A–1/P–1 that are consistent with the preservation of capital;

b. Applicant will not hold itself out as being engaged primarily in the business of investing, reinvesting, or trading in securities;

c. Applicant will allocate and utilize its accumulated cash and securities for the purpose of funding its business of developing and commercializing proprietary surgical products and other biomedical products;

d. Applicant will not sell any of its investment securities (other than those described in condition (a) above) to any affiliated person of applicant, or any affiliated person of an affiliated person of applicant; and

e. While any order is in effect, applicant's Form 10–K, Form 10–Q and annual reports to shareholders will state that an exemptive order has been granted under sections 6(c) and 6(e) of the Act and that applicant, and other persons in their transactions with applicant, are subject to sections 9, 17(e), 17(f) and 37 through 53 of the Act, and the rules and regulations under these sections, with certain exceptions as described in the application as if applicant were a registered investment company.

For the Commission, by the Division of Investment Management, under delegated authority.

Jonathan G. Katz,

Secretary.

[FR Doc. 00–11080 Filed 5–3–00; 8:45 am]

BILLING CODE 8010–01–M

DEPARTMENT OF STATE

[Public Notice 3305]

Bureau of Educational and Cultural Affairs Southeast Europe Youth Leadership Program; Notice: Request for Proposals

SUMMARY: The Office of Citizen Exchanges, Youth Programs Division, of the Bureau of Educational and Cultural Affairs announces an open competition for the Southeast Europe Youth Leadership Program. Public and private non-profit organizations meeting the provisions described in IRS regulation 26 CFR 1.501(c) may submit proposals to (A) recruit and select youth participants in Albania, Bosnia-Herzegovina, Kosovo, and Montenegro or (B) provide the youth with a U.S.-based project focused on civic education, leadership, and community activism, or (C) both. Organizations should apply to implement a grant for at least 24 of the 60 participants. Priority consideration will be given to organizations that can do both parts and/or can manage all of the Part A or the Part B activities for all participants.

Program Information

Overview

Secondary school students and adults (educators and/or community activists) from Albania, Bosnia and Herzegovina, Kosovo, and Montenegro will participate in four-to six-week-long projects in the United States with a focus on civic education and youth leadership. They will participate in workshops, community service activities, meetings with community leaders, and discussion groups. This project will serve the emerging priorities of leadership training and civic education for youth in Southeast Europe, as well as providing an introduction to the topics of citizen activism for a civil society, conflict resolution and intergroup dialogue.

The goals of the program are:

(1) To provide a civic education program that helps the participants understand civic participation and the rights and responsibilities of citizens in a democracy;

(2) To develop leadership skills among secondary school students appropriate to their needs; and

(3) To foster relationships among youth from different ethnic and religious groups based on their commonalities.

ECA expects to award approximately $294,000 for this program in grants to no more than three organizations. An organization may apply to administer ''Part A,'' ''Part B,'' or both. If necessary, ECA will then match selected organizations to administer the two parts of the program.

Part A: An organization may apply to administer the recruitment and selection of participants in Albania, Bosnia-Herzegovina, Kosovo, and/or Montenegro, and to conduct pre-departure orientations and follow-up debriefings.

Part B: An organization may apply to implement the U.S.-based program for the participants, including all programmatic and logistical arrangements for a group of 12 to 15 participants.

Part A and Part B: Organizations with a capacity and desire to administer both the in-country recruitment and selection of participants and the U.S. programming may apply to manage all components of the project.

Guidelines

Timing: Grants should begin on or about September 1, 2000, subject to the availability of funds. The grant period will be 15 months in duration. The projects will take place in either January 2001 or during the summer of 2001. Each project will be four to six weeks in length (January projects will be no more than four weeks).

Participants: The participants will be (1) approximately 50 students, aged 15 to 18, who have demonstrated leadership aptitude and an interest in community service, and (2) approximately ten adults who are teachers, administrators, and/or community leaders who work with youth. Participants will be proficient in English. The approximate number of participants (both students and educators) will be as follows: Albania—18; Bosnia-Herzegovina—6; Kosovo—18; Montenegro—18.

Criteria for selection of participants will be strong leadership skills, an interest in service to the community, strong academic and social skills, overall composure, and English proficiency. It is important that two or three participants attend or teach at the same school or live in the same community so that they have the support of others upon their return home.

Groups: The program will be divided into four or five teams in order to accommodate the proposed number of participants in reasonably sized groups and to offer diverse programming. Each group will be a mix of students and adult educators (*e.g.,* 10 students and 2 teachers or community leaders). Each applicant organization should apply to implement a grant for at least 24 individuals.

The size of each group will be around 12 to 15 participants. Ideally, each group should have participants representing at least three of the four geographic areas identified above, and the ethnic groups within them, as possible. These requirements may be adjusted depending on the grant recipient's resources for recruitment and selection, but the organizers must strive for the broadest regional and ethnic diversity. The Department of State and/or its overseas representatives reserve final approval of all selected delegations.

Part A—Recruitment and Selection

The grant recipient will manage the recruitment and selection of participants in cooperation with the Public Affairs Sections (PAS) at the U.S. Embassies or other USG representative offices in the region.

Part B—U.S. Program

Grants will be provided to U.S.-based nonprofit organizations for designing and implementing projects focusing on leadership development, civic education, community service, computer training, and conflict resolution. Each project will provide a sampling of topics for breadth, with a more complex exploration of one or two of these topics for depth. Some activities should be school-based, as feasible, and the project will involve as much interaction with American peers as possible. The projects may take place in up to three communities in order to offer the participants exposure to the variety of American life. Participants will stay with host families for at least two weeks of the project. Community contributions to the program will be expected.

Programs must comply with J–1 visa regulations. Please be sure to refer to the complete Solicitation Package—this RFP, the Project Objectives, Goals, and Implementation (POGI), and the Proposal Submission Instructions (PSI)—for further information.

Budget Guidelines

The total amount of funding available for this project is $294,000 and may be disbursed through grants to several organizations. The Bureau reserves the right to reduce, revise, or increase proposal budgets in accordance with the needs of the program and the availability of funds. Organizations with less than four years of experience in conducting international exchange programs will be eligible only for grants of $60,000 or less for Part A of this

competition, and are not eligible at all for Part B of this competition because the minimum grant will exceed $60,000.

Applicants must submit a comprehensive budget for the entire program. There must be a summary budget as well as breakdowns reflecting both administrative and program budgets. Applicants may provide separate sub-budgets for each program component, phase, location, or activity to provide clarification.

Please refer to the complete Solicitation Package. The POGI outlines allowable costs; the PSI offers complete budget guidelines and formatting instructions.

Announcement Title and Number

All correspondence with the Bureau concerning this RFP should reference the above title and number ECA/PE/C–00–56.

FOR FURTHER INFORMATION CONTACT: The Youth Programs Division, ECA/PE/C/PY, Room 568, U.S. Department of State, 301 4th Street, SW, Washington, DC 20547, telephone: (202) 619–6299, fax: (202) 619–5311; e-mail: clantz@pd.state.gov to request a Solicitation Package. The Solicitation Package contains detailed award criteria, required application forms, specific budget instructions, and standard guidelines for proposal preparation. Please specify Bureau Program Officer Carolyn Lantz on all other inquiries and correspondence.

Please read the complete **Federal Register** announcement before sending inquiries or submitting proposals. Once the RFP deadline has passed, Bureau staff may not discuss this competition with applicants until the proposal review process has been completed.

To Download a Solicitation Package Via Internet

The entire Solicitation Package may be downloaded from the Bureau's website at http://exchanges.state.gov/education/rfps. Please read all information before downloading.

Deadline for Proposals

All proposal copies must be received at the Bureau of Educational and Cultural Affairs by 5 p.m. Washington, DC time on Wednesday, June 21, 2000. Faxed documents will not be accepted at any time. Documents postmarked the due date but received on a later date will not be accepted. Each applicant must ensure that the proposals are received by the above deadline.

Applicants must follow all instructions in the Solicitation Package. The original and nine copies of the application should be sent to: U.S. Department of State, SA–44, Bureau of Educational and Cultural Affairs, Ref.: ECA/PE/C–00–56, Program Management, ECA/EX/PM, Room 336, 301 4th Street, SW, Washington, DC 20547.

Applicants must also submit the ''Executive Summary'' and ''Proposal Narrative'' sections of the proposal on a 3.5″ diskette, formatted for DOS. These documents must be provided in ASCII text (DOS) format with a maximum line length of 65 characters. The Bureau will transmit these files electronically to U.S. Department of State representatives overseas for their review.

Diversity, Freedom and Democracy Guidelines

Pursuant to the Bureau's authorizing legislation, programs must maintain a non-political character and should be balanced and representative of the diversity of American political, social, and cultural life. ''Diversity'' should be interpreted in the broadest sense and encompass differences including, but not limited to ethnicity, race, gender, religion, geographic location, socio-economic status, and physical challenges. Applicants are strongly encouraged to adhere to the advancement of this principle both in program administration and in program content. Please refer to the review criteria under the 'Support for Diversity' section for specific suggestions on incorporating diversity into the total proposal. Public Law 104–319 provides that ''in carrying out programs of educational and cultural exchange in countries whose people do not fully enjoy freedom and democracy,'' the Bureau ''shall take appropriate steps to provide opportunities for participation in such programs to human rights and democracy leaders of such countries.'' Proposals should reflect advancement of this goal in their program contents, to the full extent deemed feasible.

Year 2000 Compliance Requirement (Y2K Requirement)

The Year 2000 (Y2K) issue is a broad operational and accounting problem that could potentially prohibit organizations from processing information in accordance with Federal management and program specific requirements including data exchange with the Bureau. The inability to process information in accordance with Federal requirements could result in grantees' being required to return funds that have not been accounted for properly.

The Bureau therefore requires all organizations use Y2K compliant systems including hardware, software, and firmware. Systems must accurately process data and dates (calculating, comparing and sequencing) both before and after the beginning of the year 2000 and correctly adjust for leap years.

Additional information addressing the Y2K issue may be found at the General Services Administration's Office of Information Technology website at http://www.itpolicy.gsa.gov.

Review Process

The Bureau will acknowledge receipt of all proposals and will review them for technical eligibility. Proposals will be deemed ineligible if they do not fully adhere to the guidelines stated herein and in the Solicitation Package. All eligible proposals will be reviewed by the program office, as well as Department of State representatives overseas, where appropriate. Eligible proposals will be forwarded to panels of Bureau officers for advisory review. Proposals may also be reviewed by the Office of the Legal Adviser or by other Department elements. Final funding decisions are at the discretion of the Department of State's Under Secretary for Public Diplomacy and Public Affairs. Final technical authority for assistance awards (grants or cooperative agreements) resides with the Bureau's Grants Officer.

Authority

Overall grant making authority for this program is contained in the Mutual Educational and Cultural Exchange Act of 1961, Public Law 87–256, as amended, also known as the Fulbright-Hays Act. The purpose of the Act is ''to enable the Government of the United States to increase mutual understanding between the people of the United States and the people of other countries . . . ; to strengthen the ties which unite us with other nations by demonstrating the educational and cultural interests, developments, and achievements of the people of the United States and other nations . . . and thus to assist in the development of friendly, sympathetic and peaceful relations between the United States and the other countries of the world.'' The funding authority for the program above is provided through Support for Eastern European Democracy (SEED) legislation.

Section 566 of the FY 2000 Foreign Operations Authorization Act restricts most forms of assistance to countries, entities, and municipalities which are determined to harbor publicly indicted war criminals in the former Yugoslavia. On February 9, the Secretary [of State] issued a determination that the Republika Srpska and Serbia (excluding Kosovo) were subject to Section 566

restrictions. On March 15, the Secretary issued the determination . . . that waived FOAA restrictions for the RS and Serbia, but only for carefully targeted categories of assistance. Certain RS municipalities remain subject to a comprehensive assistance ban. Any assistance to them, except for emergency foods or medical or demining assistance, would require a separate waiver for specified activities, and must be justified on the basis that achievement of Dayton goals provide an overriding justification, *e.g.,* minority returns or concrete democratization objectives. The assistance for Serbia is carefully designed to be compatible with standing U.S. policy against providing significant assistance until there is a transition to democracy in Belgrade.

In the Republika Srpska, support for . . . USAID and State public diplomacy programs promoting democratization, reconciliation, and free and independent media . . . is exempt from these restrictions. The municipalities of Foca, Pale, and Prijedor are excluded from this waiver, because competent authorities have failed to take necessary and significant steps to apprehend and transfer war crimes indictees to the International Criminal Tribunal for the Former Yugoslavia. These municipalities will not be eligible for new U.S. assistance.

Notice

The terms and conditions published in this RFP are binding and may not be modified by any Bureau representative. Explanatory information provided by the Bureau that contradicts published language will not be binding. Issuance of the RFP does not constitute an award commitment on the part of the Government. The Bureau reserves the right to reduce, revise, or increase proposal budgets in accordance with the needs of the program and the availability of funds. Awards made will be subject to periodic reporting and evaluation requirements.

Notification

Final awards cannot be made until funds have been appropriated by Congress, allocated and committed through internal Bureau procedures.

Dated: April 26, 2000.

Evelyn S. Lieberman,

Under Secretary for Public Diplomacy and Public Affairs, U.S. Department of State.

[FR Doc. 00–11024 Filed 5–3–00; 8:45 am]

BILLING CODE 4710–11–P

OFFICE OF THE UNITED STATES TRADE REPRESENTATIVE

Generalized System of Preferences (GSP); Initiation of a Review to Consider the Designation of Nigeria as a Beneficiary Developing Country Under the GSP; Solicitation of Public Comments Relating to the Designation Criteria.

AGENCY: Office of the United States Trade Representative.

ACTION: Notice and solicitation of public comment with respect to the eligibility of Nigeria for the GSP program.

SUMMARY: This notice announces the initiation of a review to consider the designation of Nigeria as a beneficiary developing country under the GSP program and solicits public comment relating to the designation criteria.

FOR FURTHER INFORMATION CONTACT: GSP Subcommittee, Office of the United States Trade Representative, 600 17th Street, N.W., Room 518, Washington, D.C. 20508. The telephone number is (202) 395–6971.

SUPPLEMENTARY INFORMATION: The government of Nigeria has requested that it be granted eligibility for beneficiary status under the GSP program. The Trade Policy Staff Committee (TSPC) has initiated a review to determine if Nigeria should be designated as a beneficiary developing country under the GSP program. A country may not be designated a beneficiary developing country, absent a finding that such designation would be in the economic interests of the United States, if any one of several elements are found, including: the country is a party to an arrangement of countries and participates in any action pursuant to such arrangement, the effect of which is to withhold supplies of vital commodity resources from international trade or to raise the price of such commodities to an unreasonable level, and to cause serious disruption of the world economy; the provision by the country of preferential treatment to products of other developed countries which has a significant adverse effect on U.S. commerce; the expropriation by the country of U.S.-owned property without compensation; a failure by the country to enforce arbitral awards in favor of U.S. persons; the support by the country of international terrorism; or a failure by the country to take steps to protect internationally recognized worker rights. Other factors taken into account in determining whether a country will be designated a beneficiary developing country include: the extent to which the country has assured the United States that it will provide market access for U.S. goods; the extent to which the country has taken action to reduce trade-distorting investment practices and policies; and the extent to which the country is providing adequate and effective protection of intellectual property rights. The criteria for designation are set forth in full in section 502 of the Trade Act of 1974, as amended (19 U.S.C. 2461 *et seq.*).

Interested parties are invited to submit comments regarding the eligibility of Nigeria for designation as a GSP beneficiary developing country. Submission of comments must be made in English in 14 copies to the Chairman of the GSP Subcommittee, Trade Policy Staff Committee, and be received in Room 518 at 600 17th Street, N.W., Washington, D.C. 20508, no later than 5 p.m. on Monday, July 10th. Except for submission granted ''business confidential'' status pursuant to 15 CFR 2003.6, information and comments submitted regarding Nigeria will be subject to public inspection by appointment with the staff of the USTR Public Reading Room. For an appointment, please call Ms. Brenda Webb at 202/395–6186. If the document contains business confidential information, 14 copies of a nonconfidential version of the submission along with 14 copies of the confidential version must be submitted. In addition, the submission should be clearly marked ''confidential'' at the top and bottom of each page of the document. The version which does not contain business confidential information (the public version) should also be clearly marked at the top and bottom of each page (either ''public version'' or ''non-confidential'').

H.J. Rosenbaum,

Assistant U.S. Trade Representative.

[FR Doc. 00–11071 Filed 5–3–00; 8:45 am]

BILLING CODE 3190–01–M

DEPARTMENT OF TRANSPORTATION

Office of the Secretary

Aviation Proceedings, Agreements Filed During the Week Ending March 31, 2000

The following Agreements were filed with the Department of Transportation under the provisions of 49 Sections U.S.C. 412 and 414. Answers may be filed within 21 days after the filing of the application.

Docket Number: OST–2000–7161.

Date Filed: March 29, 2000.

Parties: Members of the International Air Transport Association.

Subject: PTC3 0424 dated 28 March 2000; Mail Vote 073—Resolution 063dd; TC3 Restricted Economy Class Fares from Japan to Korea.

Intended effective date: April 15, 2000.

Andrea M. Jenkins,

Federal Register Liaison.

[FR Doc. 00–11160 Filed 5–3–00; 8:45 am]

BILLING CODE 4910–62–P

DEPARTMENT OF TRANSPORTATION

Office of the Secretary

Aviation Proceedings, Agreements Filed During the Week Ending March 24, 2000

The following Agreements were filed with the Department of Transportation under the provisions of 49 U.S.C. Sections 412 and 414. Answers may be filed within 21 days after the filing of the application.

Docket Number: OST–2000–7120.

Date Filed: March 23, 2000.

Parties: Members of the International Air Transport Association.

Subject: PTC COMP 0594 dated 21 March 2000; Mail Vote 070—Resolution 010h; Special Passenger Currency Conversion Resolution—euro.

Intended effective date: 1 April 2000.

Docket Number: OST–2000–7133.

Date Filed: March 24, 2000.

Parties: Members of the International Air Transport Association.

Subject: PTC2 ME-AFR 0049 dated 24 March 2000; Mail Vote 072—TC2 Middle East-Africa Special Passenger; Amending Resolution.

Intended effective date: 1 April 2000.

Andrea M. Jenkins,

Federal Register Liaison.

[FR Doc. 00–11161 Filed 5–3–00; 8:45 am]

BILLING CODE 4910–62–P

DEPARTMENT OF TRANSPORTATION

Office of the Secretary

Notice of Applications for Certificates of Public Convenience and Necessity and Foreign Air Carrier Permits Filed Under Subpart Q During the Week Ending March 24, 2000

The following Applications for Certificates of Public Convenience and Necessity and Foreign Air Carrier Permits were filed under Subpart Q of the Department of Transportation's Procedural Regulations (see 14 CFR 302.1701 *et. seq.*). The due date for Answers, Conforming Applications, or Motions to modify Scope are set forth below for each application. Following the Answer period DOT may process the application by expedited procedures. Such procedures may consist of the adoption of a show-cause order, a tentative order, or in appropriate cases a final order without further proceedings.

Docket Number: OST–2000–7102.

Date Filed: March 20, 2000.

Due Date for Answers, Conforming Applications, or Motion to Modify Scope: April 17, 2000.

Description: Application of Alaska Scenic Air, LLC d/b/a A Ball Air pursuant to 49 U.S.C. section 41102 and Subpart Q, applies for a Certificate of Public Convenience and Necessity for an indefinite term to perform scheduled, interstate transportation of persons, property and mail.

Docket Number: OST–2000–7121.

Date Filed: March 23, 2000.

Due Date for Answers, Conforming Applications, or Motion to Modify Scope: April 20, 2000.

Description: Application of AOM-Minerve, S.A. pursuant to 49 U.S.C. section 41302, and Subpart Q, requests an amendment to its foreign air carrier permit to allow it: (1) To engage in scheduled foreign air transportation of persons, property and mail from points behind France via France to a point or points in the United States and beyond to two points in the Western Hemisphere and points in the French Territories in the Pacific; (2) to engage in scheduled foreign air transportation of persons, property and mail from points behind French Polynesia via French Polynesia and intermediate points to a point or point in the United States and beyond; (3) to the extent necessary, to commingle traffic moving in air transportation between the United States and France or French Polynesia and traffic not in air transportation; (4) to engage in charter foreign air transportation of persons, property and mail between any point or points in France and any point or points in the United States; and (5) to engage in other charter foreign air transportation as may be authorized pursuant to the department's regulations.

Docket Number: OST–2000–7128.

Date Filed: March 23, 2000.

Due Date for Answers, Conforming Applications, or Motion to Modify Scope: April 20, 2000.

Description: Notice of Sun Pacific International, Inc. pursuant to 14 CFR section 204.7(b), of its intent to resume charter domestic and foreign air transportation of persons, property and mail, subsequent to restoration of effective Part 121 certificate authority by the Federal Aviation Administration. Sun Pacific requests that the Department grant a waiver of the 45-day advance filing requirement of this rule; the carrier expects restoration of its FAA certificate authority shortly, and it is essential that it be able to resume operations as soon thereafter as possible.

Andrea M. Jenkins,

Federal Register Liaison.

[FR Doc. 00–11159 Filed 5–3–00; 8:45 am]

BILLING CODE 4910–62–P

DEPARTMENT OF TRANSPORTATION

Coast Guard

[USCG–2000–6847]

Information Collection Under Review by the Office of Management and Budget (OMB): 2115–0053, 2115–0025, and 2115–0607

AGENCY: Coast Guard, DOT.

ACTION: Request for comments.

SUMMARY: In compliance with the Paperwork Reduction Act of 1995, this request for comments announces that the Coast Guard has forwarded the three Information Collection Reports (ICRs) abstracted below to OMB for review and comment. Our ICRs describe the information that we seek to collect from the public. Review and comment by OMB ensure that we impose only paperwork burdens commensurate with our performance of duties.

DATES: Please submit comments on or before June 5, 2000.

ADDRESSES: Please send comments to both (1) the Docket Management System (DMS), U.S. Department of Transportation (DOT), room PL–401, 400 Seventh Street SW, Washington, DC 20590–0001, and (2) the Office of Information and Regulatory Affairs (OIRA), Office of Management and Budget (OMB), 725 17th Street NW, Washington, DC 20503, to the attention of the Desk Officer for the USCG.

Copies of the complete ICRs are available for inspection and copying in public docket USCG–2000–6847 of the Docket Management Facility between 10 a.m. and 5 p.m., Monday through Friday, except Federal holidays; for inspection and printing on the internet at *http://dms.dot.gov;* and for inspection from the Commandant (G–SII–2), U.S. Coast Guard, room 6106, 2100 Second Street SW, Washington, DC, between 10 a.m. and 4 p.m., Monday through Friday, except Federal holidays.

FOR FURTHER INFORMATION CONTACT: Barbara Davis, Office of Information

Management, 202–267–2326, for questions on this document; Dorothy Walker, Chief, Documentary Services Division, U.S. Department of Transportation, 202–366–9330, for questions on the docket.

SUPPLEMENTARY INFORMATION:

Regulatory History

This request constitutes the 30-day notice required by OMB. The Coast Guard has already published [65 FR 7094 (February 11, 2000)] the 60-day notice required by OMB. That request elicited the following comments.

The comment concerned ICR 2115–0025—Oil Record Book for Ships. It suggested the following changes to the Oil Record Book for Ships: (1) ''On page 13 the instructions say to 'circle one' and then present the choice of cargo/ballast of machinery space. On the remaining pages there is no choice given.'' (2) ''Under the code and item numbers for tankers, the instructions under the letter K lists the operations to be documented when discharging clean ballast. These operations are written to confirm [sic] to Marpol regulations where clean ballast does not have to be monitored. Under 33 CFR 157.43 clean ballast [sic] discharges must go thru the cargo monitor. It would follow that a listed operation such as H 37 '[sic] Was the discharge monitoring and control system in operation' should be included under H.''

The Coast Guard has reviewed and concurs with the first suggested change and will make the corrections when the book is revised. While the second suggestion is a good one, the Coast Guard will consider it when it reviews the book for the next revision. On April 6, 2000, we replied to the commentor and sent copies to OMB.

Request for Comments

The Coast Guard invites comments on the proposed collections of information to determine whether the collections are necessary for the proper performance of the functions of the Department. In particular, the Coast Guard would appreciate comments addressing: (1) The practical utility of the collections; (2) the accuracy of the Department's estimated burden of the collections; (3) ways to enhance the quality, utility, and clarity of the information that is the subject of the collections; and (4) ways to minimize the burden of collections on respondents, including the use of automated collection techniques or other forms of information technology.

Comments, to DMS or OIRA, must contain the OMB Control Numbers of all ICRs addressed. Comments to DMS must contain the docket number of this request, USCG–2000–6847. Comments to OIRA are best assured of having their full effect if OIRA receives them 30 or fewer days after the publication of this request.

Information Collection Requests

1. *Title:* Request for Designation and Exemption of Oceanographic Research Vessels.

OMB Control Number: 2115–0053.

Type of Request: Extension of currently approved collection.

Affected Public: Owner or operator of vessel.

Form(s): N/A.

Abstract: This information is necessary to ensure that a vessel qualifies for the designation.

Annual Estimated Burden Hours: The estimated burden is 29 hours annually.

2. *Title:* Oil Record Book for Ships.

OMB Control Number: 2115–0025.

Type of Request: Extension of a currently approved collection.

Affected Public: Operators of vessels.

Forms: N/A.

Abstract: The Act to Prevent Pollution from Ships (APPS) and the International Convention for Prevention of Pollution from Ships, 1973, as modified by the 1978 Protocol relating thereto (MARPOL 73/78), require that information about oil (cargo or fuel) be entered into an Oil Record Book (CG–4602A). The requirement appears at 33 CFR 151.25.

Annual Estimated Burden Hours: The estimated burden is 35,828 hours annually.

3. *Title:* Vessel Identification System.

OMB Control Number: 2115–0607.

Type of Request: Extension of a currently approved collection.

Affected Public: Governments of States and territories.

Forms: N/A.

Abstract: The Secretary of Transportation must establish a nationwide vessel-identification system (VIS) and centralize certain vessel-documentation functions. VIS provides participating States and territories with access to their own data on numbered vessels. Participation in VIS is voluntary.

Annual Estimated Burden Hours: The estimated burden is 5,697 hours annually.

Forms: N/A.

Abstract: To protect marine workers from exposure to toxic Benzene vapor, the Coast Guard implemented 46 CFR part 197, subpart C.

Annual Estimated Burden Hours: The estimated burden is 5,697 hours annually.

Dated: April 19, 2000.

Daniel F. Sheehan,

Director of Information and Technology.

[FR Doc. 00–11157 Filed 5–3–00; 8:45 am]

BILLING CODE 4910–15–P

DEPARTMENT OF TRANSPORTATION

Federal Aviation Administration

[Docket No. 29967]

Airport Privatization Pilot Program; Correction

AGENCY: Federal Aviation Administration (FAA), DOT.

ACTION: Notice of acceptance for review: Preliminary application for Rafael Hernandex Airport, Aguadilla, Puerto Rico; correction.

SUMMARY: This document contains a correction to a notice of acceptance for review. The Federal Aviation Administration (FAA) completed its review of the Rafael Hernandez Airport (BQN) preliminary application for participation in the airport privatization pilot program. The preliminary application was accepted for review, with a filing date of December 20, 1999.

FOR FURTHER INFORMATION CONTACT: Kevin C. Willis (202) 267–8741.

Correction of Publication

In Fr Doc. 00–3823, beginning on page 9304 in the **Federal Register** issue of February 24, 2000, make the following corrections:

1. On page 9304, in column 3, in the heading section, beginning on line 3, insert the docket number to read, ''[Docket No. 29967]''.

2. On page 9305, in column 1, on the fourth line, immediately following ''(AGC–200)'', insert, ''Docket No. ''[29967]''.

Issued in Washington, DC on April 28, 2000.

Donald P. Byrne,

Assistant Chief Counsel, Regulations Division.

[FR Doc. 00–11166 Filed 5–3–00; 8:45 am]

BILLING CODE 4910–13–M

DEPARTMENT OF TRANSPORTATION

Office of the Secretary

Notice of Applications for Certificates of Public Convenience and Necessity and Foreign Air Carrier Permits Filed Under Subpart Q During the Week Ending March 31, 2000

The following Applications for Certificates of Public Convenience and

Necessity and Foreign Air Carrier Permits were filed under Subpart Q of the Department of Transportation's Procedural Regulations (See 14 CFR 302.1701 et. seq.). The due date for Answers, Conforming Applications, or Motions to modify Scope are set forth below for each application. Following the Answer period DOT may process the application by expedited procedures. Such procedures may consist of the adoption of a show-cause order, a tentative order, or in appropriate cases a final order without further proceedings.

Docket Number: OST–2000–7141.

Date Filed: March 27, 2000.

Due Date for Answers, Conforming Applications, or Motion to Modify Scope: April 24, 2000.

Description: Application of Florida West International Airways, Inc. (''FWIA'') pursuant to 49 U.S.C. Section 41102 and Part 201 and Subpart Q, requests issuance of a new certificate of public convenience and necessity, or an amendment to its existing international certificate, authorizing FWIA to engage in scheduled foreign air transportation of property and mail between any point or points in the United States, via intermediate points, in both directions, to a point or points in Colombia, and beyond Colombia to points, in the Western Hemisphere. FWIA also requests authority to integrate this certificate authority with all services FWIA is otherwise authorized to conduct pursuant to its exemption and certificate authority and consistent with applicable agreements between the U.S. and foreign countries.

Docket Number: OST–2000–7143.

Date Filed: March 27, 2000.

Due Date for Answers, Conforming Applications, or Motion to Modify Scope: April 17, 2000.

Description: Application of Continental Micronesia, Inc. pursuant to 49 U.S.C. Section 41102 and Subpart B, applies to renew its Segment 9 Saipan/Guam-Sapporo/Sendai, Japan) and Segment 13 (Honolulu-Tokyo, Japan) Route 171 certificate authority for a period of no less than five Years.

Docket Number: OST–2000–7152.

Date Filed: March 28, 2000.

Due Date for Answers, Conforming Applications, or Motion to Modify Scope: April 18, 2000.

Description: Application of Farwest Airlines, LLC (''Far-west'') pursuant to 49 U.S.C. Section 41738 and Subpart B, requests authority to operate scheduled passenger service as a commuter air carrier.

Docket Number: OST–2000–7168.

Date Filed: March 31, 2000.

Due Date for Answers, Conforming Applications, or Motion to Modify Scope: April 21, 2000.

Description: Application of Tie Aviation, Inc. d/b/a Trans International Express (''Tie'') pursuant to 49 U.S.C Section 41102, Part 201 and Subpart Q, requests that the Department issue it a Certificate of Public Convenience and Necessity to authorize foreign charter air transportation of property and mail.

Andrea M. Jenkins,

Federal Register Liaison.

[FR Doc. 00–11158 Filed 5–3–00; 8:45 am]

BILLING CODE 4910–62–P

DEPARTMENT OF TRANSPORTATION

Federal Railroad Administration

[Docket No. RSAC–96–1, Notice No. 21]

Railroad Safety Advisory Committee; Notice of Meeting

AGENCY: Federal Railroad Administration (FRA), Department of Transportation (DOT).

ACTION: Notice of Railroad Safety Advisory Committee (''RSAC'') meeting.

SUMMARY: FRA announces the next meeting of the RSAC, a Federal Advisory Committee that develops railroad safety regulations through a consensus process. The meeting will address a wide range of topics, including possible adoption of specific recommendations for regulatory action.

DATES: The meeting of the RSAC is scheduled to commence at 9:30 a.m. and conclude at 3:00 p.m. on Friday, May 19, 2000.

ADDRESSES: The meeting of the RSAC will be held at The Madison Hotel, 1177 Fifteenth Street NW, Washington, DC, (202) 862–1600. The meeting is open to the public on a first-come, first-served basis and is accessible to individuals with disabilities. Sign and oral interpretation can be made available if requested 10 calendar days before the meeting.

FOR FURTHER INFORMATION CONTACT: Trish Paolella, RSAC Coordinator, FRA, 1120 Vermont Avenue, NW, Stop 25, Washington, D.C. 20590, (202) 493–6212 or Grady Cothen, Deputy Associate Administrator for Safety Standards and Program Development, FRA, 1120 Vermont Avenue, NW, Stop 25, Washington, D.C. 20590, (202) 493–6302.

SUPPLEMENTARY INFORMATION: Pursuant to section 10(a)(2) of the Federal Advisory Committee Act (Pub. L. 92–463), FRA is giving notice of a meeting of the Railroad Safety Advisory Committee (''RSAC''). The meeting is scheduled to begin at 9:30 a.m. and conclude at 3:00 p.m. on Friday, May 19, 2000. The meeting of the RSAC will be held at The Madison Hotel, 1177 Fifteenth Street NW, Washington, DC, (202) 862–1600. All times noted are Eastern Standard Time.

RSAC was established to provide advice and recommendations to the FRA on railroad safety matters. The Committee consists of 48 individual representatives, drawn from among 27 organizations representing various rail industry perspectives, and 2 associate non-voting representatives from the agencies with railroad safety regulatory responsibility in Canada and Mexico. Staff of the National Transportation Safety Board and Federal Transit Administration also participate in an advisory capacity.

The RSAC will be briefed on the current status of activities of RSAC working groups and task forces responsible for carrying out tasks the RSAC has accepted involving locomotive cab working conditions, positive train control, the definition of reportable ''train accident'', roadway maintenance equipment safety standards, and incorporation of a provision for gage restraint measurement within the Track Safety Standards.

An informational briefing concerning a technical conference about remote control locomotives will be presented.

Please refer to the notice published in the **Federal Register** on March 11, 1996 (61 FR 9740) for more information about the RSAC.

Issued in Washington, DC on May 1, 2000.

George Gavalla,

Associate Administrator for Safety.

[FR Doc. 00–11105 Filed 5–3–00; 8:45 am]

BILLING CODE 4910–06–P

DEPARTMENT OF TRANSPORTATION

National Highway Traffic Safety Administration

[Docket No. NHTSA–99–6632; Notice 2]

Ford Motor Company, Grant of Application for Decision of Inconsequential Noncompliance

Ford Motor Company (Ford) has determined that certain 2000 model year Ford Focus vehicles it produced are not in full compliance with 49 CFR 571.135, Federal Motor Vehicle Safety Standard (FMVSS) No. 135, ''Light Vehicle Brake Systems,'' and has filed an appropriate report pursuant to 49 CFR part 573,

''Defect and Noncompliance Reports.'' Ford has also applied to be exempted from the notification and remedy requirements of 49 U.S.C. Chapter 301—''Motor Vehicle Safety'' on the basis that the noncompliance is inconsequential to motor vehicle safety.

Notice of receipt of an application was published, with a 30-day comment period, on December 20, 1999, in the **Federal Register** (64 FR 71181). NHTSA received no comments on this application during the comment period.

Paragraph S5.4.3(b) of FMVSS No. 135 states that the brake fluid warning statement lettering shall be ''located so as to be visible by direct view, either on or within 100 mm (3.94 inches) of the brake fluid reservoir filler plug or cap.'' Ford manufactured approximately 11,000 model year 2000 Focus vehicles that may not comply with the requirement that the brake fluid label be located within 100 mm of the reservoir filler plug or cap. All Ford Focus vehicles that are potentially in noncompliance with this requirement were manufactured between October 7, 1999 and October 20, 1999. According to Ford, the location of the labels containing the required lettering was not controlled and, while clearly visible by direct view, some labels were located such that the lettering is 120 to 130 mm distance from the reservoir filler cap. Ford believes this condition to be inconsequential to motor vehicle safety.

Ford stated in its application that the noncompliance was precipitated by a production change. Prior to the production change, the labels were affixed by Ford during vehicle assembly. The production change resulted in the brake fluid warning labels being affixed by the supplier of the vehicle component on which the labels are mounted. The supplier was not aware of the importance of the positioning of the brake fluid warning label on the vehicle component. According to Ford, the manufacturing process has been extensively reviewed, the cause of the noncompliance has been isolated, and changes in the manufacturing process have been instituted to prevent any future occurrence of this noncompliance.

Ford's petition included a brake fluid warning label of the type affixed to the 2000 model year Focus. Ford also provided photographs of an engine compartment in which the label is properly located (approximately 75 mm from the brake fluid reservoir cap) and an engine compartment with an improperly located label. Ford supported its claim that the noncompliance is inconsequential by stating that the subject labels meet all other federal requirements, and the location of these labels does not present reasonably anticipated risks to motor vehicle safety.

The agency believes that the true measure of inconsequentiality to motor vehicle safety is the effect of the noncompliance on the availability of the brake fluid warning labels for review by the vehicle operators and service technicians. Ford has supplied the agency with photographs which indicate that, although the brake fluid warning labels are not located within the specified distance from the brake fluid reservoir filler cap, the labels are plainly visible by direct view and in close proximity to the reservoir filler cap. In this instance, the agency does not believe the noncompliance is a threat to motor vehicle safety.

In consideration of the foregoing, NHTSA has decided that the applicant has met its burden of persuasion that the noncompliance it describes is inconsequential to safety. Accordingly, its application is granted, and the applicant is exempted from providing the notification of the noncompliance that would be required by 49 U.S.C. 30118, and from remedying the noncompliance, as would be required by 49 U.S.C. 30120.

(49 U.S.C. 30118, 30120; delegations of authority at 49 CFR 1.50 and 501.8)

Issued on: April 28, 2000.

Stephen R. Kratzke,

Associate Administrator for Safety Performance Standards.

[FR Doc. 00–11167 Filed 5–3–00; 8:45 am]

BILLING CODE 4910–59–P

DEPARTMENT OF TRANSPORTATION

Surface Transportation Board

[STB Finance Docket No. 33782]

Entergy Arkansas and Entergy Rail—Construction and Operation Exemption—White Bluff to Pine Bluff, AR

AGENCY: Surface Transportation Board.

ACTION: Notice of exemption.

SUMMARY: Under 49 U.S.C. 10502, the Board conditionally exempts from the prior approval requirements of 49 U.S.C. 10901 the construction and operation by Entergy Rail of an 8.6-mile line of railroad from White Bluff to Pine Bluff, AR.

DATES: The exemption will not become effective until the environmental review process is completed. The Board will then issue a further decision addressing the environmental matters and establishing an exemption effective date, if appropriate. Petitions to reopen must be filed by May 24, 2000.

ADDRESSES: Send pleadings, referring to STB Finance Docket No. 33782, to: (1) Surface Transportation Board, Office of the Secretary, Case Control Unit, 1925 K Street, N.W., Washington, DC 20423–0001; and (2) John R. Molm, Troutman Sanders LLP, 1300 I Street, N.W., Suite 500 East, Washington, DC 20005–3314.

FOR FURTHER INFORMATION CONTACT: Julia M. Farr, (202) 565–1613. [TDD for the hearing impaired: 1–800–877–8339.]

SUPPLEMENTARY INFORMATION: Additional information is contained in the Board's decision available on our website at ''WWW.STB.DOT.GOV.''

Decided: April 25, 2000.

By the Board, Chairman Morgan, Vice Chairman Burkes, and Commissioner Clyburn.

Vernon A. Williams,

Secretary.

[FR Doc. 00–10784 Filed 5–3–00; 8:45 am]

BILLING CODE 4915–00–P

DEPARTMENT OF TRANSPORTATION

Surface Transportation Board

[STB Finance Docket No. 33867]

Heart of Georgia Railroad, Inc.—Acquisition and Operation Exemption—State of Georgia and Georgia Southwestern Railroad, Inc.

Heart of Georgia Railroad, Inc. (HOG), a noncarrier, has filed a verified notice of exemption under 49 CFR 1150.31 to acquire and/or operate four contiguous sections of rail line totaling 177.76 miles between Vidalia, GA, and Mahrt, AL, owned by the State of Georgia, Department of Transportation (State), and the Georgia Southwestern Railroad, Inc. (GSWR), as follows: (1) HOG will lease (by assignment of GSWR's rights under a lease with State) State's segment of the rail line between milepost 577.85, at or near Vidalia, and milepost 644.00, at Rochelle, GA, and the .48-mile Abbeville Wye Track, at Abbeville, GA; (2) HOG will acquire the exclusive rail freight easement over GSWR's segment between milepost 644.00, at Rochelle, and milepost 713.00, at or near Preston, GA; (3) HOG will lease State's segment between milepost 713.00, at or near Preston, and milepost 753.00, at Omaha, GA; and (4) HOG will acquire the exclusive rail freight easement over GSWR's segment between milepost 753.00, at Omaha, and milepost 755.13, at Mahrt, AL. All of the segments will be operated by HOG.

The transaction was expected to be consummated shortly after April 26, 2000, the effective date of the exemption (7 days after the exemption was filed).

If the verified notice contains false or misleading information, the exemption is void *ab initio*. Petitions to reopen the proceeding to revoke the exemption under 49 U.S.C. 10502(d) may be filed at any time. The filing of a petition to revoke will not automatically stay the transaction.

An original and 10 copies of all pleadings, referring to STB Finance Docket No. 33867, must be filed with the Surface Transportation Board, Office of the Secretary, Case Control Unit, 1925 K Street, N.W., Washington, DC 20423–0001. In addition, a copy of each pleading must be served on Thomas F. McFarland, Jr., Esq., McFarland & Herman, 20 North Wacker Drive, Suite 1330, Chicago, IL 60606–2902.

Board decisions and notices are available on our website at ''WWW.STB.DOT.GOV.''

Decided: April 27, 2000.

By the Board, David M. Konschnik, Director, Office of Proceedings.

Vernon A. Williams,

Secretary.

[FR Doc. 00–11180 Filed 5–3–00; 8:45 am]

BILLING CODE 4915–00–P

DEPARTMENT OF VETERANS AFFAIRS

[OMB Control No. 2900–0042]

Proposed Information Collection Activity: Proposed Collection; Comment Request

AGENCY: Board of Veterans' Appeals, Department of Veterans Affairs.

ACTION: Notice.

SUMMARY: The Board of Veterans' Appeals (BVA), Department of Veterans Affairs (VA), is announcing an opportunity for public comment on the proposed collection of certain information by the agency. Under the Paperwork Reduction Act (PRA) of 1995, Federal agencies are required to publish notice in the **Federal Register** concerning each proposed collection of information, including each proposed extension of a previously approved collection, and allow 60 days for public comment in response to the notice. This notice solicits comments for information needed for veteran's service organization to present argument before the Board on behalf of appellants who the service organizations represent.

DATES: Written comments and recommendations on the proposed collection of information should be received on or before July 3, 2000.

ADDRESSES: Submit written comments on the collection of information to Sue Hamlin, Board of Veterans' Appeals (01), Department of Veterans Affairs, 810 Vermont Avenue, NW, Washington, DC 20420. Please refer to ''OMB Control No. 2900–0042'' in any correspondence.

FOR FURTHER INFORMATION CONTACT: Sue Hamlin at (202) 565–5686 or FAX (202) 565–4064.

SUPPLEMENTARY INFORMATION: Under the PRA of 1995 (Public Law 104–13; 44 U.S.C., 3501–3520), Federal agencies must obtain approval from the Office of Management and Budget (OMB) for each collection of information they conduct or sponsor. This request for comment is being made pursuant to Section 3506(c)(2)(A) of the PRA.

With respect to the following collection of information, BVA invites comments on: (1) whether the proposed collection of information is necessary for the proper performance of BVA's functions, including whether the information will have practical utility; (2) the accuracy of BVA's estimate of the burden of the proposed collection of information; (3) ways to enhance the quality, utility, and clarity of the information to be collected; and (4) ways to minimize the burden of the collection of information on respondents, including through the use of automated collection techniques or the use of other forms of information technology.

Title: Statement of Accredited Representative in Appealed Case, VA Form 646.

OMB Control Number: 2900–0042.

Type of Review: Extension of a currently approved collection.

Abstract: The form is used by accredited veterans' service organization representatives to present their argument to the Board on behalf of appellants of whom the service organizations represent. It facilitates appellants' exercise of their representation rights. The legal and factual arguments presented on the form are considered and addressed by the Board in making decisions on appeals. The form is also designed to solicit enough identifying data to enable VA to identify the particular case to which the statement pertains so that it may be properly considered and filed when received by VA. It aids the Board in assuring that rights to representation have been honored by establishing that the record has been made available to the representative for review and presentation of argument.

Affected Public: Not-for-profit institutions.

Estimated Annual Burden: 32,895 hours.

Estimated Average Burden Per Respondent: 60 minutes.

Frequency of Response: On occasion.

Estimated Number of Respondents: 32,895.

Dated: April 7, 2000.

By direction of the Secretary.

Donald L. Neilson,

Director, Information Management Service.

[FR Doc. 00–11083 Filed 5–3–00; 8:45 am]

BILLING CODE 8320–01–P

DEPARTMENT OF VETERANS AFFAIRS

[OMB Control No. 2900–0078]

Proposed Information Collection Activity: Proposed Collection; Comment Request

AGENCY: Office of Information and Technology, Department of Veterans Affairs.

ACTION: Notice.

SUMMARY: The Office of Information and Technology (IT), Department of Veterans Affairs (VA), is announcing an opportunity for public comment on the proposed collection of certain information by the agency. Under the Paperwork Reduction Act (PRA) of 1995, Federal agencies are required to publish notice in the **Federal Register** concerning each proposed collection of information, including each proposed extension of a previously approved collection, and allow 60 days for public comment in response to the notice. This notice solicits comments for information needed to obtain additional data to assist in identifying a specific veteran.

DATES: Written comments and recommendations on the proposed collection of information should be received on or before July 3, 2000.

ADDRESSES: Submit written comments on the collection of information to Barbara Epps (045A4), Department of Veterans Affairs, 810 Vermont Avenue, NW, Washington, DC 20420. Please refer to ''OMB Control No. 900–0078'' in any correspondence.

FOR FURTHER INFORMATION CONTACT: Barbara Epps at (202) 273–8013 or FAX (202) 273–5981.

SUPPLEMENTARY INFORMATION: Under the PRA of 1995 (Public Law 104–13; 44 U.S.C., 3501–3520), Federal agencies must obtain approval from the Office of Management and Budget (OMB) for each collection of information they conduct or sponsor. This request for comment is

being made pursuant to Section 3506(c)(2)(A) of the PRA.

With respect to the following collection of information, IT invites comments on: (1) whether the proposed collection of information is necessary for the proper performance of IT's functions, including whether the information will have practical utility; (2) the accuracy of IT's estimate of the burden of the proposed collection of information; (3) ways to enhance the quality, utility, and clarity of the information to be collected; and (4) ways to minimize the burden of the collection of information on respondents, including through the use of automated collection techniques or the use of other forms of information technology.

Title: Request to Correspondent for Identifying Information, VA Form Letter 70–2.

OMB Control Number: 2900–0078.

Type of Review: Extension of a previously approved collection.

Abstract: The form letter is used to obtain additional information from a correspondent when the incoming correspondence does not provide sufficient information to identify a veteran. VA personnel use the information to identify the veteran, determine the location of a specific file, and to accomplish the action requested by the correspondent such as; process a benefit claim or file material in the individual's claims folder. Completion of the form is voluntary and failure to furnish the requested information has no adverse effect on either the veteran or the correspondent.

Affected Public: Individuals or households.

Estimated Annual Burden: 3,750 hours.

Estimated Average Burden Per Respondent: 5 minutes.

Frequency of Response: On occasion.

Estimated Number of Respondents: 45,000.

Dated: April 13, 2000.

Donald L. Neilson,

Director, Information Management Service.

[FR Doc. 00–11084 Filed 5–3–00; 8:45 am]

BILLING CODE 8320–01–P

DEPARTMENT OF VETERANS AFFAIRS

[OMB Control No. 2900–0466]

Proposed Information Collection Activity: Proposed Collection; Comment Request

AGENCY: Veterans Benefits Administration, Department of Veterans Affairs.

ACTION: Notice.

SUMMARY: The Veterans Benefits Administration (VBA), Department of Veterans Affairs (VA), is announcing an opportunity for public comment on the proposed collection of certain information by the agency. Under the Paperwork Reduction Act (PRA) of 1995, Federal agencies are required to publish notice in the **Federal Register** concerning each proposed collection of information, including each proposed reinstatement, with change, of a previously approved collection for which approval has expired, and allow 60 days for public comment in response to the notice. This notice solicits comments for information needed to verify beneficiaries' deposit remaining at a financial institution against a fiduciary's accounting.

DATES: Written comments and recommendations on the proposed collection of information should be received on or before July 3, 2000.

ADDRESSES: Submit written comments on the collection of information to Nancy J. Kessinger, Veterans Benefits Administration (20S52), Department of Veterans Affairs, 810 Vermont Avenue, NW, Washington, DC 20420. Please refer to ''OMB Control No. 2900–0466'' in any correspondence.

FOR FURTHER INFORMATION CONTACT: Nancy J. Kessinger at (202) 273–7079 or FAX (202) 275–5947.

SUPPLEMENTARY INFORMATION: Under the PRA of 1995 (Public Law 104–13; 44 U.S.C., 3501–3520), Federal agencies must obtain approval from the Office of Management and Budget (OMB) for each collection of information they conduct or sponsor. This request for comment is being made pursuant to Section 3506(c)(2)(A) of the PRA.

With respect to the following collection of information, VBA invites comments on: (1) whether the proposed collection of information is necessary for the proper performance of VBA's functions, including whether the information will have practical utility; (2) the accuracy of VBA's estimate of the burden of the proposed collection of information; (3) ways to enhance the quality, utility, and clarity of the information to be collected; and (4) ways to minimize the burden of the collection of information on respondents, including through the use of automated collection techniques or the use of other forms of information technology.

Title: Certificate of Balance on Deposit and Authorization to Disclose Financial Records, VA Form 27–4718a.

OMB Control Number: 2900–0466.

Type of Review: Reinstatement, with change, of a previously approved collection for which approval has expired.

Abstract: Fiduciaries are required to obtain certifications that the balances remaining on deposit in financial institutions as shown on accountings are correct. The form is completed by a certifying official at a financial institution who must also affix the financial seal or stamp. An Estate analyst reviews the information provided on this form when auditing accounting to determine the veracity of the information supplied by fiduciaries. The purpose is to prevent fiduciaries from supplying false certification, embezzling funds, and possibly prevent and/or identify fraud, waste, and abuse of government funds paid to fiduciaries on behalf of VA beneficiaries.

Affected Public: Individuals or Households, Business or Other for-Profit, Not for Profit Institutions, and State, Local or Tribal Government.

Estimated Annual Burden: 1,185 hours.

Estimated Average Burden Per Respondent: 3 minutes.

Frequency of Response: Annually.

Estimated Number of Respondents: 23,700.

Dated: April 24, 2000.

Donald L. Neilson,

Director, Information Management Service.

[FR Doc. 00–11085 Filed 5–3–00; 8:45 am]

BILLING CODE 8320–01–P

DEPARTMENT OF VETERANS AFFAIRS

Privacy Act of 1974; Report of Amended Matching Program

AGENCY: Department of Veterans Affairs.

ACTION: Notice.

SUMMARY: Notice is hereby given that the Department of Veterans Affairs (VA) intends to conduct a recurring computer program matching Railroad Retirement Board (RRB) benefit recipient records with VA pension and parents' dependency and indemnity compensation (DIC) records.

The goal of this match is to compare income status as reported to VA with benefit records maintained by RRB.

VA plans to match records of veterans and surviving spouses and children who receive pension, and parents who receive DIC, with Railroad Retirement benefit records maintained by RRB. The match with RRB will provide VA with data from the RRB Research File of Retirement and Survivor Benefits.

VA will use this information to update the master records of VA beneficiaries receiving income dependent benefits and to adjust VA benefit payments as prescribed by law. Otherwise, information about a VA beneficiary's income is obtained only from reporting by the beneficiary. The proposed matching program will enable VA to ensure accurate reporting of income.

Records To Be Matched

VA records involved in the match are VA's system of records, Compensation, Pension, Education with Rehabilitation Records—VA (58 VA 21/22) first published at 41 FR 9294, March 3, 1976, and last amended at 63 FR 37941 (July 14, 1998). The RRB records consist of information from the Research File of Retirement and Survivor Benefits, System of Records RRB 225 and RRB 26 contained in the Privacy Act Issuances, 1991 compilation, Volume V, Pages 518–519. In accordance with Title 5 U.S.C. subsection 552a(o)(2) and (r), copies of the agreement are being sent to both Houses of Congress and to the Office of Management and Budget.

This notice is provided in accordance with provisions of the Privacy Act of 1974 as amended by Public Law 100–503.

DATES: The match will start no sooner than June 5, 2000, and end not more than 18 months after the agreement is properly implemented by the parties. The involved agencies' Data Integrity Boards (DIBs) may extend this match for 12 months provided the agencies certify to their DIBs within three months of the ending date of the original match that the matching program will be conducted without change and that it has been conducted in compliance with the original matching program.

ADDRESSES: Interested individuals may submit written comments to the Director, Office of Regulations Management (02D), Department of Veterans Affairs, 810 Vermont Ave., NW, Room 1154, Washington, DC 20420. Comments will be available for public inspection at the above address in the Office of Regulations Management, Room 1158, between 8 a.m. and 4:30 p.m., Monday through Friday, except holidays.

FOR FURTHER INFORMATION CONTACT: Paul Trowbridge (212A), (202) 273–7218.

SUPPLEMENTARY INFORMATION: This information is required by Title 5 U.S.C. subsection 552b(e)(12), the Privacy Act of 1974. A copy of this notice has been provided to both Houses of Congress and OMB.

Approved: April 25, 2000.

Togo D. West, Jr.,

Secretary of Veterans Affairs.

[FR Doc. 00–11087 Filed 5–3–00; 8:45 am]

BILLING CODE 8320–01–M

DEPARTMENT OF VETERANS AFFAIRS

Privacy Act of 1974; Amendment of Systems Notice; Appointment of New System Manager

AGENCY: Department of Veterans Affairs.

ACTION: Notice; amendment of systems of records.

SUMMARY: As required by the Privacy Act of 1974, 5 U.S.C. 552(a)(e), notice is hereby given that the Department of Veterans (VA) is changing the System Manager, system number and address in three systems of records.

DATES: These amendments are effective on May 4, 2000.

FOR FURTHER INFORMATION CONTACT: Director, Field Liaison Staff (20SA), Office of Information Management, Veterans Benefits Administration, VA Central Office, 810 Vermont Avenue, NW, Washington, DC 20420, (202) 273–6947.

Approved: April 18, 2000.

Togo D. West, Jr.,

Secretary of Veterans Affairs.

Notice of Amendment to Systems of Records

1. The system identified as 38VA23, ''Veterans and Beneficiaries Identification and Records Location Subsystem-VA,'' published at 40 FR 38095 (8/26/75), completely revised at 47 FR 367 (1/5/82) and amended at 48 FR 45491 (10/15/83), 50 FR 13448 (4/4/85), 60 FR 32210 (6/20/95), 63 FR 7196 (2/12/98), and 64 5862 (2/5/99) is amended to read as follows:

38VA21

SYSTEM NAME:

Veterans and Beneficiaries Identification and Records Location Subsystem-VA

* * * * *

SYSTEM MANAGER(S) AND ADDRESS:

Director, Compensation and Pension Service (21), VA Central Office, 810 Vermont Avenue, NW, Washington, DC 20420.

2. The system identified as 45VA23, ''Veterans Assistance Discharge System'' which was established at 40 FR 38095 (8/26/75), completely revised at 47 FR 367 (1/5/82), and amended at 51 FR 36894 (10/16/86), and 52 FR 24086 (6/26/87) is amended to read as follows:

45FVA21

SYSTEM NAME:

Veterans Assistance Discharge System-VA.

* * * * *

SYSTEM MANAGER(S) AND ADDRESS:

Director, Compensation and Pension Service (21), VA Central Office, 810 Vermont Avenue, NW, Washington, DC 20420.

3. The system identified as 60VA23, ''Repatriated American Prisoners of War-VA'' established at 44 FR 36287 (6/21/79) and amended at 46 FR 16173 (3/11/81), 48 FR 38708 (8/25/83), and 50 FR 36952 (9/10/85) is amended to read as follows:

60VA21

SYSTEM NAME:

Repatriated American Prisoners of War-VA.

* * * * *

SYSTEM MANAGER(S) AND ADDRESS:

Director, Compensation and Pension Service (21), VA Central Office, 810 Vermont Avenue, NW, Washington, DC 20420.

[FR Doc. 00–11086 Filed 5–3–00; 8:45 am]

BILLING CODE 8320–01–M

Corrections

Federal Register

Vol. 65, No. 87

Thursday, May 4, 2000

This section of the FEDERAL REGISTER contains editorial corrections of previously published Presidential, Rule, Proposed Rule, and Notice documents. These corrections are prepared by the Office of the Federal Register. Agency prepared corrections are issued as signed documents and appear in the appropriate document categories elsewhere in the issue.

DEPARTMENT OF COMMERCE

International Trade Administration

University of North Dakota; Notice of Decision on Application for Duty-Free Entry of Scientific Instrument

Correction

In notice document 00–9996 appearing on page 21397 in the issue of Friday, April 21, 2000, make the following correction:

On page 21397, in the first column, in the third paragraph. in the eleventh line, ''10–11'' should read ''10^{-11} ''.

[FR Doc. C0–9996 Filed 5–3–00; 8:45 am]

BILLING CODE 1505–01–D

COMMODITY FUTURES TRADING COMMISSION

17 CFR Part 4

RIN 3038-AB34

Commodity Pool Operators; Exclusion for Certain Otherwise Regulated Persons From the Definition of the Term ''Commodity Pool Operator''

Correction

In rule document 00–10087 beginning on page 24127, in the issue of Tuesday, April 25, 2000, make the following correction:

§ 4.5 [Corrected]

On page 24128, in the third column §4.5 (a)(4), in the third line, after ''shall'' add ''not''.

[FR Doc. C0–10087 Filed 5–3–00; 8:45 am]

BILLING CODE 1505–01–D

DEPARTMENT OF TRANSPORTATION

Coast Guard

33 CFR Part 165

[CGD01-00-015]

RIN 2115-AA97

Safety Zone: Staten Island Fireworks, Arthur Kill

Correction

In proposed rule document 00–10153 beginning on page 21686, in the issue of Monday, April 24, 2000, make the following correction:

§ 165.T01–015 [Corrected]s

On page 21688, in the first column §165.T01–015 (a), in the fifth line, ''40° 3018′ N 074° 1500 W'' should read ''40° 30′ 18″ N 074° 15′ 30″ W''.

[FR Doc. C0–10153 Filed 5–3–00; 8:45 am]

BILLING CODE 1505–01–D

DEPARTMENT OF TRANSPORTATION

Coast Guard

[USCG-2000-7206]

Voluntary Guidelines on Recreational Activities To Control the Spread of Zebra Mussels and Other Aquatic Nuisance Species

Correction

In notice document 00–9248 beginning on page 19953 in the issue of Thursday, April 13, 2000, make the following corrections:

1. On page 19955, in the first column, under the heading ''Guidelines '' designated paragraph (2) should read, ''Submerge and wash your suit and equipment, and rinse the inside of your bc with hot water (at least 40°C or 104°F)''.

2. On page 19956, in the first column, in the table, the heading should read, ''Gallons of Water''.

[FR Doc. C0–9248 Filed 5–3–00; 8:45 am]

BILLING CODE 4910–15–U

Federal Register

Thursday,
May 4, 2000

Part II

Environmental Protection Agency

40 CFR Part 9 et al.

National Primary Drinking Water Regulations: Public Notification Rule; Final Rule

ENVIRONMENTAL PROTECTION AGENCY

40 CFR Parts 9, 141, 142 and 143

[FRL–6580–2]

RIN 2040–AD06

National Primary Drinking Water Regulations: Public Notification Rule

AGENCY: Environmental Protection Agency (EPA).

ACTION: Final rule.

SUMMARY: Today, EPA is publishing final regulations to revise the general public notification regulations for public water systems to implement the public notification requirements of the 1996 Safe Drinking Water Act (SDWA) amendments. The regulations set the requirements that public water systems must follow regarding the form, manner, frequency, and content of a public notice. Public notification of violations is an integral part of the public health protection and consumer right-to-know provisions of the 1996 SDWA amendments. Owners and operators of public water systems are required to notify persons served when they fail to comply with the requirements of the National Primary Drinking Water Regulations (NPDWR); have a variance or exemption from the drinking water regulations; or are facing other situations posing a risk to public health. EPA is also publishing today revisions to the Consumer Confidence Report (CCR) regulation to be consistent with the final public notification regulation.

DATES: Today's rule is effective June 5, 2000. However, the new regulations under Part 141, Subpart Q do not apply to public water systems in States with primacy for the public water system supervision program until May 6, 2002 or until the State-adopted rule becomes effective, whichever comes first. The new regulations under Part 141, Subpart Q also do not apply to public water systems in jurisdictions where EPA directly implements the program until October 31, 2000. Until the new regulations under Part 141, Subpart Q apply, public water systems must continue to comply with the public notification requirements under § 141.32. For purposes of judicial review, this final rule is promulgated as of 1 p.m. Eastern time on May 18, 2000.

ADDRESSES: Copies of the public comments received, EPA responses, and all other supporting documents are available for review at the U.S. Environmental Protection Agency; 401 M Street SW, Water Docket (MC–4101), Docket #W–98–19, Room EB 57, Washington, DC 20460. For an appointment to review the docket, call 202–260–3027 between 9 a.m. and 3:30 p.m. and refer to docket W–98–19.

FOR FURTHER INFORMATION CONTACT: The Safe Drinking Water Hotline, toll free (800) 426–4791 for general information about the rule and copies of this document. For technical inquiries, contact Carl B. Reeverts at (202) 260–7273 or e-mail: *reeverts.carl@epa.gov.*

SUPPLEMENTARY INFORMATION:

Acronyms Used in This Rule

CCR Consumer Confidence Report
CWS Community Water System
DBP Disinfection Byproduct
EPA Environmental Protection Agency
HPC Heterotrophic Plate Count
IESWTR Interim Enhanced Surface Water Treatment Rule
IOC Inorganic Chemical
LCR Lead and Copper Rule
MCL Maximum Contaminant Level
MCLG Maximum Contaminant Level Goal
MRDL Maximum Residual Disinfectant Level
MRDLG Maximum Residual Disinfectant Level Goal
NCWS Non-Community Water System
NPDWR National Primary Drinking Water Regulation
NTNCWS Non-Transient Non-Community Water System
NTU Nephelometric Turbidity Unit
OGWDW Office of Ground Water and Drinking Water
OW Office of Water
PN Public Notification
PWS Public Water System
SDWA Safe Drinking Water Act
SMCL Secondary Maximum Contaminant Level
SOC Synthetic Organic Chemical
SWTR Surface Water Treatment Rule
TCR Total Coliform Rule
TT Treatment Technique
TWS Transient Non-Community Water System
VOC Volatile Organic Chemical

Table of Contents

I. Statutory Authority
II. Regulation Background
III. Significant Decisions Affecting the Final Rule
IV. Discussion of Final Rule
A. Purpose and Applicability
B. Effective Dates and Rationale
C. Summary of Changes to Current Public Notification Requirements
D. ''Plain Language'' Format of Final Rule
E. General Provisions of Final Rule (§ 141.201)
1. Who Must Give Public Notice?
2. What Type of Public Notice is Required for Each Situation?
3. Who Must Be Notified?
F. Form, Manner, and Frequency of the Tier 1 Public Notice: Violations and Situations With Significant Potential to Have Serious Adverse Effects on Human Health as a Result of Short-Term Exposure (§ 141.202)
1. Tier 1 Violations and Situations
2. Timing of the Tier 1 Public Notice (and Consultation Requirement)
3. Form and Manner of the Delivery of the Tier 1 Notice
G. Form, Manner, and Frequency of the Tier 2 Public Notice: Other Violations With Potential To Have Serious Adverse Effects on Human Health (§ 141.203)
1. Tier 2 Violations and Situations
2. Timing of the Tier 2 Public Notice
3. Form and Manner of the Delivery of the Tier 2 Notice
H. Form, Manner, and Frequency of the Tier 3 Public Notice: All Other Violations and Situations Requiring Public Notice (§ 141.204)
1. Tier 3 Violations and Situations
2. Timing of the Tier 3 Public Notice
3. Form and Manner of the Delivery of the Tier 3 Notice
4. Option to Use an Annual Notice, Including the CCR, to Deliver Tier 3 Notices
I. Content of the Public Notice (§ 141.205)
1. Standard Elements of the Public Notice
2. Multilingual Requirements for Public Notices
3. Standard Health Effects Language
4. Standard Language for Monitoring and Testing Procedure Violations
5. Standard Language to Encourage Customers Receiving the Public Notice To Distribute the Notice to Other Persons Served
J. Other Public Notification Requirements
1. Notice to New Billing Units or New Customers (§ 141.206)
2. Special Notice to Announce the Availability of the Results of Unregulated Contaminant Monitoring (§ 141.207)
3. Special Notice for Exceedance of the Fluoride Secondary Maximum Contaminant Level (SMCL) (§ 141.208)
4. Special Notice for Nitrate Exceedances Above the MCL by Non-Community Water Systems (NCWS), Where Granted Permission by Primacy Agency Under § 141.11(d) (§ 141.209)
5. Conditions Under Which the Primacy Agency May Give Notice on Behalf of Public Water System (§ 141.210)
K. Reporting to the Primacy Agency and Retention of Records
1. Public Water System Reporting to the Primacy Agency (§ 141.31)
2. Retention of Records by Public Water Systems (§ 141.33)
L. Other Changes to the Current Code of Federal Regulations (CFR) To Be Consistent With the Final Public Notification Regulations
M. Special State/Tribal Primacy Requirements and Rationale (40 CFR Part 142, Subpart B)
V. Changes to the Consumer Confidence Report (CCR) Regulation To Be Consistent With the Final Public Notification Regulation
VI. Cost of Rule
VII. Other Administrative Requirements

A. Executive Order 12866: Regulatory Review
B. Regulatory Flexibility Act (RFA), as amended by the Small Business Regulatory Enforcement Fairness Act of 1996 (SBREFA), 5 U.S.C. 601 *et seq.*
C. Paperwork Reduction Act
D. Executive Order 13132: Federalism
E. Executive Order 13084: Consultation and Coordination With Indian Tribal Governments
F. Unfunded Mandates Reform Act
G. Executive Order 12898: Environmental Justice
H. Executive Order 13045: Protection of Children From Environmental Health Risks and Safety Risks
I. National Technology Transfer and Advancement Act
J. Congressional Review Act

Regulated Entities. Entities potentially regulated by this action are public water systems (PWS). The following table provides examples of the regulated entities under this rule. A public water system, as defined by section 1401 of SDWA, is ''a system for the provision of water for human consumption through pipes or other constructed conveyances, if such system has at least fifteen service connections or regularly serves at least twenty-five individuals.'' EPA defines ''regularly served'' as receiving water from the system sixty or more days per year. EPA has an inventory totaling over 170,000 public water systems nationwide.

TABLE OF REGULATED ENTITIES

Category	Examples of regulated entities
State/Local/Tribal governments	Publicly-owned PWSs, such as municipalities; county governments, water districts, water and sewer authorities, state governments, and other publicly-owned entities that deliver drinking water as an adjunct to their primary business (e.g., schools, State parks, roadside rest stops).
Industry	Privately-owned PWSs, such as private utilities, homeowner associations, and other privately-owned entities that deliver drinking water as an adjunct to their primary business (e.g., trailer parks, factories, retirement homes, day-care centers).
Federal government	Federally-owned PWSs, such as water systems on military bases.

The table is not intended to be exhaustive but rather provides a guide for readers regarding entities likely to be regulated by this action. This table lists the types of entities that EPA is now aware could potentially be regulated by this action. Other types of entities not listed in this table could also be regulated. To determine whether your facility is regulated by this action, you should carefully examine the applicability criteria in § 141.201 of the rule. If you have questions regarding the applicability of this section to a particular entity, consult the person listed in the **FOR FURTHER INFORMATION CONTACT** section.

I. Statutory Authority

Section 114 of the Safe Drinking Water Act Amendments of 1996 (Public Law 104–182), enacted August 6, 1996, amended section 1414(c) of the Act (42 U.S.C. 300g–3(c)). Sections 1414(c)(1) and (c)(2) were significantly revised and require EPA to amend the existing public notification regulations. The amended rules are intended to give consumers more accurate and timely information on violations, taking into account the seriousness of any potential adverse health effects that may be involved. There is no deadline for promulgating the revised public notification rule, but EPA is publishing the final rule today to enable States to coordinate public notification rule adoption and implementation with the ongoing adoption and implementation of the Consumer Confidence Report regulations.

The public notification (PN) provisions were part of the original SDWA in 1974 and were subsequently modified in the 1986 SDWA amendments. The public notification regulations currently in place were promulgated in 1987 and became effective in 1989 (40 CFR 141.32). The existing rule remains in place until the new rule goes into effect.

SDWA Section 1414(c)(1) establishes who must give public notice, under what circumstances a notice must be given, and who must receive the notice. Section 1414(c)(1)(A) requires that all public water systems (PWS) give notice to persons served of any failure to comply with any national primary drinking water regulations (NPDWR), including any required monitoring. Section 1414(c)(1)(B) further requires a PWS to provide a notice when it is operating under a variance or exemption, or when a PWS fails to comply with the requirements of a variance or exemption. Section 1414(c)(1)(C) authorizes EPA, at the Administrator's discretion, to require PWSs to provide notice of the concentration level of any unregulated contaminant monitored under EPA regulations. Except for the addition of paragraph (C) of section 1414(c)(1), these requirements are unchanged from the previous SDWA.

Section 1414(c)(2) sets the specific requirements for the form, manner, and frequency of a notice. Section 1414(c)(2)(A) requires EPA to issue regulations, after consultation with the States, that prescribe the detailed public notification requirements. The regulations must provide for different frequencies of notices based on the persistence of the violations and the seriousness of any potential adverse health effects that may be involved. Except for the explicit requirement in the 1996 amendments that EPA consult with the States prior to promulgating the revised regulations, the general directions to EPA for issuing regulations are unchanged.

Section 1414(c)(2)(B) enables States, at their option, to establish alternate requirements with respect to the form and content of the public notice, as long as the alternative State program provides the same type and amount of information as required under the EPA regulations. This section was added as a result of the 1996 amendments.

Section 1414(c)(2)(C) directs EPA to issue regulations which require PWSs to distribute a notice within 24 hours to persons served for violations with potential to have serious adverse effects on human health from short-term exposure. The PWS is also required to send the same notice to the primacy agency and to consult with the primacy agency within the same 24-hour period on any additional public notice requirements. This section is also a new statutory requirement.

Section 1414(c)(2)(D) directs that EPA's regulations require PWS to provide written notice to each person served for each violation not covered under Section 1414(c)(2)(C). The section specifies that the notice may be: (1) In the first bill, if any, after the violation; (2) in an annual report issued no later than one year after the violation; or (3)

by mail or direct delivery as soon as practicable, but no later than one year after the violation. This section significantly revises and simplifies the previous statutory requirements on the form, manner, and timing of the notice.

Section 1414(c)(2)(E) allows the Administrator the option to require a PWS to give notice to persons served of the results of unregulated contaminant monitoring required by EPA under section 1445(a). EPA recently published a revised unregulated contaminant monitoring regulation (UCMR), which requires some systems to monitor for specified contaminants (64 FR 50556, September 17, 1999). This Section is new under the 1996 SDWA amendments.

Today's final rule fulfills the rulemaking requirements outlined in amended Sections 1414(c)(1) and 1414(c)(2) of the SDWA, as amended.

II. Regulation Background

The final rule published today was proposed on May 13, 1999 (64 FR 25963). At the same time as the rule was proposed, EPA made available for review a draft Public Notification Handbook, comprised of public notice templates for different violation situations and other aids to public water systems to support implementation of the revised regulation. The final rule is based on input from a broad range of stakeholders from the public and private sectors. The Agency has also actively involved the States as partners in the rule development, as required under Section 1414(c)(2)(A) of the 1996 SDWA amendments.

To gain early input and information from stakeholders on problems with the current public notification program, EPA held a series of stakeholder meetings in Indianapolis, Indiana, Washington, D.C., and Seattle, Washington in late 1997, prior to initiating the rulemaking. EPA also used the findings and recommendations from a June, 1992 GAO report (''Drinking Water Consumers Often Not Well Informed of Potentially Serious Violations'' (GAO/RCED–92–135)).

In May and June of 1999, during the public comment period after the rule was proposed, EPA hosted public meetings in Madison, Wisconsin; Washington, DC; Allentown, Pennsylvania; and Phoenix, Arizona. The purpose of the meetings was to take comment on the proposed public notification rule and to discuss (in a workshop-type setting) the draft Public Notification Handbook. The meetings were very well attended and the results greatly benefitted both the final public notification rule and the final Public Notification Handbook. The final Handbook is expected to be published shortly. Reports from all the meetings are available for review at EPA's Water Docket (W–98–19) or by downloading the documents from EPA's website (www.epa.gov/safewater).

EPA consulted with the States throughout the development of this rule, as required under section 1414(c)(2)(A). Prior to initiating the rulemaking, EPA met with a group of States, as part of the early involvement meetings set up by the Association of State Drinking Water Administrators (ASDWA), to develop the scope of the process and identify significant issues under the new statute. During the development of the proposed rule, several State drinking water managers participated as members of the EPA regulation workgroup. Their involvement in the workgroup continued through the development of this final rule. EPA also provided briefings to ASDWA on request several times as the rule moved forward.

III. Significant Decisions Affecting the Final Rule

The final rule published today makes a number of significant changes to what was proposed, based on decisions EPA made in response to the comments received. Section IV of the preamble gives a detailed summary of the final rule and an explanation of the significant changes made in response to comments. Decisions on five key issues affecting the final rule are highlighted below:

A. List of Violations and Situations Requiring a Tier 1 (24-Hour) Public Notice

EPA received many comments related to the proposed public notice tier level for violations of the Total Coliform Rule (TCR) and the Surface Water Treatment Rule (SWTR). Except for violations where fecal contamination was found, the notice tier level for all the TCR MCL and SWTR TT violations was proposed to be Tier 2 (30-day notice). Over half of the commenters on this issue recommended that the final rule change the notice requirement for at least some of the TCR and SWTR violations to Tier 1. In particular, many of these commenters believed that violations related to exceedances of the turbidity limit were more often than not a strong indicator of harmful drinking water posing a significant risk from short-term exposure. The rest of those commenting on this issue specifically supported leaving as Tier 2 the routine TCR violations and all SWTR violations, including those violations related to exceedances of the turbidity limit. These commenters believed that turbidity violations were more often than not a false indicator of potential health risk.

After considering all the comments, EPA decided to stay with the proposal requiring a Tier 2 notice for all TCR and SWTR violations (other than where fecal contamination is found under the TCR rule) because EPA believes that an automatic Tier 1 notice requirement is not justified. Routine TCR and SWTR violations (without supporting evidence) are not sufficiently strong or predictable indicators of significant potential of risk from short-term exposure. At the same time, in response to the range of comments related to the appropriate tier level for turbidity exceedances, EPA agrees that certain exceedances of the turbidity limit deserve special attention by the primacy agency for public notification purposes.

Accordingly, the final rule continues to classify all turbidity violations as Tier 2; adds a new requirement that PWSs consult with the primacy agency within 24 hours when exceedances of the maximum allowable turbidity limit occur; enables the primacy agency after the consultation to elevate specific turbidity violations to Tier 1 when warranted; and requires an automatic Tier 1 notice when consultation does not take place within the 24-hour period. Since the significance of the risk to health of an exceedance of the turbidity limits is situational, EPA believes the final rule ensures that notices for turbidity violations indicating an immediate health risk will go out quickly when necessary (based on the immediate consultation requirement) and unnecessary notices will be avoided where the violation indicates no immediate risk to health. These decisions are discussed in greater detail in section IV.F.1 of the preamble.

B. Standard Health Effects Language Required in Notices for MCL/TT Violations

EPA requested comment on EPA's proposal to use the CCR standard health effects language to meet the public notification requirement. Although most commenters supported keeping the CCR and public notice health effects language the same, a significant minority of commenters believed that the public notice language should be separate from the CCR language because of the different objectives of the public notice. Several commenters also believed that the proposed language for specific violations needed revision, and several offered alternative language that they believed was more accurate and useful.

After considering all the comments, EPA decided to reaffirm its intent to keep the standard health effects language identical for the public notification and CCR rules. Today's rule publishes identical language in the two rules for all the existing regulated contaminants. EPA believes the benefits of having identical core health effects language outweighs the value of tailoring the language to any unique objectives of the public notice. EPA also reviewed the comments offering alternative language for specific violations, with particular focus on whether any of the proposed language was erroneous or misleading. With three exceptions, the final language in today's rule (including the amended CCR rule) is the same language as was proposed. The three exceptions are for fluoride, fecal coliform/E.coli, and several of the disinfectant/disinfection byproducts. These decisions are discussed in greater detail in section IV.I.3 of the preamble.

C. Tier 2 (30-Day) Notice Deadline and Flexibility To Extend in Appropriate Circumstances

EPA requested comment on the proposed 30-day time period required for the initial Tier 2 public notice, the requirement for a repeat notice of ongoing violations every three months, and the discretion given to the primacy agency in specific circumstances to extend the initial notice to three months or the repeat notice frequency to one year (either on a case-by-case basis or by rule). EPA received a wide range of comments on the proposed 30-day time period, ranging from leaving the current 14-day requirement intact (or even requiring the notice sooner), to support for the 30-day proposed period, to moving the initial notice to 90 or 120 days after the violation. The comments received related to the proposed discretion allowing primacy agencies to extend the deadline also ranged widely, from disagreeing with allowing any discretion at all, to extending the deadline, to requesting that the discretion allowed be more open-ended.

After considering the wide range of comments, EPA retained the proposed 30-day deadline for the initial notice and the 3-month repeat notice frequency in the final rule. But EPA did make changes in the final rule language in response to commenters requesting reconsideration or clarification of EPA's intent in the proposed rule. The final rule redefines how and when a primacy agency would be allowed to extend the initial notice beyond 30 days and under what circumstances the primacy agency could allow less frequent repeat notices for unresolved violations. The final rule specifically disallows extensions beyond 30 days for unresolved violations or less frequent repeat notice for ongoing TCR and SWTR violations. The final rule also does not allow primacy agencies to set ''across-the-board'' extensions in their policies and rules that would automatically extend the notice period or frequency of repeat notice for all the other violations.

EPA continues to believe that extensions to the fixed deadlines may be appropriate in certain circumstances, since Tier 2 violation situations are very diverse. Tier 2 situations range from violations that on some occasions may pose potential adverse health effects from short-term exposure (such as SWTR TT violations), to unresolved violations that pose chronic health effects from long-term exposure (such as benzene violations), and to resolved violations no longer posing any potential risk to health. One size does not fit all. The final rule reaffirms this intent to provide flexibility to the primacy agency to deviate from the deadline in EPA's rule where warranted. These decisions are discussed in greater detail in Section IV.G.2 of the preamble.

D. Form and Manner of the Delivery of Public Notices

EPA requested comment on the revised requirements in the proposal for deciding on the method of delivery of the public notice. The proposed rule would require a water system to: (1) Select at least one minimum method from a short list in the regulation, and (2) provide additional notices by any other method reasonably calculated to reach other persons not reached by the initial method selected. Some commenters believed the minimum list should be expanded to allow, for instance, use of the newspaper as the minimum method, as in the current rule. Other commenters requested that the final rule require that water systems use more than one minimum method, since one method is likely to be an inadequate response in many cases.

After considering the comments, EPA has decided to maintain the basic requirement as proposed: To require water systems to select at least one delivery method from the regulatory list and to take steps reasonably calculated to reach the others served by the system. EPA believes requiring water systems to select at least one minimum method sets a simple, enforceable baseline level of performance for all public notices. This initial step must be supplemented by other actions when the minimum method is not likely to reach all persons served by the system. In the final rule, EPA did not expand the list of minimum delivery methods it proposed but it does give the primacy agency discretion to select a different minimum method not listed in EPA's rule where warranted. The final rule also includes other minor changes to the rule language to respond to specific requests for clarification of EPA's intent. These decisions for each of the three notice tiers are discussed in greater detail in sections IV.F.3, IV.G.3, and IV.H.3 of the preamble.

E. Consolidating Public Notice Regulations Into New Subpart (40 CFR Part 141, Subpart Q).

As part of the development of the final rule, EPA conducted a thorough search of Part 141 of the current Code of Federal Regulations (CFR) to identify all the places where a public notification requirement is set or where the current public notification regulations are referenced. This led to a consolidation of several ongoing public notification requirements into the new public notification regulations in Subpart Q of 40 CFR Part 141. The benefits of consolidating all the requirements in one place (Subpart Q) are significant. The final Subpart Q provides in one place a complete and easily referenced set of requirements. This should greatly enhance the understanding of the public notification requirements and lead to greater voluntary compliance. Many of these ancillary public notification requirements are not in the current regulations under § 141.32 and many were not part of the proposed rule revision on May 13, 1999. EPA believes that since they do not substantively alter the existing requirements, they do not require prior notice and opportunity for comment. A summary list of the changes to the CFR are included in Table C in Section IV.L of the preamble.

IV. Discussion of Final Rule

This section explains the elements of the final regulation, comments requested and comments received on the proposal, and EPA's response to the comments. EPA made a number of significant changes to the proposal based on comments received, clarified some requirements, and edited and reorganized some of the proposed regulatory language to improve the presentation. EPA requested comment on all elements of the proposed regulation. Comments were received from 53 individuals and organizations, representing 22 States, 20 utilities, and 11 environmental organizations and public interest groups. Almost 200 people participated in at least one of the four public meetings hosted by EPA to

take comment on the proposed regulation. The ''Response to Comments'' document, all the written comments, and the public meeting reports are available for review at EPA's Water Docket (W–98–19). Copies are also available by downloading the documents from EPA's website (*www.epa.gov/safewater/pws/pn/pn.html*).

A. Purpose and Applicability

Today's rule revises the minimum requirements that public water systems must meet regarding the form, manner, frequency, and content of the public notification. Public water systems must give notice to persons served for all violations of National Primary Drinking Water Regulations (NPDWR) and for other situations posing a risk to public health from the drinking water. The term NPDWR Violations is used in the public notification regulations to include violations of the Maximum Contaminant Level (MCL), Maximum Residual Disinfectant Level (MRDL), treatment technique (TT), monitoring, and testing procedure requirements. Public notice is not required, for example, for violation of the Consumer Confidence Report regulation. See Table 1 and Appendix A of the final rule for the NPDWR violations and other situations requiring a public notice. Violations and situations not listed in Appendix A do not require a public notice under Subpart Q.

The rule applies to existing and new public water systems that violate a NPDWR or have other situations that pose a risk to health from the drinking water. A ''public water system,'' as defined in 40 CFR 141.2 , is ''a system for the provision to the public of water for human consumption through pipes or * * * other constructed conveyances, if such system has at least fifteen service connections or regularly serves at least twenty-five individuals daily at least 60 days out of the year.'' Public water systems regulated under Part 141 may be publicly-owned or privately-owned.

A public water system (PWS) is either a community water system (CWS) or non-community water system (NCWS). A CWS, as defined in § 141.2, means ''a public water system which serves at least 15 service connections used by year-round residents or regularly serves at least 25 year-round residents.'' A NCWS means ''a public water system that is not a community water system.''

Non-community water systems are further broken out in the drinking water regulations into transient non-community water systems (TWS) and non-transient non-community water systems (NTNCWS). A NTNCWS is defined by EPA under § 141.2 as ''a public water system that is not a community water system and that regularly serves 25 of the same people over six months of the year.'' An example is a school or business that has its own water well. A TWS is defined by EPA under § 141.2 as ''a non-community water system that does not regularly serve 25 of the same persons over six months of the year.'' An example is a roadside rest stop with its own water well.

For illustration purposes, Table A provides a summary of the number of public water systems, broken out by type of system, the number of these systems with violations during fiscal year 1998, and the total number of violations during the same period. The numbers have been updated from those presented in the preamble of the proposed rule, which were based on FY 1996 information in the Safe Drinking Water Information System (SDWIS) in mid-1997.

Public water systems must meet the requirements of all NPDWRs in effect. Currently, there are NPDWRs in effect covering 80 separate contaminants. EPA has also published final regulations for the Interim Enhanced Surface Water Treatment Rule (IESWTR) and the Stage 1 Disinfection/Disinfectant Byproducts Rule (D/DBP), which will increase the number of regulated contaminants to 88 once they go into effect. There are also other regulations in progress that will increase the number of regulated contaminants to over 90 contaminants by 2002.

Table A shows that 36,467 (21 percent) of the 170,376 PWS had one or more violations in FY 1998. Overall, the 36,467 PWS with violations committed a total of 128,459 violations in FY 1998. Over 86 percent (or 108,459) of these violations were for failure to monitor according to the regulations. Although not all violations require a separate public notice, each violation requires the PWS to comply with the public notification requirements.

TABLE A.—NUMBER OF PUBLIC WATER SYSTEMS (PWS) AND VIOLATIONS IN FY 1998

Type of PWS	Number of PWS	Number of PWS with violations	Number of violations
1. Community Water Systems (CWS)	54,367	13,024	64,914
2. Non-transient Non-community Water Systems (NTNCWS)	20,255	4,672	27,785
3. Transient Non-community Water Systems (TWS)	95,754	18,771	35,760
Total	170,376	36,467	128,459

Source: FY 1998 inventory and violation data from Safe Drinking Water Information System (SDWIS), January, 1999.

As shown in Table A, 54,367 (32 percent) of the public water systems are CWSs. CWSs must comply with all NPDWRs in effect. CWSs serve residential populations and range from large municipal systems that serve millions of persons to small systems that serve fewer than 100 persons. CWSs can be further categorized as publicly-owned systems, privately-owned systems, and systems that provide water as an ancillary function of their principal purpose. In FY 1998, 13,024 CWSs committed 64,914 violations. Approximately 80 percent of community water systems serve fewer than 3,300 people.

Of the public water systems, 20,255 (12 percent) are NTNCWS. Virtually all NTNCWSs provide water as an ancillary function of their principal purpose (for example, schools, day-care facilities, factories). In general, NTNCWSs must comply with the same national primary drinking water regulations as community water systems. During FY 1998, 4,672 NTNCWSs committed 27,785 violations. Approximately 99 percent of NTNCWSs serve fewer than 3,300 people.

The rest of the regulated public water systems (95,754 systems or 56 percent) are TWSs. Virtually all TWSs provide water as an ancillary function of their principal purpose (for example, highway rest stops, gas stations, state parks). TWSs must comply only with specified national primary drinking water regulations where short-term

exposure may pose a health threat—total coliform, nitrate, nitrite, total nitrate and nitrite, and violations of the Surface Water Treatment Rule. TWSs using surface water serving 10,000 persons or more must also comply with the new Interim Enhanced Surface Water Treatment Rule (IESWTR) and certain provisions of the Stage 1 Disinfectant/Disinfection Byproducts (D/DBP) rule when they go into effect starting in 2002. TWSs using surface water serving less than 10,000 persons or using ground water sources must comply with certain provisions of the Stage 1 D/DBP rule by 2004. In FY 1998, 18,771 TWSs committed 35,760 violations. Over 99 percent of TWSs serve fewer than 3,300 people.

B. Effective Dates and Rationale

Today's Rule: The public notification rule provisions under Part 141, Subpart Q become effective June 5, 2000. However, public water systems will continue to comply with the public notification requirements under § 141.32 until the date the new Subpart Q regulations go into effect in each State, Territory, Tribe, or the District of Columbia. EPA has set different compliance deadlines based on whether EPA or the State (or Territory or Tribe) has primary enforcement authority (''primacy'') for the public water system supervision program. As of today's rule, States (or Territories) have primacy in all jurisdictions except Wyoming, the District of Columbia, and on Indian lands. EPA directly implements the public water system supervision programs in Wyoming, Washington, D.C., and on all Indian lands. The term ''primacy agency'' is used in the final public notification rule to refer to either EPA or the State (or Territory or Tribe) in cases where EPA, or the State, Territory, or Tribe, exercises primary enforcement responsibility for the Subpart Q public notification. The term ''State'' is used throughout the rule to apply to States, Territories, Tribes, and the District of Columbia.

Public water systems in primacy States must continue to comply with the public notification requirements under § 141.32 until May 6, 2002 or until the date the State's revised regulation under its approved primacy program becomes effective, whichever comes first. The two-year period matches the maximum time period allowed for States under the primacy regulations (40 CFR Part 142, Subpart B) to adopt new and revised National Primary Drinking Water Regulations (NPDWRs). EPA believes it is appropriate to make the effective date in primacy States consistent with the basic two-year time primacy revision period. Coordinating the phase-in of the new public notification requirements with the State adoption of the revised regulations in each State will avoid the potential confusion of having different State and EPA requirements in effect in the State at the same time. Although States are free to wait the full two years to adopt the new rule, EPA strongly encourages States to consider early adoption in order to combine the public notification rule and the Consumer Confidence Report rule into one primacy revision package or to otherwise take early advantage of the efficiencies in today's rule.

Public water systems in jurisdictions where the drinking water program is directly implemented by EPA must continue to comply with the public notification requirements under § 141.32 until October 31, 2000. EPA believes that setting the compliance date for the new rule at 180 days after publication is appropriate and achievable for public water systems in the jurisdictions directly implemented by EPA. Six months after publication of the final rule is sufficient time for EPA and the water systems to adjust their operating procedures to comply with the new requirements. Early implementation will enable the water systems to take advantage of the efficiencies in the new regulation as early as possible, leading to a more effective public notification program.

In practical terms, the different compliance dates allowed under this rule mean that the new requirements will go into effect at different times nationwide, based on the speed of the State adoption of the new requirements and whether EPA or the State directly implements the program. Regardless of the State primacy situation, the latest the rule will go into effect in any State will be May 6, 2002, even in those States that request and are granted an extension to adopt the revised regulation beyond the basic two-year primacy revision time period.

The final public notification rule applies to new and existing violations and situations after the date public water systems must comply with the new rule. However, EPA is not requiring that public water systems provide initial public notices under the new rule where the initial public notice has already been given under the regulations in place at the time. However, unless the primacy agency makes a different determination on a case-by-case basis, the new rule will apply to repeat notices for existing violations or for any public notice requirements applying to ongoing violations after the new rule is in effect.

Comments Requested on Proposal: EPA had asked for comment on the proposed effective dates and solicited suggestions on other options to put the new regulations into effect earlier. Several comments were received on the proposed effective date, all in support of the two-year period allowed for water systems in primacy States.

EPA Response to Comments: The two-year effective date in the final rule for water systems in primacy States is identical to what was proposed. The final rule does, however, change the proposed effective date for water systems in drinking water programs directly implemented by EPA from 90 days after publication to 180 days after publication. The shift from 90 days to 180 days was a result of a strong concern raised during discussions on the proposed rule that 90 days gave EPA insufficient time to effectively make the transition from the existing program to the new program in areas where it directly implements the program. EPA believes the change to 180 days in the final rule better fits the time period needed to shift to the new program under the revised regulations.

C. Summary of Changes to Current Public Notification Requirements

The final rule is a significant revision from the public notification regulation under § 141.32 of this part, which has been in effect since 1989. The regulation under § 141.32 is referred to throughout the preamble as the ''current rule.'' The reason EPA chose to refer to the rule under § 141.32, which will be replaced by today's action, as the ''current rule'' is because it will continue to apply to some water systems for up to two years after publication of today's rule. Table B is a summary of the major differences between the current rule and the final revised rule.

TABLE B.—SUMMARY OF DIFFERENCES BETWEEN REVISED PN RULE AND CURRENT RULE

Statutory authority (SDWA, as amended in 1996)	Current rule (§ 141.32)	Revised PN rule (part 141, subpart Q)
1414(c)(1), Each owner or operator of a PWS shall give notice of NPDWR violations, levels of unregulated contaminants, and existence of a variance or exemption to the persons served by the system.	(§ 141.32(a) and (b)) Owner or operators of PWSs must notify persons served by the system for the following violations/ situations:. Maximum contaminant levels (MCL) Treatment technique Testing procedure Monitoring Operation under a variance or exemption Noncompliance with variance or exemption schedule.	(§§ 141.201(a) and 141.202(a)) Includes violations from current rule and adds broader definition of waterborne disease outbreak and other waterborne emergencies, adds new IESWTR and DBP standards, moves fluoride SMCL and nitrate exceedances of the MCL for NCWS when allowed by primacy agency under 141.11(d), failure to take confirmation sample for nitrate, and unregulated contaminant monitoring public notices from other parts of the regulations. Adds a new Appendix A to the rule listing all violations and situations where public notification is required. (§ 141.201(c)) Requires water systems to notify owners or operators of consecutive systems. Also allows primacy agencies to permit systems to limit distribution of the notice if the violation is in a portion of the distribution system that is physically or hydraulically isolated from other parts of the system.
1414(c)(2)(A), Manner, frequency, and form are prescribed based on seriousness and frequency of violations.	(§§ 141.32(a)(1)(iii) and 141.32(a) and (b)) There is a three-tier system, although tiers are not named. Public notices are divided into three tiers: violations of MCLs that may pose an acute risk to human health; MCLs, treatment technique, and variance or exemption schedule violations; and other violations (including monitoring) and operation under a variance or exemption.	(§ 141.201(b)) Tiers are defined based on seriousness of the violation or situation and of potential health effects, and all violations or situations are assigned to a tier (Appendix A). *Tier 1* notice for violations or situations with significant potential to have serious adverse effects on human health as a result of short-term exposure; *Tier 2* notice for all other violations or situations with potential to have serious adverse effects on human health; and *Tier 3* notice for all other violations and situations not included in Tier 1 and Tier 2.
1414(c)(2)(C)(iii), Notice must be provided to Administrator or primacy agency.	(§ 141.31(d)) System must provide a copy of the notice to the State within 10 days.	(§ 141.31(d)) Revised to require PWS to submit to the primacy agency within 10 days a certification, with copies of the notices, for both the initial notice cycle and all repeat notice cycles. (§§ 141.202(b)(2) and 141.203(b)(3)) New sections added to require consultation with primacy agency within 24 hours for violations or situations requiring a Tier 1 notice and for violations of the turbidity MCL of 5 NTU or a treatment technique resulting from a single exceedance of turbidity limits.
1414(c)(2)(C)(1), For violations with potential to have serious adverse effects on human health as a result of short-term exposure, notice must be distributed as soon as practicable but no later than 24 hours after the occurrence of the violation.	(§ 141.32(a)(1)(iii)(A)–(D) *Acute violations* include. (1) Any violations specified by State (2) Nitrate/nitrite MCLs (3) Fecal coliform/*E. coli* (4) Waterborne disease outbreak in unfiltered systems subject to Surface Water Treatment Rule.	(§ 141.202) *Tier 1 notice*—Violations and situations include those defined as acute in the current rule, plus: an expanded definition of waterborne disease outbreak to include all water systems and to add other waterborne emergencies; violations of the maximum turbidity limit where determined by the primacy agency or where consultation between the system and the primacy agency does not occur within 24 hours; chlorine dioxide MRDL violation under new DBP rule where samples taken in the distribution system exceed the standard or where repeat samples are not taken in the distribution system when required; violation of the testing procedures to determine if fecal coliform is present after any repeat sample tests positive for coliform; violations of combined nitrate and nitrite MCL; and failure to take a confirmation sample for nitrate within 24 hours when initial sample exceeds MCL.

TABLE B.—SUMMARY OF DIFFERENCES BETWEEN REVISED PN RULE AND CURRENT RULE—Continued

Statutory authority (SDWA, as amended in 1996)	Current rule (§ 141.32)	Revised PN rule (part 141, subpart Q)
		Under § 141.209, Tier 1 notice is also required for exceedance of the nitrate MCL by NCWS where permitted to exceed the MCL by the primacy agency.
	Provide copy of notice to radio and TV stations within 72 hours, or by posting or hand delivery within 72 hours. Posting must continue as long as the violation persists.	Timing revised to require notice within 24 hours; must use at a minimum electronic media, posting, hand delivery, or other method approved by the primacy agency, plus any additional methods necessary to reach all persons served.
	Additional notices: by newspaper within 14 days or posting or hand delivery if no newspaper is available; by mail within 45 days (may be waived if state determines violation has been corrected); and repeat notice every three months thereafter.	Revised to not require additional notices for same violation, deferring instead to the primacy agency to set additional requirements (including additional notices) on a case-by-case basis.
1414(c)(2)(D)(1), Regulations shall specify notification procedures for violations other than Tier 1; notice shall be in written form.	(§ 141.32)(a)) For MCL, treatment technique, and variance or exemption schedule violations.	(§ 141.203) *Tier 2 notice* includes those described in § 141.32(a) of the current rule, plus the new standards under the IESWTR and DBP rules, and serious and persistent monitoring and testing procedure violations, as determined by the primacy agency.
	By newspaper within 14 days or by posting or hand delivery if no newspaper is available.	Revised under § 141.203(b) to require notice within 30 days unless the primacy agency allows an extension of up to three months in appropriate circumstances. Extensions will not be allowed for any unresolved violations, nor will automatic ''across-the-board'' extensions for the remaining violations be allowed. Unless primacy agency directs otherwise, CWS must use mail or direct delivery, and other methods reasonably calculated to reach persons served. NCWS must use posting (for as long as violation persists or for at least seven days), direct delivery, or mail, and other methods reasonably calculated to reach persons served. Also requires systems to consult the primacy agency within 24 hours of learning of an exceedance of maximum turbidity limits.
	Additional notices: by mail within 45 days (may be waived if State determines violation has been corrected), and repeat notice every three months thereafter by mail or hand delivery.	The initial notice does not require multiple methods of delivery unless needed to reach persons served. Repeat notice required every three months where violation persists, unless the primacy agency determines less frequent repeat notice (no less frequent than annually) is warranted in appropriate circumstances. Primacy agencies may not allow less frequent repeat notices for microbiological violations, nor will automatic ''across-the-board'' decreases in frequency be allowed for the remaining violations. Method of delivery for repeat notice will be the same as that required for initial notices.
	(§ 141.32(b), For monitoring and testing procedure violations, and operation under variance or exemption.	(§ 141.204) The violations and situations requiring a *Tier 3 notice* are the same as those described in § 141.32(b) of current rule.
		Tier 3 notice is also required to announce the availability of unregulated contaminant monitoring results as required under § 141.207; and for exceedances of the SMCL for fluoride as required under § 141.208.

TABLE B.—SUMMARY OF DIFFERENCES BETWEEN REVISED PN RULE AND CURRENT RULE—Continued

Statutory authority (SDWA, as amended in 1996)	Current rule (§ 141.32)	Revised PN rule (part 141, subpart Q)
	By newspaper within three months of the violation or the granting of variance or exemption, or by hand delivery or posting if no newspaper is available. State may allow less frequent public notice (up to 1 year) for minor monitoring violations.	Revised to require notice within one year. Unless primacy agency directs otherwise, CWS must use mail or direct delivery, and other methods reasonably calculated to reach persons served. NCWS must use posting (for as long as violation persists or minimum of seven days), direct delivery, or mail, and other methods reasonably calculated to reach persons served. Consumer Confidence reports (CCRs) or other annual reports may be used, as long as notice in CCR meets PN requirements.
	Repeat notice every three months thereafter by mail or hand delivery.	Repeat notice annually; method of delivery must be the same as in the initial notice.
Notice to new billing units or new customers (not in statute).	(§ 141.32(c)) Community water system must give a copy of the most recent public notice for any outstanding violation of any MCL, any treatment technique requirement, or any V&E schedule.	(§ 141.206) Revised to require notice for *any* outstanding violation or situation requiring notice, including monitoring and testing procedure violations.
		Revised to require non-community water systems to keep notice posted for as long as violation persists, even if notice was initially hand-delivered or otherwise distributed.
1414(c)(2)(C)(ii) and 1414(c)(2)(D)(ii), Content of notices.	(§ 141.32(d)) Each notice must provide a clear explanation of the violation, potential health effects, population at risk, steps being taken to correct violation, telephone number of the owner, operator, or designee of the public water system, necessity for seeking alternative water supplies, if any, and any preventive measures consumers should take until the violation is corrected.	(§ 141.205) Adds ''when violation or situation was found'' and ''when system expects to return to compliance or resolve the situation'' to content elements. New requirement to include ''contaminant level.'' Adds name and business address to phone number of operator. Adds new element requiring standard language, where applicable, asking bill paying customers to provide copies of notice to other persons served who may not have received the notice directly from the PWS.
		Also, adds minimum content elements for notices of operation under variance or exemption, which parallel CCR requirements. No longer requires health effects language for operation under a variance or exemption.
	(§ 141.32(e)) Systems must include standard health effects language for MCL, treatment technique, variance or exemption schedule violations, and operation under a variance or exemption.	(New Appendix B) Revises standard health effects language, using language identical to the CCR rule.
		Adds standard language for monitoring and testing procedure violations.
Providing notice in other languages (not in statute).	(§ 141.32(d)) Systems must provide multilingual notices ''where appropriate''.	(§ 141.205(c)(2)) Revised to require that notices contain information in the appropriate language(s) regarding the importance of the notice or contain a telephone number or address so people can obtain a translated copy or request assistance in the appropriate language, if system serves a large proportion of non-English speaking consumers. Systems must determine what constitutes a ''large proportion'' if primacy agency does not make a determination.
Special notice for exceedance of Fluoride Secondary Maximum Contaminant Level (SMCL) (not in statute).	(§ 141.32(f)) Notice of SMCL exceedances between 2 mg/l and 4 mg/l (the MCL level) required within 12 mos.; shall contain language in § 143.5(b).	(§ 141.208) Moved to new Subpart Q (deletes § 143.5); mandatory language is simplified.
Special notice for exceedance of nitrate MCL for NCWS (not in statute).	Public notice is required as part of § 141.11(d). § 141.11(d) allows NCWS to have nitrate levels above MCL> (10 mg/l), up to 20 mg/l, if State approves and if they post and meet other conditions.	(§ 141.209) Incorporates public notice requirements in § 141.11(d) to new Subpart Q, requiring the PN to follow Tier 1 notice requirements and content requirements in § 141.205; changes § 141.11(d) to cross reference the Subpart Q PN requirement.

TABLE B.—SUMMARY OF DIFFERENCES BETWEEN REVISED PN RULE AND CURRENT RULE—Continued

Statutory authority (SDWA, as amended in 1996)	Current rule (§ 141.32)	Revised PN rule (part 141, subpart Q)
Public notice by primacy agency (not in statute).	(§ 141.32(g)) The State may give notice to the public on behalf of the public water system if the State complies with the requirements of § 141.32. However, the owner or operator of the public water system remains legally responsible.	(§ 141.210) No change.
1414(c)(2)(E) Administrator may require notice of levels of unregulated contaminants monitored under section 1445(a).	(§ 141.35(d)) Written notice of availability of results within three months after system receives results (surface water systems only need to notify after the first quarter of monitoring).	(§ 141.207) Revised to require notice of availability of results within 12 months, following Tier 3 delivery requirements; deletes § 141.35(d).
1414(c)(2)(B) States may establish alternative notification requirements.	(§ 142.10(a)) Authority to require public water systems to give public notice that is no less stringent than the EPA requirements in §§ 141.32 and 142.16(a).	(§ 142.10(a)) No change.
	(§ 142.16(a)) If the state chooses to decrease notice frequency for minor monitoring violations it must submit to EPA the criteria used to decide the decreased frequency and which violations are minor, and it must submit the new notice requirements.	(§ 142.16(a)) Deletes current requirement. Allows primacy agencies to establish alternative public notification requirements with respect to form and content of notice, consistent with 1414(c)(2)(B) of 1996 SDWA amendments, as long as they provide same type and amount of information. New § 142.16(a)(2) added to require State to include in primacy program enforceable requirements and procedures when State augments its program to take advantage of the flexibilities built into EPA's rule. List of special primacy requirements included in § 142.16(a)(2).

D. ''Plain Language'' Format of Final Rule

Today's Rule: As discussed in the preamble to the proposed rule, EPA has formatted Subpart Q of these regulations in question-and-answer format and made other changes in format and language, consistent with the requirements outlined in the June 1, 1998 memorandum sent by President Clinton to all Federal agencies, to take steps to improve both the clarity and comprehension of regulatory language. The intent of ''plain language'' is to produce rules which are clear, concise, straight-forward, understandable, and enforceable without extensive ''legalese.'' The current public notification rule, in particular, has been criticized by the General Accounting Office (GAO) and others as being too complex and confusing to implement. This criticism was viewed by GAO in its 1992 report as one of the reasons the public notification process is ineffective.

Comments Requested on Proposal: EPA requested comment on the new format and solicited ideas on ways to make the public notification regulation more readable by the regulated community. In general, commenters supported the new format, finding it a significant improvement from the current rule.

EPA Response to Comments: The final rule is consistent with the overall ''plain language'' strategy incorporated into the proposed rule. EPA has made minor formatting and language changes in response to specific comments that improve the overall presentation.

E. General Provisions of Final Rule (§ 141.201)

Today's final rule replaces the existing public notification regulation with an entirely new subpart (40 CFR Part 141, Subpart Q), which incorporates the new provisions under sections 1414(c)(1) and (c)(2) of the SDWA, as amended in 1996. The final rule streamlines the requirements to more effectively meet the objectives of the public notification process. Today's final rule revises the existing public notification requirements:

- To tailor the public notification requirements to address the potential risk from the violations, with particular focus on the notice for violations posing the greatest potential risk to public health;
- To simplify the requirements and make them more self-implementing, allowing water systems to understand and implement their public notification obligation without further interpretation;
- To give greater latitude to States to develop alternative programs to meet their unique needs and to provide greater flexibility to public water systems to tailor distribution of the notice to best reach persons served;
- To better integrate the public notification requirements for less serious violations with the annual Consumer Confidence Report (CCR) for community water systems and with other annual reporting mechanisms for non-community water systems; and
- To reduce the burden on water systems of complying with the public notification requirements.

1. Who Must Give Public Notice?

Today's Rule: The final rule under § 141.201(a) requires owners and operators of public water systems to give notice to persons they serve for all violations of national primary drinking water regulations (NPDWRs), when they are operating under a variance or exemption (or violate conditions of the variance or exemption), and for waterborne emergencies and other specified situations posing a potential risk to public health. The violation categories and other situations requiring a public notice are identified in the final rule in Table 1 to § 141.201 and Appendix A of Subpart Q.

The final rule makes several changes to the current public notice regulatory language to improve the clarity and understanding of when a public notice is required. Appendix A provides a complete reference guide (including regulatory citations) to all violations and situations requiring a public notice. Not all violations under the EPA drinking water regulations require a public notice. For instance, public notices are not required for violations of the reporting regulations under § 141.31 and other Part 141 sections. Public notices are also not required for violations of the Consumer Confidence Report regulations under Subpart O of Part 141. Appendix A will be updated as new NPDWRs are promulgated or when other situations arise where a public notice is required. A public notice is only required for the violations or other situations listed in Appendix A.

Several other changes were made to Table 1 to § 141.201 in today's rule modifying the violations and situations requiring a public notice:

• Special public notice provisions already required in the current regulations, but not included in the current public notification regulations under § 141.32, are added to the list of violations and situations requiring a public notice in Table 1 to § 141.201. These special public notice provisions include: The notice requirements for exceedance of the fluoride secondary maximum contaminant level (SMCL) under the existing § 143.5; the requirement to give notice of the availability of unregulated contaminant monitoring results originally found under § 141.35; and the public notice required of non-community water systems under the current § 141.11(d) for exceedances of the MCL of 10 mg/l for nitrate (up to 20 mg/l) without receiving a violation. These changes are discussed in Section IV.J of the preamble related to special public notices.

• The existing requirement to give notice for waterborne disease outbreaks under the Surface Water Treatment Rule is broadened and clarified to include a requirement for a public notice for any waterborne disease outbreak and other waterborne emergencies. This change is discussed in Section IV.F.1 of the preamble related to Tier 1 public notices.

• A new requirement is added that explicitly incorporates additional public notice requirements as determined by the primacy agency for other violations and situations not explicitly listed in Appendix A of Subpart Q. This enables the primacy agency to broaden the applicability of the public notice regulation to any situation it deems important.

Comments Requested on Proposal: EPA asked for comment on the proposal to add explicit regulatory language enabling the primacy agency to require public notification for other situations it believes have the potential for serious health risk. EPA also asked for comment on its proposal to present in tabular form all the situations requiring a public notice and its plans to update Appendix A as new rules are published. In general, commenters strongly supported the addition of Appendix A to the revised regulation and the flexibility explicitly allowed the primacy agency to require public notices beyond those listed in Appendix A.

EPA Response to Comments: The final rule is consistent with what was proposed. Other than several minor formatting and wording changes to improve the presentation, the only significant change to what was proposed was to revise the proposed Table 1 to § 141.201(a) to conform to the changes made in other sections of the rule. Table 1 to § 141.201(a) now includes other situations requiring a Tier 1 notice under § 141.202(a) that were added in response to comments. These changes to the Tier 1 requirements are discussed in Sections IV.F.1 and IV.J of the preamble.

2. What Type of Public Notice Is Required for Each Situation?

Today's Rule: The final rule under § 141.201(b) divides the public notice requirements into three tiers:

• Tier 1 Public Notice, for violations and situations with significant potential to have serious adverse effects on human health as a result of short-term exposure;

• Tier 2 Public Notice, for other violations and situations with potential to have serious adverse effects on human health; and

• Tier 3 Public Notice, for all other violations and situations requiring a public notice not included in Tier 1 and Tier 2.

The form, manner, and frequency of the public notice is determined by the tier to which the violation or situation is assigned. Appendix A assigns each violation and situation to one of the three tiers. The specific requirements for the public notice in each tier are defined under §§ 141.202, 141.203, and 141.204.

EPA is establishing the three-tier approach to public notification to be consistent with the intent of the new public notification provisions in the 1996 SDWA amendments. Section 1414(c)(2)(A) directs the Administrator to issue regulations that provide for different frequencies of notice based on the differences between intermittent and persistent violations and the seriousness of any potential adverse health effects. Section 1414(c)(2)(C) sets very specific requirements for violations with the potential to have serious adverse effects on human health from short-term exposure. This includes a new requirement that such notices be distributed to persons served no later than 24 hours after the occurrence of the violation. Section 1414(c)(2)(D) requires EPA to define in its regulations the notification procedures for all violations not included under subparagraph (C). This section requires that such procedures specify that the water system provide written notice to each person served in either: (1) The first bill prepared, if any, after the violation; (2) in an annual report issued no later than one year after the violation; or (3) by mail or direct delivery as soon as practicable, but no later than one year after the violation.

Comments Requested on Proposal: EPA requested comment on whether a two-or three-tiered structure would be more appropriate for the final EPA regulation and what the advantages and disadvantages of the preferred tier structure would be. All but three of the twenty commenters supported the three-tier structure.

EPA Response to Comments: EPA made no changes in the final rule to what was proposed under Section 141.201(b). In response to the three commenters preferring a two-tier notice structure, EPA believes that a three-tier approach is more appropriate than a two-tier approach because it provides more effective tailoring of the public notice requirements based on the seriousness of any potential health effects and is still relatively simple and straightforward to implement. Violations span a wide range of potential health risks. A ''middle-tier'' public notice requirement between the 24-hour notice and the annual notice is appropriate for those lower-tier violations and situations that may have the potential for serious adverse effects on human health, but are not significant or urgent enough to require an emergency notice. EPA believes a three-tier system of public notification effectively separates the form, manner, content, and frequency of public notice based on the seriousness of any potential adverse health effects. The three-tier system also meets the clear objectives and purposes of public notification, is simple and straightforward to implement, and meets the requirements of the statute.

3. Who Must Be Notified?

Today's Rule: The final rule under § 141.201(c) requires that each public water system provide public notice to persons served by the water system. EPA believes that consumers have a right to know in a timely manner whenever violations occur that may affect them, to allow them to make their own choices about using drinking water, based on their own perceived risk. This is consistent with the statutory requirement under the SDWA, which requires that public notice be provided to ''the persons served by the system.'' (SDWA, Section 1414(c)(1)). In response to comments on the proposal, EPA in the final rule has clarified the requirement in three ways.

First, EPA interprets the obligation of the water system to reach persons served to extend beyond bill-paying customers and service connections to all consumers of the system's drinking water. This is defined in the final rule to require that water systems provide the notice in a form and manner ''reasonably calculated to reach persons served.'' EPA recognizes that reaching the persons served beyond the bill-paying customers and service connections may pose a challenge to some water systems. Some consumers (such as apartment dwellers, other renters, university students, prison inmates, and condominium residents) may not be the persons paying the water bill or be otherwise linked to the service connection address. The form and manner of the public notice necessary to reach all the persons served depends on the local situation. To illustrate how EPA interprets the breadth of this obligation, EPA has added examples in the rule language under §§ 141.202(c), 141.203(c), and 141.204(c) outlining what additional efforts it expects of public water systems to reach persons other than the bill-payers or the service connection addresses.

EPA has also added standard language under § 141.205(d)(3) for water systems to use in their public notices (where applicable) to encourage those receiving the notice to distribute it to other persons who may drink the water. Examples where the use of this standard distribution language would apply include notices that are sent to apartment and condominium managers, building managers or physical plant superintendents, or others who receive the notice who provide drinking water to others.

Second, language under § 141.201(c)(a)(1) has been added to define the public notice obligation of public water systems that sell or otherwise provide drinking water to other public water systems. These ''parent'' systems are responsible for providing public notice of the violation or situation to the owner or operator of the ''consecutive'' systems to whom they sell water, but they are not required under the rule to distribute the notice to persons served by the consecutive system. Although different public notice arrangements are sometimes made between the parent and consecutive system, the consecutive system is the water system responsible under this rule for delivering the notice to the persons it serves. Although the legal obligation is clear under the rule, EPA recommends that each consecutive water system in its contract with the parent system agree on the most effective approach for distributing public notices. EPA will give examples of such agreements in the Public Notification Handbook.

Third, language under § 141.201(c)(2) has been added to enable the primacy agency, at its option, to make exceptions to the system-wide notice requirement if specific regulatory criteria are met. The new language will allow a water system to limit distribution of the notice to those persons served by a portion of the distribution system impacted by the violation, where the water system is able to demonstrate that the affected portion of the system is physically or hydraulically isolated from all other parts of the distribution system. This replaces the more limited discretion given to primacy agencies in the current rule, which allows less than system-wide notice for violation of EPA's chemical standards only when the elevated contaminant levels are contained in a separable portion of the distribution system with no interconnections. Today's rule broadens the allowable exceptions to a system-wide notice by adding ''hydraulically isolated'' to the exception criteria. Although not open-ended, the amended language recognizes situations other than physical separation where there is clear and certain evidence that persons served by a portion of the distribution system have no chance of being affected by the violation.

To meet EPA's criterion that a portion of the distribution system must be physically isolated to be eligible for an exception to the system-wide notice requirement, a system must show the primacy agency that the affected portion is separated from other parts of the distribution system with no interconnections. Because of the physical separation, the elevated contaminant levels contained in only that portion of the system would have no bearing on the contaminant levels in other parts of the system. In such a situation, EPA believes a primacy agency may permit an exception to system-wide notice. These exceptions to system-wide notice are already allowed in the current rule for violations of the chemical standards under §§ 141.23(i)(4), 141.24(f)(15)(iii), and (h)(11)(iii). Today's rule incorporates this exception criteria into § 141.201(c)(2).

To meet EPA's criterion that a portion of the distribution system must be hydraulically isolated to be eligible for an exception to the system-wide notice requirement, a system must show that the water in the affected portion is separated from the water in all other parts of the distribution system because the projected water flow patterns and water pressure zones effectively isolate the water to that portion of the system. This hydraulic isolation can result from the design of the distribution system (*e.g.,* pressure zones, backflow prevention devices) or be created through system operation (*e.g.,* flow control). An example associated with the Total Coliform Rule is the presence of *E. coli* downstream from a pipe break that the system can demonstrate, to the satisfaction of the primacy agency, led to the entry of fecal contamination, and that the water downstream from the break does not flow into any other part of the distribution system. Another example, related to a chemical standard (*e.g.,* nitrate, fluoride), is a situation where contaminant levels exceeding the MCL are shown to be from a single source and found only in the distribution main leading from that source. The water system in this situation may be eligible for an exception if it could demonstrate, using other monitoring information and distribution flow modeling, that exceedances above the MCL could only be found in the single distribution main because of water flow patterns and pressure zones (the ''hydraulics'') under all operational scenarios. For both of these examples, the decision on whether to permit an exception to the system-wide notice requirement rests solely with the primacy agency.

Primacy agencies seeking authority to grant exceptions to the system-wide notice requirement must meet the special primacy conditions under § 142.16(a)(2) in their approved primacy program. Decisions by the primacy agency to permit exceptions must be in writing and otherwise documented based on use of the regulatory criteria in today's rule. EPA recognizes that there are other situations where the water system has evidence that not all the

persons served by the system are affected equally by the violation. In these situations, EPA expects the water system to tailor the language in the public notice its sends system-wide, to communicate who is at most risk from the violation and who is at minimal risk. All such notices, unless the water system is granted an exception by the primacy agency, are required to be distributed system-wide according to the requirements in this part.

Comments Requested on Proposal: EPA asked for comments on its interpretation of who must be notified under the SDWA and the proposed rule. A substantial number of commenters recommended that EPA allow exceptions to the proposed (and current) requirement that the notice go to persons served by the entire system, particularly where it is clear that only a portion of the persons served are affected by the violation. Other commenters asked EPA to clarify how far the water system must go to ensure that its notice reaches all persons served.

EPA Response to Comments: The final rule reaffirms the statutory language that water systems provide the public notice to persons served by the entire system. In response to comments, however, the final rule now includes language enabling the primacy agency, at its option, to make exceptions to the system-wide notice requirement where the violation is shown to be due to exceedances in a portion of the system that is physically or hydraulically isolated from the rest of the system. EPA also added language in the final rule to respond to requests that EPA clarify public notice responsibilities for persons selling water to other water systems (*i.e.,* ''consecutive systems'').

Several commenters requested that EPA change the distribution requirement from ''persons served by the system'' to ''persons affected,'' to allow less than system-wide notice where the available evidence indicates that the violation affects only a portion of the persons served by the system. EPA disagrees with changing the baseline requirement to distribute notices of all violations system-wide, because EPA strongly believes that consumers have a right-to-know in a timely manner when violations occur that may affect them. In situations where evidence indicates that not all persons served are affected equally by the violation, EPA expects the water system to tailor the language in the public notice to communicate who is at most risk and what actions they should take, not to limit the notice distribution based on relative risk. EPA does agree, however, that exceptions to the system-wide notice distribution may be warranted when the contaminant exceedances are shown to be contained exclusively in an isolated portion of the distribution system. In such a situation, only those persons served by that portion of the system are affected. Accordingly, EPA has added language in the final rule allowing the primacy agency to grant exceptions, at its option, where the violation is shown to be due to exceedances in a portion of the system that is physically or hydraulically isolated from the rest of the system.

Several other commenters gave examples of situations where they believed a system-wide notice is unwarranted. EPA believes the language added in the final rule effectively addresses these comments by allowing exceptions to the system-wide requirement, at the primacy agencies discretion, when the system can demonstrate that specific engineering and hydraulic criteria are met. EPA's intent in adding the language is explained earlier in this preamble section. EPA's detailed response to specific comments on this provision is contained in the ''Response to Comments'' document contained in the docket for this rule.

F. Form, Manner, and Frequency of the Tier 1 Public Notice: Violations and Situations With Significant Potential to Have Serious Adverse Effects on Human Health as a Result of Short-Term Exposure (§ 141.202)

1. Tier 1 Violations and Situations

Today's Rule: The final rule under § 141.202(a) requires a Tier 1 public notice for specific violation categories and other situations. The list of violations requiring a Tier 1 public notice in today's rule includes all violations in the current rule defined as posing acute health effects. In addition, a number of new violations and situations have been added to those already required under the current regulation. Tier 1 notice requirements under the final rule are required for:

- Violation of the MCL for total coliform, when fecal coliform or *E. coli* are present in the water distribution system, or when the water system fails to test for fecal coliforms or *E. coli* after any repeat sample tests positive for coliform. Failure to test for fecal coliform or *E. coli* is not defined as an acute violation requiring a 72-hour notice in the current rule.
- Violation of the MCL for nitrate, nitrite, or total nitrate and nitrite, or when a water system fails to take a confirmation sample within 24 hours of the system's receipt of the first sample showing exceedance of the nitrate or nitrite MCL. Violation of the total nitrate and nitrite MCL and the failure to take a required confirmation sample are not defined as acute violations in the current rule.
- Exceedance of the nitrate MCL by non-community water systems (NCWSs), where permitted to exceed the MCL by the primacy agency under the criteria established under § 141.11(d). The authority given by primacy agencies under § 141.11(d) to allow NCWS to exceed the MCL level of 10 mg/l (up to 20 mg/l) is unchanged by today's action. The final public notification rule incorporates the public notice requirements for qualifying NCWSs into a new special public notice under § 141.209. Qualifying NCWS must follow the Tier 1 notice requirements. This existing requirement is not explicitly incorporated into the current public notice rule.
- Violation of the MRDL for chlorine dioxide, where one or more samples taken in the distribution system the day following an exceedance of the MRDL at the entrance of the distribution system exceed the MRDL. A Tier 1 notice is also required when the water system does not take required samples in the distribution system. These are new Tier 1 notice requirements incorporated from the Stage 1 D/DBP rule published on December 16, 1998 (63 FR 69390).
- Violation of the turbidity MCL under § 141.13(b) or a violation of the SWTR and IESWTR treatment technique requirements resulting from a single exceedance of the maximum allowable turbidity level, where the primacy agency determines after consultation initiated by the water system that a Tier 1 public notice is required. Violations resulting from exceedance of these turbidity limits will routinely require a Tier 2 notice except where the primacy agency determines, after consultation, that a Tier 1 notice is required for the specific situation. The consultation requirement under § 141.203(b)(3) is triggered whenever these specific turbidity violations occur. Consultation must take place as soon as practical but no later than 24 hours after the violation is known. If the water system is unable to consult with the primacy agency within the 24-hour period, the public notice requirement is automatically elevated to a Tier 1. Where the notice requirement is elevated to a Tier 1, the public water system must distribute the notice as soon as practical but no later than the subsequent 24-hour period after the Tier 1 requirement is known (*i.e.,* no later than 48 hours after the

public water system first learns of the violation). This provision is not included in the current rule.

• Occurrence of a waterborne disease outbreak, as defined in Section 141.2, and other waterborne emergencies. This is an expanded Tier 1 notice requirement from that required under the current rule, which is limited to outbreaks related to violations of the Surface Water Treatment Rule for unfiltered systems. Today's final rule adds an explicit reference to § 141.2 to clarify the definition of waterborne disease outbreaks requiring a Tier 1 public notice. The following definition of a waterborne disease outbreak is in § 141.2:

> Waterborne disease outbreak means the significant occurrence of acute infectious illness, epidemiologically associated with the ingestion of water from a public water system which is deficient in treatment, as determined by the appropriate local or state agency.

Today's final rule also adds ''other waterborne emergencies'' to the list of situations requiring a public notice. The definition of ''waterborne emergency'' is illustrated in the final rule by example, but EPA's intent is to have the Tier 1 public notice requirement apply to any waterborne emergency (whether a violation or not) with significant potential to pose adverse health effects from short-term exposure. The examples in the final rule to illustrate this include, but are not limited to: Failure or significant interruption in key water treatment processes, a natural disaster that disrupts the water supply or distribution system, or a chemical spill or unexpected loading of possible pathogens into the source water that significantly increases the potential for drinking water contamination.

• Other violations or situations with significant potential to have serious adverse health effects from short-term exposure, as determined by the primacy agency. This enables the primacy agency to elevate to Tier 1 other violations and situations not specifically identified as requiring a Tier 1 notice in Appendix A, when necessary to protect public health. The final rule allows the primacy agency to elevate either violations or situations; the current rule applies only to ''violations.''

EPA has limited its list of violations and situations routinely requiring a Tier 1 notice to those with a significant potential for serious adverse health effects from short-term exposure. There are other serious violations which may indicate a potential for adverse health effects from short-term exposure in specific circumstances. But EPA did not designate these other violations as automatically requiring a Tier 1 notice because they represent exceedances of indicator parameters which are not strongly or consistently linked to the occurrence of the possible acute health effects. Most routine Total Coliform Rule (TCR) MCL violations and Surface Water Treatment Rule (SWTR) TT violations would fall into this category. These violations are included in the Tier 2 list. EPA believes focusing the 24-hour notice requirement in its rule on the more limited set of violations will increase the effectiveness of the Tier 1 notices and lead to greater health protection. When a specific violation or situation clearly warrants a Tier 1 notice based on the strength of the evidence, EPA expects the primacy agency to use its discretion to elevate the notice requirement to Tier 1. Use of this discretion is authorized under the final EPA rule to ensure that the public is effectively informed of these violations and situations not explicitly listed by EPA as requiring a Tier 1 notice.

EPA decided to include violations resulting from exceedance of the maximum allowable turbidity limit in its Tier 1 list of violations under Table 1 to § 141.202, but Tier 1 would only apply when the primacy agency directs such a notice after consultation with the public water system. This was because EPA believes that violations resulting from an exceedance of the maximum allowable turbidity limit may be an indicator that there is significant potential of adverse health effects from short-term exposure. There is a strong possibility of serious consequences to public health if the public is not alerted quickly when pathogens have passed through to the drinking water. However, EPA does not believe that all such turbidity excursions should prompt a Tier 1 notice, thus justifying a new requirement that the system consult with the primacy agency within 24 hours to determine whether the specific situation warrants a Tier 1 notice. Requiring immediate consultation with the primacy agency will ensure that Tier 1 notices will be required when supported by the evidence. Requiring consultation rather than an automatic Tier 1 notice also avoids unnecessary and costly notices. When consultation with the primacy agency does not occur within 24 hours, the final rule automatically requires that a Tier 1 notice be distributed.

EPA expects that some of the routine violations related to turbidity exceedances should require a Tier 2 (not a Tier 1) notice because a turbidity exceedance by itself, without other supporting information, has not been shown to date to be a predictable indicator of a pathogen loading in the finished water. A single exceedance of the maximum allowable turbidity limit, although a violation, may also prove to be a false reading because of a testing equipment malfunction. EPA is continuing research on turbidity as an indicator of pathogen loading as part of the development of the Long Term Enhanced Surface Water Treatment Rule. Given the relatively small number of single exceedance turbidity violations (estimated at less than 200 per year), the additional primacy agency workload for consultation should not be overly burdensome. The final rule provides the best balance between getting a notice out quickly to protect public health and avoiding unnecessary alarm and confusion through issuance of unnecessary notices.

Comments Requested on Proposal: EPA requested comment on its proposed list of violations and situations requiring Tier 1 public notification. EPA received a range of comments recommending changes to the proposed list.

First, many commenters specifically focused on those proposed Tier 2 violations which may in some circumstances pose a significant and immediate risk from short-term exposure, specifically violations of the TCR and SWTR/IESWTR. In particular, over half of these commenters recommended that turbidity excursions resulting in a violation be automatically elevated to a Tier 1 notice because they believed that turbidity violations were more often than not a strong indicator of harmful drinking water posing a significant risk from short-term exposure. The rest of those commenting on this issue specifically supported leaving all turbidity violations in Tier 2 (as was proposed) because they believed that turbidity violations were more often than not a false indicator of potential health risk. Virtually all the commenters agreed that turbidity was useful as an indicator to trigger immediate follow-up by the water system.

Second, commenters asked EPA to be more precise in defining which violations or situations required a Tier 1 notice. In particular, commenters asked EPA to better define when EPA intended a Tier 1 notice to be triggered for a waterborne disease outbreak, to clarify when failure to test for fecal coliform required a Tier 1 notice, and to better specify which chlorine dioxide violations required a Tier 1 notice.

Third, several commenters requested that EPA provide more explicit criteria for when EPA intended for the primacy agency to elevate other violations and

situations not explicitly listed in the EPA rule to a Tier 1 notice.

EPA Response to Comments: The final rule reflects several substantive changes to what EPA proposed, based on comments received on the proposal. In response to comments recommending that the proposal be changed to require that all TCR MCL violations and all SWTR TT violations require a Tier 1 notice because of their potential risk from short-term exposure, EPA decided to stay with the Tier 2 requirement as proposed. EPA believes that an automatic Tier 1 notice requirement is not justified because routine TCR and SWTR violations (without supporting evidence) are not sufficiently strong or predictable indicators of significant potential of risk from short-term exposure. Routine TCR violations with no evidence of fecal contamination clearly do not provide sufficient evidence indicating significant potential of short-term health risk. Routine violations of the treatment technique requirements under the SWTR and IESWTR do provide an indication of problems with disinfection or filtration treatment, but they are not in themselves sufficient evidence indicating significant potential of short-term health risk.

In response to the range of comments related to the appropriate tier level for turbidity violations, EPA agrees that certain exceedances of the turbidity limit deserve special attention in the final rule. Accordingly, EPA has added language in the final rule addressing this specific situation. For the reasons outlined earlier in this section, the final rule: Continues to classify all turbidity violations as Tier 2; adds a new requirement that PWSs consult with their primacy agency within 24 hours when exceedances of the maximum allowable turbidity limit occur; enables the primacy agency after the consultation to elevate specific turbidity violations to Tier 1 when warranted; and requires an automatic Tier 1 notice when consultation does not take place within the 24-hour period. Since the significance of the risk to health of an exceedance of the turbidity limit is situational, EPA believes the final rule ensures that Tier 1 notices will go out quickly when necessary (based on the immediate consultation requirement) while avoiding unnecessary notices where the violation poses no risk to health.

In response to comments asking that EPA clarify the violations and situations requiring a Tier 1 notice, EPA agrees and has added language in Table 1 to § 141.202 of the final rule to more precisely define when a Tier 1 notice is required. In response to specific comments, EPA also added several new Tier 1 categories to Table 1 to ensure that Table 1 accurately and completely lists all the violations and situations where a Tier 1 notice is required. In addition, the final Table 1 list incorporates two existing public notice requirements not explicitly referenced as Tier 1 requirements under the proposal: The notice required under § 141.11(d) for those NCWS allowed by the primacy agency to exceed the nitrate standard; and the notice required under § 141.23(f)(2) when a system fails to take a nitrate confirmation sample after the initial sample showed an exceedance of the MCL. These changes incorporated existing requirements currently found in other sections of the CFR. Finally, changes were made in the final rule language to broaden the definition of waterborne disease outbreak by adding other waterborne emergencies and making minor changes in the language related to failure to test for fecal coliform and chlorine dioxide violations to clarify when the Tier 1 notice is required.

In response to comments asking for more explicit criteria to guide primacy agencies on when to elevate other violations and situations to the Tier 1 list, EPA has decided not to specify additional criteria in the final rule. EPA believes that the primacy agency needs wide latitude to access individual situations based on the regulatory definition of the Tier 1 notice under § 141.201(b). EPA also encourages public water systems to use the Tier 1 notice protocols whenever a violation or situation has significant potential to pose adverse health effects from short-term exposure. Since time is of the essence to protect public health in such situations, public water systems should act quickly to notify persons served, without waiting for direction from the primacy agency. EPA will shortly be issuing the final Public Notification Handbook and the Public Notification Primacy Guidance, which will offer examples of other situations where it believes a Tier 1 notice may be necessary.

2. Timing of the Tier 1 Public Notice (and Consultation Requirement)

Today's Rule: The final rule under § 141.202(b) requires that a Tier 1 public notice be provided by the public water system as soon as possible but no later than 24 hours after the system learns of the violation. The public water system is also required to initiate consultation with the primacy agency within that same 24-hour period and comply with whatever subsequent public notification requirements are established during that consultation.

The timing and process established for the Tier 1 public notice in the final rule is significantly different from the current rule.

- First, the public water system is required to distribute the notice within 24 hours (as required under Section 1414(c)(2)(C)(i) of the SDWA), rather than within 72 hours required in the current rule. This is a statutory obligation for such violations under the 1996 SDWA amendments. EPA interprets the statute under Section 1414(c)(2)(C)(i) to require this initial public notice within the first 24 hours to apply regardless of when the consultation with the primacy agency takes place.
- Second, the final rule sets a new requirement that the water system consult with the primacy agency to determine subsequent public notification requirements. EPA interprets the statute under Section 1414(c)(2)(C)(iii) and (C)(iv) to require that the public water system consult with the primacy agency within the first 24 hours after the violation becomes known to the water system, to determine subsequent public notice requirements (*e.g.,* repeat notice frequencies, form and manner of subsequent notice, *etc.*). In contrast, the current rule sets the subsequent public notice requirements in the rule itself, rather than on a case-by-case basis as a result of consultation with the primacy agency.

The final rule identifies a number of elements which may be covered during the consultation, including the timing, form, manner, frequency, and content of subsequent notices, the duration of the notice when posted, and other actions reasonably calculated to ensure the notice is provided to persons served. Additional notices may be necessary to reach other persons served who may not have seen the initial notice and to reaffirm the seriousness of the public health risk from drinking the water. EPA also believes, but does not require in the final rule, that a supplemental notice to announce that the violation has been resolved and the risk from the drinking water has been abated is an effective way to bring closure to the emergency situation. The decision on when to require subsequent notices can best be handled by the primacy agency on a case-by-case basis in consultation with the public water system.

Comments Requested on Proposal: EPA requested comment on the new requirement for a 24-hour notice for Tier 1 public notices and the new consultation process within the same

24-hour period proposed in lieu of more prescriptive EPA requirements. EPA also asked for comment on its interpretation of the statute under Section 1414(c)(2)(C), which allows EPA to require public water systems to consult with the primacy agency. EPA received many comments on the new 24-hour notice requirement, ranging from support of the new requirement to a request that the final rule give water systems (or the primacy agency) flexibility to allow more than 24 hours when necessary to produce an effective notice. Some commenters supported maintaining the 72-hour requirement in the current rule, others thought that 24 hours was too long a period. Many other comments were received requesting clarification of when the 24-hour clock would start.

EPA Response to Comments: In response to comments received, EPA made minor changes in rule language to what was proposed, primarily to clarify EPA's intention. In response to comments that the 24-hour deadline be increased or decreased, EPA has decided to maintain the proposed period because of the clear statutory language and intent under the 1996 SDWA amendments. As described in the preamble to the proposed rule, in setting the deadline for Tier 1 notification, EPA was limited by the provisions of the Safe Drinking Water Act (1414(c)(2)(C)(i)), which allow a maximum of 24 hours for violations with the potential to cause serious health effects as a result of short-term exposure.

In response to questions about when EPA intended the 24-hour clock to begin, EPA wants to reaffirm the language in the proposal:'' * * * as soon as possible but no later than 24 hours after the system learns of the violation.'' EPA believes it is important to hold the PWS responsible for learning about a violation and the actions it is required to take. Accounting in the rule for every way in which a system could learn of a violation would make the rule overly complicated. EPA wishes to restate that the trigger point for notification is when the system learns that the violation has occurred, not at the point when a system expects that a violation will occur (*e.g.,* when the presence of coliform is discovered and the system is awaiting the results of a confirmation sample). If systems use an independent laboratory, this means that the 24-hour clock starts when the laboratory reports to the public water system the analytical results that indicate a violation has occurred. To get the notice out as soon as practical but no later than 24 hours, EPA encourages systems to ''gear up'' in advance for preparing a notice. EPA recommends that public water systems review the public notification requirements for each violation type and develop a fill-in-the-blank Tier 1 notice based on the templates to be issued with the final Public Notification Handbook.

In response to comments on the proposed new consultation requirement under § 141.202(b)(2) and (b)(3), EPA has decided to retain the language as proposed. Some commenters requested that the consultation deadline be changed from 24 hours to the end of the next business day. Even though the public water system is required to distribute the notice to persons served within 24 hours whether or not consultation occurs, EPA believes that any delay in getting the primacy agency involved is unwarranted given the seriousness of the Tier 1 situation. Other commenters asked for clarification of the term ''initiate consultation,'' particularly when the water system is unable to contact the State within the 24-hour period. EPA intends the phrase ''initiate consultation'' to require, at a minimum, that the system take active steps to contact the primacy agency. EPA and most States now have voice mail or an emergency hotline, so public water systems should always be able to leave a message indicating that an attempt at initiating consultation was made. EPA recognizes that full and complete consultation may not be possible if the primacy agency is unavailable. EPA plans to work with States during the primacy revision process to augment the States' capability to respond on a 24-hour basis to potential Tier 1 notice situations.

Finally, several commenters believed that the proposed requirement under § 141.202(b)(3) to comply with any additional notice requirements resulting from the consultation was too vague and open-ended. In response, EPA intends that the primacy agency have broad-based discretion to respond to the specific situation. Authorizing the primacy agency to respond appropriately to the specific situation will strengthen the public notice response to situations posing significant potential of short-term risk to health.

3. Form and Manner of the Delivery of the Tier 1 Notice

Today's Rule: The final rule, under § 141.202(c), allows the public water system some flexibility in choosing the specific method of delivery to distribute the notice. This is significantly different from the current rule, which requires that an initial notice be provided in all cases by electronic media and that subsequent notices be delivered first by newspaper and later on by mail. The final rule does require water systems to use, at a minimum, at least one of the following delivery methods: appropriate broadcast media, posting of the notice in conspicuous locations, hand delivery, or another minimum delivery method specified in writing by the primacy agency. It also establishes an enforceable performance standard, requiring the water system to use delivery methods reasonably calculated to reach all other persons not reached by the minimum method within the 24-hour period, including all residential, transient, and non-transient users of the water.

Comments Requested on Proposal: EPA requested comment on the revised requirements defining the form and manner of the Tier 1 notices. Many commenters believed that the proposed list of minimum methods was too limiting, and that other methods should be added to this minimum list to give water systems greater choice. Other commenters requested that the final rule require water systems to use more than one minimum method, since one method in many cases would not reach all persons served. Several commenters felt that the use of a performance standard (''take steps reasonably calculated to reach all persons served''), in lieu of additional listed methods to reach others not covered by the minimum method, gave water systems too much flexibility.

EPA Response to Comments: EPA made one substantive change and made other edits to the language in § 141.202(c), in response to the comments received on the proposal. Based on comments received, the final rule added a fourth item to the list of minimum forms of notice delivery, which authorizes the primacy agency to approve in writing the use of a substitute delivery method not already listed in EPA's rule. The proposed rule did not give the primacy agency the discretion to allow use of methods other than those explicitly listed under § 141.202(c). EPA agrees with the commenters that the proposed minimum list of delivery methods (broadcast media, posting, and hand delivery) was too limiting and potentially inappropriate to some Tier 1 situations.

Commenters recommended adding a wide variety of delivery methods to the minimum list, including newspaper, postal patron mailing, e-mail, or priority mail. EPA believes the best response to these comments is to allow primacy agencies to substitute methods other than those listed to fit the specific

situation, because no single list will fit all situations.

Other commenters believed EPA should require that more than one minimum delivery method be used. EPA disagrees. Using one of the listed minimum methods, coupled with the requirement that the system take steps ''reasonably calculated to reach all persons served'' ensures that additional methods are employed where necessary. Although additional methods are not always required, EPA expects that most community water systems will need to use more than one method of delivery to effectively reach all persons served. In contrast, one method may be adequate for many very small community water systems or non-community systems to reach the persons they serve. In addition, the consultation with the primacy agency required for Tier 1 notices under § 141.202(b) is intended to be a backup where systems are unable or unwilling to comply fully with the requirement.

G. Form, Manner, and Frequency of the Tier 2 Public Notice: Other Violations With Potential To Have Serious Adverse Effects on Human Health (§ 141.203)

1. Tier 2 Violations and Situations

Today's Rule; The final rule under § 141.203(a) requires a Tier 2 public notice for the following violation categories and other situations:

- All violations of the MCL, MRDL, and treatment technique requirements, except where a Tier 1 notice is required under 141.202(a) or where the primacy agency determines a Tier 1 notice is required;
- Violations of the monitoring and testing procedure requirements where the primacy agency determines that a Tier 2 public notice is required; and
- Failure to comply with the terms and conditions of any existing variance or exemption in place.

The above list is similar to the list in the comparable section of the current rule, with three exceptions:

- First, the final rule sets the new public notice requirements for the Stage 1 Disinfectant/Disinfection Byproducts (D/DBP) Rule and the Interim Enhanced Surface Water Treatment Rule (63 FR 69389 and 69477, December 16, 1998). (Today's rule also amends the Consumer Confidence Report (CCR) regulations to define the CCR requirements for these new rules. See Section V of the preamble for discussion of the CCR rule changes included in today's rulemaking.)
- Second, the final rule enables the primacy agency, at its option, to elevate the public notice requirement for specific monitoring or testing procedure violations from a Tier 3 to a Tier 2 notice, taking into account the potential health impacts and the persistence of the violation. Unless the primacy agency determines otherwise, monitoring and testing procedure violations will be reported in a Tier 3 notice.
- Third, although the final rule continues to designate turbidity MCL and TT violations as Tier 2 (as in the current rule and as proposed), the final rule has added a new requirement under § 141.203(b)(3) that a public water system consult with the primacy agency within 24 hours after learning of the violation to determine whether the specific situation should be elevated to a Tier 1 notice.

Table 1 to § 141.202 explicitly authorizes the primacy agency, after consultation, to elevate to Tier 1 those violations related to exceedance of the maximum allowable turbidity level. When consultation does not take place within the 24-hour period, a Tier 1 notice is automatically required. The public water system must distribute the Tier 1 notice by the end of the next 24-hour period (or no later than 48 hours after the system learns of the violation). (See discussion in preamble under Section IV.F.1 related to Tier 1 notices and under Section IV.G.2 related to the turbidity consultation requirements.)

Comments Requested on Proposal: EPA requested comment on the list of violations included under Tier 2. Comments were also requested on an alternative option that would require a Tier 2 notice, rather than a Tier 3 notice, for all monitoring and testing procedure violations, unless the primacy agency explicitly allowed a Tier 3 notice. Many comments received on this section related to which of the violations proposed as requiring a Tier 2 notice should be elevated to Tier 1. The response to these comments is included in Section IV.F.1 of the preamble, related to Tier 1 requirements. Other than the Tier 1 issue, most of the comments supported the proposed list of violations as requiring a Tier 2 notice. A few of the commenters did, however, recommend that certain violations proposed as Tier 2 (*e.g.,* Lead and Copper Rule (LCR) treatment technique violations) be moved to Tier 3. Other commenters asked EPA to clarify and possibly add criteria for the situations in which EPA expects primacy agencies to elevate monitoring violations from a Tier 3 notice to a Tier 2 notice.

EPA's Response to Comments: EPA made no changes to the language in § 141.203(a) from what was proposed, based on comments received on the proposal. In response to comments recommending that LCR violations be moved to Tier 3, EPA has decided to leave the rule as proposed. For public health and right-to-know reasons, EPA believes that treatment technique violations deserve the same level of notice as MCL violations. LCR TT violations are an indicator of potential increased levels of lead or copper in drinking water. This is a significant public health issue for a large segment of the population and, for this reason, EPA believes that a Tier 3 notice is not appropriate. In response to comments that EPA specify additional criteria on when primacy agencies should elevate Tier 3 notices to Tier 2, EPA has decided not to add to the performance criteria in the proposal (''* * * taking into account health effects and the persistence of the violation * * *''). EPA intends that the primacy agency exercise broad discretion on when to elevate Tier 3 notices to Tier 2 as part of its approved primacy program. EPA plans to make recommendations on how to decide when to elevate violations to higher tiers in its guidance to primacy agencies on implementing the public notification rule.

2. Timing of the Tier 2 Public Notice

Today's Rule: The final rule under § 141.203(b)(1) requires the public water system to provide a Tier 2 public notice to persons served as soon as practical, but no later than 30 days after the system learns of the violation. Posted notices are required by the final rule to remain in place for as long as the violation or situation persists, but in no case for less than seven days, even if the violation or situation is resolved. The final rule under § 141.203(b)(2) also requires the public water system to repeat the notice every three months for as long as the violation persists. In contrast, the current rule requires a newspaper notice within 14 days, a notice mailed to all bill-payers within forty-five days, and a repeat notice mailed every three months thereafter until the violation is resolved.

The final rule gives the primacy agency discretion, in appropriate circumstances, to extend the time period allowed for the Tier 2 notice from 30 days to up to three months for the initial notice and to allow repeat notice less frequently than every three months (but no less than once per year). Permission must be granted in writing. Although the discretion given to the primacy agency is fairly broad, the final rule specifically disallows extensions of the 30-day deadline for the initial public notice for any unresolved violation. It also specifically disallows primacy

agencies from approving repeat notices less frequently than every three months for TCR, SWTR, and IESWTR TT violations. The final rule also does not allow primacy agencies to establish regulations or policies that automatically give ''across-the-board'' extensions or reductions in the repeat notice frequency for all the other violations.

EPA believes that giving the primacy agency discretion in appropriate circumstances to extend the initial notice beyond 30 days or to allow repeat notices less frequently than every three months is clearly warranted. The violation situations under Tier 2 are very diverse, ranging from violations that on some occasions may pose potential adverse health effects from short-term exposure (such as routine SWTR TT violations), to unresolved violations that pose chronic health effects from long-term exposure (such as benzene violations), and to resolved violations no longer posing any potential risk to health. One size does not fit all! An extension beyond 30 days may be appropriate for violations that were quickly resolved. An extension to three months may allow the water system to include the initial notice in the same mailing as the quarterly bill, with no loss in effectiveness.

As referred to earlier in Section IV.G.1 of the preamble, the final rule also establishes a new provision under § 141.203(b)(3) requiring public water systems to consult with the primacy agency within 24 hours of learning of a violation related to exceedance of the maximum allowable turbidity limit. Violation of the maximum allowable turbidity limit, when combined with other site-specific information, is an indication that pathogens may have passed through to the finished water. EPA is requiring consultation under the public notification rule so the primacy agency can determine whether to elevate the notice requirement to a Tier 1. Where consultation does not take place as required in the 24-hour period, a Tier 1 public notice requirement is automatically triggered and the public water system must distribute the notice within the next 24-hour period. The new consultation requirement overlaps with current SWTR regulations requiring public water systems to inform the primacy agency by the close of the next business day whenever turbidity levels exceed 5 NTU. Today's rule amends the current SWTR rule to eliminate the overlapping requirement. A discussion of this new provision, including why EPA established this new consultation requirement, is contained in Section IV.F.1 of the preamble.

Comments Requested on Proposal: EPA requested comment on the proposed 30-day time period required for the initial Tier 2 public notice, the requirement for a repeat notice of ongoing violations every three months, and the discretion given to the primacy agency in specific circumstances to extend the initial notice to three months or the repeat notice frequency to one year (either on a case-by-case basis or by rule). A broad range of comments were received on the proposed 30-day time period for the initial Tier 2 notice, ranging from leaving the current 14-day requirement intact (or even requiring the notice sooner), to support for the 30-day proposed period, or to moving the initial notice to 90 or 120 days after the violation. A significant minority of commenters objected to allowing the primacy agency any discretion to extend the Tier 2 deadlines, believing that such discretion made a more complex rule which could be used inappropriately to give public water systems longer notice periods than intended under the rule. Other commenters supported giving the primacy agency flexibility to extend the Tier 2 deadlines, but asked for clarification or offered alternatives to the proposed extension process.

EPA Response to Comments: After considering all the comments, EPA has decided to retain the proposed 30-day period for the initial notice and the 3-month repeat notice frequency in the final rule. But, in response to the large number of commenters requesting reconsideration or clarification of the proposed deadline extension, the final rule redefines how and when primacy agencies would be allowed to extend the initial notice beyond 30 days and under what circumstances the primacy agency would allow less frequent repeat notices for unresolved violations. The proposed rule would have allowed the primacy agency the discretion to deviate from the regulatory time period for ''specific circumstances'' as defined under the individual approved primacy programs. In § 141.203(b)(1) and (b)(2) of the final rule, EPA replaced the proposed criteria allowing extensions in ''specific circumstances'' with a list of the specific violation situations where the discretion to extend or allow less frequent repeat notice is prohibited.

In response to comments recommending that the Tier 2 deadline be set at 14 days or less, EPA believes the 30-day deadline will work most effectively because of the need to sharply differentiate the public health circumstances for violations requiring a Tier 2 notice from those requiring a Tier 1 notice. Routine violations in Tier 2 are not usually considered to pose a serious health risk from short-term exposure, thus immediate notification is not routinely needed to get people out of harm's way. The final rule recommends, however, that the notice be distributed as soon as practical, but sets the outer boundary at no longer than 30 days after the system learns of the violation. A violation that routinely requires a Tier 2 notice but for whatever reason poses elevated risk from short-term exposure may be elevated to Tier 1 at the discretion of the primacy agency.

EPA also disagrees with commenters recommending that the Tier 2 deadline be set at 90 or 120 days after the violation is known. EPA believes that a 30-day baseline period is appropriate and achievable for most Tier 2 violations and situations. A 30-day period is long enough after the violation for the system to gather the information needed to develop an effective notice and soon enough to meet the clear preference of many stakeholders to be informed as soon as practical after the violation. EPA believes setting a 90- or 120-day baseline period for the wide range of violations requiring a Tier 2 notice would threaten the public health and right-to-know objectives underpinning the public notification requirement. EPA does believe that there are situations where it is appropriate to extend the time frame for notification of some of these violations beyond 30 days, but these situations are the exception to the norm. The final rule addresses the exceptions to the 30-day deadline by enabling the primacy agency, at its option, to extend the deadline for the initial notice up to three months in appropriate circumstances.

In response to comments opposing any extension of the initial public notice period beyond 30 days, EPA believes that the violations and situations requiring a Tier 2 notice encompass a wide range of violations. One size does not fit all! Although EPA believes that the 30-day deadline is applicable for most Tier 2 situations, giving the primacy agency the discretion to extend the 30-day deadline gives the needed flexibility to respond to local situations. For example, an extension may be especially appropriate for violations that were quickly resolved and no longer pose a risk to public health, or where an extension may allow the water system to include the notice in the same mailing as a quarterly bill with no loss in effectiveness. At the same time, EPA has limited the primacy agency flexibility to grant extensions by prohibiting extensions for any unresolved violation. The final rule also does not allow primacy agencies to establish ''across-

the-board'' extensions for all violations through their rules and regulations. EPA will work with the States as they develop their primacy revision packages to reach agreement on how this flexibility will be used in their approved primacy program.

3. Form and Manner of the Delivery of the Tier 2 Notice

Today's Rule: The final rule under § 141.203(c) requires public water systems issuing Tier 2 notices to use one or more of the minimum methods specifically listed in the rule and to take other steps that are reasonably calculated to reach persons served in the required time period. The final rule significantly changes the requirements for delivery of the Tier 2 notice in the current rule. For example, the current rule (for community water systems) first requires a newspaper notice, followed by a notice either mailed or directly delivered to customers.

In contrast, the final rule requires that community water systems, at a minimum, mail or otherwise directly deliver the notice to each customer receiving a bill and to other service connections to which water is delivered. The requirement to deliver the notice to other service connections where water is delivered adds an obligation not explicit in the current rule. The final rule requires that non-community water systems, at a minimum, post the notice in conspicuous places or mail or directly deliver to each customer and service connection (if known). Beyond this regulatory minimum, all public water systems must take steps reasonably calculated to reach other persons served by the system who would not normally be reached by the minimum regulatory method. Examples where persons served may not be reached by the minimum method include: community water systems that provide drinking water to persons who do not pay a water bill (*e.g.,* students, renters, nursing home residents, prison inmates) and therefore would not routinely see a mailed notice; and non-community water systems with situations where persons who use the drinking water might not see the posted notice (*e.g.,* seasonal residents in a resort). The final rule also gives the primacy agency the option to prescribe a different method of delivery for the water system, based on policies and procedures established as part of its approved primacy program.

Comments Requested on Proposal: EPA requested comment on the revised requirements for the method of delivery of the Tier 2 public notice. Comments were also requested on an alternative option to the proposal on the method of delivery that would give the public water system discretion to select from a list the methods it would use, with no required minimum, to meet the overall performance standard. Many comments were received on the proposed list of minimum methods systems could choose from. Some commenters believed the minimum list should be expanded to allow, for instance, use of the newspaper as the minimum method, as in the current rule. Other commenters requested that the final rule require that water systems use more than one minimum method. Still other commenters recommended that the final rule add a requirement to consult with the primacy agency before selecting a method.

EPA Response to Comments: The final rule maintains the obligation that was proposed, requiring water systems to take steps beyond the specified minimum that are reasonably calculated to reach persons served by the system, whether they were bill-paying customers, other service connections where water is delivered, or other persons served. The final rule also includes two new requirements that were not in the proposal: delivery of repeat notices must follow the same requirements as the initial notice; and permission given by the primacy agency to deviate from the method of delivery presented in the final rule must be in writing.

In response to comments that the proposed list of minimum delivery methods be expanded, EPA believes no additions to the proposed minimum list are necessary, as the listed methods provide a good baseline for most systems in meeting the performance standard to reach all persons served. Beyond this regulatory minimum, water systems are obligated to use any other method reasonably calculated to reach other persons served by the system if they would not normally be reached by solely relying on the minimum regulatory method. Any other methods used would serve to enhance this minimum objective.

EPA disagrees that a newspaper notice should be explicitly listed as one of the minimum delivery methods, as it is in the current rule. EPA believes that a newspaper notice is beneficial as a supplemental method to mail or hand delivery, and it may be included in a water system's strategy to use media coverage to reach others not reached by mail or hand delivery. But newspaper notices are not as effective as mail or hand delivery in directly reaching persons served. Newspaper notices are typically placed in the legal notices section of the newspaper where they are not likely to be read. If newspapers are used as an additional method of delivery, EPA strongly recommends that systems purchase advertising space near the front of the newspaper, rather than placing a legal notice. EPA prefers that community water systems focus on methods that will get the notice in people's hands at their place of residence.

In response to comments requesting that EPA not set a minimum delivery method at all in the final rule, relying instead solely on a narrative performance standard, EPA believes that a list of minimum methods establishes a necessary baseline level of performance that is clear and simple to understand and implement. EPA agrees with these commenters on the importance of flexibility in the public notification process. However, EPA feels that the rule must specify basic minimum requirements in order to allow the rule to be self-implementing and enforceable. Therefore, while the rule provides flexibility it also requires that at least one listed minimum method be used to measure baseline performance, to be supplemented if the minimum method is not likely to reach all persons served. Systems have flexibility in determining what supplemental methods should be used. In addition, primacy agencies may allow, as part of their approved primacy program, other minimum methods not listed as the minimum methods in EPA's rule.

H. Form, Manner, and Frequency of the Tier 3 Public Notice: All Other Violations and Situations Requiring Public Notice (§ 141.204)

1. Tier 3 Violations and Situations

Today's Rule: The final rule under Table 1 to § 141.204(a) requires a Tier 3 public notice for: a monitoring or testing procedure violation, except where a Tier 1 notice is already required for specific violations or where the primacy agency determines that the violation requires a Tier 2 or Tier 1 notice; operation under a variance granted under Section 1415 or exemption granted under Section 1416 of the SDWA; announcing the availability of unregulated contaminant monitoring results, as required under § 141.207; and exceedances of the secondary maximum contaminant level (SMCL) for fluoride, as required under § 141.208. The special public notice required for announcing the availability of the unregulated contaminant monitoring results and the special notice for exceedances of the fluoride SMCL, while not included in the

comparable section of the current rule, are not new requirements and can be found elsewhere in the current Code of Federal Regulations. The final rule simply consolidates all the Tier 3 notice requirements in a single table for ease of reference.

Today's rule also makes two other changes from the current rule. It explicitly enables the primacy agency to require a Tier 2 (rather then a Tier 3) notice for specific monitoring or testing procedure violations, taking into account the potential health impacts and persistence of the violation. It also explicitly excludes from Tier 3 the monitoring and testing procedure violations where a Tier 1 notice is already required under the rule. These Tier 1-type monitoring and testing procedure violations are listed in Table 1 to § 141.202 and discussed in Section IV.F.1 of the preamble.

Comments Requested on Proposal: EPA requested comment on the list of violations proposed to require a Tier 3 notice. Specifically, comments were requested on an alternative option that would require a Tier 2 (rather than Tier 3) notice for monitoring and testing procedure violations, with the option given to the primacy agency to downgrade such violations to a Tier 3 notice for minor violations. Most of the comments received supported the lead proposal: requiring a Tier 3 notice for monitoring and testing procedure violations, but giving the primacy agency the option to elevate serious violations to a Tier 2. A significant minority of commenters, however, preferred the alternative option, requiring Tier 2 notice for these types of violations, unless the primacy agency lowered the notice requirement for a specific violation to Tier 3. A few commenters requested that the final rule require a Tier 2 notice for certain monitoring and testing procedure violations, rather than giving discretion to the primacy agency to make these decisions.

EPA Response to Comments: EPA made several changes in the regulatory language proposed under § 141.204(a), but the changes did not alter in any significant way the list of violations and situations requiring a Tier 3 notice. The final rule deleted the item from the proposed Table 1 to § 141.204(a) which authorized the primacy agency to add other violations and situations to the Tier 3 list, as it was redundant with the same authority already granted under Table 1 to § 141.201(a). The final rule also added to the Tier 3 list the special notice requirements already required under §§ 141.207 and 141.208. Table 1 to § 141.204 of the final rule now offers a complete list of Tier 3 required notices for ease of reference. The other changes made to the proposed language were similar clarifications to improve the overall presentation.

In response to the comments received on the proposed alternative option to require Tier 2 notices for monitoring violations, EPA disagrees and has decided to retain the lead proposal (*i.e.,* requiring Tier 3 notice for monitoring violations, with discretion given to the primacy agency to elevate to Tier 2). EPA believes that Tier 3 notice is appropriate because most monitoring and testing procedure violations pose no ongoing risk to public health, and annual notice fulfills the public's right-to-know expectations about these violations. While some monitoring and testing procedure violations may have the potential for serious adverse health effects, most do not. EPA believes that elevating the major or more serious monitoring and testing procedure violations from Tier 3 to Tier 2 must be done on a case-by-case basis, based on the primacy agency's assessment of the potential health impacts arising from the lack of monitoring and the persistence of the monitoring violation. It would be impossible to identify in the rule all instances where Tier 2 notice would be more appropriate. As a result, the rule gives primacy agencies the authority to elevate any monitoring violation to Tier 2, based on potential health effects or persistence of the violation.

EPA also disagrees with commenters who recommend that the rule should distinguish major monitoring and testing procedure violations from other monitoring and testing procedure violations. EPA believes this would make the rule unnecessarily complex. Again, primacy agencies have discretion under the rule to elevate monitoring and testing procedure violations to Tier 2 if they see a need to do so.

2. Timing of the Tier 3 Public Notice

Today's Rule: The final rule under § 141.204(b)(1) requires that public water systems provide a Tier 3 public notice to persons served no later than one year after the system learns of the violation or other situations requiring a Tier 3 public notice. The final rule also requires the public water system to repeat the notice annually for as long as the violation or situation persists. In contrast, the current rule requires an initial notice to be mailed within three months (with possible extension to one year at the State's option for minor monitoring violations) and a repeat notice every three months thereafter until the violation is resolved. EPA believes that requiring a notice no more frequently than annually for Tier 3-type situations is appropriate, given the great number of violations requiring such a notice (*i.e.,* 108,599 of the 128,459 violations reported to EPA in FY 1998) and the fact that most monitoring and testing procedure violations do not pose a health risk. The final rule allows water systems, at their option, to distribute the Tier 3 public notice as soon as they believe it is appropriate for their specific situation.

Comments Requested on Proposal: EPA requested comment on the proposal to require Tier 3 notices no later than 12 months after the violation occurs. A substantial number of commenters expressed concern over the long time period (12 months) allowed to complete the Tier 3 public notice requirements for monitoring and testing procedure violations. Some commenters recommended that the 12-month period be limited to minor monitoring violations only (as in the current rule), with the notice for the major monitoring violations to be required much sooner. A significant minority of commenters believed that 12 months was too long after the violation to be useful to consumers and in some cases (transient non-community water systems) would be quite ineffective since consumers present at the time of the violation will be long gone.

EPA Response to Comments: EPA carried forward to the final rule the proposed 12-month requirement for Tier 3 notices, making language changes to § 141.204(b) to conform to the changes made under the comparable section for Tier 2 requirements. In response to comments requesting that the final rule add the phrase ''as soon as possible'' to the one-year Tier 3 notice deadline, EPA has decided to retain the language as proposed, without adding the phrase. EPA believes that requiring notice ''as soon as possible'' is appropriate and necessary for the more serious violations in Tiers 1 and 2. But violations and situations requiring a Tier 3 notice by definition do not pose any direct risk to public health. EPA has chosen not to parallel this language for Tier 3, so as not to hinder the effectiveness of other more immediate notices. Systems are of course free to issue the notice in advance of the 12-month deadline where they believe it is appropriate.

In response to comments that a 12-month period is too long after the violation to be useful and this deadline should be limited to minor monitoring violations only, EPA disagrees with such a limitation. The routine violations and situations in Tier 3 are by definition

non-serious violations, and EPA believes that Tier 3 requirements should apply to all the routine monitoring and testing procedure violations. Tier 3 notification is more a right-to-know issue than a public health concern. EPA acknowledges that some monitoring and testing procedure violations have the potential to mask potentially serious situations. Rather than attempt to address every case where this may happen, it is more efficient to provide primacy agencies the authority to elevate monitoring and testing procedure violations to Tier 2 or even Tier 1 if they believe the need exists.

A commenter's point that requiring notice as soon as possible would motivate systems to return to compliance more quickly is well taken. However, EPA believes that the vast majority of systems with monitoring or testing procedure violations return to compliance well in advance of the requirement for the public notice. Elevating the notice requirements for these violations to encourage systems to return to compliance is not relevant. For systems with continuing monitoring violations, using the public notification process as an incentive to comply with the monitoring requirements should be part of the primacy agency's overall compliance strategy. Primacy agencies are free under the final rule to elevate the notice requirements from Tier 3 to Tier 2 to meet this compliance objective.

3. Form and Manner of the Delivery of the Tier 3 Notice

Today's Rule: The notice distribution requirements for Tier 3 notices are patterned after the Tier 2 requirements under § 141.203. The basic requirement to take steps reasonably calculated to reach both bill-paying customers and the other persons served who do not receive a bill applies for Tier 3 notices as well. The method of delivery requirements in the final rule for the initial Tier 3 notices and any repeat notices are the same as those prescribed for the Tier 2 public notice.

Comments Requested on Proposal: EPA requested comment on the revised requirements for the method of delivery of the Tier 3 notices. Commenters generally supported the proposed method of delivery requirements. Several commenters requested clarification of EPA's intent related to reporting multiple monitoring violations in a single notice, since in some cases a water system missing a single sample may generate separate monitoring violations for all regulated contaminants under the single analytical technique. For example, one analytical method is used to monitor for the 21 regulated VOCs; missing the one sample, therefore, generates 21 monitoring violations.

EPA Response to Comments: EPA made minor changes to proposed § 141.204(c), to conform to the changes made in the comparable section of the final rule for the form and manner of the Tier 2 notice. See the discussion of EPA's response to comments in Section IV.G.3 of the preamble. In response to the request that EPA clarify how multiple monitoring violations should be presented in a single Tier 3 notice, EPA strongly supports efforts by systems to use a single Tier 3 notice to communicate multiple violations whenever appropriate. To make EPA's intent clearer, EPA changed the first of the ten elements required in every public notice to explicitly reference the possibility of multiple violations in a single notice. Section 141.205(a)(1) now reads (with the changes in italics): ''* * * description of the violation or situation, including the contaminant(s) of concern * * *'' EPA will also provide examples and a notice template in the Public Notification Handbook to illustrate how multiple monitoring violations can be presented in a single notice.

4. Option To Use an Annual Notice, Including the CCR, To Deliver Tier 3 Notices

Today's Rule: The final rule under § 141.204(b)(2) gives the water systems the option of providing an annual notice listing all Tier 3 violations occurring during the previous year, as long as the water system makes certain that the annual notice is distributed no later than one year after the earliest of the included violations. For systems with multiple monitoring violations, the advantages of using an annual notice instead of individual notices for every violation are compelling, both in terms of reduced cost and in terms of effective communication with the consumers. Further, § 141.204(d) allows community water systems, if appropriate, to use the annual Consumer Confidence Report (CCR) as the vehicle for giving initial public notice for violations occurring during the previous twelve months. However, the use of the CCR as a vehicle for the annual public notice has strict limitations: the CCR can only be used if the CCR meets the timing, content, and distribution requirements required under the public notification rule. The specific conditions for use of the CCR as the annual Tier 3 public notice are listed in § 141.204(d) of the final rule.

Since the vast majority of the violations require a Tier 3 public notice, the burden on public water systems with multiple Tier 3 violations would be dramatically reduced through use of an annual notice and, where possible, the CCR. EPA recommends that public water systems consider how the CCR and public notification requirements can be better coordinated to take advantage of these efficiencies.

Comments Requested on Proposal: EPA requested comment on the option to allow public water systems to provide an annual notice of violations in lieu of individual Tier 3 notices and on the use of the CCR to meet the Tier 3 public notification requirements. In general, virtually all commenters supported the option given to public water systems with multiple Tier 3 violations to use an annual public notice. But many commenters had reservations about the proposed option for using the CCR as the vehicle for the annual public notice. Most commenters believed that using the CCR was a good idea in concept, but they identified significant problems in practice if the final rule required that the CCR must first meet the Tier 3 public notification rule requirements. The CCR and public notification rules have different timing, delivery, and content requirements that are difficult to reconcile. A significant minority of commenters disagreed altogether with giving systems the option to use the CCR as the annual public notice because they believed the purposes of the public notice and the CCR are so different.

EPA Response to Comments: EPA retained in the final rule the proposed language allowing water systems, at their option, to issue an annual Tier 3 notice of violations occurring during the year (including using the CCR where appropriate). The final rule made minor changes to the proposed language in §§ 141.204(a)(2) and 141.204(d) to better define the limitations on their use and to clarify EPA's intent, but the final rule makes no significant changes to what EPA proposed. EPA agrees with the commenters who supported the use of the CCR but expressed reservations about how such an option would actually work. EPA acknowledges that there are significant limitations to using the CCR as the annual Tier 3 public notice. However, where the timing of violations allows it, EPA does recommend coordinating the CCR and the annual Tier 3 public notice. Coordinating the two related activities would reduce redundancy and would be less costly. An annual Tier 3 public notice as part of the CCR would sharpen the overall message and be more likely to get consumers' attention. EPA will provide in the final Public Notification Handbook suggestions and examples on

how to coordinate the annual Tier 3 notices with the CCR.

In response to comments that EPA should change the public notice requirements to better fit into the format and content of the CCR, EPA believes such changes would undermine the intent of the public notice. EPA is also limited by the specific timing, delivery, and content requirements of the public notification provisions in the SDWA, as amended. Because EPA encourages water systems to use the CCR where possible, EPA investigated ways to extend the deadline for Tier 3 notices to 18 months. EPA concluded such a change could not be made in the rule because the 12-month period is clearly required by statute. This limits the use of the CCR as the initial public notice to only those violations occurring within 12 months of the CCR publication. Practically, this means that for CCRs published on July 1 (as required under the CCR rule), the CCR could only be used as the initial public notice for violations that occurred after July 1 of the previous year.

In response to the commenters who objected to EPA allowing use of the CCR at all for the initial public notice, EPA continues to support initiatives by public water systems to better coordinate the CCR and the public notices because the violation information required for both is complimentary, the objectives are similar, and coordinating the two similar requirements is more efficient and effective.

I. Content of the Public Notice (§ 141.205)

1. Standard Elements of the Public Notice

Today's Rule: The final rule specifies a list of ten elements that must be included in a public notice for water systems with violations of National Primary Drinking Water Regulations (NPDWRs) and for most other situations requiring a public notice. The rule also specifies four elements that must be included in notices for water systems operating under a variance or exemption. The final rule revises and edits the existing list of standard elements required in every public notice and strengthens the criteria and standards defining notice quality.

• Ten elements are required under § 141.205(a) for public notices of violations of NPDWRs, including monitoring and testing procedure violations, or other situations requiring a public notice. The ten required elements include:

1. A description of the violation or situation that occurred, including the name of the contaminant(s) and level(s) (where applicable);
2. When the violation or situation occurred;
3. Any potential adverse health effects;
4. The population at risk;
5. Whether alternative water supplies should be used;
6. What actions consumers should take;
7. What the system is doing to correct the violation or situation;
8. When the water system expects to return to compliance or otherwise resolve the situation;
9. The name, business address, and phone number of the water system owner or operator; and
10. A statement appended to the notice (where applicable) to encourage notice recipients to distribute the notice to other consumers who might not have seen the notice.

This list of elements is significantly changed from the content requirements in the current rule, as discussed later in this section.

• Four elements are required under § 141.205(b) for public notices for water systems operating under a variance or exemption:

1. An explanation for the reasons for the variance or exemption;
2. The date the primacy agency granted the variance or exemption;
3. A brief status report on compliance with the variance or exemption conditions; and
4. A notice of any opportunity for public input into the review of the variance or exemption.

The current rule does not set the required content elements for public notices for variances or exemptions.

• Four performance standards are listed under § 141.205(c)(1) defining the adequacy of the notice. The notice:

1. Must be displayed in a conspicuous way when printed or posted;
2. Must not contain overly technical language or very small print;
3. Must not be formatted in a way that defeats the purpose of the notice; and
4. Must not contain language that nullifies the purpose of the notice.

The performance standards in today's final rule modify slightly the comparable elements in the current rule.

Note that the information required under § 141.205(b) for variances or exemptions is identical to that already required to be included in the CCR. Community water systems operating under a variance or exemption are encouraged to use their CCR to give the Tier 3 public notification, as long as the timing and delivery requirements required under the final public notification regulation are met. Public water systems that are not required to issue a CCR may, at their option, combine the variance and exemption notice with other violations occurring over the last year into a single annual public notice. Using the CCR or other annual notice is inappropriate for public water systems violating the conditions of a variance or exemption. Such violations require a 30-day Tier 2 notice.

Today's rule broadens the applicability of the content requirements under § 141.205(a) to include not only notices required for violations of the NPDWRs but also for other situations requiring a public notice. The current rule does not specify content requirements for ''other situations'' requiring a public notice. The list of ''other situations'' requiring a public notice has been considerably expanded in today's rule. The situations requiring a public notice other than an NPDWR violation or a variance or exemption are listed in part IV of the final Appendix A to Subpart Q. Six ''other situations'' are listed:

• Tier 1 Notice Requirement Under § 141.202(a) for Waterborne Disease Outbreak;
• Tier 1 Notice Requirement Under § 141.202(a) for Other Waterborne Emergency;
• Tier 1 Notice Requirement Under § 141.202(a) for Other Situations as Determined by Primacy Agency;
• Special Notice Under § 141.207 to Announce the Availability of Unregulated Contaminant Monitoring Data;
• Special Notice Requirement Under § 141.208 for Exceedance of the Fluoride Secondary Maximum Contaminant Level (SMCL); and
• Special Notice Requirement Under § 141.209 for Exceedance of Nitrate MCL for Non-Community Water Systems, When Allowed by Primacy Agency.

Except where the content requirements are otherwise specified in the rule language, EPA intends the content requirements under § 141.205(a) to apply. The only exceptions in the rule are: (1) The special notice for the fluoride SMCL exceedance under § 141.208, where the entire text of the notice consists of standard language specified in § 141.208(c); and (2) the special notice announcing the availability of unregulated contaminant monitoring results under § 141.207, where the standard elements related to a violation do not apply. Applying the same content requirements under § 141.205(a) for both violations and other situations makes sense because

the questions posed by persons served by water systems for both are basically the same. In both cases, the persons served need to understand what is prompting the notice, what health risk the underlying violation or situation poses, what steps should be taken to minimize risk, and what the water system is doing to resolve the violation or situation.

Under § 141.205(a) of today's rule, EPA is making small but significant changes from the list of notice elements currently required under § 141.32. Other than adding the ''other situations'' to the definition of each element, the changes from the current rule are as follows:

- Element (a)(1), the description of the violation or situation, is modified to include both the name of the contaminant(s) and the contaminant level(s) (where applicable);
- Element (a)(2), when the violation or situation occurred, and element (a)(8), when the system will return to compliance or resolve the situation, are added;
- Element (a)(9), the water system contact information, is expanded to require the name and business address of the contact in addition to the phone number;
- Element (a)(10), standard language encouraging persons receiving the notice to distribute it to other persons served (where applicable), is added.

Comments Requested on Proposal: Comments were requested on the list of elements in the proposal and the four performance standards identified for how the notices must be presented. Several commenters expressed concern that the ten elements required in notices for violations of NPDWRs do not fit into every notice situation. They felt that by requiring them in every notice, EPA's proposal may inadvertently hinder the public water system's ability to issue an effective notice. Other commenters raised specific concerns around the individual elements.

EPA Response to Comments: EPA made several changes to the proposed language in the final rule, but the changes did not substantively change the notice content requirements under §§ 141.205(a), (b), and (c)(1). In response to comments that the proposed requirement under § 141.205(a) may be too restrictive because it requires all ten elements to be included for every notice regardless of the situation, EPA wants to reaffirm its intent that the ten elements are meant to apply to every notice situation. Each of the ten elements must be addressed in some manner for each notice, regardless of the violation type (including monitoring and testing procedure violations) or situation, the notice tier, and the method of delivery. But EPA expects public water systems to use this simple baseline requirement to guide development of a complete and effective notice, not to force systems to add information that is inappropriate or not useful in a given situation. To reflect this intent, EPA has made key changes to the rule language to clarify where discretion in their use is allowed. In response to comments, EPA also amended the language to provide better definition and clarity for some of the elements. If used as EPA intends, the content requirements under § 141.205(a), as amended in the final rule, will not hinder the development of effective notices. To enhance EPA's expectations regarding use of the ten elements, EPA has developed public notice templates and sample notices for a variety of violations and situations. These templates and sample notices will be included in the Public Notification Handbook to be issued shortly.

2. Multilingual Requirements for Public Notices

Today's Rule: The final rule under § 141.205(c)(2) is much more specific than the current rule in defining the multilingual requirements to be met by public water systems. The current rule under § 141.32 (c)(2) sets a general performance standard, requiring simply that the notice shall be multilingual where appropriate. The final rule requires public water systems serving a large proportion of non-English speaking consumers (as determined by the primacy agency) to include in their notices, in the appropriate languages, information on the importance of the notice or a telephone number or address where persons served may contact the water system to obtain a translated copy of the notice or to request assistance in the appropriate languages. The multilingual requirement in the final rule is in two parts:

- § 141.205(c)(2)(i), which sets the same basic multilingual requirements as in the CCR rule; and
- § 141.205(c)(2)(ii), which requires the water system to determine when and how it must meet the multilingual requirement when the primacy agency has not made the determination.

EPA encourages water systems to go beyond the minimum multilingual requirements in this rule, particularly for Tier 1 notice situations, and provide a fully translated copy of the notice on request or offer telephone assistance in the appropriate language. The Public Notification Handbook will contain sample language regarding the importance of the notice in various languages as well as complete Tier 1 public notice templates in Spanish.

Comments Requested on Proposal: Comments were requested on the more specific multilingual requirements for public water systems required under the proposed rule. Most of the commenters requested that the final rule provide more clarity on when the multilingual requirements would apply and how the rule language (''PWS serving a large proportion of non-English speaking consumers'') would be interpreted by the primacy agency.

EPA Response to Comments: To respond to comments requesting more clarity on how and when the multilingual requirements would apply, EPA added a new paragraph in the final rule (§ 141.205(c)(2)(ii)) amending the proposed section to require water systems to comply with the multilingual requirements where appropriate, even in those cases where the primacy agency does not provide further direction. The proposed rule language required water systems serving a large proportion of non-English speaking consumers, as determined by the primacy agency, to meet the multilingual requirements. The final rule maintains the proposed language under § 141.205(c)(2)(i), but it now also includes a second paragraph not in the CCR rule requiring that water systems, in the absence of further primacy agency direction, comply with the multilingual requirements where appropriate. EPA intends the second paragraph (141.205(c)(2)(ii)) to provide a baseline regulatory requirement ensuring that public water systems, in the absence of additional primacy agency direction, would continue the multilingual programs they are required to have in place under the current rule.

In response to comments that the final rule establish criteria to guide the primacy agencies and water systems on who must comply with the multilingual requirements, EPA has decided not to establish such criteria in the final rule. EPA agrees, however, that additional guidance would be useful. EPA will provide examples in the Public Notification Handbook of the range of situations where it believes multilingual notices are appropriate. EPA will work with those States which are already developing multilingual programs under the CCR rule to guide implementation of the similar requirements for the public notification program.

EPA agrees with a number of commenters that compliance with the letter and spirit of the multilingual requirements will be extremely difficult, particularly for situations where many different languages are spoken by large numbers of consumers. EPA also

believes that compliance with the multilingual requirements is very important if notices are to effectively reach all persons served, particularly for Tier 1 situations. Although EPA is unable to provide a translation service, as some commenters recommended, EPA will include in Appendix C of the Public Notification Handbook a translation in several languages of the key phrases EPA believes are critical in a public notice for communicating the importance of the message. It will also work actively with the States, utility associations, and other assistance providers to provide better support to utilities where needed. EPA believes that widespread compliance with the multilingual requirements depends on active and ongoing support from EPA, the States, the Tribes, and utility associations, and other assistance providers.

3. Standard Health Effects Language

Today's Rule: The final rule under § 141.205(d)(1) retains the requirement that all public notices for MCL and treatment technique violations use mandatory health effects language to explain the health risks posed by the violation. The final rule replaces the standard language in the current rule for each NPDWR with a new Appendix B to Subpart Q, which provides a table of regulated contaminants with the required language. The final health effects language is shorter, simpler, and consistent with the language EPA uses in similar outreach forums and documents. Under the rule published today, the health effects language required for both the final public notification rule and the Consumer Confidence Report rule are identical.

EPA believes it does not make sense to require standard health effects language different from the CCR language unless there is a compelling reason specific to the public notice situation. Although EPA recognizes that the CCR and public notice may be given at different times and may be intended to meet different objectives, EPA believes that the benefit of using identical core health effects language outweighs the value of tailoring the language to the unique objectives of the public notice. EPA expects that public water systems will supplement the mandatory health effects language or otherwise put the language in the context of the overall notice to meet the unique purposes of the specific public notice. Examples of public notices applicable to different situations are included in the final Public Notification Handbook, which will be issued shortly.

Comments Requested on Proposal: EPA requested comment on EPA's proposal to use the CCR standard health effects language to meet the public notification requirement. In particular, EPA solicited comment on specific situations or violations where the CCR language is believed to be inappropriate or incomplete. Most commenters supported keeping the CCR and public notice health effects language the same. A significant minority of commenters believed that the public notice language should be separate from the CCR language because of the different purpose of public notification. Several commenters provided alternative language for specific violations that they believe better expressed the health concerns that needed to be communicated in the public notice for the violation. Other commenters requested that EPA vary the required health effects language based on the strength of evidence underlying the standard, particularly for carcinogens, or include in the language information on the quality of the source waters.

EPA Response to Comments: With three exceptions, the health effects language in today's final rule is identical with the language that was proposed:

- The first exception is the language in the final rule for violations of the fluoride MCL. Today's rule revises the public notification language proposed in Appendix B to Subpart Q for fluoride. Today's action also amends the CCR rule to include this revised fluoride language. The revised fluoride language for violations of the MCL now includes more specific information on the cosmetic effects of exceedances above 2 mg/l, which is the fluoride secondary maximum contaminant level (SMCL). EPA's response to comments received concerning the fluoride standard language is included in Section IV.J.3 of the preamble.
- The second exception is the language EPA proposed in the public notification rule for new and revised standards under the Stage 1 D/DBP rule. EPA is incorporating the language that was proposed into the final rule with only minor editorial changes to maintain consistent language for contaminants with the same health effects. Today's action also amends the existing CCR rule to insert the exact language that is contained in the final public notification rule.
- The third exception is the language in the final rule for fecal coliform/*E. coli* MCL violations. The language in the current CCR rule and the proposed rule listed infants, young children, and people with severely compromised immune systems. EPA agrees with several commenters that drinking water with violations of the fecal coliform/*E.coli* standard may pose a special health risk to the elderly as well. Accordingly, the EPA has amended the proposed public notification rule and revised the current CCR rule to add ''some of the elderly'' to the standard health effects language for fecal coliform/*E.coli.*

The final rule affirms the proposed requirement to use standard health effects language in Appendix B in public notices for violations of the MCL, TT, and MRDL standards. In addition, EPA reaffirmed its intent to keep the standard health effects language identical for the public notification and CCR rules. Today's action publishes identical language in the two rules for all the existing regulated contaminants. EPA will maintain this policy direction when considering the public notification and CCR rule requirements for new and revised standards, unless there is a compelling reason specific to the new rules for the language to be different.

In response to the comments received offering alternative language to the proposal for specific violations, EPA undertook a systematic review of each comment to determine, first, if the proposed public notification language (and the underlying CCR rule language) was erroneous or misleading and, second, if there was a reason unique to the public notification objective for the language to be different from the CCR. EPA started with the presumption that the CCR language and the public notification language should be the same unless there were compelling reasons to be different. Based on this review, EPA has concluded that there were no errors in the standard language in the existing CCR rule justifying a change and no compelling reason for the core health effects language in the final public notification rule to be different than what was already in place in the CCR rule. Therefore, with the two exceptions discussed earlier in this section, the proposed language is carried forward unchanged into the final public notification and amended CCR rules. EPA's detailed response to the commenters offering alternative language is contained in the ''Response to Comments'' document in EPA's docket for this rule.

In response to several commenters who recommended that the language be greatly simplified for low-literacy audiences, EPA believes such a change is unwarranted. EPA notes that the health effects language developed for the CCR rule, and used in the proposed

public notification rule, was targeted to low-literacy audiences. It is intended to be simplified language, while still communicating essential health information.

EPA does agree with several of the commenters who recommended that EPA periodically review the public notification and health effects language required in both the CCR and the public notification rules. EPA intends to conduct such a review periodically as new and revised regulations are developed and as new health effects materials are developed based on ongoing research and new information.

4. Standard Language for Monitoring and Testing Procedure Violations

Today's Rule: The final rule under § 141.205(d)(2) adds a new section requiring that all public notices contain the following standard language for monitoring and testing procedure violations:

> We are required to monitor your drinking water for specific contaminants on a regular basis. Results of regular monitoring are an indicator of whether or not your drinking water meets health standards. During [compliance period], we [''did not monitor or test'' or ''did not complete all monitoring or testing''] for [contaminant(s)], and therefore cannot be sure of the quality of your drinking water during that time.

The mandatory language is required in all public notices for monitoring and testing procedure violations. EPA recognizes that many monitoring violations are minor, and are quickly resolved and pose little potential risk to health. For most monitoring and testing procedure violations, water systems resume monitoring quickly after a single violation. The standard language will be most effective where the water system supplements the standard language with a clear explanation of the status of the violation, its relative seriousness related to public health risk, and how it was rectified.

Comments Requested on Proposal: EPA solicited comment on proposed standard language, particularly the phrase ''* * * and we are unable to tell whether your health was at risk during that time.'' EPA also requested comment on an option to not require any specific language in the public notice for all monitoring violations. Although most commenters supported the new provision requiring standard language to be included in public notices for monitoring violations, several commenters offered edits or alternative language. Other commenters recommended that the standard language be applied selectively or tailored to take account of the wide range of monitoring violation situations. A significant minority of the commenters disagreed altogether with the need to require any standard language for monitoring violations in EPA's rule.

EPA Response to Comments: The final rule retains the proposed new requirement to use standard language in the public notice for monitoring and testing procedure violations. In response to commenters supporting the standard language but offering edits to better meet EPA's objective, the standard language under § 141.205(d)(2) in the final rule has been significantly revised from the language as proposed.

EPA revised the proposed language to speak of the potential health effects of failure to monitor in more general terms, in response to comments that more specific health effects language does not always apply to notices across the wide range of monitoring and testing procedure violations where the language must be used. EPA's intent is to clearly and simply alert consumers that lack of monitoring or failure to meet testing requirements may in some cases disguise a potential risk to health. It is intended to prompt questions from persons served about the significance of a specific monitoring and testing procedure violation. EPA expects water systems to anticipate such questions and to answer them for the specific situation in the full public notice.

In response to comments that EPA delete the requirement to use standard language in favor of a narrative performance standard, EPA considered setting a performance standard rather than requiring mandatory standard language in the final rule. EPA opted to retain standard language in the final rule because the Agency believes that, in the absence of a reported MCL, MRDL, or treatment technique violation, consumers may presume that the drinking water provided by their water system is safe. This may sometimes not be an appropriate presumption. The standard language clearly and simply alerts consumers that lack of monitoring in some cases may disguise a potential risk to health. Although EPA believes that the vast majority of monitoring violations are quickly resolved and do not disguise a potential risk to health, EPA intends the standard language to prompt questions about the significance of the specific monitoring violation. In routine circumstances, these questions should be anticipated and answered in the full public notice. EPA's intent is not to alarm consumers unnecessarily; rather, the information should help inform consumers about the significance of the monitoring or testing procedure violation.

5. Standard Language To Encourage Customers Receiving the Public Notice To Distribute the Notice to Other Persons Served

Today's Rule: The final rule under § 141.205(d)(3) adds a new section requiring that public notices contain standard language, where applicable, encouraging the customers receiving the public notice to distribute the notice to other persons served by the public water system (such as tenants, residents, patients, *etc.*). The required standard language is as follows:

> Please share this information with all the other people who drink this water, especially those who may not have received this notice directly (for example, people in apartments, nursing homes, schools, and businesses). You can do this by posting this notice in a public place or distributing copies by hand or mail.

Mailed notices, in particular, are routinely sent to only the bill-paying customers, and therefore may not reach some consumers at risk unless actions are taken to notify them of the violations. EPA believes that this standard language is appropriate as a safety net and is necessary to encourage those receiving the public notice to take steps to alert others of the violations and potential risk from drinking water.

Compliance with this requirement is one of, but not the only, reasonably-calculated steps a public water system must take to reach other persons who may not receive or see the notice. The final rule gives the water system discretion to add the distribution language when it determines such a notice is needed to reach persons served beyond those who receive the initial notice directly from the water system.

Comments Requested on Proposal: Comments were solicited on the proposed standard language and any alternative language that would meet EPA's intent. Most commenters supported the proposed requirement to include standard distribution language in public notices. A few commenters believed such standard language was not always appropriate and recommended that the final rule give the water system or primacy agency flexibility in determining when it was applicable. A number of comments offered edits to the proposed text to better communicate the intended message.

EPA Response to Comments: The final rule retains the proposed requirement that water systems include in their notices the standard language contained in § 141.205(d)(3) to encourage persons receiving the notice to distribute it to

others who are served by the water system. EPA agreed with commenters, however, that the standard language should be required only where it is applicable and useful to reach those persons served by the system who may not hear about the violations through traditional means. Therefore, the final rule gives the water system discretion to determine when the standard language is applicable. The proposed rule required the standard language to be used for all notices. The final rule also includes minor edits to the proposed standard language in response to suggestions from commenters. EPA believes the revised language is simpler than what was proposed and would apply to more situations and encourage wider distribution. EPA disagrees with several commenters who claimed that such a new requirement is not warranted. On the contrary, EPA believes the standard language will serve as a safety net, encouraging those receiving the public notice to alert others who would otherwise not hear of the potential risk from their drinking water due to the violation.

J. Other Public Notification Requirements

1. Notice to New Billing Units or New Customers (§ 141.206).

Today's Rule: The final rule modifies the current regulatory provision requiring that public notices go to new billing units. The current rule requires that community water systems send a copy of the most recent public notice to all new billing units for ongoing MCL and TT violations or violations of the conditions of existing variances or exemptions. The final rule broadens the requirement to include any ongoing violation or situation that required an initial public notice (including ongoing monitoring and testing procedure violations) and adds a new provision requiring non-community water systems to continuously post the notice to inform new customers of any ongoing violations. EPA is revising the current rule to better ensure that new customers served by all public water systems are made aware of any continuing violations of drinking water standards. The initial notice, if posted in a location where new consumers pass by, will meet this new requirement. However, water systems that deliver the initial notice to some but not all the existing customers (or that otherwise have the notice out of sight of new consumers) have an additional responsibility under this new provision. EPA believes this new provision makes notices more readily available to new consumers not receiving the notice under the current regulation.

Comments Requested on Proposal: EPA requested comment on the change to the current rule extending the requirement to cover ongoing monitoring and testing procedure violations and to require that the notice be provided to new customers by both community and non-community water systems. Commenters raised a number of concerns with the proposed language. Several commenters believed that compliance with the new requirement would be difficult to track. Other commenters felt that the notice to new billing units of ongoing monitoring violations was unnecessary and that the more effective vehicle to communicate these violations, for community water systems at least, would be the CCR.

EPA Response to Comments: EPA is retaining the requirement for notice to new billing units as proposed. The final rule makes minor, clarifying changes from the proposal, but the basic changes to the current requirements in the proposal have been retained in the final rule. In response to comments that the new requirement extending the current requirement to include notice to new billing units for ongoing monitoring violations was inappropriate and difficult to track, EPA has decided to leave the proposed requirement unchanged. EPA believes that notification to new customers of all ongoing violations meets a clear right-to-know objective. It is part of the operator's obligation to reach the persons they serve, regardless of when they move into the distribution area. In response to State commenters anticipating significant difficulty in tracking compliance, EPA expects that when a system submits the certification of compliance to the primacy agency under § 141.31(d) after each violation event, it would also commit the PWS to sending the notice to new billing units until the violation is resolved. EPA does not intend for systems to forward to primacy agencies a copy of every public notice sent to new customers. EPA will include in the Public Notification Handbook a discussion of how the certification process will work.

2. Special Notice To Announce the Availability of the Results of Unregulated Contaminant Monitoring (§ 141.207)

Today's Rule: The final rule creates a new § 141.207 to add the timing and other public notification details to the notice requirement under the recently published Unregulated Contaminant Monitoring Rule (UCMR). The UCMR carried over an existing provision in § 141.35, which required that the water systems give notice to the public of the availability of unregulated contaminant monitoring results. The UCMR retains the same reporting requirement as in the former § 141.35 but eliminates the 3-month deadline for giving the public notice, referencing instead the timing and other requirements contained under § 141.207 of today's rule. Today's rule sets a 12-month deadline for this special notice, to allow public water systems, at their option, to report the availability of all the results in a single annual notice, reducing the number of required notices from four to one. EPA encourages community water systems to include the annual notice required under this section in their CCR, as long as the CCR meets the public notification timing and delivery requirements. The unregulated contaminant monitoring results (where detected) must already be included in the CCR, so meeting both requirements in the CCR will be both more efficient for the regulated community and less confusing to the public.

Comments Requested on Proposal: EPA requested comment on the proposed approach to meeting the requirements under Sections 1414(c)(2)(E) and 1445(a)(2)(E) of the 1996 SDWA. EPA also requested comment on its proposal to shift the timing of the notice from three months to twelve months. Most commenters supported the timing change. Several commenters recommended that EPA delete the requirement for this special notice requirement altogether from the public notification rule, as it is already adequately covered by the CCR (for community water systems at least).

EPA Response to Comments: The final rule retains the requirement, as proposed, to provide notice of the availability of unregulated contaminant monitoring results within twelve months of the monitoring. In response to several commenters who recommended that the notice requirements be provided within three months (as required in the former § 141.35), EPA has decided to retain the proposed 12-month notice deadline. EPA sees this distribution of information as a right-to-know issue, with a different public notification message than the higher-tier notices because it is not related to a violation of an existing standard. The change in the timing of the public notice is to allow water systems, at their option, to report the availability of all the results just once during the year. Nothing precludes a water system from distributing notice of the availability of results of monitoring for unregulated contaminants sooner.

In response to comments that the special notice announcing the availability of unregulated contaminant monitoring results is overlapping and redundant with a similar requirement in the CCR rule, EPA is responding to a statutory requirement under Section 1414(c)(1) and (c)(2)(E) of the 1996 SDWA amendments and is carrying over an existing requirement. EPA does agree, however, that community water systems should be allowed and encouraged to include the notice of the availability of the results in the CCR, if the timing and delivery requirements are met. EPA believes close coordination between the public notification requirement and the CCR reporting requirement for this information will be both more efficient for the regulated community and less confusing to the public.

3. Special Notice for Exceedance of the Fluoride Secondary Maximum Contaminant Level (SMCL) (§ 141.208)

Today's Rule: Today's action moves the current special fluoride notice requirements under § 143.5 into the new Subpart Q public notification provision at § 141.208. The special public notice is to alert persons served who may not otherwise be notified that the fluoride levels in the drinking water may pose a cosmetic dental risk to children under nine years old. The final rule retains the current requirement that community water systems provide a special notice to persons served when they exceed the SMCL of 2 mg/l for fluoride but do not exceed the MCL violation level of 4 mg/l. As in the current rule, a copy of the notice must also be sent to all new billing units and new customers at the time service begins and to the State public health officer. Community water systems must use the mandatory notice language in the rule. The final rule requires that the notice be sent out as soon as practical but no later than 12 months from the day the water system learns of the exceedance. Repeat notices must be sent out at least annually until the exceedance is eliminated. At its option, a primacy agency may require an initial notice sooner than 12 months or a repeat notice more frequently than annually when warranted by the specific situation.

The final rule under § 141.208 of Subpart Q makes four changes to the current public notice requirements for exceedance of the fluoride SMCL:

- To require that the form and manner of the special notice follow the Tier 3 requirements in §§ 141.204(c) and 141.204(d) of the final rule, including that the notice be sent to persons served by the system (rather than just to the billing units);
- To require that the notice be sent out ''as soon as practical but no later than 12 months from the day the water system learns of the exceedance'' (rather than ''annually'');
- To explicitly authorize the primacy agency to require notice sooner and repeat notices more frequently when warranted by the specific situation; and
- To revise the mandatory language to reflect recent studies of the incidence and potential cosmetic effects of dental fluorosis and to make other changes to better communicate the intended message.

Today's rule also requires that the proposed standard health effects language for violations of the fluoride MCL in Appendix B of Subpart Q be revised to include the effects of dental fluorosis on children under nine years of age. This was added in response to comments that the proposed standard language required for a violation of the MCL did not adequately address the risks to children from fluoride levels above the SMCL.

EPA believes it is important to retain and strengthen the existing fluoride SMCL special notice requirement. Consumers have a right to know about the cosmetic effects from dental fluorosis that may occur in children resulting from exposure to drinking water exceeding the fluoride SMCL. The current notice requirement for exceedance of the fluoride SMCL in § 143.5 was put in place when the fluoride national primary drinking water regulation (NPDWR) was published in April 2, 1986 (50 FR 11396). The 1986 fluoride NPDWR replaced the more stringent MCL in place as an interim standard since the original SDWA in 1974. The interim MCL of 2 mg/l became the SMCL when the final primary standard was published on April 2, 1986. Part of the agreement for reducing the stringency of the MCL from 2 mg/l to 4 mg/l was that the public would continue to be notified of the potential for developing dental fluorosis from exposure to their drinking water when the levels exceeded 2 mg/l.

NTNCWS are not currently required to monitor for fluoride under EPA's current regulations, and therefore the EPA SMCL notice requirement does not apply to them. However, EPA recommends that NTNCWS, particularly schools and day-care centers, provide the special SMCL notice to persons they serve when they learn they are providing drinking water with fluoride levels exceeding 2 mg/l.

Comments Requested on Proposal: EPA requested comment on whether EPA should retain the special public notice for exceedance of the fluoride SMCL and, if retained, whether retaining the requirement allowing the public notice to be given as soon as practical but no later than 12 months after the exceedance is known is sufficient. EPA also requested comment on whether the revised mandatory language better communicates the purpose of the notice and the cosmetic risks from drinking the water. Several commenters supported continuation of the special notice requirement but believed that EPA should require it to be distributed as a Tier 2 (30-day) notice rather than annually because of the risk of dental fluorosis in children from relatively short-term exposure. Other commenters requested that EPA either delete the requirement outright or somehow merge it with the CCR requirements.

EPA Response to Comments: The final rule carries forward the principal elements of the proposed notice requirement for exceedances of the SMCL basically unchanged. In response to comments, however, EPA did make significant changes to the proposed mandatory notice language to improve the effectiveness of the notice. Also, in response to comments, EPA has explicitly authorized the primacy agency to require the initial notice sooner than 12 months and any repeat notices more frequently than annually. EPA also restored in the final rule the language in § 143.5 of the current rule (inadvertently left out of the proposal) requiring that the notice be distributed not only to persons served, but also to new billing units and new customers and to the State health officer.

In addition, EPA agreed with commenters that the proposed standard language required for violations of the fluoride MCL did not adequately cover the cosmetic effects from the violation. Accordingly, EPA has modified in Appendix B of the final rule the standard health effects language for violations of the fluoride MCL, to include more complete information on the effects of dental fluorosis. The existing fluoride language required in the CCR rule was amended as well. This change will ensure that parents of the children most vulnerable to the cosmetic effects of fluoride exceedances (*i.e.*, children nine years old and under) receive information on both the cosmetic and health effects from fluoride MCL violations.

In response to commenters recommending that the mandatory notice for exceedance of the fluoride

SMCL be deleted or somehow combined with the CCR requirements, EPA has decided to retain the current requirement basically unchanged. EPA sees no need to question the decision to require this special fluoride notice made when EPA first published the primary fluoride standard in 1986. EPA continues to believe that consumers have a right to know about the cosmetic effects from dental fluorosis that may occur in children from exposure to drinking water exceeding the fluoride SMCL. EPA encourages community water systems to use the CCR to meet this special notice requirement, where possible, as long as the CCR is able to meet the timing and delivery requirements under the public notification regulation.

In response to comments that the notice be required sooner than 12 months after the exceedance because of the likely effects from exposure as short as three months, EPA has decided to retain the timing of the notice as proposed. EPA did, however, add language in the final rule that explicitly authorizes the primacy agency to require a more frequent notice when warranted by the specific situation. EPA is aware of recent studies that indicate possible risk of dental fluorosis from short-term exposure to fluoride levels above the SMCL, but it has not done a sufficient review of the various studies to consider changing the notice timing from what was proposed. Review of the fluoride standard falls within the required six year review of the existing national primary drinking water standards under Section 1412(b)(9) of the SDWA, which is not due to be completed until August 2002. Since some recent studies do indicate a possible risk of dental fluorosis from short-term exposure in certain circumstances, EPA believes it is prudent for a water system with continuous levels of fluoride above the SMCL to work with the primacy agency to determine when and how often the notice should be given, based on the severity and persistence of the fluoride exceedance in the specific situation.

4. Special Notice for Nitrate Exceedances Above the MCL by Non-Community Water Systems (NCWS), Where Granted Permission by Primacy Agency Under § 141.11(d) (§ 141.209)

Today's Rule: The final rule incorporates into Subpart Q the current public notification requirement under § 141.11(d) for non-community water systems (NCWS) that have been granted permission by the primacy agency to continue to exceed the nitrate MCL of 10 mg/l (although they must not exceed 20 mg/l). The current rule under § 141.11(d) sets criteria that primacy agencies must follow in considering whether to allow NCWS to exceed the nitrate MCL without incurring a violation. The criteria under § 141.11(d) require that the water system: (1) Demonstrate that the drinking water will not be available to children under 6 months of age; (2) provide continuous posting of the fact that nitrate levels are above 10 mg/l and identify the potential health effects of exposure; (3) notify local and State health authorities annually of nitrate levels that exceed 10 mg/l; and (4) ensure that no adverse health effects shall result. The public notice provision under § 141.11(d)(2) is revised today to reference § 141.209 of Subpart Q, which requires that NCWS granted permission to exceed the MCL follow the Tier 1 notice requirements (including the deadline, delivery and content) in much the same way as required for violations of the nitrate MCL. EPA believes incorporating the public notice requirement under § 141.11(d) into the more specific Tier 1 standard public notification protocol will allow NCWS to more systematically meet their public notice obligations when allowed to exceed the MCL.

With today's final rule, EPA is incorporating into Subpart Q all the public notification requirements currently in other parts of CFR Part 141, including the requirement in § 141.11(d). See Section IV.L of this preamble for a summary of these changes. This action does not substantively change the existing public notification requirement and therefore requires no prior notice and opportunity to comment.

5. Conditions Under Which the Primacy Agency May Give Notice on Behalf of Public Water System (§ 141.210)

Today's Rule: The final rule retains the provision in the current rule specifying under what conditions the primacy agency may give notice on behalf of a public water system. Under this provision, the primacy agency may give a public notice for the public water system if all public notification requirements are met. The responsibility to comply, however, would always remain with the public water system.

Comments Requested on Proposal: EPA requested comment on the proposal to retain this provision. Virtually all the comments received on this provision supported the proposal.

EPA Response to Comments: The final rule is unchanged from what was proposed.

K. Reporting to the Primacy Agency and Retention of Records

1. Public Water System Reporting to the Primacy Agency (§ 141.31(d))

Today's Rule: The final rule amends the existing reporting requirement under § 141.31(d) by requiring public water systems to submit a certification to the primacy agency that all public notification requirements have been met. Under the current § 141.31(d), public water systems are required to submit copies of all public notices to the primacy agency within 10 days of completing each public notice. EPA believes that including a simple certification of compliance from the public water system with the copies of the notices will: Encourage voluntary compliance; save primacy agency resources; and allow better targeting of noncompliers. EPA also believes that maintaining the existing 10-day reporting deadline allows the primacy agency to quickly understand how the system met its public notification obligation and to pursue whatever follow-up is necessary to ensure the public is effectively informed of the violation. The opportunity for immediate feedback to the water system and quick resolution will strengthen the public notification program.

Comments Received on Proposal: EPA requested comment on the timing and content of the revised reporting requirement, particularly the new certification requirement. A majority of commenters either requested clarification on what EPA intended under the new certification requirement or recommended that EPA delete the new certification requirement from the final rule altogether. Several commenters also objected to the 10-day reporting deadline, some wanting a 30- or 60-day period and others recommending that it be required immediately after the notice is given.

EPA Response to Comments: The final rule retains the proposed requirement that public water systems send a certification of compliance, with copies of the public notices, to the primacy agency within 10 days after the public notification requirements are completed for the initial notice and for each repeat notice cycle. EPA made minor changes to the proposed language to respond to requests that EPA clarify what the scope of the new certification requirement is and when the certification must be submitted. In response to comments questioning the need for this new requirement, EPA believes that a simple certification sent with copies of the notice will facilitate compliance monitoring and follow-up by the

primacy agency. It may also encourage voluntary compliance. In response to comments that EPA extend the proposed ten-day deadline to 30 or 60 days, EPA believes it is important for primacy agencies to receive the notices (and assess their adequacy) as soon as possible after the public water system sends the notice to its customers. The primacy agency's quick follow-up to an inadequate public notice response to violations will ensure public health is protected. In response to a commenter's suggestion of a certification ''box,'' EPA agrees that a properly worded box that indicates the system complied with all of the PN requirements would meet the certification requirement. A sample certification statement for PWSs to use will be included in the final Public Notification Handbook.

2. Retention of Records by Public Water Systems (§ 141.33)

Today's Rule: The final rule requires that public water systems retain public notification records for three years. Today's action also amends the Consumer Confidence Report (CCR) regulation to change the public water system record retention requirement from five years to three years to be consistent with the public notification requirement. The current public notification regulation has no provision for retention of public notification records. A record retention requirement for public notices conforms with the requirements already in place for other EPA regulatory requirements (*e.g.,* sampling results, variances and exemptions). The record retention period of no more than three years is consistent with the limits set in the Office of Management and Budget (OMB) regulations at 5 CFR 1320.5, which implement the Paperwork Reduction Act.

Comments Requested on Proposal: EPA requested comment on the reporting and record keeping proposal, including an alternative to the proposal to set the retention period for records under the public notification regulations to five years. EPA also requested comment on whether the record retention periods required under the related CCR regulation should be adjusted to three years, if necessary, to be consistent with the final public notification retention requirement and Paperwork Reduction Act regulations. Commenters were split on whether a five- or three-year record retention period should be required, but virtually all the comments supported requiring the same period under the CCR rule and public notification rule.

EPA Response to Comments: The final rule setting a three-year record retention period for public notice records is unchanged from the proposal. In response to comments on the need to keep the required record retention period consistent with the CCR rule, EPA is also amending the CCR rule today to match the three-year period proposed for the public notification rule. EPA decided to require a three-year (rather than a five-year) record retention period to be consistent with the baseline requirement under OMB's paperwork reduction act guidelines. No comments were received that gave compelling reasons to deviate from this baseline OMB requirement.

L. Other Changes to the Current Code of Federal Regulations (CFR) To Be Consistent With the Final Public Notification Regulations

Table C is a listing of the changes made in today's rule to various provisions in 40 CFR Part 141 to change the public notification references to the new Subpart Q and to otherwise modify the language to be consistent with the final public notification regulations. The amendments do not substantively alter the existing requirements in these provisions and therefore require no prior notice and opportunity for comment.

TABLE C.—SUMMARY OF OTHER CHANGES TO CFR TO BE CONSISTENT WITH FINAL PUBLIC NOTIFICATION RULE (PART 141, SUBPART Q)

CFR Section	Subject	Subpart Q Reference (where applicable)	Change
§ 141.6(c), § 141.6(g) Effective dates.	''The regulations set forth in . . . § 141.32(b)(3) and § 141.32(d) shall take effect immediately upon promulgation. . . The regulations contained in § 141.32(e)(16), (25–27), and (46) . . . are effective January 1, 1993''.	§ 141.201	Delete all reference to § 141.32. Effective dates for new Subpart Q are contained in § 141.201 introductory paragraph.
§ 141.11(d) Nitrate levels in non-community systems.	''At the discretion of the State, nitrate levels not to exceed 20 mg/l may be allowed in a non-community water system if the supplier of water demonstrates. . . that (1) Such water will not be available to children under 6 months of age; and (2) There will be continuous posting of the fact that nitrate levels exceed 10 mg/l and the potential health effects of exposure; and local and State public health authorities will be notified annually of nitrate levels. . . and (4) No adverse health effects shall result.''.	§ 141.209	Change § 141.11(d)(2) to require that systems meet PN requirements under § 141.209. Add new special notice (§ 141.209), require Tier 1 notification and the ten elements required for violations
§ 141.21(g)(1) Total coliform MCL.	''A public water system which has exceeded the MCL for total coliform in § 141.63 must report the violation to the State no later than the end of the next business day after it learns of the violation, and notify the public in accordance with § 141.32''.	§ 141.203 (Tier 2) and § 141.204 (Tier 3).	Change reference to ''§ 141.32'' to ''subpart Q''

TABLE C.—SUMMARY OF OTHER CHANGES TO CFR TO BE CONSISTENT WITH FINAL PUBLIC NOTIFICATION RULE (PART 141, SUBPART Q)—Continued

CFR Section	Subject	Subpart Q Reference (where applicable)	Change
§ 141.21(g)(2) Coliform monitoring.	''A public water system which has failed to comply with a coliform monitoring requirement, including the sanitary survey requirement, must report the monitoring violation to the State within ten days after the system discovers the violation, and notify the public in accordance with § 141.32''.	§ 141.204 (Tier 3) or § 141.202 (Tier 1).	Change reference to ''§ 141.32'' to ''subpart Q''
§ 141.22(b) 0Turbidity MCL ..	''If the monthly average of the daily samples exceeds the maximum allowable limit or if the average of 2 samples taken on consecutive days exceeds 5 TU . . . report to the state and notify the public as directed in § 141.31 and § 141.32''.	§ 141.203 (Tier 2)	Change reference to ''§ 141.32'' to ''subpart Q''
§ 141.23(f)(2) Confirmation sample for nitrate and nitrate.	''Where nitrate or nitrite sampling results indicate an exceedance of the maximum contaminant level, the system shall take a confirmation sample within 24 hours. . . Systems unable to comply with the 24-hour sampling requirement must immediately notify consumers served . . . in accordance with § 141.32 . . .''.	§ 141.202 (Tier 1)	Change reference to ''§ 141.32'' to ''§ 141.202 and meet other requirements under Subpart Q of this part'' Change ''consumers'' to ''persons'' Add this requirement to § 141.202 along with that for nitrate MCLs (item 2 of Table 1)
§ 141.23(l)(4), § 141.24(f)(15)(iii), § 141.24(h)(11)(iii) Public notice to the area affected for inorganics, VOCs, and SOCs.	''If a public water system has a distribution system separable from other parts of the distribution system with no interconnections, the State may allow the system to give public notice to only the area served by that portion of the system which is out of compliance''.	Subpart Q	Delete these sections since parallel requirement will be included in § 141.201(c)(2)
§ 141.23(n) Inorganics MCL	''When the average of four analyses . . . exceeds the maximum contaminant level, the supplier of water shall notify the State pursuant to § 141.31 and give notice to the public pursuant to § 141.32''.	§ 141.203 (Tier 2)	Change ''§ 141.32'' to ''Subpart Q''
§ 141.23(o) Nitrate MCL	''. . .When a level exceeding the maximum contaminant level for nitrate is found, a second analysis shall be initiated within 24 hours, and if the mean of the two analyses exceeds the maximum contaminant level, the supplier of water shall report his findings to the State pursuant to § 141.31 and shall notify the public pursuant to § 141.32''.	§ 141.202 (Tier 1)	Change ''§ 141.32'' to ''Subpart Q''
§ 141.26(a)(4) Gross alpha or total radium MCL.	''If the average annual maximum contaminant level for gross alpha particle activity or total radium . . . is exceeded, the supplier . . . shall give notice to the State pursuant to § 141.31 and notify the public as required by § 141.32''.	§ 141.203 (Tier 2)	Change ''§ 141.32'' to ''Subpart Q''
§ 141.26(b)(5) Man-made radiation MCL.	''If the average annual maximum contaminant level for man-made radioactivity . . . is exceeded, the supplier . . . shall give notice to the State pursuant to § 141.31 and notify the public as required by § 141.32''.	§ 141.203 (Tier 2)	Change ''§ 141.32'' to ''Subpart Q''
§ 141.30(d) TTHM MCL	''If the average of samples covering any 12 month period exceeds the Maximum Contaminant Level, the supplier of water shall report to the State pursuant to § 141.31 and notify the public pursuant to § 141.32''.	§ 141.203 (Tier 2)	Change ''§ 141.32'' to ''Subpart Q''
§ 141.63(b) Total coliform MCL (fecal positive repeat sample).	''For purposes of the public notification requirements in § 141.32, this is a violation that may pose an acute risk to health.''.	§ 141.202 (Tier 1)	Change ''§ 141.32'' to ''Subpart Q''

TABLE C.—SUMMARY OF OTHER CHANGES TO CFR TO BE CONSISTENT WITH FINAL PUBLIC NOTIFICATION RULE (PART 141, SUBPART Q)—Continued

CFR Section	Subject	Subpart Q Reference (where applicable)	Change
§ 141.75(a)(5)(ii) SWTR reporting requirements (unfiltered systems).	''If at any time turbidity exceeds 5 NTU, the system must inform the State as soon as possible, but no later than the end of the next business day''.	§ 141.203(b)(3)	Change § 141.75(a)(5)(ii) to require consultation with the primacy agency after turbidity exceedance above 5 NTU, as soon as practical but no later than 24 hours in accordance with the public notification requirements under § 141.203(b)(3)
§ 141.75(b)(3)(ii) SWTR reporting requirements (filtered systems).	''If at any time turbidity exceeds 5 NTU, the system must inform the State as soon as possible, but no later than the end of the next business day''.	§ 141.203(b)(3)	Change § 141.75(b)(3)(ii) to require consultation with the primacy agency after turbidity exceedance above 5 NTU, as soon as practical but no later than 24 hours in accordance with the public notification requirements under § 141.203(b)(3)
§ 141.133(b)(1) TTHMs and HAA5 MCLs.	''If the running annual arithmetic average of quarterly averages covering any consecutive four-quarter period exceeds the MCL, the system is in violation of the MCL and must notify the public pursuant to § 141.32 . . .''.	§ 141.203 (Tier 2)	Change ''§ 141.32'' to ''Subpart Q''
§ 141.133(b)(2) Bromate MCL.	''If the average of samples covering any consecutive four-quarter period exceeds the MCL, the system is in violation of the MCL and must notify the public pursuant to § 141.32 . . .''.	§ 141.203 (Tier 2)	Change ''§ 141.32'' to ''Subpart Q''
§ 141.133(b)(3) Chlorite MCL	''If the arithmetic average of any three sample set exceeds the MCL, the system is in violation of the MCL and must notify the public pursuant to § 141.32. . .''.	§ 141.203 (Tier 2)	Change ''§ 141.32'' to ''Subpart Q''
§ 141.133(c)(1) Chlorine and chloramines MRDL.	''If the average of quarterly averages covering any consecutive four-quarter period exceeds the MRDL, the system is in violation of the MRDL and must notify the public pursuant to § 141.32 . . .''.	§ 141.203 (Tier 2)	Change ''§ 141.32'' to ''Subpart Q''
§ 141.133(c)(2)(I) Chlorine dioxide MRDL.	''If any daily sample taken at the entrance to the distribution system exceeds the MRDL, and on the following day one (or more) of the three samples . . . exceed the MRDL, the system must . . . notify the public pursuant to the procedures for acute health risks in § 141.32(a)(1)(iii)(E). Failure to take samples in the distribution system the day following an exceedance of the chlorine dioxide MRDL. . .will also be considered an MRDL violation and the system must notify . . . in accordance with the provisions for acute violations under § 141.32(a)(1)(iii)(E)''.	§ 141.202 (Tier 1)	Change ''§ 141.32(a)(1)(iii)(E)'' to ''Subpart Q''
§ 141.133(c)(2)(ii) Chlorine dioxide MRDL.	''If any two consecutive daily samples taken at the entrance to the distribution system exceed the MRDL and all distribution system samples are below the MRDL, the system . . . will notify the public pursuant to the procedures for non-acute health risks in § 141.32(e)(78). Failure to take samples in the distribution system the day following an exceedance of the chlorine dioxide MRDL at the entrance to the distribution system . . . is also an MRDL violation and the system must notify . . . in accordance with the provisions for non-acute violations under § 141.32(e)(78)''.	§ 141.203 (Tier 2)	Change ''§ 141.32(e)(78)'' to ''Subpart Q''

TABLE C.—SUMMARY OF OTHER CHANGES TO CFR TO BE CONSISTENT WITH FINAL PUBLIC NOTIFICATION RULE (PART 141, SUBPART Q)—Continued

CFR Section	Subject	Subpart Q Reference (where applicable)	Change
§ 141.175(c)(1) IESWTR reporting requirements (filtered systems using conventional or direct filtration treatment).	''If at any time the turbidity exceeds 1 NTU in representative samples of filtered water in a system using conventional filtration treatment or direct filtration, the system must inform the State as soon as possible, but no later than the end of the next business day''.	§ 141.203(b)(3)	Change § 141.175(c)(1) to require consultation with the primacy agency after turbidity exceedance above 1 NTU, as soon as practical but no later than 24 hours in accordance with the public notification requirements under § 141.203(b)(3)
§ 141.175(c)(2) IESWTR reporting requirements (filtered systems using other than conventional or direct filtration treatment).	''If at any time the turbidity in representative samples of filtered water exceed the maximum level set by the State under § 142.173(b) for filtration technologies other than conventional filtration treatment, direct filtration, slow sand filtration, or diatomaceous earth filtration, the system must inform the State as soon as possible, but no later than the end of the next business day''.	§ 141.203(b)(3)	Change § 141.175(c)(2) to require consultation with the primacy agency after turbidity exceedance above the maximum level set by the State, as soon as practical but no later than 24 hours in accordance with the public notification requirements under § 141.203(b)(3)

M. Special State/Tribal Primacy Requirements and Rationale (40 CFR Part 142, Subpart B)

Today's Rule: The final rule amends §§ 142.10 and 142.16 of the primacy regulations (40 CFR Part 142, Subpart B) to define the requirements that States (including eligible Indian Tribes) must follow to incorporate the revised public notification regulations into their approved primacy program. The final rule also amends § 142.14 to require that the State retain, for three years, the certifications and public notices received from the public water systems and any determinations establishing alternative public notification requirements. Finally, the final rule amends § 142.15 to reaffirm the requirement that the State report violations of the public notification regulations on a quarterly basis to EPA.

Under the primacy regulations, a State is required to adopt, as a condition of primacy, a State rule that is no less stringent than the regulation being proposed today. The requirements States must meet to receive primary enforcement responsibility (''primacy'') are listed in § 142.10 and requirements to revise an approved primacy program are in § 142.12. Under § 142.10(b)(6)(v), each State with primary enforcement responsibility must adopt and implement adequate procedures to require public water systems to give public notice that is no less stringent than the EPA public notification requirements. Special primacy requirements unique to the public notification regulation are in § 142.16(a).

The final rule amends § 142.10(b)(6)(v) to replace the existing citation (§ 141.32) with the new public notification citation (40 CFR Part 141, Subpart Q). The final rule replaces the existing language in § 142.16(a) with a new section comprised of two elements.

First, § 142.16(a)(1) requires primacy States to submit requests for approval of a revised primacy program adopting the new public notification requirements under 40 CFR Part 141, Subpart Q. At its option, a State may establish alternative public notification requirements with respect to the form and content of the public notice required under Subpart Q of Part 141. The alternative requirements must provide the same type and amount of information required under Subpart Q and must meet the primacy requirements under § 142.10. States will have two years after the final rule is published in the **Federal Register** to submit a complete and final primacy program revision package to EPA, unless the State requests and EPA approves an extension of up to two additional years.

Second, § 142.16(a)(2) lists the sections of the final public notification regulations (Subpart Q of Part 141) where EPA explicitly authorizes primacy States to augment or otherwise change the EPA requirements to build a more complete and effective State public notification program. In some cases, EPA is counting on the States to augment the EPA regulation by providing authority under their own regulations for making determinations unique to a specific situation that are more appropriate than the regulatory default under the EPA rule (*e.g.,* adding supplemental Tier 1 requirements after consultation with the public water system; elevating a monitoring violation from a Tier 3 to a Tier 2). In other cases, the authority given to the State to deviate from the EPA rule is intended to build in flexibility to give a ''common sense'' solution to unique situations where the EPA rule default requirement just does not work. The regulation in some cases enables the State to tailor the EPA baseline requirements to increase program flexibility and in other cases recognizes and expects the State to exercise its option under primacy to be more stringent than the EPA rule. Building in this flexibility allows the program to be responsive to different situations. One size does not fit all. Of course, States are free to establish requirements that are more stringent and broader in scope than the EPA program without including them in the approved primacy program. The advantage of including such more stringent requirements in the approved primacy program is that it enables EPA and the State to jointly implement and enforce the expanded program.

Where the State uses the flexibility built into EPA's rule as part of its approved primacy program, § 142.16(a)(2) requires that a State establish, as part of its revised primacy program, enforceable requirements and procedures. The EPA rule provisions that explicitly authorize primacy States to augment the EPA requirements are as follows:

- *Table 1 to 40 CFR 141.201(a) (Item 3v)*—To require public water systems to give a public notice for violations or situations other than those listed in Appendix A of Subpart Q of Part 141. This supports existing State authority under primacy to add notice requirements not explicit in the EPA rule, to tailor its program to respond to its unique public notification policies and situations.

• *40 CFR 141.201(c)(2)*—To permit public water systems, under the specific circumstances listed in § 141.201(c)(2), to limit the distribution of the public notice to persons served by the portion of the distribution system that is out of compliance. This authorizes the State to use its discretion to respond to unique situations where strict compliance with EPA's baseline requirements may lead to an ineffective notice or unnecessary costs.

• *Table 1 of 40 CFR 141.202(a) (Items 5, 6, and 8)*—To require public water systems to give a Tier 1 public notice (rather than a Tier 2 or Tier 3 notice) for violations or situations listed in Appendix A of Subpart Q of Part 141 of this chapter. This supports existing State authority under primacy to elevate specific violations to Tier 1 where the EPA default Tier requirement does not meet the State's public health objectives. EPA expects States to use this authority when needed to respond to situations where there is significant potential for adverse health effects from short-term exposure. In particular, EPA needs the State to exercise its authority to elevate single exceedance turbidity violations to a Tier 1 when consultation under § 141.203(b)(3) indicates high potential for short-term health risk.

• *40 CFR 141.202(b)(3)*—To require public water systems to comply with additional Tier 1 public notification requirements set by the State subsequent to the initial 24-hour Tier 1 notice, as a result of their consultation with the State required under § 141.202(b)(2). This supports existing State authority under primacy to add supplemental Tier 1 requirements as a result of the Tier 1 consultation required under § 141.202(b)(2). EPA expects States to use this authority to ensure effective, enforceable follow-up to the initial Tier 1 notice. The EPA rule does not require any specific follow-up action by the water system after the initial Tier 1 notice, deferring totally to the primacy agency to define all supplemental requirements.

• *40 CFR 141.202(c), 141.203(c) and 141.204(c)*—To require a different form and manner of delivery for Tier 1, 2 and 3 public notices. This supports existing State authority under primacy to use its discretion to tailor the public notice delivery to the specific situation or specific approach preferred by the State, as long as it otherwise meets primacy requirements.

• *Table 1 to 40 CFR 141.203(a) (Item 2)*—To require the public water systems to provide a Tier 2 public notice (rather than Tier 3) for monitoring or testing procedure violations specified by the State. This supports existing State authority under primacy to elevate the notice requirement for a monitoring violation to Tier 2. The default tier level for all monitoring violations is Tier 3 unless the primacy agency chooses to elevate the requirement to a Tier 2 notice when warranted. EPA expects States to build this additional authority into their approved programs to ensure that notices for monitoring violations posing potential serious adverse health effects are delivered within 30 days.

• *40 CFR 141.203(b)(1)*—To grant public water systems an extension of up to three months for distributing the Tier 2 public notice, in appropriate circumstances other than those specifically prohibited by the rule. This authorizes the State to use its discretion, where appropriate, to extend the Tier 2 notice deadline to give water systems some relief from EPA's default deadline.

• *40 CFR 141.203(b)(2)*—To grant a different repeat notice frequency for the Tier 2 public notice in appropriate circumstances (other than those specifically prohibited by the rule), but no less frequently than once per year. This authorizes the State to use its discretion, where appropriate, to allow less frequent repeat notice frequency for violations to give water systems some relief from EPA's default repeat notice requirement.

• *40 CFR 141.203(b)(3)*—To respond within 24 hours to a request for consultation by the public water system to determine whether a Tier 1 (rather than a Tier 2) notice is required for a turbidity MCL violation under § 141.13(b) or a SWTR/IESWTR TT violation due to a single exceedance of the maximum allowable turbidity limit. This ensures that the State is prepared to respond to the request for consultation from the water system after it learns of a violation of the turbidity single exceedance limit. EPA expects States to establish a process that would lead to a determination within the 24-hour window to avoid a ''no action'' default to a Tier 1 notice on every turbidity single exceedance violation.

• *40 CFR 141.205(c)(2)*—To determine the specific multilingual requirement for public water systems, including defining ''large proportion of non-English-speaking consumers.'' This supports existing State authority under primacy to augment the EPA rule to clarify who must comply with the EPA requirements and how the requirements will be met. EPA expects States to provide more specific direction to water systems than is provided under the EPA rule, particularly by developing criteria for determining which systems serve a large proportion of non-English speaking consumers.

EPA believes that State adoption and implementation of the revised public notification rule should, where possible, be coordinated with the State implementation of the CCR rule. EPA encourages and will support efforts by the State to merge the adoption and implementation of the two rules because of the close interrelationship between the two programs. Merging implementation of the two programs will make both programs more effective and understandable to the water systems and to the public.

Although the final date for adoption of the revised public notification rule is two years from the date of today's rule, States may adopt the revised public notification requirements earlier. The new requirements will then go into effect when the State's revised regulations adopting the new requirements go into effect. EPA encourages States to take immediate steps to determine how the more streamlined and effective public notice requirements can be integrated into both the ongoing public notice programs and the emerging CCR program. Early adoption of the new rule will enable water systems to take early advantage of the efficiencies and flexibility built into the revised program.

EPA expects to issue interim primacy guidance shortly, which will outline the new requirements and describe how they can most effectively be adopted and implemented by the States. The guidance will include recommended steps States can take, at their option, to combine the new public notification rule with the CCR rule to better coordinate the related primacy and implementation activities.

Comments Requested on Proposal: EPA requested comment on the proposed requirements States would have to follow to develop the approved primacy program revision and on other changes to the State record keeping and reporting requirements related to the public notification rule. EPA also requested comment on the proposed interpretation of the primacy standard to be applied for review of State alternative programs. All comments received on the primacy proposal were in support of allowing States the full two years to adopt the revised public notification regulation. Several commenters saw no need to set special primacy requirements for provisions allowing States to be more stringent than EPA's rule, since States already have that authority. Several other commenters asked EPA to establish criteria in the regulation for when EPA expects States to elevate violations to a more stringent violation tier. A

significant minority of commenters asked that EPA set more specific requirements in the final rule on State compliance reporting and tracking.

EPA Response to Comments: The final rule retains the requirement, as proposed, that States must revise their approved primacy programs, including addressing the new special primacy requirements under Section 142.16(a)(2), to retain primacy. The proposed list of special primacy conditions was modified in the final rule to conform to changes made in other sections of the rule and to make other edits to improve the presentation. The basic primacy requirements, however, were unchanged from the proposal.

In response to commenters who questioned the need for special primacy conditions where the State chooses to be more stringent, EPA has reaffirmed the requirement that the primacy revision package submitted to EPA for approval must address all the program elements where EPA explicitly allows the State to set different requirements from the EPA rule requirements. The advantage of including all the program elements in the approved primacy program where the State is explicitly allowed to be different is that it enables EPA and the State to jointly implement and enforce the expanded program. EPA recommends that primacy States take advantage of this opportunity to work together to develop an effective State public notification program. Under the final rule, States are of course still free to establish more stringent requirements outside the approved primacy program.

In response to other commenters requesting that the final rule include criteria for when EPA expects States to be more stringent, EPA has chosen not to specify additional criteria on how the States should use the discretion authorized in the EPA rule. The final rule provisions, in most cases, do establish boundaries on the use of the State discretion. Beyond that, EPA believes the State program should work with EPA to address those questions during the primacy revision approval process. EPA is acutely interested in how the flexibility is used and how EPA and the States can jointly implement and enforce this tailored program. EPA wants to work with States individually to fashion a flexible program which meets the State's needs.

In response to comments concerning EPA's specific expectations regarding State compliance reporting and tracking, EPA believes that these questions are most appropriately addressed in the primacy guidance rather than the regulations. The final rule does reaffirm the requirement that primacy agencies report public notification violations to EPA on a quarterly basis. It also requires public water systems to submit a compliance certification, with copies of the public notices, to the State within ten days after every public notification event. EPA will address compliance and reporting strategies in its guidance to primacy agencies on implementing the PN rule.

V. Changes to Consumer Confidence Report (CCR) Regulation To Be Consistent With the Final Public Notification Regulation

Today's Rule: The Consumer Confidence Report rule is updated today in several aspects, to be better aligned with the final public notification rule being published today. First, the three Appendices to Subpart O, which contain various pieces of information about the contaminants that EPA regulates, are deleted and the information is combined into a new, comprehensive Appendix A to Subpart O. This new single Appendix makes the information more accessible. EPA will republish the entire table in each final rule that changes the information it contains. As a result of this change, a number of references to the three appendices are revised to reflect the new combined Appendix A. EPA will consider at a later date whether and how to further align the CCR and public notification rules by combining the Appendices in the two rules, since much of the information is similar.

Second, the new Appendix A to Subpart O is updated to contain regulatory and health effects information on each of the disinfectants and disinfection byproducts regulated in the Stage 1 D/DBP rule that EPA published in December 1998. The health effects language was proposed in the public notification rule on May 13, 1999. The final language being published today in Appendix A to Subpart O is identical to that which is established through today's public notification regulations under Subpart Q. Although systems will not be required to include information in their CCRs on these contaminants until after the effective date of the new regulations, some systems may choose to do so earlier.

Third, the standard health effects language for fluoride in the current CCR regulations is revised to be identical to the health effects language required for violation of the fluoride MCL in the public notification rule published today. The revised language incorporates language on the cosmetic effects (*i.e.,* dental fluorosis) that may occur at levels above 2 mg/l (the SMCL). The MCL standard is 4 mg/l. With this change, the health effects language required for all the regulated contaminants in the public notification rule is now identical to the language required in the CCR rule.

Fourth, the § 141.155(h) requirement that systems retain copies of their CCRs for at least five years is amended to require retention for three years. EPA is making this change to slightly reduce the paper storage burden on water suppliers and to make this requirement consistent with other drinking water record retention requirements.

Finally, definitions for Maximum Residual Disinfectant Level (MRDL) and Maximum Residual Disinfectant Level Goal (MRDLG), modeled on the current definitions for MCL and MCLG, are added to the regulatory terms that systems must include in their CCRs under 141.153(c) when reporting on contaminants governed by them. EPA considers these changes to be straightforward and noncontroversial. Since the new requirements to include the definitions for MRDL and MRDLG are consistent with the similar requirements to include other definitions, EPA believes no prior notice and opportunity to comment are required.

The final public notification rule is closely related to the Consumer Confidence Report (CCR) regulation promulgated in August, 1998 [63 FR 44511 (August 19, 1998)], as amended today. The final rule uses identical language from the CCR rule where there is an overlap, defers to the CCR process where the public notification objectives could be effectively accomplished through the CCR, and otherwise uses language consistent with the CCR when appropriate.

- *Health Effects Language (§ 141.205(d)(1), Appendix B to Subpart Q).* Language on potential health effects of violations is required both for the CCR and public notification. The final rule requires identical health effects standard language for the public notice and the CCR rule, as amended today under Appendix A to Subpart O).
- *Use of CCR for Some Public Notices (§ 141.204(d)).* The CCR requires an annual summary of all violations that have occurred in the previous year (§ 141.153(f)). The final public notification rule allows community water systems, at their option, to use the Consumer Confidence Report as the mechanism to notify their customers of any or all Tier 3 violations, as long as those violations occurred within the last 12 months, the content requirements of § 141.205 are complied with, and the delivery requirements under

§ 141.204(c) are met. The final rule also allows public water systems that are not required to distribute a CCR to use an annual report of all their Tier 3 violations or variances or exemptions, in lieu of individual public notices. In all cases, the CCR or other annual report would have to follow the requirements of the public notice rule to be used for this purpose.

• *Notice of the Availability of the Results of Unregulated Contaminant Monitoring (§ 141.207).* The 1996 SDWA amendments for both the CCR and public notification contained provisions related to giving notice of the results of unregulated contaminant monitoring required by EPA. EPA is deferring to the requirement in the CCR rule (under § 141.153(d) and (e)) to meet the public notification statutory provision. The CCR rule requires that such information be included in the annual CCR for community water systems when contaminants are detected. The final public notification rule does, however, contain a special public notice requirement (under § 141.207) to announce the availability of the results of the unregulated contaminant monitoring required under the Unregulated Contaminant Monitoring Rule (UCMR).

• *Certification by PWS That Public Notification Requirements Are Met (§ 141.31(d)).* The final rule adds a new requirement that public water systems provide a certification to the primacy agency, along with a copy of their public notices, that all requirements have been met. This is patterned after (although not identical) to the certification requirement in the CCR regulation (§ 141.155(c)).

• *Use of Multilingual Notices (§ 141.205(c)(2)).* The CCR regulation requires that in communities with a large proportion of non-English speaking residents, as determined by the primacy agency, the report must contain information in the appropriate language(s) regarding the importance of the notice or contain a telephone number or address where persons served may contact the water system to obtain a translated copy of the notice or to request assistance in the appropriate language. The final public notification rule uses the exact language in the CCR rule to set the multilingual requirements. The public notification rule, however, includes a second provision not in the CCR rule that requires PWSs to comply with the multilingual requirements where appropriate, even when the primacy agency opts not to make a determination. (§ 141.153(h)(3)).

Comments Requested on Proposal: EPA requested comment on the approach in the proposed rule aligning the public notification requirements with the parallel requirements in the CCR rule for the five areas and for any other areas that would make compliance with the two rules more effective and efficient. Commenters overwhelmingly supported EPA's proposed intention to closely coordinate the CCR and public notification rule language. A number of commenters, however, disagreed or questioned how EPA proposed to do this for certain program elements.

EPA Response to Comments: In the final rule published today, EPA continues to support a close regulatory relationship between the CCR and the public notification rules and strongly encourages primacy agencies and water systems to integrate the two requirements in implementation where it makes sense. EPA's response to commenters who questioned how EPA planned to coordinate the CCR and public notification rules is addressed in the individual preamble sections related to each program element.

VI. Cost of Rule

EPA has estimated the costs both for public water systems, which must comply with the requirements of the revised public notification rule published today, and the primacy agencies, which must implement the new requirements on behalf of EPA.

For *public water systems*, the estimated costs of complying with the new regulation are divided into three component activities: notice preparation costs, notice distribution costs, and costs of repeat notices. Only public water systems with a violation or other situation requiring a public notice incur costs under this rule.

• *Notice preparation costs* include those costs that a public water system must incur to comply with the requirements regardless of how many copies of the notice it must deliver. These costs include the labor hour costs associated with becoming familiar with the requirements for the notice, collecting data regarding monitoring results and the violation, consulting with the primacy agency (when necessary), preparing the technical content of the public notification in a format suitable for distribution, identifying the recipients of the notice, and providing instructions about production of the notice.

• *Notice distribution costs* are costs that increase or decrease along with the number of public notices to be delivered. These costs include costs of producing the reports (costs of paper and photocopying or printing), postage costs when the notice is mailed, costs of posting notices in specified locations, and other labor hour costs of producing and delivering the notices.

• *Repeat notice costs* involve the costs of updating the initial notice and delivering a second copy of the notice, if the violation is not corrected within the specified time period.

For *primacy agencies*, the estimated incremental costs of implementing the new requirements are divided into four components:

• Cost of revising primacy packages to incorporate the new requirements;

• Costs of consulting with public water systems to clarify notice requirements on a case-by-case basis;

• Costs of receiving and reviewing the public water system compliance certification and copies of the notices; and

• Costs of filing and maintaining the public notification records.

Table D provides a summary of the estimated average annual cost and labor hours to public water systems and to the State primacy agencies. The public water system costs are broken out by size of the system. The combined total cost per year to both the PWS and the primacy agencies is $13,543,277. The combined total burden hours are 748,811.

TABLE D.—AVERAGE ANNUAL COST AND LABOR HOURS FOR PUBLIC WATER SYSTEMS AND PRIMACY AGENCIES

Summary table	Total cost per year * (1)	Total labor hours (2)	Number of systems in violation ** (3)	Labor hours per system (2)/(3) (4)	Cost per system (1)/(3) (5)
PWS:					
PWS serving 25–500	$5,218,727.77	515,656	31,187	16.53	$167.34
PWS serving 501–3,300.	1,482.639.78	116,007	3,740	31.02	396.43

TABLE D.—AVERAGE ANNUAL COST AND LABOR HOURS FOR PUBLIC WATER SYSTEMS AND PRIMACY AGENCIES—Continued

Summary table	Total cost per year* (1)	Total labor hours (2)	Number of systems in violation** (3)	Labor hours per system (2)/(3) (4)	Cost per system (1)/(3) (5)
PWS serving 3,301–10,000.	1,052,496.62	28,799	854	33.72	1,232.43
PWS serving 10,001–100,000.	2,074,925.70	27,379	632	43.32	3,283.11
PWS serving over 100,000.	2,171,777.56	2,550	54	47.23	40,218.10
Totals for PWS	12,000,567.43	690,390	36,467 PWS	18.93 hours per PWS	329.08 per PWS
State Primacy Agencies	1,542,709.87	58,420	56 Primacy agencies	1,043.22 hours per primacy agency.	27,548.39 per primacy agency
Totals	$13,543,277.30	748,811			

*Costs include both labor hour costs and operations and maintenance (O&M) costs.
**Source: FY 1998 inventory and violation data from Safe Drinking Water Information System (SDWIS), January, 1999.

The Agency estimates that the average annual cost to all public water systems with one or more violations during the year is $12,000,567, including the costs for 690,390 labor hours and the costs for copying, postage and other related O&M costs. This is an average annual cost of $329.08 for each of the 36,467 public water systems required to comply with the public notice requirements because they had one or more violations during the year. As shown in Table D, the average annual per system costs and labor hours vary significantly by size of the water system:

• The dollar costs include both labor hour costs and non-labor costs. The non-labor costs incurred are principally to cover the costs of copying and mailing the notice. Because the cost of distribution varies directly with the number of persons served, the cost per water system for the large and very large water systems is many times higher than the cost per water system for small and very small systems (e.g., $167.34 per system serving less than 500 people vs. $40,218.10 per system serving over 100,000 people).

• The labor hours vary by both the type and size of the water system. For example, a non-community water system may post the notice, a significantly lower labor hour burden than preparing a mailing or hand delivering the notice. System size also makes a significant difference in total labor costs. The labor estimated to prepare and distribute the notice for a very small system is 16.5 hours. For very large systems, the labor hour estimate is 47.2 hours, almost three times the rate estimated for the very small systems.

The Agency estimates the annual primacy agency costs and labor hours to be $1,542,710 and 58,420 hours. The average annual cost per primacy agency is estimated at $27,548 per primacy agency ($1,542,710 divided by 56) and the annual labor hours per primacy agency are estimated at 1,043 hours per primacy agency (58,420 divided by 56). This does not include the costs for EPA direct implementation of the regulatory program in Wyoming, the District of Columbia, and on Indian lands.

The paperwork burden associated with the current public notification requirements, which are being revised by today's action, was included in the baseline drinking water ICR (OMB Control No. 2040–0090, EPA ICR# 270.39). The estimated burden under ICR#270.39 was 955,191 hours, and the costs were $21,969,393. This included the estimated cost to public water systems only. ICR#270.39 did not include any incremental costs to the primacy agencies.

To estimate the change in the burden for public water systems under the revised rule, EPA recalculated the burden numbers under ICR#270.39 to provide a common basis for comparison. The ICR burden estimate under ICR#270.39 could not be used as the basis for comparison because it used different external cost and workload assumptions. First, the cost assumptions in ICR#270.39 used lower postage and labor rates than are currently in place. Second, it assumed the violation levels that were in place when ICR#270.39 was developed, which are quite different from the violation levels assumed for the revised ICR. Third, some activities were omitted from ICR#270.39, such as repeat notices.

The combined changes in the average annual burden and costs to primacy agencies and PWSs, based on comparing the estimate under the revised rule to the adjusted estimate under the current rule, are shown in the table below:

CHANGES IN AVERAGE ANNUAL BURDEN AND COST ESTIMATES (FOR PWS AND PRIMACY AGENCY)

[Rounded to nearest 10,000 for burden and nearest $100,000 for cost]

	Current rule (Recalculated) [1]	Revised rule ICR	Decrease	Percent change
Burden	955,000 hours	748,000 hours	206,000 hours	21.6
Cost	$22,100,000	$13,500,000	$8,600,000	38.8

[1] To make the current rule estimate and revised rule estimate comparable, the current rule estimate was adjusted to be the sum of the costs under the revised rule plus the estimated cost savings that will be realized under the revised rule.

Two programmatic changes associated with the revised rule account for the bulk of the reduction in burden and cost estimates from the current rule under § 141.32:

• The revised rule changes both the timing and method of delivery options for Tier 3 violations—

—The revised rule would require notice within one year after the occurrence of the violation rather than within three months, as required by the current rule. Systems with monitoring and testing procedure violations occurring several times throughout the year are able, under the revised rule, to consolidate their notices into one annual notice. The current rule limits the PWS's ability to combine multiple violations into a single notice to those occurring within the prior three months. For estimating the burden reduction from this change, EPA assumes that, under the current rule, systems with violations send out a statistical average of 1.5 notices per year.

—The revised rule allows community water systems to meet the public notice requirements for Tier 3 through the existing Consumer Confidence Report (CCR). Tier 3 violations are primarily monitoring or testing procedure violations. Systems that would otherwise incur a large labor burden and postage burden for distributing a mail notice and paying for a newspaper notice will be able to insert the text of the notice into the CCR and incur no additional costs. EPA estimates that half of all community water systems serving less than 10,000 and all community water systems serving more than 10,000 will use the CCR for Tier 3 notices.

—The average annual estimated burden reduction associated with the changes to the timing and method of delivery for Tier 3 notices is approximately 186,000 hours (19.5 percent) and the cost reduction is approximately $6,300,000 (28.7 percent).

• The revised rule changes the required methods of delivery for Tiers 1 and 2 notices. The current rule requires both newspaper and mail delivery for all tiers, although the primacy agency could waive the mail requirement if it determines the violation has been resolved within a given time. Those systems for whom no newspaper outlet is available are allowed to hand deliver or post instead of mailing and using the newspaper. Under the current rule, systems with Tier 1 violations must also issue a notice via television or radio. The revised rule requires only one method of delivery for Tier 2—mail or hand delivery (or posting for non-community systems). The burden reduction for Tier 2 is small, because it eliminates only newspaper notices, which are estimated to take only 1 hour of labor. For Tier 1, however, systems will have the option of issuing the notice via electronic media, hand delivery, or posting. The burden reduction resulting from the change in the Tier 1 and Tier 2 method of delivery requirements in the revised rule would be approximately 20,000 hours (2.1 percent), and the cost reduction would be $2,300,000 (10.2 percent).

The estimated total average annual savings resulting from the above revisions to the public notification requirements are approximately 206,000 hours (21.6 percent) and $8,600,000 (38.8 percent).

In considering the burden and cost reduction for the revised rule relative to the current requirements under § 141.32, it is important to keep in mind that this comparison is based on assuming full compliance with both rules. In fact, as documented in the 1992 GAO report on the public notification program (GAO/RCED–92–135, June 1992), there has been widespread noncompliance with the public notification requirements. EPA expects that by clarifying and streamlining the requirements in the revised regulation, the revised rule will result in a significantly higher level of compliance with the public notification requirements. To the extent that this occurs, there will also be an increase in State and water system resources devoted to public notification, despite the savings estimated here because of the streamlined revised rule. On the other hand, for those systems that have been complying with public notice requirements all along, the revised rule should result in genuine cost and burden savings.

For more information about the costs of the rule and how EPA developed the estimates, see the Supporting Statement for the EPA Information Collection Request (ICR #1898.02) and the Regulatory Flexibility Screening Analysis in the EPA docket for this rule.

VII. Other Administrative Requirements

A. Executive Order 12866: Regulatory Review

Under Executive Order 12866 [58 FR 51735 (October 4, 1993)], the Agency must determine whether the regulatory action is ''significant'' and therefore subject to OMB review and the requirements of the Executive Order. The Order defines ''significant regulatory action'' as one that is likely to result in a rule that may:

(1) Have an annual effect on the economy of $100 million or more, or adversely affect in a material way the economy, a sector of the economy, productivity, competition, jobs, the environment, public health or safety, or State, local, or tribal governments or communities;

(2) Create a serious inconsistency or otherwise interfere with an action taken or planned by another agency;

(3) Materially alter the budgetary impact of entitlements, grants, user fees, or loan programs or the rights and obligations of the recipients thereof; or

(4) Raise novel legal or policy issues arising out of the legal mandates, the President's priorities, or the principles set forth in the Executive Order.

It has been determined that this final rule action is not a ''significant regulatory action'' under the terms of Executive Order 12866 and is therefore not subject to OMB review.

B. Regulatory Flexibility Act (RFA), as amended by the Small Business Regulatory Enforcement Fairness Act of 1996 (SBREFA), 5 U.S.C. 601 et seq.

The RFA generally requires an agency to prepare a regulatory flexibility analysis of any rule subject to notice and comment rulemaking requirements under the Administrative Procedure Act or any other statute unless the agency certifies that the rule will not have a significant economic impact on a substantial number of small entities. Small entities include small businesses, small organizations, and small governmental jurisdictions.

The RFA provides default definitions for each type of small entity. It also authorizes an agency to use alternative definitions for each category of small entity, ''which are appropriate to the activities of the agency,'' after proposing the alternative definition(s) in the **Federal Register** and taking comment (5 U.S.C. secs. 601(3)–(5)). In addition to the above, to establish an alternative small business definition, agencies must consult with Small Business Administration's Chief Counsel for Advocacy.

For purposes of assessing the impacts of today's rule on small entities, EPA considered small entities to be public water systems serving 10,000 or fewer persons. In accordance with the RFA requirements, EPA proposed using this alternative definition in the **Federal Register** notice for the proposed Consumer Confidence Report (CCR) regulation (63 FR 7620, February 13, 1998), requested public comment, consulted with the Small Business Administration on the alternative definition for small businesses, and finalized the alternative definition in the final CCR regulation (63 FR 44511, August 19, 1998). As stated in that Final Rule, the alternative definition would be applied to other drinking water regulations as well.

After considering the economic impacts of today's final rule on small entities, I certify that this action will not have a significant economic impact on a substantial number of small entities. We have determined that all small entities will experience an impact of much less than one percent of their annual revenues or expenditures. The analyses supporting this certification are contained in the ''Regulatory Flexibility Screening Analysis'' prepared for this final rule. About 64,000 small water systems are impacted by the revised public notification rule: 24,000 small governments, 31,000 small businesses, and 9,000 small non-profit organizations. We compared for each small entity category the ratio of the average annual per system compliance costs to the estimated average annual per system revenue and expenditures. The ratio for small government entities ranged from 0.19 percent for systems serving less than 500 people to 0.02 percent for systems serving between 3,301 to 10,000 people. The ratio for small business entities ranged from 0.01 percent for systems serving less than 500 people to 0.03 percent for systems serving between 3,301 to 10,000 people. The ratio for small non-profit organization entities ranged from 0.06 percent for systems serving less than 500 people to 0.01 percent for systems serving between 3,301 to 10,000 people.

Although this final rule will not have a significant economic impact on a substantial number of small entities, EPA nonetheless has tried to reduce the impact of this rule on small entities by providing flexibility to public water systems on the method of delivery of the public notice and by offering all public water systems the opportunity to use an annual report of violations in lieu of individual Tier 3 notices. In addition, all community water systems are encouraged to use the CCR to meet the requirements of the public notice rule wherever appropriate. (Note that to use the CCR, many small systems would have to distribute their CCR more widely to meet the public notification distribution requirements.) In addition, if the primacy agency permits, systems may be allowed to provide notice to only the portion of the distribution system that is affected by the violation. Finally, small community water systems and all non-community water systems may hand deliver or post the notice in lieu of mailing, reducing substantially their overall cost of compliance with this rule.

C. Paperwork Reduction Act

The Office of Management and Budget (OMB) has approved the information collection requirements contained in this rule under the provisions of the *Paperwork Reduction Act,* 44 U.S.C 3501 *et seq.* and has assigned OMB control number 2040–0209.

This information is being collected in order to fulfill the statutory requirements of section 114 of the Safe Drinking Water Act Amendments (SDWA) of 1996 (Public Law 104–182) enacted August 6, 1996. Public notice of violations is an integral part of the public health protection and consumer right-to-know provisions of the 1996 SDWA amendments. The public notification requirement is one of six interrelated provisions now included in the SDWA, related to providing information to the public. Responses are mandatory. None of the information submitted under the revised rule is confidential business information.

The burden to public water systems is based on the cost of the rule discussed under Section VI of the Preamble. Burden means the total time, effort, or financial resources expended by persons to generate, maintain, retain, or disclose or provide information to or for a Federal agency. This includes the time needed to review instructions; develop, acquire, install, and utilize technology and systems for the purposes of collecting, validating, and verifying information, processing and maintaining information, and disclosing and providing information; adjust the existing way to comply with any previous applicable instructions and requirements; train personnel to be able to respond to a collection of information; search data sources; complete and review the collection of information; and to transmit or otherwise disclose the information.

The total average annual burden to both public water systems and primacy agencies is 748,811 hours at an annual cost of $13,543,277. The cost estimate includes both the labor hour costs and the operations and maintenance (O&M) costs of implementing the rule.

The average annual burden to public water systems to meet the requirements of the revised public notification rule is 690,390 hours at an annual cost of $12,000,567. The burden estimate is the sum of the costs of three component activities: notice preparation costs; notice distribution costs; and costs of repeat notices. The costs to the public water systems include labor and non-labor costs, such as the costs to copy and mail the public notices where required. Public water systems are required to comply with the public notification rule if they have one or more violations of National Primary Drinking Water Regulations (NPDWR) or have other situations requiring a public notice. The number of public water systems estimated to have violations on an annual basis is 36,467. The annual average burden per public water system violating one or more drinking water standards is $329.08 and 18.9 hours.

The average annual burden to primacy agencies of implementing the new public notification regulations is 58,420 hours at an annual cost of $1,542,710. The burden estimate is the sum of four component activities: cost of revising primacy packages to incorporate the new requirements; costs of consulting with public water systems; costs of receiving and reviewing the compliance certification and notice copies received from the public water system; and the costs of filing and maintaining the public water system notification records. The costs to the primacy agency include labor costs only. Primacy agencies are required to adopt and implement the new public notification regulation as a condition of maintaining primacy. Fifty-six States and Territories currently have primacy under the Safe Drinking Water Act. EPA directly implements the regulatory program in Wyoming, Washington, D.C., and the Indian Lands. The average annual burden for each of the 56 States and Territories with primacy to implement the revised public notification rule is $27,548 and 1,043 hours per primacy agency. For additional detail, see Section VI of this preamble.

An Agency may not conduct, or sponsor, and a person is not required to respond to, a collection of information unless it displays a currently valid OMB control number. The OMB control numbers for EPA's regulations are listed in 40 CFR Part 9 and 48 CFR Chapter 15. EPA is amending the table in Part 9 of currently approved ICR control numbers issued by OMB for various regulations to list the information requirements contained in this final rule.

D. Executive Order 13132: Federalism

Executive Order 13132, entitled ''Federalism'' (64 FR 43255, August 10, 1999), requires EPA to develop an accountable process to ensure ''meaningful and timely input by State and local officials in the development of regulatory policies that have federalism implications.'' ''Policies that have federalism implications'' is defined in the Executive Order to include regulations that have ''substantial direct effects on the States, on the relationship between the national government and the States, or on the distribution of

power and responsibilities among the various levels of government.''

Under Section 6 of Executive Order 13132, EPA may not issue a regulation that has federalism implications, that imposes substantial direct compliance costs, and that is not required by statute, unless the Federal government provides the funds necessary to pay the direct compliance costs incurred by State and local governments, or EPA consults with State and local officials early in the process of developing the proposed regulation. EPA also may not issue a regulation that has federalism implications and that preempts State law unless the Agency consults with State and local officials early in the process of developing the proposed regulation.

This final rule does not have federalism implications. It will not have substantial direct effects on the States, on the relationship between the national government and the States, or on the distribution of power and responsibilities among the various levels of government, as specified in Executive Order 13132. The rule published today replaces an existing rule and represents a significant streamlining of requirements from those currently in place. Thus, the requirements of section 6 of the Executive Order do not apply to this rule. Although section 6 of Executive Order 13132 does not apply to this rule, EPA consulted extensively with State and local officials in developing this rule. See Section II of this preamble for more detail regarding our work with the State and local government representatives.

E. Executive Order 13084: Consultation and Coordination With Indian Tribal Governments

Under Executive Order 13084, EPA may not issue a regulation that is not required by statute, that significantly or uniquely affects the communities of Indian Tribal governments, and that imposes substantial direct compliance costs on those communities, unless the Federal government provides the funds necessary to pay the direct compliance costs incurred by the Tribal governments, or EPA consults with those governments. If EPA complies by consulting, Executive Order 13084 requires EPA to provide to the Office of Management and Budget, in a separately identified section of the preamble to the rule, a description of the extent of EPA's prior consultation with representatives of affected Tribal governments, a summary of the nature of their concerns, and a statement supporting the need to issue the regulation. In addition, Executive Order 13084 requires EPA to develop an effective process permitting elected officials and other representatives of Indian Tribal governments ''to provide meaningful and timely input in the development of regulatory policies on matters that significantly or uniquely affect their communities.''

Today's final rule does not significantly or uniquely affect the communities of Indian Tribal governments, nor does it impose substantial direct compliance costs on such communities. The impact on Tribal governments is not unique in that this rule applies equally to all public water systems, including those owned and operated by Federal, State, and local governments. Public water systems on Indian lands incur costs under the public notification rule only if they violate a national primary drinking water regulation or have a variance or exemption from EPA. The public notification requirements will in most cases be met either through hand delivery of a single notice to all persons served or by posting the notice in conspicuous locations. Costs of meeting these requirements will be minimal. In fact, the public notification costs resulting from this rule are less than those required for full compliance with the public notification regulations currently in effect under § 141.32. Accordingly, the requirements of section 3(b) of Executive Order 13084 do not apply to this final rule.

F. Unfunded Mandates Reform Act

Title II of the Unfunded Mandates Reform Act of 1995 (UMRA), Public Law 104–4, establishes requirements for Federal agencies to assess the effects of their regulatory actions on State, local, and Tribal governments and the private sector. Under Section 202 of the UMRA, EPA generally must prepare a written statement, including a cost-benefit analysis, for proposed and final rules with ''Federal Mandates'' that may result in expenditures to State, local, and Tribal governments, in the aggregate, or to the private sector, of $100 million or more in any one year. Before promulgating an EPA rule for which a written statement is needed, section 205 of the UMRA generally requires EPA to identify and consider a reasonable number of regulatory alternatives and adopt the least costly, most cost-effective or least burdensome alternative that achieves the objectives of the rule. The provisions of section 205 do not apply when they are inconsistent with applicable law. Moreover, section 205 allows EPA to adopt an alternative other than the least costly, most cost-effective or least burdensome alternative if the Administrator publishes with the final rule an explanation why that alternative was not adopted. Before EPA establishes any regulatory requirements that may significantly or uniquely affect small governments, including Tribal governments, it must have developed under section 203 of the UMRA a small government agency plan. The plan must provide for notifying potentially affected small governments, enabling officials of affected small governments to have meaningful and timely input in the development of EPA regulatory proposals with significant Federal intergovernmental mandates and informing, educating, and advising small governments on compliance with the regulatory requirements.

EPA has determined that this rule does not contain a Federal mandate that may result in expenditures of $100 million or more for State, local, and Tribal governments, in the aggregate, or the private sector in any one year. The estimated total annual average cost of the final rule is $13,543,277. (See Section VI of the Supplementary Information.) Thus, today's rule is not subject to the requirements of sections 202 and 205 of the UMRA. This rule will establish requirements that affect small community water systems. However, EPA has determined that this rule contains no regulatory requirements that might significantly or uniquely affect small governments because the regulation reduces the burden associated with the public notification regulations currently in effect under § 141.32 and requires a minimal expenditure of resources. Thus, today's rule is not subject to the requirements of section 203 of UMRA.

G. Executive Order 12898: Environmental Justice

Pursuant to Executive Order 12898 (59 FR 7629, February 16, 1994), the Agency has considered environmental justice related issues with regard to the potential impacts of this action on the environmental and health conditions in low-income and minority communities. The Agency believes that several of today's requirements will be particularly beneficial to these communities:

- Public water systems would be required to distribute the notice to all persons served, both through the use of required delivery methods and through the use of additional measures reasonably calculated to reach other persons served, if they would not normally be reached by the required method. In addition, the notice to bill-

paying customers must include standard language encouraging those receiving the public notice to make the notice available to other consumers who are not bill-paying customers (e.g., renters, transients, students).

• Public notices would include information on what the consumers should do to minimize the health risk from drinking water in violation of EPA standards and when to seek further medical advice. All notices would be required to include the name, address, and phone number of the water system official who can provide further information.

• Public water systems, where appropriate, must include information on the importance of the notice and other information in languages other than English. Primacy States may, at their option, augment these multilingual requirements. For example, a primacy State could define when a system is serving a population with a large proportion of non-English speaking consumers. Thus, the State could specify which water systems must comply with the augmented State requirements.

H. Executive Order 13045: Protection of Children From Environmental Health Risks and Safety Risks

Executive Order 13045, ''Protection of Children from Environmental Health Risks and Safety Risks'' (62 FR 19885, April 23, 1997), applies to any rule that: (1) is determined to be ''economically significant'' as defined under E.O. 12866, and (2) concerns an environmental health or safety risk that EPA has reason to believe may have a disproportionate effect on children. If the regulatory action meets both criteria, the Agency must evaluate the environmental health or safety effects of the planned rule on children, and explain why the planned regulation is preferable to other potentially effective and reasonably feasible alternatives considered by the Agency.

The final rule is not subject to the Executive Order because it is not economically significant as defined in E.O. 12866 and because the Agency does not have reason to believe the environmental health or safety risks addressed by this action present a disproportionate risk to children. The purpose of the public notification rule is to provide a public notice to persons served when a violation of EPA drinking water standards occurs, to enable consumers to avoid health and safety risks from potential exposure to harmful contaminants in the drinking water. The regulation addresses the particular risks that certain contaminants may pose by considering such risks in assigning contaminants to the appropriate tier and by identifying such risks in the required health effects language, with specific reference to risks to children, where appropriate. The public notice requirements, however, apply to potential health and safety risks to all consumers and all vulnerable populations, and are not targeted specifically to address a disproportionate risk to children.

I. National Technology Transfer and Advancement Act

As noted in the proposed rule, Section 12(d) of the National Technology Transfer and Advancement Act of 1995 (NTTAA), Public Law No. 104–113, Section 12(d) (15 U.S.C. 272 note) directs EPA to use voluntary consensus standards in its regulatory activities unless to do so would be inconsistent with applicable law or otherwise impractical. Voluntary consensus standards are technical standards (e.g., materials specifications, test methods, sampling procedures, and business practices) that are developed or adopted by voluntary consensus standards bodies. The NTTAA directs EPA to provide Congress, through OMB, explanations when the Agency decides not to use available and applicable voluntary consensus standards. This action does not involve technical standards. Therefore, EPA did not consider the use of any voluntary consensus standards.

J. Congressional Review Act

The Congressional Review Act, 5 U.S.C. 801 *et seq.*, as added by the Small Business Regulatory Enforcement Fairness Act of 1996, generally provides that before a rule may take effect, the agency promulgating the rule must submit a rule report, which includes a copy of the rule, to each House of the Congress and to the Comptroller General of the United States. EPA will submit a report containing this rule and other required information to the U.S. Senate, the U.S. House of Representatives, and the Comptroller General of the United States prior to publication of the rule in the **Federal Register**. A major rule cannot take effect until 60 days after it is published in the **Federal Register**. This action is not a ''major rule'' as defined by U.S.C. 804(2). This rule will be effective June 5, 2000.

List of Subjects

40 CFR Part 9

Reporting and recordkeeping requirements.

40 CFR Part 141

Environmental protection, Chemicals, Indians-lands, Intergovernmental relations, Radiation protection, Reporting and record-keeping requirements, Water supply.

40 CFR Part 142

Environmental protection, Administrative practice and procedure, Chemicals, Indians-lands, Radiation protection, Reporting and record-keeping requirements, Water supply.

40 CFR Part 143

Chemicals, Indians-lands, Water supply.

Dated: April 7, 2000.

Carol M. Browner,

Administrator.

For the reasons set out in the preamble, 40 CFR Parts 9, 141, 142, and 143 are amended as follows:

PART 9—[AMENDED]

1. The authority citation for part 9 continues to read as follows:

Authority: 7 U.S.C. 135 *et seq.*, 136–136y; 15 U.S.C. 2001, 2003, 2005, 2006, 2601–2671; 21 U.S.C. 331j, 345a, 348; 31 U.S.C. 9701; 33 U.S.C. 1251 *et seq.*, 1311, 1313d, 1314, 1318, 1321, 1326 1330, 1324, 1344, 1345 (d) and (e), 1361; E.O. 11735, 38 FR 21243, 3 CFR, 1971–1975 Comp. p. 973; 42 U.S.C. 241, 242b, 243, 246, 300f, 300g, 300g–1, 300g–2, 300g–3, 300g–4, 300g–5, 300g–6, 300j–1, 300j–2, 300j–3, 300j–4, 300j–9, 1857 *et seq.*, 69016992k, 7401–7671q, 7542, 9501–9657, 11023, 11048.

2. In § 9.1 the table is amended by removing the entries ''§ 141.31–141.32'', ''§ 141.33–141.35'', ''§ 142.10–142.15'', and ''142.16'' and adding in numerical order new entires under the indicated heading to read as follows:

§ 9.1 OMB approvals under the Paperwork Reduction Act.

* * * * *

40 CFR citation	OMB Control No.
* * * * *	
National Primary Drinking Water Regulaitons	
* * * * *	
141.31(a)–(c)	2040–0090
141.31(d)	2040–0209
141.31(e)	2040–0090
141.32(a)–(g)	2040–0090
141.33(a)–(d)	2040–0090
141.33(e)	2040–0209
* * * * *	
141.201–141.210	2040–0209

40 CFR citation	OMB Control No.
* * * * *	
National Primary Drinking Water Regulations Implementation	
* * * * *	
142.10–142.13	2040–0090
142.14(a)–(e)	2040–0090
142.14(f)	2040–0209
142.14(g)	2040–0090
142.15(a)	2040–0090, 2040–0209
142.15(b)–(d)	2040–0090
142.16(a)	2040–0209
142.16(b)–(e)	2040–0090

* * * * *

PART 141—NATIONAL PRIMARY DRINKING WATER REGULATIONS

1. The authority citation for Part 141 continues to read as follows:

Authority: 42 U.S.C. 300f, 300g–1, 300g–2, 300g–3, 300g–4, 300g–5, 300g–6, 300j–4, 300j–9, and 300j–11.

2. Section 141.11 is amended by revising paragraph (d)(2) to read as follows:

§ 141.11 Maximum contaminant levels for inorganic chemicals

* * * * *

(d) * * *

(2) The non-community water system is meeting the public notification requirements under § 141.209, including continuous posting of the fact that nitrate levels exceed 10 mg/l and the potential health effects of exposure; and

* * * * *

3. Sections 141.21(g)(1) and (g)(2), 141.22(b), 141.23(n) and (o), 141.26(a)(4), (b)(5), 141.30(d), 141.63(b), 141.133(b)(1)(i), (b)(2), (b)(3) and (c)(1)(i) are amended by revising ''§ 141.32'' to read ''subpart Q'' and in § 141.133(c)(2)(i) by revising ''§ 141.32(a)(1)(iii)(E) (which appears twice) to ''subpart Q'' and in § 141.33(c)(2)(ii) by revising ''§ 141.133(e)(78)'' to read ''subpart Q.''

§§ 141.21, 141.22, 141.23, 141.26, 141.30, 141.63, and 141.133, [Amended]

4. Section 141.23 is amended by removing paragraph (i)(4) and revising paragraph (f)(2), to read as follows:

§ 141.23 Inorganic chemical sampling and analytical requirements.

* * * * *

(f) * * *

(2) Where nitrate or nitrite sampling results indicate an exceedance of the maximum contaminant level, the system shall take a confirmation sample within 24 hours of the system's receipt of notification of the analytical results of the first sample. Systems unable to comply with the 24-hour sampling requirement must immediately notify persons served by the public water system in accordance with § 141.202 and meet other Tier 1 public notification requirements under Subpart Q of this part. Systems exercising this option must take and analyze a confirmation sample within two weeks of notification of the analytical results of the first sample.

* * * * *

§ 141.24 [Amended]

5. Part 141 is amended by removing §§ 141.24(f)(15)(iii) and 141.24(h)(11)(iii).

6. In Part 141, the heading for Subpart D is revised to read as follows:

Subpart D—Reporting and Record Keeping

7. Section 141.31 is amended by revising paragraph (d), to read as follows:

§ 141.31 Reporting requirements.

* * * * *

(d) The public water system, within 10 days of completing the public notification requirements under Subpart Q of this part for the initial public notice and any repeat notices, must submit to the primacy agency a certification that it has fully complied with the public notification regulations. The public water system must include with this certification a representative copy of each type of notice distributed, published, posted, and made available to the persons served by the system and to the media.

* * * * *

8. Section 141.32 is amended by revising the introductory paragraph, to read as follows:

§ 141.32 Public notification.

The requirements in this section apply until the requirements of Subpart Q of this part are applicable. Public water systems where EPA directly implements the public water system supervision program must comply with the requirements in Subpart Q of this part on October 31, 2000. All other public water systems must comply with the requirements in Subpart Q of this part on May 6, 2002 or on the date the State-adopted rule becomes effective, whichever comes first.

* * * * *

9. Section 141.33 is amended by adding paragraph (e), to read as follows:

§ 141.33 Record maintenance.

* * * * *

(e) Copies of public notices issued pursuant to Subpart Q of this part and certifications made to the primacy agency pursuant to § 141.31 must be kept for three years after issuance.

10. Section 141.75 is amended by revising paragraphs (a)(5)(ii) and (b)(3)(ii) to read as follows:

§ 141.75 Reporting and record keeping requirements.

(a) * * *

(5) * * *

(ii) If at any time the turbidity exceeds 5 NTU, the system must consult with the primacy agency as soon as practical, but no later than 24 hours after the exceedance is known, in accordance with the public notification requirements under § 141.203(b)(3).

* * * * *

(b) * * *

(3) * * *

(ii) If at any time the turbidity exceeds 5 NTU, the system must consult with the primacy agency as soon as practical, but no later than 24 hours after the exceedance is known, in accordance with the public notification requirements under § 141.203(b)(3).

* * * * *

11. Section 141.153 is amended by:

a. Revising (c)(3) introductory text.

b. Adding paragraphs (c)(3)(iii) and (c)(3)(iv).

c. Revising paragraphs (d)(1)(i), (d)(4)(ix) and (d)(6).

d. Revising paragraphs (f)(3) and (f)(4).

The additions and revisions are as follows:

§ 141.153 Content of the reports.

* * * * *

(c) * * *

(3) A report that contains data on contaminants that EPA regulates using any of the following terms must include the applicable definitions:

* * * * *

(iii) *Maximum residual disinfectant level goal or MRDLG:* The level of a drinking water disinfectant below which there is no known or expected risk to health. MRDLGs do not reflect the benefits of the use of disinfectants to control microbial contaminants.

(iv) *Maximum residual disinfectant level or MRDL:* The highest level of a disinfectant allowed in drinking water. There is convincing evidence that addition of a disinfectant is necessary for control of microbial contaminants.

(d) * * *

(1) * * *

(i) Contaminants subject to a MCL, action level, maximum residual

disinfectant level, or treatment technique (regulated contaminants).

* * * * *

(4) * * *

(ix) The likely source(s) of detected contaminants to the best of the operator's knowledge. Specific information regarding contaminants may be available in sanitary surveys and source water assessments, and should be used when available to the operator. If the operator lacks specific information on the likely source, the report must include one or more of the typical sources for that contaminant listed in appendix A to this subpart that is most applicable to the system.

* * * * *

(6) The table(s) must clearly identify any data indicating violations of MCLs, MRDLs, or treatment techniques, and the report must contain a clear and readily understandable explanation of the violation including: the length of the violation, the potential adverse health effects, and actions taken by the system to address the violation. To describe the potential health effects, the system must use the relevant language of appendix A to this subpart.

* * * * *

(f) * * *

(3) Lead and copper control requirements prescribed by subpart I of this part. For systems that fail to take one or more actions prescribed by §§ 141.80(d), 141.81, 141.82, 141.83 or 141.84, the report must include the applicable language of appendix A to this subpart for lead, copper, or both.

(4) Treatment techniques for Acrylamide and Epichlorohydrin prescribed by subpart K of this part. For systems that violate the requirements of subpart K of this part, the report must include the relevant language from appendix A to this subpart.

* * * * *

12. Section 141.154 is amended by revising paragraph (e) to read as follows:

§ 141.154 Required additional health information.

* * * * *

(e) Community water systems that detect TTHM above 0.080 mg/l, but below the MCL in § 141.12, as an annual average, monitored and calculated under the provisions of § 141.30, must include health effects language for TTHMs prescribed by appendix A.

13. Section 141.155 is amended by revising paragraph (h) to read as follows:

§ 141.155 Report delivery and record keeping.

* * * * *

(h) Any system subject to this subpart must retain copies of its Consumer Confidence Report for no less than 3 years.

14. Appendix A to Subpart O is revised to read as follows:

APPENDIX A TO SUBPART O.—REGULATED CONTAMINANTS

Contaminant (units)	Traditional MCL in mg/L	To convert for CCR, multiply by	MCL in CCR units	MCLG	Major sources in drinking water	Health effects language
Microbiological contaminants:						
Total Coliform Bacteria	MCL: (systems that collect ≥40 samples/month) 5% of monthly samples are positive; (systems that collect <40 samples/month) 1 positive monthly sample.		MCL: (systems that collect ≥40 samples/month) 5% of monthly samples are positive; (systems that collect <40 samples/month) 1 positive monthly sample.	0	Naturally present in the environment.	Coliforms are bacteria that are naturally present in the environment and are used as an indicator that other, potentially-harmful, bacteria may be present. Coliforms were found in more samples than allowed and this was a warning of potential problems.
Fecal coliform and E. coli	0		0	0	Human and animal fecal waste	Fecal coliforms and E. coli are bacteria whose presence indicates that the water may be contaminated with human or animal wastes. Microbes in these wastes can cause short-term effects, such as diarrhea, cramps, nausea, headaches, or other symptoms. They may pose a special health risk for infants, young children, some of the elderly, and people with severely-compromised immune systems.
Total organic carbon (ppm)	TT		TT	N/A	Naturally present in the environment.	Total organic carbon (TOC) has no health effects. However, total organic carbon provides a medium for the formation of disinfection by products. These byproducts include trihalomethanes (THMs) and haloacetic acids (HAAs). Drinking water containing these byproducts in excess of the MCL may lead to adverse health effects, liver or kidney problems, or nervous system effects, and may lead to an increased risk of getting cancer.
Turbidity (NTU)	TT		TT	N/A	Soil runoff	Turbidity has no health effects. However, turbidity can interfere with disinfection and provide a medium for microbial growth. Turbidity may indicate the presence of disease-causing organisms. These organisms include bacteria, viruses, and parasites that can cause symptoms such as nausea, cramps, diarrhea and associated headaches.

Radioactive contaminants:						
Beta/photon emitters (mrem/yr)	4 mrem/yr		4	N/A	Decay of natural and man-made deposits.	Certain minerals are radioactive and may emit forms of radiation known as photons and beta radiation. Some people who drink water containing beta and photon emitters in excess of the MCL over many years may have an increased risk of getting cancer.
Alpha emitters (pCi/l)	15 pCi/l		15	N/A	Erosion of natural deposits	Certain minerals are radioactive and may emit a form of radiation known as alpha radiation. Some people who drink water containing alpha emitters in excess of the MCL over many years may have an increased risk of getting cancer.
Combined radium (pCi/l)	5 pCi/l	—	5	N/A	Erosion of natural deposits	Some people who drink water containing radium 226 or 228 in excess of the MCL over many years may have an increased risk of getting cancer
Inorganic contaminants:						
Antimony (ppb)	.006	1000	6	6	Discharge from petroleum refineries; fire retardants; ceramics; electronics; solder.	Some people who drink water containing antimony well in excess of the MCL over many years could experience increases in blood cholesterol and decreases in blood sugar.
Arsenic (ppb)	.05	1000	50	N/A	Erosion of natural deposits; Runoff from orchards; Runoff from glass and electronics production wastes.	Some people who drink water containing arsenic in excess of the MCL over many years could experience skin damage or problems with their circulatory system, and may have an increased risk of getting cancer.
Asbestos (MFL)	7 MFL		7	7	Decay of asbestos cement water mains; Erosion of natural deposits.	Some people who drink water containing asbestos in excess of the MCL over many years may have an increased risk of developing benign intestinal polyps.
Barium (ppm)	2		2	2	Discharge of drilling wastes; Discharge from metal refineries; Erosion of natural deposits.	Some people who drink water containing barium in excess of the MCL over many years could experience an increase in their blood pressure.
Beryllium (ppb)	.004	1000	4	4	Discharge from metal refineries and coal-burning factories; Discharge from electrical, aerospace, and defense industries.	Some people who drink water containing beryllium well in excess of the MCL over many years could develop intestinal lesions
Cadmium (ppb)	.005	1000	5	5	Corrosion of galvanized pipes; Erosion of natural deposits; Discharge from metal refineries; Runoff from waste batteries and paints.	Some people who drink water containing cadmium in excess of the MCL over many years could experience kidney damage.

APPENDIX A TO SUBPART O.—REGULATED CONTAMINANTS—Continued

Contaminant (units)	Traditional MCL in mg/L	To convert for CCR, multiply by	MCL in CCR units	MCLG	Major sources in drinking water	Health effects language
Chromium (ppb)	.1	1000	100	100	Discharge from steel and pulp mills; Erosion of natural deposits.	Some people who use water containing chromium well in excess of the MCL over many years could experience allergic dermatitis.
Copper (ppm)	AL=1.3		AL=1.3	1.3	Corrosion of household plumbing systems; Erosion of natural deposits; Leaching from wood preservatives.	Copper is an essential nutrient, but some people who drink water containing copper in excess of the action level over a relatively short amount of time could experience gastrointestinal distress. Some people who drink water containing copper in excess of the action level over many years could suffer liver or kidney damage. People with Wilson's Disease should consult their personal doctor.
Cyanide (ppb)	.2	1000	200	200	Discharge from steel/metal factories; Discharge from plastic and fertilizer factories.	Some people who drink water containing cyanide well in excess of the MCL over many years could experience nerve damage or problems with their thyroid.
Fluoride (ppm)	4		4	4	Erosion of natural deposits; Water additive which promotes strong teeth; Discharge from fertilizer and aluminum factories.	Some people who drink water containing fluoride in excess of the MCL over many years could get bone disease, including pain and tenderness of the bones. Fluoride in drinking water at half the MCL or more may cause mottling of children's teeth, usually in children less than nine years old. Mottling, also known as dental fluorosis, may include brown staining and/or pitting of the teeth, and occurs only in developing teeth before they erupt from the gums.
Lead (ppb)	AL=.015	1000	AL=15	0	Corrosion of household plumbing systems; Erosion of natural deposits.	Infants and children who drink water containing lead in excess of the action level could experience delays in their physical or mental development. Children could show slight deficits in attention span and learning abilities. Adults who drink this water over many years could develop kidney problems or high blood pressure.

Mercury [inorganic] (ppb)	.002	1000	2	2	Erosion of natural deposits; Discharge from refineries and factories; Runoff from landfills; Runoff from cropland.	Some people who drink water containing inorganic mercury well in excess of the MCL over many years could experience kidney damage.
Nitrate (ppm)	10		10	10	Runoff from fertilizer use; Leaching from septic tanks, sew age; Erosion of natural deposits.	Infants below the age of six months who drink water containing nitrate in excess of the MCL could become seriously ill and, if untreated, may die. Symptoms include shortness of breath and blue baby syndrome.
Nitrite (ppm)	1		1	1	Runoff from fertilizer use; Leaching from septic tanks, sew age; Erosion of natural deposits.	Infants below the age of six months who drink water containing nitrite in excess of the MCL could become seriously ill and, if untreated, may die. Symptoms include shortness of breath and blue baby syndrome.
Selenium (ppb)	.05	1000	50	50	Discharge from petroleum and metal refineries; Erosion of natural deposits; Discharge from mines.	Selenium is an essential nutrient. However, some people who drink water containing selenium in excess of the MCL over many years could experience hair or fingernail losses, numbness in fingers or toes, or problems with their circulation.
Thallium (ppb)	.002	1000	2	0.5	Leaching from ore-processing sites; Discharge from electronics, glass, and drug factories.	Some people who drink water containing thallium in excess of the MCL over many years could experience hair loss, changes in their blood, or problems with their kidneys, intestines, or liver.
Synthetic organic contaminants including pesticides and herbicides:						
2,4-D (ppb)	.07	1000	70	70	Runoff from herbicide used on row crops.	Some people who drink water containing the weed killer 2,4-D well in excess of the MCL over many years could experience problems with their kidneys, liver, or adrenal glands.
2,4,5-TP [Silvex](ppb)	.05	1000	50	50	Residue of banned herbicide	Some people who drink water containing silvex in excess of the MCL over many years could experience liver problems.
Acrylamide	TT		TT	0	Added to water during sewage/wastewater treatment.	Some people who drink water containing high levels of acrylamide over a long period of time could have problems with their nervous system or blood, and may have an increased risk of getting cancer.

APPENDIX A TO SUBPART O.—REGULATED CONTAMINANTS—Continued

Contaminant (units)	Traditional MCL in mg/L	To convert for CCR, multiply by	MCL in CCR units	MCLG	Major sources in drinking water	Health effects language
Alachlor (ppb)	.002	1000	2	0	Runoff from herbicide used on row crops.	Some people who drink water containing alachlor in excess of the MCL over many years could have problems with their eyes, liver, kidneys, or spleen, or experience anemia, and may have an increased risk of getting cancer.
Atrazine (ppb)	.003	1000	3	3	Runoff from herbicide used on row crops.	Some people who drink water containing atrazine well in excess of the MCL over many years could experience problems with their cardiovascular system or reproductive difficulties.
Benzo(a)pyrene [PAH] (nanograms/l).	.0002	1,000,000	200	0	Leaching from linings of water storage tanks and distribution lines.	Some people who drink water containing benzo(a)pyrene in excess of the MCL over many years may experience reproductive difficulties and may have an increased risk of getting cancer.
Carbofuran (ppb)	.04	1000	40	40	Leaching of soil fumigant used on rice and alfalfa.	Some people who drink water containing carbofuran in excess of the MCL over many years could experience problems with their blood, or nervous or reproductive systems.
Chlordane (ppb)	.002	1000	2	0	Residue of banned termiticide	Some people who drink water containing chlordane in excess of the MCL over many years could experience problems with their liver or nervous system, and may have an increased risk of getting cancer.
Dalapon (ppb)	.2	1000	200	200	Runoff from herbicide used on rights of way.	Some people who drink water containing dalapon well in excess of the MCL over many years could experience minor kidney changes.
Di(2-ethylhexyl) adipate (ppb)	.4	1000	400	400	Discharge from chemical factories	Some people who drink water containing di (2-ethylhexyl) adipate well in excess of the MCL over many years could experience general toxic effects or reproductive difficulties.
Di(2-ethylhexyl) phthalate (ppb)	.006	1000	6	0	Discharge from rubber and chemical factories.	Some people who drink water containing di (2-ethylhexyl) phthalate in excess of the MCL over many years may have problems with their liver, or experience reproductive difficulties, and may have an increased risk of getting cancer.

Dibromochloropropane (ppt)	.0002	1,000,000	200	0	Runoff/leaching from soil fumigant used on soybeans, cotton, pineapples, and orchards.	Some people who drink water containing DBCP in excess of the MCL over many years could experience reproductive problems and may have an increased risk of getting cancer.
Dinoseb (ppb)	.007	1000	7	7	Runoff from herbicide used on soybeans and vegetables.	Some people who drink water containing dinoseb well in excess of the MCL over many years could experience reproductive difficulties.
Diquat (ppb)	.02	1000	20	20	Runoff from herbicide use	Some people who drink water containing diquat in excess of the MCL over many years could get cataracts.
Dioxin [2,3,7,8-TCDD] (ppq)	.00000003	1,000,000, 000	30	0	Emissions from waste incineration and other combustion; Discharge from chemical factories.	Some people who drink water containing dioxin in excess of the MCL over many years could experience reproductive difficulties and may have an increased risk of getting cancer.
Endothall (ppb)	.1	1000	100	100	Runoff from herbicide use	Some people who drink water containing endothall in excess of the MCL over many years could experience problems with their stomach or intestines.
Endrin (ppb)	.002	1000	2	2	Residue of banned insecticide	Some people who drink water containing endrin in excess of the MCL over many years could experience liver problems.
Epichlorohydrin	TT		TT	0	Discharge from industrial chemical factories; An impurity of some water treatment chemicals.	Some people who drink water containing high levels of epichlorohydrin over a long period of time could experience stomach problems, and may have an increased risk of getting cancer.
Ethylene dibromide (ppt)	.00005	1,000,000	50	0	Discharge from petroleum refineries	Some people who drink water containing ethylene dibromide in excess of the MCL over many years could experience problems with their liver, stomach, reproductive system, or kidneys, and may have an increased risk of getting cancer.
Glyphosate (ppb)	.7	1000	700	700	Runoff from herbicide use	Some people who drink water containing glyphosate in excess of the MCL over many years could experience problems with their kidneys or reproductive difficulties.
Heptachlor (ppt)	.0004	1,000,000	400	0	Residue of banned pesticide	Some people who drink water containing heptachlor in excess of the MCL over many years could experience liver damage and may have an increased risk of getting cancer.

APPENDIX A TO SUBPART O.—REGULATED CONTAMINANTS—Continued

Contaminant (units)	Traditional MCL in mg/L	To convert for CCR, multiply by	MCL in CCR units	MCLG	Major sources in drinking water	Health effects language
Heptachlor epoxide (ppt)	.0002	1,000,000	200	0	Breakdown of heptachlor	Some people who drink water containing heptachlor epoxide in excess of the MCL over many years could experience liver damage, and may have an increased risk of getting cancer.
Hexachlorobenzene (ppb)	.001	1000	1	0	Discharge from metal refineries and agricultural chemical factories.	Some people who drink water containing hexachlorobenzene in excess of the MCL over many years could experience problems with their liver or kidneys, or adverse reproductive effects, and may have an increased risk of getting cancer.
Hexachlorocyclopentadiene (ppb).	.05	1000	50	50	Discharge from chemical factories	Some people who drink water containing hexachlorocyclopentadiene well in excess of the MCL over many years could experience problems with their kidneys or stomach.
Lindane (ppt)	.0002	1,000,000	200	200	Runoff/leaching from insecticide used on cattle, lumber, gardens.	Some people who drink water containing lindane in excess of the MCL over many years could experience problems with their kidneys or liver.
Methoxychlor (ppb)	.04	1000	40	40	Runoff/leaching from insecticide used on fruits, vegetables, alfalfa, livestock.	Some people who drink water containing methoxychlor in excess of the MCL over many years could experience reproductive difficulties.
Oxamyl [Vydate] (ppb)	.2	1000	200	200	Runoff/leaching from insecticide used on apples, potatoes and tomatoes.	Some people who drink water containing oxamyl in excess of the MCL over many years could experience slight nervous system effects.
PCBs [Polychlorinated biphenyls] (ppt).	.0005	1,000,000	500	0	Runoff from landfills; Discharge of waste chemicals.	Some people who drink water containing PCBs in excess of the MCL over many years could experience changes in their skin, problems with their thymus gland, immune deficiencies, or reproductive or nervous system difficulties, and may have an increased risk of getting cancer.
Pentachlorophenol (ppb)	.001	1000	1	0	Discharge from wood preserving factories.	Some people who drink water containing pentachlorophenol in excess of the MCL over many years could experience problems with their liver or kidneys, and may have an increased risk of getting cancer.

Picloram (ppb)	.5	1000	500	500	Herbicide runoff	Some people who drink water containing picloram in excess of the MCL over many years could experience problems with their liver.
Simazine (ppb)	.004	1000	4	4	Herbicide runoff	Some people who drink water containing simazine in excess of the MCL over many years could experience problems with their blood.
Toxaphene (ppb)	.003	1000	3	0	Runoff/leaching from insecticide used on cotton and cattle.	Some people who drink water containing toxaphene in excess of the MCL over many years could have problems with their kidneys, liver, or thyroid, and may have an increased risk of getting cancer.
Volatile organic contaminants:						
Benzene (ppb)	.005	1000	5	0	Discharge from factories; Leaching from gas storage tanks and landfills.	Some people who drink water containing benzene in excess of the MCL over many years could experience anemia or a decrease in blood platelets, and may have an increased risk of getting cancer.
Bromate (ppb)	.010	1000	10	0	By-product of drinking water chlorination.	Some people who drink water containing bromate in excess of the MCL over many years may have an increased risk of getting cancer.
Carbon tetrachloride (ppb)	.005	1000	5	0	Discharge from chemical plants and other industrial activities.	Some people who drink water containing carbon tetrachloride in excess of the MCL over many years could experience problems with their liver and may have an increased risk of getting cancer.
Chloramines (ppm)	MRDL = 4		MRDL = 4	MRDLG = 4	Water additive used to control microbes.	Some people who use water containing chloramines well in excess of the MRDL could experience irritating effects to their eyes and nose. Some people who drink water containing chloramines well in excess of the MRDL could experience stomach discomfort or anemia.
Chlorine (ppm)	MRDL = 4		MRDL = 4	MRDLG = 4	Water additive used to control microbes.	Some people who use water containing chlorine well in excess of the MRDL could experience irritating effects to their eyes and nose. Some people who drink water containing chlorine well in excess of the MRDL could experience stomach discomfort.

APPENDIX A TO SUBPART O.—REGULATED CONTAMINANTS—Continued

Contaminant (units)	Traditional MCL in mg/L	To convert for CCR, multiply by	MCL in CCR units	MCLG	Major sources in drinking water	Health effects language
Chlorite (ppm)	1		1	0.8	By-product of drinking water chlorination.	Some infants and young children who drink water containing chlorite in excess of the MCL could experience nervous system effects. Similar effects may occur in fetuses of pregnant women who drink water containing chlorite in excess of the MCL. Some people may experience anemia.
Chloride dioxide (ppb)	MRDL = .8	1000	MRDL = 800	MRDLG = 800.	Water additive used to control microbes.	Some infants and young children who drink water containing chlorine dioxide in excess of the MRDL could experience nervous system effects. Similar effects may occur in fetuses of pregnant women who drink water containing chlorine dioxide in excess of the MRDL. Some people may experience anemia.
Chlorobenzene (ppb)	.1	1000	100	100	Discharge from chemical and agricultural chemical factories.	Some people who drink water containing chlorobenzene in excess of the MCL over many years could experience problems with their liver or kidneys.
o-Dichlorobenzene (ppb)	.6	1000	600	600	Discharge from industrial chemical factories.	Some people who drink water containing o-dichlorobenzene well in excess of the MCL over many years could experience problems with their liver, kidneys, or circulatory systems.
p-Dichlorobenzene (ppb)	.075	1000	75	75	Discharge from industrial chemical factories.	Some people who drink water containing p-dichlorobenzene in excess of the MCL over many years could experience anemia, damage to their liver, kidneys, or spleen, or changes in their blood.
1,2-Dichloroethane (ppb)	.005	1000	5	0	Discharge from industrial chemical factories.	Some people who drink water containing 1,2-dichloroethane in excess of the MCL over many years may have an increased risk of getting cancer.
1,1-Dichloroethylene (ppb)	.007	1000	7	7	Discharge from industrial chemical factories.	Some people who drink water containing 1,1-dichloroethylene in excess of the MCL over many years could experience problems with their liver.
cis-1,2-Dichloroethylene (ppb)	.07	1000	70	70	Discharge from industrial chemical factories.	Some people who drink water containing cis-1,2-dichloroethylene in excess of the MCL over many years could experience problems with their liver.

trans-1,2-Dichloroethylene (ppb).	.1	1000	100	100	Discharge from industrial chemical factories.	Some people who drink water containing trans-1,2-dichloroethylene well in excess of the MCL over many years could experience problems with their liver.
Dichloromethane (ppb)	.005	1000	5	0	Discharge from pharmaceutical and chemical factories.	Some people who drink water containing dichloromethane in excess of the MCL over many years could have liver problems and may have an increased risk of getting cancer.
1,2-Dichloropropane (ppb)	.005	1000	5	0	Discharge from industrial chemical factories.	Some people who drink water containing 1,2-dichloropropane in excess of the MCL over many years may have an increased risk of getting cancer.
Ethylbenzene (ppb)	.7	1000	700	700	Discharge from petroleum refineries	Some people who drink water containing ethylbenzene well in excess of the MCL over many years could experience problems with their liver or kidneys.
Haloacetic Acids (HAA) (ppb)	.060	1000	60	N/A	By-product of drinking water disinfection.	Some people who drink water containing haloacetic acids in excess of the MCL over many years may have an increased risk of getting cancer.
Styrene (ppb)	.1	1000	100	100	Discharge from rubber and plastic factories; Leaching from landfills.	Some people who drink water containing styrene well in excess of the MCL over many years could have problems with their liver, kidneys, or circulatory system.
Tetrachloroethylene (ppb)	.005	1000	5	0	Discharge from factories and dry cleaners.	Some people who drink water containing tetrachloroethylene in excess of the MCL over many years could have problems with their liver, and may have an increased risk of getting cancer.
1,2,4-Trichlorobenzene (ppb)	.07	1000	70	70	Discharge from textile-finishing factories.	Some people who drink water containing 1,2,4-trichlorobenzene well in excess of the MCL over many years could experience changes in their adrenal glands.
1,1,1-Trichloroethane (ppb)	.2	1000	200	200	Discharge from metal degreasing sites and other factories.	Some people who drink water containing 1,1,1-trichloroethane in excess of the MCL over many years could experience problems with their liver, nervous system, or circulatory system.
1,1,2-Trichloroethane (ppb)	.005	1000	5	3	Discharge from industrial chemical factories.	Some people who drink water containing 1,1,2-trichloroethane well in excess of the MCL over many years could have problems with their liver, kidneys, or immune systems.

APPENDIX A TO SUBPART O.—REGULATED CONTAMINANTS—Continued

Contaminant (units)	Traditional MCL in mg/L	To convert for CCR, multiply by	MCL in CCR units	MCLG	Major sources in drinking water	Health effects language
Trichloroethylene (ppb)	.005	1000	5	0	Discharge from metal degreasing sites and other factories.	Some people who drink water containing trichloroethylene in excess of the MCL over many years could experience problems with their liver and may have an increased risk of getting cancer.
TTHMs [Total trihalomethanes] (ppb).	0.10/.080	1000	100/80	N/A	By-product of drinking water chlorination.	Some people who drink water containing trihalomethanes in excess of the MCL over many years may experience problems with their liver, kidneys, or central nervous systems, and may have an increased risk of getting cancer.
Toluene (ppm)	1		1	1	Discharge from petroleum factories	Some people who drink water containing toluene well in excess of the MCL over many years could have problems with their nervous system, kidneys, or liver.
Vinyl Chloride (ppb)	.002	1000	2	0	Leaching from PVC piping; Discharge from plastics factories.	Some people who drink water containing vinyl chloride in excess of the MCL over many years may have an increased risk of getting cancer.
Xylenes (ppm)	10		10	10	Discharge from petroleum factories; Discharge from chemical factories.	Some people who drink water containing xylenes in excess of the MCL over many years could experience damage to their nervous system.

Key:
AL=Action Level
MCL=Maximum Contaminant Level
MCLG=Maximum Contaminant Level Goal
MFL=million fibers per liter
MRDL=Maximum Residual Disinfectant Level
MRDLG=Maximum Residual Disinfectant Level Goal
mrem/year=millirems per year (a measure of radiation absorbed by the body)
N/A=Not Applicable
NTU=Nephelometric Turbidity Units (a measure of water clarity)
pCi/l=picocuries per liter (a measure of radioactivity)
ppm=parts per million, or milligrams per liter (mg/l)
ppb=parts per billion, or micrograms per liter (µg/l)
ppt=parts per trillion, or nanograms per liter
ppq=parts per quadrillion, or picograms per liter
TT=Treatment Technique

Appendices B and C to Subpart O [Removed]

15. Appendices B and C to Subpart O are removed.

16. Section 141.175 is amended by revising paragraphs (c)(1) and (c)(2) to read as follows:

§ 141.175 Reporting and record keeping requirements.

* * * * *

(c) * * *

(1) If at any time the turbidity exceeds 1 NTU in representative samples of filtered water in a system using conventional filtration treatment or direct filtration, the system must consult with the primacy agency as soon as practical, but no later than 24 hours after the exceedance is known, in accordance with the public notification requirements under § 141.203(b)(3).

(2) If at any time the turbidity in representative samples of filtered water exceed the maximum level set by the State under § 142.173(b) for filtration technologies other than conventional filtration treatment, direct filtration, slow sand filtration, or diatomaceous earth filtration, the system must consult with the primacy agency as soon as practical, but no later than 24 hours after the exceedance is known, in accordance with the public notification requirements under § 141.203(b)(3).

17. Part 141 is amended by adding Subpart Q, to read as follows:

Subpart Q—Public Notification of Drinking Water Violations

Sec.

141.201 General public notification requirements.
141.202 *Tier 1 Public Notice*—Form, manner, and frequency of notice.
141.203 *Tier 2 Public Notice*—Form, manner, and frequency of notice.
141.204 *Tier 3 Public Notice*—Form, manner, and frequency of notice.
141.205 Content of the public notice.
141.206 Notice to new billing units or new customers.
141.207 Special notice of the availability of unregulated contaminant monitoring results.
141.208 Special notice for exceedance of the SMCL for fluoride.
141.209 Special notice for nitrate exceedances above MCL by non-community water systems (NCWS), where granted permission by the primacy agency under § 141.11(d).
141.210 Notice by primacy agency on behalf of the public water system.
Appendix A to Subpart Q of Part 141—NPDWR Violations and Situations Requiring Public Notice
Appendix B to Subpart Q of Part 141—Standard Health Effects Language for Public Notification
Appendix C to Subpart Q of Part 141—List of Acronyms Used in Public Notification Regulation

Subpart Q—Public Notification of Drinking Water Violations

§ 141.201 General public notification requirements.

Public water systems in States with primacy for the public water system supervision (PWSS) program must comply with the requirements in this subpart no later than May 6, 2002 or on the date the State-adopted rule becomes effective, whichever comes first. Public water systems in jurisdictions where EPA directly implements the PWSS program must comply with the requirements in this subpart on October 31, 2000. Prior to these dates, public water systems must continue to comply with the public notice requirements in § 141.32 of this part. The term ''primacy agency'' is used in this subpart to refer to either EPA or the State or the Tribe in cases where EPA, the State, or the Tribe exercises primary enforcement responsibility for this subpart.

(a) *Who must give public notice?* Each owner or operator of a public water system (community water systems, non-transient non-community water systems, and transient non-community water systems) must give notice for all violations of national primary drinking water regulations (NPDWR) and for other situations, as listed in Table 1. The term ''NPDWR violations'' is used in this subpart to include violations of the maximum contaminant level (MCL), maximum residual disinfection level (MRDL), treatment technique (TT), monitoring requirements, and testing procedures in this part 141. Appendix A to this subpart identifies the tier assignment for each specific violation or situation requiring a public notice.

TABLE 1 TO § 141.201.—VIOLATION CATEGORIES AND OTHER SITUATIONS REQUIRING A PUBLIC NOTICE

(1) NPDWR violations:
- (i) Failure to comply with an applicable maximum contaminant level (MCL) or maximum residual disinfectant level (MRDL).
- (ii) Failure to comply with a prescribed treatment technique (TT).
- (iii) Failure to perform water quality monitoring, as required by the drinking water regulations.
- (iv) Failure to comply with testing procedures as prescribed by a drinking water regulation.

(2) Variance and exemptions under sections 1415 and 1416 of SDWA:
- (i) Operation under a variance or an exemption.
- (ii) Failure to comply with the requirements of any schedule that has been set under a variance or exemption.

(3) Special public notices:
- (i) Occurrence of a waterborne disease outbreak or other waterborne emergency.
- (ii) Exceedance of the nitrate MCL by non-community water systems (NCWS), where granted permission by the primacy agency under 141.11(d) of this part.
- (iii) Exceedance of the secondary maximum contaminant level (SMCL) for fluoride.
- (iv) Availability of unregulated contaminant monitoring data.
- (v) Other violations and situations determined by the primacy agency to require a public notice under this subpart, not already listed in Appendix A.

(b) What type of public notice is required for each violation or situation? Public notice requirements are divided into three tiers, to take into account the seriousness of the violation or situation and of any potential adverse health effects that may be involved. The public notice requirements for each violation or situation listed in Table 1 of this section are determined by the tier to which it is assigned. Table 2 of this section provides the definition of each tier. Appendix A of this part identifies the tier assignment for each specific violation or situation.

TABLE 2 TO § 141.201.—DEFINITION OF PUBLIC NOTICE TIERS

(1) *Tier 1 public notice*—required for NPDWR violations and situations with significant potential to have serious adverse effects on human health as a result of short-term exposure.
(2) *Tier 2 public notice*—required for all other NPDWR violations and situations with potential to have serious adverse effects on human health.
(3) *Tier 3 public notice*—required for all other NPDWR violations and situations not included in Tier 1 and Tier 2.

(c) Who must be notified?

(1) Each public water system must provide public notice to persons served by the water system, in accordance with this subpart. Public water systems that sell or otherwise provide drinking water to other public water systems (i.e., to consecutive systems) are required to give public notice to the owner or operator of the consecutive system; the consecutive system is responsible for

providing public notice to the persons it serves.

(2) If a public water system has a violation in a portion of the distribution system that is physically or hydraulically isolated from other parts of the distribution system, the primacy agency may allow the system to limit distribution of the public notice to only persons served by that portion of the system which is out of compliance. Permission by the primacy agency for limiting distribution of the notice must be granted in writing.

(3) A copy of the notice must also be sent to the primacy agency, in accordance with the requirements under § 141.31(d).

§ 141.202 Tier 1 Public Notice—Form, manner, and frequency of notice.

(a) Which violations or situations require a Tier 1 public notice? Table 1 of this section lists the violation categories and other situations requiring a Tier 1 public notice. Appendix A to this subpart identifies the tier assignment for each specific violation or situation.

TABLE 1 TO § 141.202.—VIOLATION CATEGORIES AND OTHER SITUATIONS REQUIRING A TIER 1 PUBLIC NOTICE

(1) Violation of the MCL for total coliforms when fecal coliform or E. coli are present in the water distribution system (as specified in § 141.63(b)), or when the water system fails to test for fecal coliforms or E. coli when any repeat sample tests positive for coliform (as specified in § 141.21(e));
(2) Violation of the MCL for nitrate, nitrite, or total nitrate and nitrite, as defined in § 141.62, or when the water system fails to take a confirmation sample within 24 hours of the system's receipt of the first sample showing an exceedance of the nitrate or nitrite MCL, as specified in § 141.23(f)(2);
(3) Exceedance of the nitrate MCL by noncommunity water systems, where permitted to exceed the MCL by the primacy agency under § 141.11(d), as required under § 141.209;
(4) Violation of the MRDL for chlorine dioxide, as defined in § 141.65(a), when one or more samples taken in the distribution system the day following an exceedance of the MRDL at the entrance of the distribution system exceed the MRDL, or when the water system does not take the required samples in the distribution system, as specified in § 141.133(c)(2)(i);
(5) Violation of the turbidity MCL under § 141.13(b), where the primacy agency determines after consultation that a Tier 1 notice is required or where consultation does not take place within 24 hours after the system learns of the violation;

TABLE 1 TO § 141.202.—VIOLATION CATEGORIES AND OTHER SITUATIONS REQUIRING A TIER 1 PUBLIC NOTICE—Continued

(6) Violation of the Surface Water Treatment Rule (SWTR) or Interim Enhanced Surface Water Treatment rule (IESWTR) treatment technique requirement resulting from a single exceedance of the maximum allowable turbidity limit (as identified in Appendix A), where the primacy agency determines after consultation that a Tier 1 notice is required or where consultation does not take place within 24 hours after the system learns of the violation;
(7) Occurrence of a waterborne disease outbreak, as defined in § 141.2, or other waterborne emergency (such as a failure or significant interruption in key water treatment processes, a natural disaster that disrupts the water supply or distribution system, or a chemical spill or unexpected loading of possible pathogens into the source water that significantly increases the potential for drinking water contamination);
(8) Other violations or situations with significant potential to have serious adverse effects on human health as a result of short-term exposure, as determined by the primacy agency either in its regulations or on a case-by-case basis.

(b) *When is the Tier 1 public notice to be provided?* What additional steps are required? Public water systems must:

(1) Provide a public notice as soon as practical but no later than 24 hours after the system learns of the violation;

(2) Initiate consultation with the primacy agency as soon as practical, but no later than 24 hours after the public water system learns of the violation or situation, to determine additional public notice requirements; and

(3) Comply with any additional public notification requirements (including any repeat notices or direction on the duration of the posted notices) that are established as a result of the consultation with the primacy agency. Such requirements may include the timing, form, manner, frequency, and content of repeat notices (if any) and other actions designed to reach all persons served.

(c) What is the form and manner of the public notice? Public water systems must provide the notice within 24 hours in a form and manner reasonably calculated to reach all persons served. The form and manner used by the public water system are to fit the specific situation, but must be designed to reach residential, transient, and nontransient users of the water system. In order to reach all persons served, water systems are to use, at a minimum, one or more of the following forms of delivery:

(1) Appropriate broadcast media (such as radio and television);

(2) Posting of the notice in conspicuous locations throughout the area served by the water system;

(3) Hand delivery of the notice to persons served by the water system; or

(4) Another delivery method approved in writing by the primacy agency.

§ 141.203 Tier 2 Public Notice—Form, manner, and frequency of notice.

(a) Which violations or situations require a Tier 2 public notice? Table 1 of this section lists the violation categories and other situations requiring a Tier 2 public notice. Appendix A to this subpart identifies the tier assignment for each specific violation or situation.

TABLE 1 TO § 141.203.—VIOLATION CATEGORIES AND OTHER SITUATIONS REQUIRING A TIER 2 PUBLIC NOTICE

(1) All violations of the MCL, MRDL, and treatment technique requirements, except where a Tier 1 notice is required under § 141.202(a) or where the primacy agency determines that a Tier 1 notice is required;
(2) Violations of the monitoring and testing procedure requirements, where the primacy agency determines that a Tier 2 rather than a Tier 3 public notice is required, taking into account potential health impacts and persistence of the violation; and
(3) Failure to comply with the terms and conditions of any variance or exemption in place.

(b) *When is the Tier 2 public notice to be provided?*

(1) Public water systems must provide the public notice as soon as practical, but no later than 30 days after the system learns of the violation. If the public notice is posted, the notice must remain in place for as long as the violation or situation persists, but in no case for less than seven days, even if the violation or situation is resolved. The primacy agency may, in appropriate circumstances, allow additional time for the initial notice of up to three months from the date the system learns of the violation. It is not appropriate for the primacy agency to grant an extension to the 30-day deadline for any unresolved violation or to allow across-the-board extensions by rule or policy for other violations or situations requiring a Tier 2 public notice. Extensions granted by the primacy agency must be in writing.

(2) The public water system must repeat the notice every three months as

long as the violation or situation persists, unless the primacy agency determines that appropriate circumstances warrant a different repeat notice frequency. In no circumstance may the repeat notice be given less frequently than once per year. It is not appropriate for the primacy agency to allow less frequent repeat notice for an MCL violation under the Total Coliform Rule or a treatment technique violation under the Surface Water Treatment Rule or Interim Enhanced Surface Water Treatment Rule. It is also not appropriate for the primacy agency to allow through its rules or policies across-the-board reductions in the repeat notice frequency for other ongoing violations requiring a Tier 2 repeat notice. Primacy agency determinations allowing repeat notices to be given less frequently than once every three months must be in writing.

(3) For the turbidity violations specified in this paragraph, public water systems must consult with the primacy agency as soon as practical but no later than 24 hours after the public water system learns of the violation, to determine whether a Tier 1 public notice under § 141.202(a) is required to protect public health. When consultation does not take place within the 24-hour period, the water system must distribute a Tier 1 notice of the violation within the next 24 hours (*i.e.,* no later than 48 hours after the system learns of the violation), following the requirements under § 141.202(b) and (c). Consultation with the primacy agency is required for:

(i) Violation of the turbidity MCL under § 141.13(b); or

(ii) Violation of the SWTR or IESWTR treatment technique requirement resulting from a single exceedance of the maximum allowable turbidity limit.

(c) *What is the form and manner of the Tier 2 public notice?* Public water systems must provide the initial public notice and any repeat notices in a form and manner that is reasonably calculated to reach persons served in the required time period. The form and manner of the public notice may vary based on the specific situation and type of water system, but it must at a minimum meet the following requirements:

(1) Unless directed otherwise by the primacy agency in writing, community water systems must provide notice by:

(i) Mail or other direct delivery to each customer receiving a bill and to other service connections to which water is delivered by the public water system; and

(ii) Any other method reasonably calculated to reach other persons regularly served by the system, if they would not normally be reached by the notice required in paragraph (c)(1)(i) of this section. Such persons may include those who do not pay water bills or do not have service connection addresses (*e.g.,* house renters, apartment dwellers, university students, nursing home patients, prison inmates, etc.). Other methods may include: Publication in a local newspaper; delivery of multiple copies for distribution by customers that provide their drinking water to others (*e.g.,* apartment building owners or large private employers); posting in public places served by the system or on the Internet; or delivery to community organizations.

(2) Unless directed otherwise by the primacy agency in writing, non-community water systems must provide notice by:

(i) Posting the notice in conspicuous locations throughout the distribution system frequented by persons served by the system, or by mail or direct delivery to each customer and service connection (where known); and

(ii) Any other method reasonably calculated to reach other persons served by the system if they would not normally be reached by the notice required in paragraph (c)(2)(i) of this section. Such persons may include those served who may not see a posted notice because the posted notice is not in a location they routinely pass by. Other methods may include: Publication in a local newspaper or newsletter distributed to customers; use of E-mail to notify employees or students; or, delivery of multiple copies in central locations (*e.g.,* community centers).

§ 141.204 Tier 3 Public Notice—Form, manner, and frequency of notice.

(a) Which violations or situations require a Tier 3 public notice? Table 1 of this section lists the violation categories and other situations requiring a Tier 3 public notice. Appendix A to this subpart identifies the tier assignment for each specific violation or situation.

TABLE 1 TO § 141.204.—VIOLATION CATEGORIES AND OTHER SITUATIONS REQUIRING A TIER 3 PUBLIC NOTICE

(1) Monitoring violations under 40 CFR part 141, except where a Tier 1 notice is required under § 141.202(a) or where the primacy agency determines that a Tier 2 notice is required;

TABLE 1 TO § 141.204.—VIOLATION CATEGORIES AND OTHER SITUATIONS REQUIRING A TIER 3 PUBLIC NOTICE—Continued

(2) Failure to comply with a testing procedure established in 40 CFR part 141, except where a Tier 1 notice is required under § 141.202(a)) or where the primacy agency determines that a Tier 2 notice is required;

(3) Operation under a variance granted under Section 1415 or an exemption granted under Section 1416 of the Safe Drinking Water Act;

(4) Availability of unregulated contaminant monitoring results, as required under § 141.207; and

(5) Exceedance of the fluoride secondary maximum contaminant level (SMCL), as required under § 141.208.

(b) *When is the Tier 3 public notice to be provided?*

(1) Public water systems must provide the public notice not later than one year after the public water system learns of the violation or situation or begins operating under a variance or exemption. Following the initial notice, the public water system must repeat the notice annually for as long as the violation, variance, exemption, or other situation persists. If the public notice is posted, the notice must remain in place for as long as the violation, variance, exemption, or other situation persists, but in no case less than seven days (even if the violation or situation is resolved).

(2) (2) Instead of individual Tier 3 public notices, a public water system may use an annual report detailing all violations and situations that occurred during the previous twelve months, as long as the timing requirements of paragraph (b)(1) of this section are met.

(c) *What is the form and manner of the Tier 3 public notice?* Public water systems must provide the initial notice and any repeat notices in a form and manner that is reasonably calculated to reach persons served in the required time period. The form and manner of the public notice may vary based on the specific situation and type of water system, but it must at a minimum meet the following requirements:

(1) Unless directed otherwise by the primacy agency in writing, community water systems must provide notice by:

(i) Mail or other direct delivery to each customer receiving a bill and to other service connections to which water is delivered by the public water system; and

(ii) Any other method reasonably calculated to reach other persons regularly served by the system, if they would not normally be reached by the notice required in paragraph (c)(1)(i) of

this section. Such persons may include those who do not pay water bills or do not have service connection addresses (*e.g.,* house renters, apartment dwellers, university students, nursing home patients, prison inmates, etc.). Other methods may include: Publication in a local newspaper; delivery of multiple copies for distribution by customers that provide their drinking water to others (*e.g.,* apartment building owners or large private employers); posting in public places or on the Internet; or delivery to community organizations.

(2) Unless directed otherwise by the primacy agency in writing, non-community water systems must provide notice by:

(i) Posting the notice in conspicuous locations throughout the distribution system frequented by persons served by the system, or by mail or direct delivery to each customer and service connection (where known); and

(ii) Any other method reasonably calculated to reach other persons served by the system, if they would not normally be reached by the notice required in paragraph (c)(2)(i) of this section. Such persons may include those who may not see a posted notice because the notice is not in a location they routinely pass by. Other methods may include: Publication in a local newspaper or newsletter distributed to customers; use of E-mail to notify employees or students; or, delivery of multiple copies in central locations (*e.g.,* community centers).

(d) In what situations may the Consumer Confidence Report be used to meet the Tier 3 public notice requirements? For community water systems, the Consumer Confidence Report (CCR) required under Subpart O of this part may be used as a vehicle for the initial Tier 3 public notice and all required repeat notices, as long as:

(1) The CCR is provided to persons served no later than 12 months after the system learns of the violation or situation as required under § 141.204(b);

(2) The Tier 3 notice contained in the CCR follows the content requirements under § 141.205; and

(3) The CCR is distributed following the delivery requirements under § 141.204(c).

§ 141.205 Content of the public notice.

(a) What elements must be included in the public notice for violations of National Primary Drinking Water Regulations (NPDWR) or other situations requiring a public notice? When a public water system violates a NPDWR or has a situation requiring public notification, each public notice must include the following elements:

(1) A description of the violation or situation, including the contaminant(s) of concern, and (as applicable) the contaminant level(s);

(2) When the violation or situation occurred;

(3) Any potential adverse health effects from the violation or situation, including the standard language under paragraph (d)(1) or (d)(2) of this section, whichever is applicable;

(4) The population at risk, including subpopulations particularly vulnerable if exposed to the contaminant in their drinking water;

(5) Whether alternative water supplies should be used;

(6) What actions consumers should take, including when they should seek medical help, if known;

(7) What the system is doing to correct the violation or situation;

(8) When the water system expects to return to compliance or resolve the situation;

(9) The name, business address, and phone number of the water system owner, operator, or designee of the public water system as a source of additional information concerning the notice; and

(10) A statement to encourage the notice recipient to distribute the public notice to other persons served, using the standard language under paragraph (d)(3) of this section, where applicable.

(b) What elements must be included in the public notice for public water systems operating under a variance or exemption?

(1) If a public water system has been granted a variance or an exemption, the public notice must contain:

(i) An explanation of the reasons for the variance or exemption;

(ii) The date on which the variance or exemption was issued;

(iii) A brief status report on the steps the system is taking to install treatment, find alternative sources of water, or otherwise comply with the terms and schedules of the variance or exemption; and

(iv) A notice of any opportunity for public input in the review of the variance or exemption.

(2) If a public water system violates the conditions of a variance or exemption, the public notice must contain the ten elements listed in paragraph (a) of this section.

(c) How is the public notice to be presented?

(1) Each public notice required by this section:

(i) Must be displayed in a conspicuous way when printed or posted;

(ii) Must not contain overly technical language or very small print;

(iii) Must not be formatted in a way that defeats the purpose of the notice;

(iv) Must not contain language which nullifies the purpose of the notice.

(2) Each public notice required by this section must comply with multilingual requirements, as follows:

(i) For public water systems serving a large proportion of non-English speaking consumers, as determined by the primacy agency, the public notice must contain information in the appropriate language(s) regarding the importance of the notice or contain a telephone number or address where persons served may contact the water system to obtain a translated copy of the notice or to request assistance in the appropriate language.

(ii) In cases where the primacy agency has not determined what constitutes a large proportion of non-English speaking consumers, the public water system must include in the public notice the same information as in paragraph (c)(2)(i) of this section, where appropriate to reach a large proportion of non-English speaking persons served by the water system.

(d) What standard language must public water systems include in their public notice? Public water systems are required to include the following standard language in their public notice:

(1) Standard health effects language for MCL or MRDL violations, treatment technique violations, and violations of the condition of a variance or exemption. Public water systems must include in each public notice the health effects language specified in Appendix B to this subpart corresponding to each MCL, MRDL, and treatment technique violation listed in Appendix A to this subpart, and for each violation of a condition of a variance or exemption.

(2) Standard language for monitoring and testing procedure violations. Public water systems must include the following language in their notice, including the language necessary to fill in the blanks, for all monitoring and testing procedure violations listed in Appendix A to this subpart:

> We are required to monitor your drinking water for specific contaminants on a regular basis. Results of regular monitoring are an indicator of whether or not your drinking water meets health standards. During [compliance period], we ''did not monitor or test'' or ''did not complete all monitoring or testing'' for [contaminant(s)], and therefore cannot be sure of the quality of your drinking water during that time.

(3) Standard language to encourage the distribution of the public notice to all persons served. Public water systems must include in their notice the following language (where applicable):

Please share this information with all the other people who drink this water, especially those who may not have received this notice directly (for example, people in apartments, nursing homes, schools, and businesses). You can do this by posting this notice in a public place or distributing copies by hand or mail.

§ 141.206 Notice to new billing units or new customers.

(a) What is the requirement for community water systems? Community water systems must give a copy of the most recent public notice for any continuing violation, the existence of a variance or exemption, or other ongoing situations requiring a public notice to all new billing units or new customers prior to or at the time service begins.

(b) What is the requirement for non-community water systems? Non-community water systems must continuously post the public notice in conspicuous locations in order to inform new consumers of any continuing violation, variance or exemption, or other situation requiring a public notice for as long as the violation, variance, exemption, or other situation persists.

§ 141.207 Special notice of the availability of unregulated contaminant monitoring results.

(a) When is the special notice to be given? The owner or operator of a community water system or non-transient, non-community water system required to monitor under § 141.40 must notify persons served by the system of the availability of the results of such sampling no later than 12 months after the monitoring results are known.

(b) What is the form and manner of the special notice? The form and manner of the public notice must follow the requirements for a Tier 3 public notice prescribed in §§ 141.204(c), (d)(1), and (d)(3). The notice must also identify a person and provide the telephone number to contact for information on the monitoring results.

§ 141.208 Special notice for exceedance of the SMCL for fluoride.

(a) When is the special notice to be given? Community water systems that exceed the fluoride secondary maximum contaminant level (SMCL) of 2 mg/l as specified in § 143.3 (determined by the last single sample taken in accordance with § 141.23), but do not exceed the maximum contaminant level (MCL) of 4 mg/l for fluoride (as specified in § 141.62), must provide the public notice in paragraph (c) of this section to persons served. Public notice must be provided as soon as practical but no later than 12 months from the day the water system learns of the exceedance. A copy of the notice must also be sent to all new billing units and new customers at the time service begins and to the State public health officer. The public water system must repeat the notice at least annually for as long as the SMCL is exceeded. If the public notice is posted, the notice must remain in place for as long as the SMCL is exceeded, but in no case less than seven days (even if the exceedance is eliminated). On a case-by-case basis, the primacy agency may require an initial notice sooner than 12 months and repeat notices more frequently than annually.

(b) What is the form and manner of the special notice? The form and manner of the public notice (including repeat notices) must follow the requirements for a Tier 3 public notice in § 141.204(c) and (d)(1) and (d)(3).

(c) What mandatory language must be contained in the special notice? The notice must contain the following language, including the language necessary to fill in the blanks:

This is an alert about your drinking water and a cosmetic dental problem that might affect children under nine years of age. At low levels, fluoride can help prevent cavities, but children drinking water containing more than 2 milligrams per liter (mg/l) of fluoride may develop cosmetic discoloration of their permanent teeth (dental fluorosis). The drinking water provided by your community water system [*name*] has a fluoride concentration of [*insert value*] mg/l.

Dental fluorosis, in its moderate or severe forms, may result in a brown staining and/or pitting of the permanent teeth. This problem occurs only in developing teeth, before they erupt from the gums. Children under nine should be provided with alternative sources of drinking water or water that has been treated to remove the fluoride to avoid the possibility of staining and pitting of their permanent teeth. You may also want to contact your dentist about proper use by young children of fluoride-containing products. Older children and adults may safely drink the water.

Drinking water containing more than 4 mg/L of fluoride (the U.S. Environmental Protection Agency's drinking water standard) can increase your risk of developing bone disease. Your drinking water does not contain more than 4 mg/l of fluoride, but we're required to notify you when we discover that the fluoride levels in your drinking water exceed 2 mg/l because of this cosmetic dental problem.

For more information, please call [name of water system contact] of [name of community water system] at [phone number]. Some home water treatment units are also available to remove fluoride from drinking water. To learn more about available home water treatment units, you may call NSF International at 1–877–8–NSF–HELP.''

§ 141.209 Special notice for nitrate exceedances above MCL by non-community water systems (NCWS), where granted permission by the primacy agency under § 141.11(d)

(a) When is the special notice to be given? The owner or operator of a non-community water system granted permission by the primacy agency under § 141.11(d) to exceed the nitrate MCL must provide notice to persons served according to the requirements for a Tier 1 notice under § 141.202(a) and (b).

(b) What is the form and manner of the special notice? Non-community water systems granted permission by the primacy agency to exceed the nitrate MCL under § 141.11(d) must provide continuous posting of the fact that nitrate levels exceed 10 mg/l and the potential health effects of exposure, according to the requirements for Tier 1 notice delivery under § 141.202(c) and the content requirements under § 141.205.

§ 141.210 Notice by primacy agency on behalf of the public water system.

(a) May the primacy agency give the notice on behalf of the public water system? The primacy agency may give the notice required by this subpart on behalf of the owner and operator of the public water system if the primacy agency complies with the requirements of this subpart.

(b) What is the responsibility of the public water system when notice is given by the primacy agency? The owner or operator of the public water system remains responsible for ensuring that the requirements of this subpart are met.

APPENDIX A TO SUBPART Q OF PART 141.—NPDWR VIOLATIONS AND OTHER SITUATIONS REQUIRING PUBLIC NOTICE [1]

Contaminant	MCL/MRDL/TT violations [2]		Monitoring & testing procedure violations	
	Tier of public notice required	Citation	Tier of public notice required	Citation
I. Violations of National Primary Drinking Water Regulations (NPDWR): [3]				
A. Microbiological Contaminants				
1. Total coliform	2	141.63(a)	3	141.21(a)–(e)
2. Fecal coliform/E. coli	1	141.63(b)	[4] 1, 3	141.21(e)
3. Turbidity MCL	2	141.13(a)	3	141.22
4. Turbidity MCL (average of 2 days' samples >5 NTU)	[5] 2, 1	141.13(b)	3	141.22
5. Turbidity (for TT violations resulting from a single exceedance of maximum allowable turbidity level)	[6] 2, 1	141.71(a)(2), 141.71(c)(2)(i), 141.73(a)(2), 141.73(b)(2), 141.73(c)(2), 141.73(d), 141.173(a)(2), 141.173(b)	3	141.74(a)(1), 141.74(b)(2), 141.74(c)(1), 141.174
6. Surface Water Treatment Rule violations, other than violations resulting from single exceedance of max. allowable turbidity level (TT)	2	141.70–141.73	3	141.74
7. Interim Enhanced Surface Water Treatment Rule violations, other than violations resulting from single exceedance of max. turbidity level (TT)	2	[7] 141.170–141.173	3	141.172, 141.174
B. Inorganic Chemicals (IOCs)				
1. Antimony	2	141.62(b)	3	141.23(a), (c)
2. Arsenic	2	141.11(b), 141.23(n)	3	141.23(a), (l), (m)
3. Asbestos (fibers >10 μm)	2	141.62(b)	3	141.23(a)–(b)
4. Barium	2	141.62(b)	3	141.23(a), (c)
5. Beryllium	2	141.62(b)	3	141.23(a), (c)
6. Cadmium	2	141.62(b)	3	141.23(a), (c)
7. Chromium (total)	2	141.62(b)	3	141.23(a), (c)
8. Cyanide	2	141.62(b)	3	141.23(a), (c)
9. Fluoride	2	141.62(b)	3	141.23(a), (c)
10. Mercury (inorganic)	2	141.62(b)	3	141.23(a), (c)
11. Nitrate	1	141.62(b)	[8] 1, 3	141.23(a), (d), 141.23(f)(2)
12. Nitrite	1	141.62(b)	[8] 1, 3	141.23(a), (e), 141.23(f)(2)
13. Total Nitrate and Nitrite	1	141.62(b)	3	141.23(a)
14. Selenium	2	141.62(b)	3	141.23(a), (c)
15. Thallium	2	141.62(b)	3	141.23(a), (c)
C. Lead and Copper Rule (Action Level for lead is 0.015 mg/L, for copper is 1.3 mg/L)				
1. Lead and Copper Rule (TT)	2	141.80–141.85	3	141.86–141.89
D. Synthetic Organic Chemicals (SOCs)				
1. 2,4–D	2	141.61(c)	3	141.24(h)
2. 2,4,5–TP (Silvex)	2	141.61(c)	3	141.24(h)
3. Alachlor	2	141.61(c)	3	141.24(h)
4. Atrazine	2	141.61(c)	3	141.24(h)
5. Benzo(a)pyrene (PAHs)	2	141.61(c)	3	141.24(h)
6. Carbofuran	2	141.61(c)	3	141.24(h)
7. Chlordane	2	141.61(c)	3	141.24(h)
8. Dalapon	2	141.61(c)	3	141.24(h)
9. Di (2-ethylhexyl) adipate	2	141.61(c)	3	141.24(h)
10. Di (2-ethylhexyl) phthalate	2	141.61(c)	3	141.24(h)
11. Dibromochloropropane	2	141.61(c)	3	141.24(h)
12. Dinoseb	2	141.61(c)	3	141.24(h)
13. Dioxin (2,3,7,8-TCDD)	2	141.61(c)	3	141.24(h)
14. Diquat	2	141.61(c)	3	141.24(h)
15. Endothall	2	141.61(c)	3	141.24(h)
16. Endrin	2	141.61(c)	3	141.24(h)
17. Ethylene dibromide	2	141.61(c)	3	141.24(h)
18. Glyphosate	2	141.61(c)	3	141.24(h)
19. Heptachlor	2	141.61(c)	3	141.24(h)
20. Heptachlor epoxide	2	141.61(c)	3	141.24(h)
21. Hexachlorobenzene	2	141.61(c)	3	141.24(h)
22. Hexachlorocyclo-pentadiene	2	141.61(c)	3	141.24(h)
23. Lindane	2	141.61(c)	3	141.24(h)

APPENDIX A TO SUBPART Q OF PART 141.—NPDWR VIOLATIONS AND OTHER SITUATIONS REQUIRING PUBLIC NOTICE [1]—Continued

Contaminant	MCL/MRDL/TT violations [2]		Monitoring & testing procedure violations	
	Tier of public notice required	Citation	Tier of public notice required	Citation
24. Methoxychlor	2	141.61(c)	3	141.24(h)
25. Oxamyl (Vydate)	2	141.61(c)	3	141.24(h)
26. Pentachlorophenol	2	141.61(c)	3	141.24(h)
27. Picloram	2	141.61(c)	3	141.24(h)
28. Polychlorinated biphenyls (PCBs)	2	141.61(c)	3	141.24(h)
29. Simazine	2	141.61(c)	3	141.24(h)
30. Toxaphene	2	141.61(c)	3	141.24(h)
E. Volatile Organic Chemicals (VOCs)				
1. Benzene	2	141.61(a)	3	141.24(f)
2. Carbon tetrachloride	2	141.61(a)	3	141.24(f)
3. Chlorobenzene (monochlorobenzene)	2	141.61(a)	3	141.24(f)
4. o-Dichlorobenzene	2	141.61(a)	3	141.24(f)
5. p-Dichlorobenzene	2	141.61(a)	3	141.24(f)
6. 1,2-Dichloroethane	2	141.61(a)	3	141.24(f)
7. 1,1-Dichloroethylene	2	141.61(a)	3	141.24(f)
8. cis-1,2-Dichloroethylene	2	141.61(a)	3	141.24(f)
9. trans-1,2-Dichloroethylene	2	141.61(a)	3	141.24(f)
10. Dichloromethane	2	141.61(a)	3	141.24(f)
11. 1,2-Dichloropropane	2	141.61(a)	3	141.24(f)
12. Ethylbenzene	2	141.61(a)	3	141.24(f)
13. Styrene	2	141.61(a)	3	141.24(f)
14. Tetrachloroethylene	2	141.61(a)	3	141.24(f)
15. Toluene	2	141.61(a)	3	141.24(f)
16. 1,2,4-Trichlorobenzene	2	141.61(a)	3	141.24(f)
17. 1,1,1-Trichloroethane	2	141.61(a)	3	141.24(f)
18. 1,1,2-Trichloroethane	2	141.61(a)	3	141.24(f)
19. Trichloroethylene	2	141.61(a)	3	141.24(f)
20. Vinyl chloride	2	141.61(a)	3	141.24(f)
21. Xylenes (total)	2	141.61(a)	3	141.24(f)
F. Radioactive Contaminants				
1. Beta/photon emitters	2	141.16	3	141.25(a), 141.26(b)
2. Alpha emitters	2	141.15(b)	3	141.25(a), 141.26(a)
3. Combined radium (226 & 228)	2	141.15(a)	3	141.25(a), 141.26(a)
G. Disinfection Byproducts (DBPs), Byproduct Precursors, Disinfectant Residuals. Where disinfection is used in the treatment of drinking water, disinfectants combine with organic and inorganic matter present in water to form chemicals called disinfection byproducts (DBPs). EPA sets standards for controlling the levels of disinfectants and DBPs in drinking water, including trihalomethanes (THMs) and haloacetic acids (HAAs).[9]				
1. Total trihalomethanes (TTHMs)	2	[10] 141.12, 141.64(a)	3	141.30, 141.132(a)–(b)
2. Haloacetic Acids (HAA5)	2	141.64(a)	3	141.132(a)–(b)
3. Bromate	2	141.64(a)	3	141.132(a)–(b)
4. Chlorite	2	141.64(a)	3	141.132(a)–(b)
5. Chlorine (MRDL)	2	141.65(a)	3	141.132(a), (c)
6. Chloramine (MRDL)	2	141.65(a)	3	141.132(a), (c)
7. Chlorine dioxide (MRDL), where any 2 consecutive daily samples at entrance to distribution system only are above MRDL	2	141.65(a), 141.133(c)(3)	2 [11], 3	141.132(a), (c), 141.133(c)(2)
8. Chlorine dioxide (MRDL), where sample(s) in distribution system the next day are also above MRDL	[12] 1	141.65(a), 141.133(c)(3)	1	141.132(a), (c), 141.133(c)(2)
9. Control of DBP precursors—TOC (TT)	2	141.135(a)–(b)	3	141.132(a), (d)
10. Bench marking and disinfection profiling	N/A	N/A	3	141.172
11. Development of monitoring plan	N/A	N/A	3	141.132(f)
H. Other Treatment Techniques				
1. Acrylamide (TT)	2	141.111	N/A	N/A
2. Epichlorohydrin (TT)	2	141.111	N/A	N/A
II. Unregulated Contaminant Monitoring: [13]				
A. Unregulated contaminants	N/A	N/A	3	141.40
B. Nickel	N/A	N/A	3	141.23(c), (k)

APPENDIX A TO SUBPART Q OF PART 141.—NPDWR VIOLATIONS AND OTHER SITUATIONS REQUIRING PUBLIC NOTICE [1]—Continued

Contaminant	MCL/MRDL/TT violations [2]		Monitoring & testing procedure violations	
	Tier of public notice required	Citation	Tier of public notice required	Citation
III. Public Notification for Variances and Exemptions:				
A. Operation under a variance or exemption	3	[14] 1415, 1416,	N/A	N/A
B. Violation of conditions of a variance or exemption	2	1415, 1416, [15] 142.307	N/A	N/A
IV. Other Situations Requiring Public Notification:				
A. Fluoride secondary maximum contaminant level (SMCL) exceedance	3	143.3	N/A	N/A
B. Exceedance of nitrate MCL for non-community systems, as allowed by primacy agency	1	141.11(d)	N/A	N/A
C. Availability of unregulated contaminant monitoring data	3	141.40	N/A	N/A
D. Waterborne disease outbreak	1	141.2, 141.71(c)(2)(ii)	N/A	N/A
E. Other waterborne emergency [16]	1	N/A	N/A	N/A
F. Other situations as determined by primacy agency	[17] 1, 2, 3	N/A	N/A	N/A

Appendix A—Endnotes

1. Violations and other situations not listed in this table (e.g., reporting violations and failure to prepare Consumer Confidence Reports), do not require notice, unless otherwise determined by the primary agency. Primacy agencies may, at their option, also require a more stringent public notice tier (e.g., Tier 1 instead of Tier 2 or Tier 2 instead of Tier 3) for specific violations and situations listed in this Appendix, as authorized under § 141.202(a) and § 141.203(a).

2. MCL—Maximum contaminant level, MRDL—Maximum residual disinfectant level, TT—Treatment technique

3. The term Violations of National Primary Drinking Water Regulations (NPDWR) is used here to include violations of MCL, MRDL, treatment technique, monitoring, and testing procedure requirements.

4. Failure to test for fecal coliform or E. coli is a Tier 1 violation if testing is not done after any repeat sample tests positive for coliform. All other total coliform monitoring and testing procedure violations are Tier 3.

5. Systems that violate the turbidity MCL of 5 NTU based on an average of measurements over two consecutive days must consult with the primacy agency within 24 hours after learning of the violation. Based on this consultation, the primacy agency may subsequently decide to elevate the violation to Tier 1. If a system is unable to make contact with the primacy agency in the 24-hour period, the violation is automatically elevated to Tier 1.

6. Systems with treatment technique violations involving a single exceedance of a maximum turbidity limit under the Surface Water Treatment Rule (SWTR) or the Interim Enhanced Surface Water Treatment Rule (IESWTR) are required to consult with the primacy agency within 24 hours after learning of the violation. Based on this consultation, the primacy agency may subsequently decide to elevate the violation to Tier 1. If a system is unable to make contact with the primacy agency in the 24-hour period, the violation is automatically elevated to Tier 1.

7. Most of the requirements of the Interim Enhanced Surface Water Treatment Rule (63 *FR* 69477) (§§ 141.170–141.171, 141.173–141.174) become effective January 1, 2002 for Subpart H systems (surface water systems and ground water systems under the direct influence of surface water) serving at least 10,000 persons. However, § 141.172 has some requirements that become effective as early as April 16, 1999. The Surface Water Treatment Rule remains in effect for systems serving at least 10,000 persons even after 2002; the Interim Enhanced Surface Water Treatment Rule adds additional requirements and does not in many cases supercede the SWTR.

8. Failure to take a confirmation sample within 24 hours for nitrate or nitrite after an initial sample exceeds the MCL is a Tier 1 violation. Other monitoring violations for nitrate are Tier 3.

9. Subpart H community and non-transient non-community systems serving ≥10,000 must comply with new DBP MCLs, disinfectant MRDLs, and related monitoring requirements beginning January 1, 2002. All other community and non-transient non-community systems must meet the MCLs and MRDLs beginning January 1, 2004. Subpart H transient non-community systems serving 10,000 or more persons and using chlorine dioxide as a disinfectant or oxidant must comply with the chlorine dioxide MRDL beginning January 1, 2002. Subpart H transient non-community systems serving fewer than 10,000 persons and using only ground water not under the direct influence of surface water and using chlorine dioxide as a disinfectant or oxidant must comply with the chlorine dioxide MRDL beginning January 1, 2004.

10. § 141.12 will no longer apply after January 1, 2004.

11. Failure to monitor for chlorine dioxide at the entrance to the distribution system the day after exceeding the MRDL at the entrance to the distribution system is a Tier 2 violation.

12. If any daily sample taken at the entrance to the distribution system exceeds the MRDL for chlorine dioxide and one or more samples taken in the distribution system the next day exceed the MRDL, Tier 1 notification is required. Failure to take the required samples in the distribution system after the MRDL is exceeded at the entry point also triggers Tier 1 notification.

13. Some water systems must monitor for certain unregulated contaminants listed in § 141.40.

14. This citation refers to §§ 1415 and 1416 of the Safe Drinking Water Act. §§ 1415 and 1416 require that ''a schedule prescribed . . . for a public water system granted a variance [or exemption] shall require compliance by the system . . .''

15. In addition to §§ 1415 and 1416 of the Safe Drinking Water Act, 40 CFR 142.307 specifies the items and schedule milestones that must be included in a variance for small systems.

16. Other waterborne emergencies require a Tier 1 public notice under § 141.202(a) for situations that do not meet the definition of a waterborne disease outbreak given in 40 CFR 141.2 but that still have the potential to have serious adverse effects on health as a result of short-term exposure. These could include outbreaks not related to treatment deficiencies, as well as situations that have the potential to cause outbreaks, such as failures or significant interruption in water treatment processes, natural disasters that disrupt the water supply or distribution system, chemical spills, or unexpected loading of possible pathogens into the source water.

17. Primacy agencies may place other situations in any tier they believe appropriate, based on threat to public health.

APPENDIX B TO SUBPART Q OF PART 141.—STANDARD HEALTH EFFECTS LANGUAGE FOR PUBLIC NOTIFICATION

Contaminant	MCLG [1] mg/L	MCL [2] mg/L	Standard health effects language for public notification
National Primary Drinking Water Regulations (NPDWR):			
A. Microbiological Contaminants:			
1a. Total coliform	Zero	See footnote [3]	Coliforms are bacteria that are naturally present in the environment and are used as an indicator that other, potentially-harmful, bacteria may be present. Coliforms were found in more samples than allowed and this was a warning of potential problems.
1b. Fecal coliform/E. coli	Zero	Zero	Fecal coliforms and E. coli are bacteria whose presence indicates that the water may be contaminated with human or animal wastes. Microbes in these wastes can cause short-term effects, such as diarrhea, cramps, nausea, headaches, or other symptoms. They may pose a special health risk for infants, young children, some of the elderly, and people with severely compromised immune systems.
2a. Turbidity (MCL) [4]	None	1 NTU [5]/5 NTU	Turbidity has no health effects. However, turbidity can interfere with disinfection and provide a medium for microbial growth. Turbidity may indicate the presence of disease-causing organisms. These organisms include bacteria, viruses, and parasites that can cause symptoms such as nausea, cramps, diarrhea and associated headaches.
2b. Turbidity (SWTR TT) [6]	None	TT [7]	Turbidity has no health effects. However, turbidity can interfere with disinfection and provide a medium for microbial growth. Turbidity may indicate the presence of disease-causing organisms. These organisms include bacteria, viruses, and parasites that can cause symptoms such as nausea, cramps, diarrhea and associated headaches.
2c. Turbidity (IESWTR TT) [8]	None	TT	Turbidity has no health effects. However, turbidity can interfere with disinfection and provide a medium for microbial growth. Turbidity may indicate the presence of disease-causing organisms. These organisms include bacteria, viruses, and parasites that can cause symptoms such as nausea, cramps, diarrhea and associated headaches.
B. Surface Water Treatment Rule (SWTR) and Interim Enhanced Surface Water Treatment Rule (IESWTR) violations:			
3. Giardia lamblia (SWTR/IESWTR).	Zero	TT [10]	Inadequately treated water may contain disease-causing organisms. These organisms include bacteria, viruses, and parasites which can cause symptoms such as nausea, cramps, diarrhea, and associated headaches.
4. Viruses (SWTR/IESWTR).			
5. Heterotrophic plate count (HPC) bacteria [9] (SWTR/IESWTR).			
6. Legionella (SWTR/IESWTR).			
7. Cryptosporidium (IESWTR).			
8. Antimony	0.006	0.006	Some people who drink water containing antimony well in excess of the MCL over many years could experience increases in blood cholesterol and decreases in blood sugar.
9. Arsenic	None	0.05	Some people who drink water containing arsenic in excess of the MCL over many years could experience skin damage or problems with their circulatory system, and may have an increased risk of getting cancer.
10. Asbestos (10 µm)	7 MFL [11]	7 MFL	Some people who drink water containing asbestos in excess of the MCL over many years may have an increased risk of developing benign intestinal polyps.
11. Barium	2	2	Some people who drink water containing barium in excess of the MCL over many years could experience an increase in their blood pressure.
12. Beryllium	0.004	0.004	Some people who drink water containing beryllium well in excess of the MCL over many years could develop intestinal lesions.
13. Cadmium	0.005	0.005	Some people who drink water containing cadmium in excess of the MCL over many years could experience kidney damage.
14. Chromium (total)	0.1	0.1	Some people who use water containing chromium well in excess of the MCL over many years could experience allergic dermatitis.
15. Cyanide	0.2	0.2	Some people who drink water containing cyanide well in excess of the MCL over many years could experience nerve damage or problems with their thyroid.
16. Fluoride	4.0	4.0	Some people who drink water containing fluoride in excess of the MCL over many years could get bone disease, including pain and tenderness of the bones. Fluoride in drinking water at half the MCL or more may cause mottling of children's teeth, usually in children less than nine years old. Mottling, also known as dental fluorosis, may include brown staining and/or pitting of the teeth, and occurs only in developing teeth before they erupt from the gums.
17. Mercury (inorganic)	0.002	0.002	Some people who drink water containing inorganic mercury well in excess of the MCL over many years could experience kidney damage.

APPENDIX B TO SUBPART Q OF PART 141.—STANDARD HEALTH EFFECTS LANGUAGE FOR PUBLIC NOTIFICATION—Continued

Contaminant	MCLG [1] mg/L	MCL [2] mg/L	Standard health effects language for public notification
18. Nitrate	10	10	Infants below the age of six months who drink water containing nitrate in excess of the MCL could become seriously ill and, if untreated, may die. Symptoms include shortness of breath and blue baby syndrome.
19. Nitrite	1	1	Infants below the age of six months who drink water containing nitrite in excess of the MCL could become seriously ill and, if untreated, may die. Symptoms include shortness of breath and blue baby syndrome.
20. Total Nitrate and Nitrite	10	10	Infants below the age of six months who drink water containing nitrate and nitrite in excess of the MCL could become seriously ill and, if untreated, may die. Symptoms include shortness of breath and blue baby syndrome.
21. Selenium	0.05	0.05	Selenium is an essential nutrient. However, some people who drink water containing selenium in excess of the MCL over many years could experience hair or fingernail losses, numbness in fingers or toes, or problems with their circulation.
22. Thallium	0.0005	0.002	Some people who drink water containing thallium in excess of the MCL over many years could experience hair loss, changes in their blood, or problems with their kidneys, intestines, or liver.
C. Lead and Copper Rule:			
23. Lead	Zero	TT [12]	Infants and children who drink water containing lead in excess of the action level could experience delays in their physical or mental development. Children could show slight deficits in attention span and learning abilities. Adults who drink this water over many years could develop kidney problems or high blood pressure.
24. Copper	1.3	TT [13]	Copper is an essential nutrient, but some people who drink water containing copper in excess of the action level over a relatively short amount of time could experience gastrointestinal distress. Some people who drink water containing copper in excess of the action level over many years could suffer liver or kidney damage. People with Wilson's Disease should consult their personal doctor. 11D. Synthetic Organic Chemicals (SOCs):
25. 2,4–D	0.07	0.07	Some people who drink water containing the weed killer 2,4–D well in excess of the MCL over many years could experience problems with their kidneys, liver, or adrenal glands.
26. 2,4,5–TP (Silvex)	0.05	0.05	Some people who drink water containing silvex in excess of the MCL over many years could experience liver problems.
27. Alachlor	Zero	0.002	Some people who drink water containing alachlor in excess of the MCL over many years could have problems with their eyes, liver, kidneys, or spleen, or experience anemia, and may have an increased risk of getting cancer.
28. Atrazine	0.003	0.003	Some people who drink water containing atrazine well in excess of the MCL over many years could experience problems with their cardiovascular system or reproductive difficulties.
29. Benzo(a)pyrene (PAHs)	Zero	0.0002	Some people who drink water containing benzo(a)pyrene in excess of the MCL over many years may experience reproductive difficulties and may have an increased risk of getting cancer.
30. Carbofuran	0.04	0.04	Some people who drink water containing carbofuran in excess of the MCL over many years could experience problems with their blood, or nervous or reproductive systems.
31. Chlordane	Zero	0.002	Some people who drink water containing chlordane in excess of the MCL over many years could experience problems with their liver or nervous system, and may have an increased risk of getting cancer.
32. Dalapon	0.2	0.2	Some people who drink water containing dalapon well in excess of the MCL over many years could experience minor kidney changes.
33. Di (2-ethylhexyl) adipate	0.4	0.4	Some people who drink water containing di (2-ethylhexyl) adipate well in excess of the MCL over many years could experience general toxic effects or reproductive difficulties.
34. Di (2-ethylhexyl) phthalate	Zero	0.006	Some people who drink water containing di (2-ethylhexyl) phthalate in excess of the MCL over many years may have problems with their liver, or experience reproductive difficulties, and may have an increased risk of getting cancer.
35. Dibromochloropropane (DBCP).	Zero	0.0002	Some people who drink water containing DBCP in excess of the MCL over many years could experience reproductive difficulties and may have an increased risk of getting cancer.
36. Dinoseb	0.007	0.007	Some people who drink water containing dinoseb well in excess of the MCL over many years could experience reproductive difficulties.
37. Dioxin (2,3,7,8-TCDD)	Zero	3×10^{-8}	Some people who drink water containing dioxin in excess of the MCL over many years could experience reproductive difficulties and may have an increased risk of getting cancer.
38. Diquat	0.02	0.02	Some people who drink water containing diquat in excess of the MCL over many years could get cataracts.

APPENDIX B TO SUBPART Q OF PART 141.—STANDARD HEALTH EFFECTS LANGUAGE FOR PUBLIC NOTIFICATION—Continued

Contaminant	MCLG [1] mg/L	MCL [2] mg/L	Standard health effects language for public notification
39. Endothall	0.1	0.1	Some people who drink water containing endothall in excess of the MCL over many years could experience problems with their stomach or intestines.
40. Endrin	0.002	0.002	Some people who drink water containing endrin in excess of the MCL over many years could experience liver problems.
41. Ethylene dibromide	Zero	0.00005	Some people who drink water containing ethylene dibromide in excess of the MCL over many years could experience problems with their liver, stomach, reproductive system, or kidneys, and may have an increased risk of getting cancer.
42. Glyphosate	0.7	0.7	Some people who drink water containing glyphosate in excess of the MCL over many years could experience problems with their kidneys or reproductive difficulties.
43. Heptachlor	Zero	0.0004	Some people who drink water containing heptachlor in excess of the MCL over many years could experience liver damage and may have an increased risk of getting cancer.
44. Heptachlor epoxide	Zero	0.0002	Some people who drink water containing heptachlor epoxide in excess of the MCL over many years could experience liver damage, and may have an increased risk of getting cancer.
45. Hexachlorobenzene	Zero	0.001	Some people who drink water containing hexachlorobenzene in excess of the MCL over many years could experience problems with their liver or kidneys, or adverse reproductive effects, and may have an increased risk of getting cancer.
46. Hexachlorocyclo-pentadiene	0.05	0.05	Some people who drink water containing hexachlorocyclopentadiene well in excess of the MCL over many years could experience problems with their kidneys or stomach.
47. Lindane	0.0002	0.0002	Some people who drink water containing lindane in excess of the MCL over many years could experience problems with their kidneys or liver.
48. Methoxychlor	0.04	0.04	Some people who drink water containing methoxychlor in excess of the MCL over many years could experience reproductive difficulties.
49. Oxamyl (Vydate)	0.2	0.2	Some people who drink water containing oxamyl in excess of the MCL over many years could experience slight nervous system effects.
50. Pentachlorophenol	Zero	0.001	Some people who drink water containing pentachlorophenol in excess of the MCL over many years could experience problems with their liver or kidneys, and may have an increased risk of getting cancer.
51. Picloram	0.5	0.5	Some people who drink water containing picloram in excess of the MCL over many years could experience problems with their liver.
52. Polychlorinated biphenyls (PCBs).	Zero	0.0005	Some people who drink water containing PCBs in excess of the MCL over many years could experience changes in their skin, problems with their thymus gland, immune deficiencies, or reproductive or nervous system difficulties, and may have an increased risk of getting cancer.
53. Simazine	0.004	0.004	Some people who drink water containing simazine in excess of the MCL over many years could experience problems with their blood.
54. Toxaphene	Zero	0.003	Some people who drink water containing toxaphene in excess of the MCL over many years could have problems with their kidneys, liver, or thyroid, and may have an increased risk of getting cancer. 11E. Volatile Organic Chemicals (VOCs):
55. Benzene	Zero	0.005	Some people who drink water containing benzene in excess of the MCL over many years could experience anemia or a decrease in blood platelets, and may have an increased risk of getting cancer.
56. Carbon tetrachloride	Zero	0.005	Some people who drink water containing carbon tetrachloride in excess of the MCL over many years could experience problems with their liver and may have an increased risk of getting cancer.
57. Chlorobenzene (monochlorobenzene).	0.1	0.1	Some people who drink water containing chlorobenzene in excess of the MCL over many years could experience problems with their liver or kidneys.
58. *o*-Dichlorobenzene	0.6	0.6	Some people who drink water containing o-dichlorobenzene well in excess of the MCL over many years could experience problems with their liver, kidneys, or circulatory systems.
59. *p*-Dichlorobenzene	0.075	0.075	Some people who drink water containing p-dichlorobenzene in excess of the MCL over many years could experience anemia, damage to their liver, kidneys, or spleen, or changes in their blood.
60. 1,2-Dichloroethane	Zero	0.005	Some people who drink water containing 1,2-dichloroethane in excess of the MCL over many years may have an increased risk of getting cancer.
61. 1,1-Dichloroethylene	0.007	0.007	Some people who drink water containing 1,1-dichloroethylene in excess of the MCL over many years could experience problems with their liver.

APPENDIX B TO SUBPART Q OF PART 141.—STANDARD HEALTH EFFECTS LANGUAGE FOR PUBLIC NOTIFICATION—Continued

Contaminant	MCLG [1] mg/L	MCL [2] mg/L	Standard health effects language for public notification
62. *cis*-1,2-Dichloroethylene	0.07	0.07	Some people who drink water containing cis-1,2-dichloroethylene in excess of the MCL over many years could experience problems with their liver.
63. *trans*-1,2-Dichloroethylene	0.1	0.1	Some people who drink water containing trans-1,2-dichloroethylene well in excess of the MCL over many years could experience problems with their liver.
64. Dichloromethane	Zero	0.005	Some people who drink water containing dichloromethane in excess of the MCL over many years could have liver problems and may have an increased risk of getting cancer.
65. 1,2-Dichloropropane	Zero	0.005	Some people who drink water containing 1,2-dichloropropane in excess of the MCL over many years may have an increased risk of getting cancer.
66. Ethylbenzene	0.7	0.7	Some people who drink water containing ethylbenzene well in excess of the MCL over many years could experience problems with their liver or kidneys.
67. Styrene	0.1	0.1	Some people who drink water containing styrene well in excess of the MCL over many years could have problems with their liver, kidneys, or circulatory system.
68. Tetrachloroethylene	Zero	0.005	Some people who drink water containing tetrachloroethylene in excess of the MCL over many years could have problems with their liver, and may have an increased risk of getting cancer.
69. Toluene	1	1	Some people who drink water containing toluene well in excess of the MCL over many years could have problems with their nervous system, kidneys, or liver.
70. 1,2,4-Trichlorobenzene	0.07	0.07	Some people who drink water containing 1,2,4-trichlorobenzene well in excess of the MCL over many years could experience changes in their adrenal glands.
71. 1,1,1-Trichloroethane	0.2	0.2	Some people who drink water containing 1,1,1-trichloroethane in excess of the MCL over many years could experience problems with their liver, nervous system, or circulatory system.
72. 1,1,2-Trichloroethane	0.003	0.005	Some people who drink water containing 1,1,2-trichloroethane well in excess of the MCL over many years could have problems with their liver, kidneys, or immune systems.
73. Trichloroethylene	Zero	0.005	Some people who drink water containing trichloroethylene in excess of the MCL over many years could experience problems with their liver and may have an increased risk of getting cancer.
74. Vinyl chloride	Zero	0.002	Some people who drink water containing vinyl chloride in excess of the MCL over many years may have an increased risk of getting cancer.
75. Xylenes (total)	10	10	Some people who drink water containing xylenes in excess of the MCL over many years could experience damage to their nervous system.
11F. Radioactive Contaminants:			
76. Beta/photon emitters	Zero	4 mrem/yr [14]	Certain minerals are radioactive and may emit forms of radiation known as photons and beta radiation. Some people who drink water containing beta and photon emitters in excess of the MCL over many years may have an increased risk of getting cancer.
77. Alpha emitters	Zero	15 pCi/L [15]	Certain minerals are radioactive and may emit a form of radiation known as alpha radiation. Some people who drink water containing alpha emitters in excess of the MCL over many years may have an increased risk of getting cancer.
78. Combined radium (226 & 228).	Zero	5 pCi/L	Some people who drink water containing radium 226 or 228 in excess of the MCL over many years may have an increased risk of getting cancer.
G. Disinfection Byproducts (DBPs), Byproduct Precursors, and Disinfectant Residuals: Where disinfection is used in the treatment of drinking water, disinfectants combine with organic and inorganic matter present in water to form chemicals called disinfection byproducts (DBPs). EPA sets standards for controlling the levels of disinfectants and DBPs in drinking water, including trihalomethanes (THMs) and haloacetic acids (HAAs): [16]			
79. Total trihalomethanes (TTHMs).	N/A	0.10/ 0.080 [17] [18]	Some people who drink water containing trihalomethanes in excess of the MCL over many years may experience problems with their liver, kidneys, or central nervous system, and may have an increased risk of getting cancer.

APPENDIX B TO SUBPART Q OF PART 141.—STANDARD HEALTH EFFECTS LANGUAGE FOR PUBLIC NOTIFICATION—Continued

Contaminant	MCLG [1] mg/L	MCL [2] mg/L	Standard health effects language for public notification
80. Haloacetic Acids (HAA)	N/A	0.060 [19]	Some people who drink water containing haloacetic acids in excess of the MCL over many years may have an increased risk of getting cancer.
81. Bromate	Zero	0.010	Some people who drink water containing bromate in excess of the MCL over many years may have an increased risk of getting cancer.
82. Chlorite	0.08	1.0	Some infants and young children who drink water containing chlorite in excess of the MCL could experience nervous system effects. Similar effects may occur in fetuses of pregnant women who drink water containing chlorite in excess of the MCL. Some people may experience anemia.
83. Chlorine	4 (MRDLG) [20]	4.0 (MRDL) [21]	Some people who use water containing chlorine well in excess of the MRDL could experience irritating effects to their eyes and nose. Some people who drink water containing chlorine well in excess of the MRDL could experience stomach discomfort.
84. Chloramines	4 (MRDLG)	4.0 (MRDL)	Some people who use water containing chloramines well in excess of the MRDL could experience irritating effects to their eyes and nose. Some people who drink water containing chloramines well in excess of the MRDL could experience stomach discomfort or anemia.
85a. Chlorine dioxide, where any 2 consecutive daily samples taken at the entrance to the distribution system are above the MRDL.	0.8 (MRDLG)	0.8 (MRDL)	Some infants and young children who drink water containing chlorine dioxide in excess of the MRDL could experience nervous system effects. Similar effects may occur in fetuses of pregnant women who drink water containing chlorine dioxide in excess of the MRDL. Some people may experience anemia. *Add for public notification only:* The chlorine dioxide violations reported today are the result of exceedances at the treatment facility only, not within the distribution system which delivers water to consumers. Continued compliance with chlorine dioxide levels within the distribution system minimizes the potential risk of these violations to consumers.
85b. Chlorine dioxide, where one or more distribution system samples are above the MRDL.	0.8 (MRDLG)	0.8 (MRDL)	Some infants and young children who drink water containing chlorine dioxide in excess of the MRDL could experience nervous system effects. Similar effects may occur in fetuses of pregnant women who drink water containing chlorine dioxide in excess of the MRDL. Some people may experience anemia. *Add for public notification only:* The chlorine dioxide violations reported today include exceedances of the EPA standard within the distribution system which delivers water to consumers. Violations of the chlorine dioxide standard within the distribution system may harm human health based on short-term exposures. Certain groups, including fetuses, infants, and young children, may be especially susceptible to nervous system effects from excessive chlorine dioxide exposure.
86. Control of DBP precursors (TOC).	None	TT	Total organic carbon (TOC) has no health effects. However, total organic carbon provides a medium for the formation of disinfection byproducts. These byproducts include trihalomethanes (THMs) and haloacetic acids (HAAs). Drinking water containing these byproducts in excess of the MCL may lead to adverse health effects, liver or kidney problems, or nervous system effects, and may lead to an increased risk of getting cancer.
H. Other Treatment Techniques:			
87. Acrylamide	Zero	TT	Some people who drink water containing high levels of acrylamide over a long period of time could have problems with their nervous system or blood, and may have an increased risk of getting cancer.
88. Epichlorohydrin	Zero	TT	Some people who drink water containing high levels of epichlorohydrin over a long period of time could experience stomach problems, and may have an increased risk of getting cancer.

Appendix B—Endnotes

1. MCLG—Maximum contaminant level goal

2. MCL—Maximum contaminant level

3. For water systems analyzing at least 40 samples per month, no more than 5.0 percent of the monthly samples may be positive for total coliforms. For systems analyzing fewer than 40 samples per month, no more than one sample per month may be positive for total coliforms.

4. There are various regulations that set turbidity standards for different types of systems, including 40 CFR 141.13, the 1989 Surface Water Treatment Rule, and the 1998 Interim Enhanced Surface Water Treatment Rule. The MCL for the monthly turbidity average is 1 NTU; the MCL for the 2-day average is 5 NTU for systems that are required to filter but have not yet installed filtration (40 CFR 141.13).

5. NTU—Nephelometric turbidity unit

6. There are various regulations that set turbidity standards for different types of systems, including 40 CFR 141.13, the 1989 Surface Water Treatment Rule (SWTR), and the 1998 Interim Enhanced Surface Water Treatment Rule (IESWTR). Systems subject to the Surface Water Treatment Rule (both filtered and unfiltered) may not exceed 5 NTU. In addition, in filtered systems, 95 percent of samples each month must not exceed 0.5 NTU in systems using conventional or direct filtration and must not exceed 1 NTU in systems using slow sand or diatomaceous earth filtration or other filtration technologies approved by the primacy agency.

7. TT—Treatment technique

8. There are various regulations that set turbidity standards for different types of

systems, including 40 CFR 141.13, the 1989 Surface Water Treatment Rule (SWTR), and the 1998 Interim Enhanced Surface Water Treatment Rule (IESWTR). For systems subject to the IESWTR (systems serving at least 10,000 people, using surface water or ground water under the direct influence of surface water), that use conventional filtration or direct filtration, after January 1, 2002, the turbidity level of a system's combined filter effluent may not exceed 0.3 NTU in at least 95 percent of monthly measurements, and the turbidity level of a system's combined filter effluent must not exceed 1 NTU at any time. Systems subject to the IESWTR using technologies other than conventional, direct, slow sand, or diatomaceous earth filtration must meet turbidity limits set by the primacy agency.

9. The bacteria detected by heterotrophic plate count (HPC) are not necessarily harmful. HPC is simply an alternative method of determining disinfectant residual levels. The number of such bacteria is an indicator of whether there is enough disinfectant in the distribution system.

10. SWTR and IESWTR treatment technique violations that involve turbidity exceedances may use the health effects language for turbidity instead.

11. The bacteria detected by heterotrophic plate count (HPC) are not necessarily harmful. HPC is simply an alternative method of determining disinfectant residual levels. The number of such bacteria is an indicator of whether there is enough disinfectant in the distribution system.

12. Millions fibers per liter.

13. Action Level = 0.015 mg/L

14. Action Level = 1.3 mg/L

15. Millirems per years

16. Picocuries per liter

17. Surface water systems and ground water systems under the direct influence of surface water are regulated under Subpart H of 40 CFR 141. Supbart H community and non-transient non-community systems serving ≥ 10,000 must comply with DBP MCLs and disinfectant maximum residual disinfectant levels (MRDLs) beginning January 1, 2002. All other community and non-transient noncommunity systems must meet the MCLs and MRDLs beginning January 1, 2004. Subpart H transient non-community systems serving 10,000 or more persons and using chlorine dioxide as a disinfectant or oxidant must comply with the chlorine dioxide MRDL beginning January 1, 2002. Subpart H transient non-community systems serving fewer than 10,000 persons and systems using only ground water not under the direct influence of surface water and using chlorine dioxide as a disinfectant or oxidant must comply with the chlorine dioxide MRDL beginning January 1, 2004.

18. The MCL of 0.10 mg/l for TTHMs is in effect until January 1, 2002 for Subpart H community water systems serving 10,000 or more. This MCL is in effect until January 1, 2004 for community water systems with a population of 10,000 or more using only ground water not under the direct influence of surface water. After these deadlines, the MCL will be 0.080 mg/l. On January 1, 2004, all systems serving less than 10,000 will have to comply with the new MCL as well.

19. The MCL for total trihalomethanes is the sum of the concentrations of the individual trihalomethanes.

20. The MCL for haloacetic acids is the sum of the concentrations of the individual haloacetic acids.

21. MRDLG—Maximum residual disinfectant level goal.

22. MRDL—Maximum residual disinfectant level.

Appendix C to Subpart Q of Part 141—List of Acronyms Used in Public Notification Regulation

CCR Consumer Confidence Report
CWS Community Water System
DBP Disinfection Byproduct
EPA Environmental Protection Agency
HPC Heterotrophic Plate Count
IESWTR Interim Enhanced Surface Water Treatment Rule
IOC Inorganic Chemical
LCR Lead and Copper Rule
MCL Maximum Contaminant Level
MCLG Maximum Contaminant Level Goal
MRDL Maximum Residual Disinfectant Level
MRDLG Maximum Residual Disinfectant Level Goal
NCWS Non-Community Water System
NPDWR National Primary Drinking Water Regulation
NTNCWS Non-Transient Non-Community Water System
NTU Nephelometric Turbidity Unit
OGWDW Office of Ground Water and Drinking Water
OW Office of Water
PN Public Notification
PWS Public Water System
SDWA Safe Drinking Water Act
SMCL Secondary Maximum Contaminant Level
SOC Synthetic Organic Chemical
SWTR Surface Water Treatment Rule
TCR Total Coliform Rule
TT Treatment Technique
TWS Transient Non-Community Water System
VOC Volatile Organic Chemical

PART 142—[AMENDED]

1. The authority citation for Part 142 continues to read as follows:

Authority: 42 U.S.C. 300f, 300g–1, 300g–2, 300 g–3, 300g–4, 300 g–5, 300 g–6, 300 j–4, 300 j–9, and 300 j–11.

2. Section 142.10 is amended by revising paragraph (b)(6)(v) to read as follows:

§ 142.10 Requirements for a determination of primary enforcement responsibility.

(b) * * *

(6) * * *

(v) Authority to require public water systems to give public notice that is no less stringent than the EPA requirements in Subpart Q of Part 141 of this chapter and § 142.16(a).

3. Section 142.14 is amended by redesignating paragraph (f) as (g) and adding a new (f), to read as follows:

§ 142.14 Records kept by States.

* * * * *

(f) Public notification records under Subpart Q of Part 141 of this chapter received from public water systems (including certifications of compliance and copies of public notices) and any state determinations establishing alternative public notification requirements for the water systems must be retained for three years.

* * * * *

4. Section 142.15 is amended by revising paragraph (a)(1), to read as follows:

§ 142.15 Reports by States.

* * * * *

(a) * * *

(1) New violations by public water systems in the State during the previous quarter of State regulations adopted to incorporate the requirements of national primary drinking water regulations, including violations of the public notification requirements under Subpart Q of Part 141 of this chapter;

* * * * *

5. Section 142.16 is amended by revising paragraph (a), to read as follows:

§ 142.16 Special primacy requirements.

(a) *State public notification requirements.*

(1) Each State that has primary enforcement authority under this part must submit complete and final requests for approval of program revisions to adopt the requirements of Subpart Q of Part 141 of this chapter, using the procedures in § 142.12(b) through (d). At its option, a State may, by rule, and after notice and comment, establish alternative public notification requirements with respect to the form and content of the public notice required under Subpart Q of Part 141 of this chapter. The alternative requirements must provide the same type and amount of information required under Subpart Q and must meet the primacy requirements under § 142.10.

(2) As part of the revised primacy program, a State must also establish enforceable requirements and procedures when the State adds to or changes the requirements under:

(i) *Table 1 to 40 CFR 141.201(a)(Item (3)(v))*—To require public water systems to give a public notice for violations or situations other than those listed in Appendix A of Subpart Q of Part 141 of this chapter;

(ii) *40 CFR 141.201(c)(2)*—To allow public water systems, under the specific circumstances listed in § 141.201(c)(2),

to limit the distribution of the public notice to persons served by the portion of the distribution system that is out of compliance;

(iii) *Table 1 of 40 CFR 141.202(a) (Items (5), (6), and (8))*—To require public water systems to give a Tier 1 public notice (rather than a Tier 2 or Tier 3 notice) for violations or situations listed in Appendix A of Subpart Q of Part 141 of this chapter;

(iv) *40 CFR 141.202(b)(3)*—To require public water systems to comply with additional Tier 1 public notification requirements set by the State subsequent to the initial 24-hour Tier 1 notice, as a result of their consultation with the State required under §§ 141.202(b)(2);

(v) *40 CFR 141.202(c), 141.203(c) and 141.204(c)*—To require a different form and manner of delivery for Tier 1, 2 and 3 public notices.

(vi) *Table 1 to 40 CFR 141.203(a) (Item (2))*—To require the public water systems to provide a Tier 2 public notice (rather than Tier (3)) for monitoring or testing procedure violations specified by the State;

(vii) *40 CFR 141.203(b)(1)*—To grant public water systems an extension up to three months for distributing the Tier 2 public notice in appropriate circumstances (other than those specifically excluded in the rule);

(viii) *40 CFR 141.203(b)(2)*—To grant a different repeat notice frequency for the Tier 2 public notice in appropriate circumstances (other than those specifically excluded in the rule), but no less frequently than once per year;

(ix) *40 CFR 141.203(b)(3)*—To respond within 24 hours to a request for consultation by the public water system to determine whether a Tier 1 (rather than a Tier 2) notice is required for a turbidity MCL violation under § 141.13(b) or a SWTR/IESWTR TT violation due to a single exceedance of the maximum allowable turbidity limit;

(x) *40 CFR 141.205(c)*—To determine the specific multilingual requirement for a public water system, including defining ''large proportion of non-English-speaking consumers.''

* * * * *

§ 142.16 [Amended]

6. Section 142.16(e) introductory text is amended by removing ''§ 141.32''.

PART 143—[AMENDED]

1. The authority citation for Part 143 continues to read as follows:

Authority: 42 U.S.C. 300f *et seq.*

§ 143.5 [Removed]

2. Part 143 is amended by removing § 143.5.

[FR Doc. 00–9534 Filed 5–3–00; 8:45 am]

BILLING CODE 6560–50–P

Federal Register

Thursday,
May 4, 2000

Part III

Department of the Interior

National Park Service

Standard Concession Contract; Revision; Notice

DEPARTMENT OF THE INTERIOR

National Park Service

Standard Concession Contract; Revision

ACTION: Final Revision of the National Park Service Standard Concession Contract.

SUMMARY: The National Park Service (NPS) authorizes certain business entities to operate concessions in areas of the national park system. The agreements embodying these authorizations are concession contracts (and, previously, concession permits) that incorporate NPS terms and conditions established by law and prudent contract administration. In 1998, Public Law 105–391 (the 1998 Act) was enacted which in many significant ways affects the content of concession contracts to be entered into after its effective date. Accordingly, NPS amends its existing standard concession contract to conform to the requirements of the 1998 Act and to otherwise make improvements to the standard form.

NPS, although not required to do so by law, sought by publication in the **Federal Register** on September 3, 1999, public comments on the proposed standard concession contract to assist it in the development of a final version as a matter of public policy. Similarly, NPS sought public comment on the proposed exhibits to the contract and amended environmental language by publication in the **Federal Register** on February 23, 2000. NPS, after consideration of public comments, adopts a new standard concession contract. NPS points out that the new standard concession contract is only an internal guideline for the form of concession contracts. The form may be changed by the Director in his discretion to accommodate the circumstances of any particular contracting situation or otherwise as long as the contract form used is consistent with the 1998 Act and 36 CFR part 51.

EFFECTIVE DATE: June 5, 2000.

FOR FURTHER INFORMATION CONTACT: Cindy Orlando, Concession Program Manager, National Park Service, 1849 ''C'' Street, NW., Washington, DC 20240 (202/565–1219).

SUPPLEMENTARY INFORMATION: The 1998 Act, among other matters, amended the statutory policies and procedures under which NPS operates its concession program. The new law requires adoption of new regulations governing the award, content and management of concession contracts. On June 30, 1999, NPS published for public comment proposed regulations implementing the new law. The final new regulations were published in the **Federal Register** on April 17, 2000. The final standard concession contract set forth in this notice reflects the requirements of the 1998 Act and the requirements of the amended 36 CFR part 51. It also reflects a variety of improvements NPS wishes to make to its standard concession contract, including a new organizational structure for the sake of clarity.

Public Comments

Fifteen public comments were received in response to the public notice, all but one from existing concessioners or their attorneys. For the most part, the comments were negative, some going so far as to state that ''no one'' will submit proposals under the terms of the new concession contract. NPS disagrees. It believes that the new contract form is appropriate in light of the 1998 Act and proper administration of the NPS concessions program. NPS also believes that it will have no difficulty attracting qualified business to submit proposals for new concession contracts. NPS concession businesses are profitable and enjoyable. NPS considers that many qualified companies will seek to become concessioners under the terms of the 1998 Act, the amended 36 CFR Part 51 and the new standard concession contract.

Several commenters philosophically objected to the special terms that NPS concession contracts contain, terms that are required in order to give NPS the ability to properly preserve and protect the resources of areas of the national park system and their visitors. These include the ability to describe and modify the nature of concessioners' operations from time to time and the ability to terminate the contract when necessary for resource and visitor protection. NPS appreciates that these types of authorities are not typical in commercial leasing or contracting arrangements. However, they are essential to achieving the NPS mission of protecting and preserving park areas and their visitors.

NPS points out that the provisions objected to for the most part are not new provisions but have been successfully implemented over many years in a cooperative relationship with concessioners that share the goals of preservation and protection of park areas and visitors. A concession contract is a special form of government contract that requires the contractor to accept terms and conditions necessary to achieve these goals. NPS does not expect every businessperson to be willing to accept these terms and conditions. However, NPS considers that, as in the past, it will be able to attract qualified businesspersons, committed to the objectives of park area protection, to become NPS concessioners.

Another general comment was to the effect that the NPS standard contract is a ''contract of adhesion,'' i.e., a prospective concessioner is not given an opportunity to negotiate the terms of a contract. NPS disagrees. If a prospective concessioner seeks authorization to operate within the park, he must agree to the conditions placed on such operation by the federal agency charged with protecting and preserving the national park resources.

Several comments objected to including contract provisions by reference to 36 CFR part 51. The leasehold surrender interest provisions of 36 CFR part 51 were cited by reference to protect against inadvertent changes to the rules by individual contracts, to shorten the contract, and to make the contract easier to understand. However, in response to this comment, and to ensure clarity, NPS has included as Exhibit A to the final contract relevant leasehold surrender provisions contained in 36 CFR part 51 as express terms of the contract rather than incorporating these terms by reference to 36 CFR part 51.

A number of comments expressly incorporated by reference objections the commenters had made on the proposed amendment to 36 CFR part 51. Those comments are not addressed here unless necessary in relation to the new standard contract. The preamble to the final 36 CFR part 51 addresses public comments on the proposed regulatory amendment.

A concessioner organization with some 150 existing concessioner members made extensive comments on the proposed concession contract. Reference in the analysis to comments from the ''general concessioner organization'' refers to this incumbent concessioner organization and to any individual concessioners that endorsed the comments of the general concessioner organization.

An environmental consulting firm suggested inclusion of references to environmental management matters in a number of places in the contract. NPS considers these suggested changes to be redundant for the most part, as the environmental protection provisions of the contract are comprehensive. A further discussion of these issues is contained in section 6.

NPS has made several editorial and conforming changes to the proposed

contract form in addition to the changes discussed below. It has also re-labeled the exhibits to the contract to reflect their final sequence in the contract and defined ''days'' as used in the contract as calendar days. Two new general provisions have been added to section 19, a standard non-waiver clause and a reference to 28 U.S.C. 2514 with respect to claims arising from the contract. In addition, for the sake of clarity, the final contract includes the definition of ''subconcessioner'' as set forth in 36 CFR part 51.

Section-by-Section Analysis of Comments and Changes

The following discusses significant comments made on the several sections of the proposed standard contract. Where no discussion is included, no significant comments were received or comments received primarily were concerned with related provisions of the proposed concession regulations.

Opening Paragraph

A commenter objected to the description of the parties to the contract on the grounds that it suggests that all partners of a partnership must execute the contract. This is not the case. However, a clarifying change has been made in the final contract.

Purpose and Authorities

Section 1. Term of Contract

A commenter objected to the use of the word approximately in this provision. It has been deleted from the final contract. It also objected to the fact that the contract term may be shortened if the concessioner does not complete required improvements under the terms of the contract for reasons beyond its control. This provision has been retained as a necessary and prudent contract term. However, a sentence has been added expressly referencing the authority of NPS to extend the completion date for reasons beyond the control of the concessioner.

Section 2. Definitions

2(a). Applicable Laws

Several commenters objected to this definition as being overly broad because of possible changes in law. NPS considers this concern to be unfounded. Changes in law frequently have applicability to existing government contracts. Furthermore, this concept is not new and has been standard in NPS concession contracts for many years.

Section 2(b). Areas

Section 2(c). Capital Improvement

Section 2(d). Concession Facilities

Several commenters suggested that the contract should spell out in more detail the concessioner's responsibility for maintenance of Concession Facilities. The Maintenance Plan that is attached to each NPS concession contract describes in detail the maintenance responsibilities of the concessioner.

Section 2(e). Director

Section 2(f). Exhibit or Exhibits

Section 2(g). Gross Receipts

The general concessioner organization objected to the definition of gross receipts on several grounds, stating, among other matters, that NPS should have no ''right'' to receive a franchise fee on the activities of the concessioner outside of park areas. However, the definition of gross receipts refers to receipts generated ''pursuant to the rights granted by this contract.'' It is entirely appropriate that NPS seek a franchise fee in the form of a percentage of the concessioner's gross receipts for all receipts generated pursuant to the rights granted by the concession contract.

The commenter requested a change to exclusion (ix), renumbered (9), to clarify that payments from leasehold surrender interest are excluded from gross receipts. No change has been made because the definition, as proposed, does not include the concept that payments of leasehold surrender interest are included in gross receipts.

Item (x), renumbered (10), has not been changed as requested by the commenter. The commenter misunderstands it. The provision applies to taxes that are added to approved sale prices that are collected by the concessioner and remitted to the taxing authority.

Most of the other technical suggestions made by the commenter have been considered and rejected as inappropriate. Particularly, the terms of the definition preclude the concern that gross receipts include payments to the concessioner for work the concessioner may perform for NPS. Any such payments would necessarily be under the terms of a procurement contract and not a concession contract.

Another commenter requested that the definition of gross receipts be changed so as to state that the franchise fee for outfitters and guides is calculated only on activities conducted within park area boundaries pursuant to the rights granted by the contract. NPS has not made this change as it considers that it has a right and an obligation to collect franchise fees on all revenues of a concessioner derived from the rights granted by the contract regardless of where the activities occur. The commenter, however, argues that some NPS field managers attempt to calculate franchise fees based on all receipts of a concessioner, no matter how derived. If this is true, it is a management error, not a matter that requires changes to the standard contract.

Section 2(h). Gross Receipts of Subconcessioners

The general concessioner organization states that the gross receipts of subconcessioners should have the same exclusions as concessioner gross receipts. NPS has changed this section in the final contract to make clear that the gross receipts of subconcessioners reported to the concessioner are not subject to exclusions but that the general exclusions applicable to the concessioners' gross receipts extend to its gross receipts generated by the subconcessioner.

Section 2(i). Leasehold Surrender Interest

Section 2(j.) Leasehold Surrender Interest Value

Section 2(k). Major Rehabilitation

Section 2(l). Possessory Interest

Section 2(m). Real Property Improvements

Section 2(n). Superintendent

Section 2(o). Visitor Services

A commenter states that the words ''Section 3(a)'' should be removed so as to include services provided by the concessioner no matter where referenced in the contract. However, Section 3(a) is the only place in the standard contract that describes visitor services.

NPS has also added a new definition, (f), to this section to clarify that the term ''days'' used throughout the contract refers to calendar days. This section has been re-lettered accordingly.

Section 3. Services and Operations

Section 3(a). Required and Authorized Visitor Services

A commenter suggested that the inclusion of the instruction under this section to the effect that a concessioner may only provide unspecified visitor services ''incidental'' to the specified visitor services will stifle innovative concession programs and the concessioner's ability to meet the expectations of the public. NPS

disagrees, and notes that this instruction has been standard in NPS concession contracts for many years. In addition, concession contracts may be amended by agreement of the parties to add additional services in certain circumstances. NPS, in the amendment to 36 CFR part 51, has addressed the scope of additional services that may be added to a concession contract by contract amendment in response to public comments. In light of 36 CFR part 51, the sentence regarding incidental services has been deleted in the final contract.

Section 3(b). Operation and Quality of Operation

Several commenters objected to this section on the grounds that it is too vague, i.e., operations must be conducted to the satisfaction of NPS. NPS disagrees. In the first instance, it notes that all existing NPS concession contracts contain this provision in one form or another, including the contracts of all of the members of the general concessioner organization. NPS is unaware of any litigation at least since 1965 based on the alleged vagueness of this term. A comment also suggests that the phrase ''except as may be provided by the Director'' be added to the second sentence of this provision. NPS has made a change to reflect this comment.

Section 3(c). Operating Plan

Several commenters objected to this provision as it gives the Director authority to amend the terms and conditions of a contract's Operating Plan. However, NPS notes that this circumstance is required by the obligations of NPS under law to ensure that a concessioner's operations are not detrimental to the resources of the area or to park visitors.

The concept that NPS and the concessioner could agree ten or twenty years in advance as to the details of the concessioner's operations in the future is untenable. For example, circumstances may occur where, in an effort to protect the safety of park visitors, NPS needs to limit the hours that a hotel or restaurant may be open. If NPS had agreed in an Operating Plan that a hotel or restaurant would be open certain hours, and any change in the Operating Plan was subject to agreement by the concessioner, NPS could be effectively precluded from adequately and appropriately protecting park visitors to reflect the changed circumstances.

Accordingly, the Operating Plan is necessarily subject to change by NPS so that it may carry out its responsibilities under law for the proper management of park areas. However, the provision expressly states that changes may not be inconsistent with the terms and conditions of the main body of the contract. NPS notes that this concept is contained in the prior NPS standard concession contract. It is not a new provision. NPS has modified this provision in the final contract, in response to comments, to make clear that any changes to an operating plan must not only be consistent with the terms of the main body of the contract but must also be reasonable and in furtherance of the purposes of the contract.

Section 3(d). Merchandise and Services

Section 3(d)(1)

The general concessioner organization states that this provision is too broad. However, this same (or similar) provision is contained in all existing concession contracts, including the contracts of all of the members of the organization. NPS does not consider it to be too broad; rather, it provides the NPS the ability to carry out its responsibilities under law for the proper management of park areas.

Section 3(d)(2)

A commenter objected to this provision on the grounds that it is too broad, suggesting that it applies to confirmation of reservations and other day-to-day activities of a concessioner. In response, NPS has included the word ''promotional'' to modify ''material'' in the final contract. As requested by the general concessioner organization, the phrase ''in connection with the services provided under the Contract'' has been included in the final contract.

Section 3(d)(3)

The general concessioner organization objected to the term ''all'' as contained in this section. NPS has deleted the word in the final contract.

Section 3(e). Rates

The general concessioner organization requests that the standard contract contain provisions that allow the concessioner pricing flexibility without gaining the approval of NPS. NPS does not generally include in concession contracts rate approval provisions except by way of reference to NPS rate approval guidelines. However, the NPS rate approval guidelines do provide for pricing flexibility without NPS approval in certain circumstances.

Section 3(f). Impartiality as to Rates and Services

NPS has added the phrase ''subject to Section (f)(2) and (f)(3) below'' to this provision as requested by the general concessioner organization. It also notes that Exhibit C was published for public comment on February 23, 2000. It has also changed Section 3(e)(2) to make clear that any modification of a pricing policy by NPS will be in the course of the general rate approval program.

Section 4. Concessioner Personnel

Section 4(a)(1)

Section 4(a)(2)

The general concessioner organization and others objected to this section on the grounds that Exhibit C may be unlawful as a result of a judicial decision. The Exhibit C included in the standard concession contract meets all legal requirements.

Section 4(a)(3)

Section 4(a)(4)

Several commenters objected to this section as being too burdensome. NPS has limited its application in the final contract to persons to whom a job has been offered. It has not deleted the word ''appropriate'' as requested by one commenter. The word indicates that the level of effort regarding background checks is to be commensurate with the circumstances.

Section 4(a)(5)

Several commenters objected to this section on the grounds that it is impracticable to achieve. It has been deleted from the final contract.

Section 4(a)(6)

Section 4(a)(7)

The general concessioner organization objected to this section on the grounds that it may require a concessioner to fire an employee. That is correct. It may be necessary to for a concessioner to fire an employee, e.g., an employee that is stealing from guestrooms, in order to correct the situation. However, the word ''fully'' has been deleted in the final contract as unnecessary.

Section 4(a)(8)

Several commenters objected to the requirement that concessioners maintain a drug free workplace to the ''greatest extent possible.'' NPS, however, considers that most concessioners and the American public share this goal.

Section 4(a)(9)

Section 4(a)(10)

In response to a comment by the general concessioner organization, NPS has changed this section in the final contract to make clear that it is

operative only when an employee is found to be in violation of controlled substance laws.

Section 4(b). Employee Housing

NPS has changed this section, in response to comments, to limit it to the reasonableness of rates a concessioner charges employees for housing. It has also changed the requirements for employee recreational activities in response to comments.

Section 5. Legal, Regulatory and Policy Compliance

Section 5(a)

The general concessioner organization objected to this section ''if it purports to give the government the right to renege on vested contract rights.'' NPS considers that the section is appropriate and in accordance with existing law regarding the rights of the Congress or an executive agency to amend statutes or regulations promulgated under statutes. NPS does not consider that this section gives NPS the ability to alter vested contract rights.

Section 5(b)

The existing concessioner organization suggested that this section be changed to make clear that it applies to violations of law by the concessioner. NPS has made a change in the final contract in response to this comment.

Section 6. Environmental and Cultural Protection

On February 23, 2000, NPS published a revised proposed version of this section (and minor modifications to related sections) for public comment. Thirteen public comments were received and are responded to as follows (except for comments that were repetitive of comments received earlier on the proposed concession contract and regulations).

1. Addition of a New ''Whereas Clause''

One comment suggested that this introductory clause is superfluous. NPS disagrees. The clause sets forth an understanding of the environmental objectives of the contract. It is included in the final contract.

2. Modification of the Definition of ''Applicable Laws''

No comments discussed this definition except as a reiteration of earlier comments.

3. Addition of a Definition of ''Best Management Practices''

The general concessioner organization objected to the concept of ''Best Management Practices'' to the extent that implementation of BMPs as defined would not provide the concessioner a financial return. NPS considers that in many instances the implementation of BMP's will provide a specific return on investment. In other circumstances, NPS considers that investment in BMPs is likely to enhance the quality of the concessioner's operations and, therefore, indirectly provide financial return.

Another commenter stated that it considers the definition to be vague. NPS does not consider this to be the case. The concept of BMPs is not new; it is well known in many commercial settings. The commenter also asked several specific questions regarding implementation of BMPs. However, the applicability of the BMP concept to particular circumstances cannot be done in the abstract. NPS does note, however that the BMP implementation is required only to the extent reasonable in light of the particular circumstances of the contract.

Another commenter suggested a change to the definition to the effect that BMPs are practices not required by law or are used in the absence of regulatory requirements. NPS does not consider this definition to be accurate.

The definition of BMPs as proposed by NPS is contained in the final contract.

4. Proposed Change to Section 5

A comment suggested that requiring notice of violation of environmental laws and taking corrective action is ambiguous and burdensome. NPS does not consider either to be the case. The provision is included in the final contract.

5. Proposed Changes to Section 6

Section 6(a). Environmental Management Objectives. A comment suggested that NPS adopt a corresponding obligation to incorporate BMPs in its activities. This is being done administratively in the form of new environmental management policies and practices being developed for management of the national park system.

Section 6(b). Environmental Management Program. A comment questioned how NPS intends to take into account the costs associated with the development of an Environmental Management Program by NPS. NPS considers that the costs of environmental management activities are costs of doing business by all commercial entities that engage in activities that may affect the environment. NPS does not consider that associated costs for these purposes require any more consideration by NPS than a concessioner's other costs, e.g., insurance, maintenance, personnel, etc.

A comment suggested that this subsection should be amended to allow for other methods of measuring environmental performance. NPS, however, considers that the identification of specific goals and targets is the best means to achieve the purposes of the Environmental Management Program.

A commenter suggested that the goals for the Environmental Management Program should be established by NPS rather than the concessioner and that they must meet minimums set by NPS. This, however, is not the intention of NPS. The plan is to be developed by the concessioner to meet the objectives set forth in Section 6(a).

Several comments objected to the term ''environmental audits'' as used in this section as having unintended legal implications. An environmental consulting firm suggested changing the term to environmental ''self-assessments.'' This change has been made in the final provision.

The environmental consulting firm also suggested that the provision require environmental outreach programs to be conducted by the concessioner. NPS considers this to be an appropriate objective but believes that it should be achieved through encouragement rather than by contractual obligations. The same is true with the comment's suggestion for concessioner employee award programs for exceptional environmental performance.

Section 6(c). Environmental Performance Measures. A commenter suggested that a new provision be added to this section requiring the concessioner to comply with the NPS environmental audit program. This comment misunderstands the nature of this program.

Section 6(d). Environmental Data, Reports, Notifications, and Approvals. A commenter suggested that the responsibility for notifications of discharges should be limited to discharges on lands assigned to the concessioner. NPS disagrees. Discharges anywhere in the vicinity of the park area are of concern to NPS.

The same commenter suggested that a concessioner should not have to submit private communications with counsel to NPS. However, section (d)(5) does not state such a requirement.

A comment suggested that the term ''waste stream'' is vague. NPS disagrees and notes that the types of waste a concession operation will generate will vary from park to park. No other

comments suggested that the term was vague.

The same comment suggested that section (d)(3) may require notice of any type of waste, not just hazardous substances. However, the section only applies to waste that is subject to regulation under applicable law.

A comment suggested that notifications be protected against public disclosure. Usual public availability rules (under the Freedom of Information Act) will apply to notifications received by NPS.

A comment suggested that the requirement for a concessioner to give NPS notice of violations may be inconsistent with laws that give States environmental enforcement responsibilities in certain areas. The NPS requirement is not inconsistent with these laws. NPS has a right as owner of the property to be made aware of violations of law by a concessioner, irrespective of the law's enforcement authority.

A comment stated that requiring notice of any ''threatened'' notice of violation is too broad. NPS has changed this section to make clear that it applies only to written communication from appropriate authorities.

Section 6(f). Corrective Action. A comment, referring to comments on the initial proposed section 6, requested the deletion of the word ''clean up'' on the grounds that only clean up required by law or specific guidelines incorporated into the contract should be allowed. NPS disagrees. NPS has the right, as the owner of the property, to require concessioners to clean up in the event of environmental accidents. As to guidelines for clean up, they will be dealt with as necessary in operation and maintenance plans and NPS policies. The comment also requested a clarification that this section does not apply to the removal of building materials already incorporated into structures. This may generally be the case, but, if required by Applicable Laws, such removal must be undertaken.

Several comments suggested that it is unclear that this section is intended to be applicable only to violations of Applicable Laws. NPS considers that the section is clear that this is the case. Another comment suggests that the phrase ''response actions necessary to remediate the release is vague.'' NPS disagrees and notes that only two duplicative comments made this point.

This section was incorrectly numbered and is now subsection (e) in the final contract.

Section 6(g). Indemnification and Cost Recovery for Concession Environmental Activities. A comment suggested that subsection (g)(2) be amended to clarify that NPS orders for environmental clean up or corrective action may not be inconsistent with requirements of enforcement authorities. NPS agrees and has made a clarification to this effect.

A comment suggested that the indemnification clause of this section should be mutual. NPS, however, even if this were appropriate, does not have legal authority to enter into indemnification provisions. The same comment suggested that the indemnification clause should make clear that the indemnification does not extend to losses caused by the United States. NPS considers that the clause is clear in this respect. The comment also states that costs to be assessed must be reasonable. NPS considers that this is implicit in the provisions. Finally, the comment suggests that the provision should include a clause to the effect that it does not foreclose the concessioner's right to collect costs from a responsible third party. NPS has included such a provision in the final contract.

7. Adding a New Subsection to Section (a)(3)

No express comments were received on this change. It has been included in the final contract.

8. Amendment of Proposed Section 15(b)

No express comments were received on this section. It has been added to the final contract.

9. Amending Section 16 of the Proposed Contract

No express comments were received in response to this proposed change.

Section 7. Interpretation of Area Resources

Section 7(a)

The general concessioner organization objected to this section as being too vague. It has been modified in the final contract to address the concerns of the commenter.

Section 7(c)

This section has been deleted as unnecessary in the final contract.

Section 8. Concession Facilities Used in Operations by the Concessioner

Section 8(a). Assignment of Concession Facilities

Several commenters objected to this section on the grounds that it permits NPS to assign additional lands or buildings to the concessioner without its consent. The section, however, does not say this. Adding additional concession facilities to the concessioner's land assignment would require mutual agreement.

Section 8(b). Concession Facilities Withdrawals

The general concessioner organization objected to this section on the same grounds it objected to Section 8(a). However, Section 8(b) is different. It permits NPS to withdraw land assignments without the agreement of the concessioner in limited circumstances, *i.e.,* that withdrawal is necessary for the enhancement or protection of park area resources or visitor protection and enjoyment, the operations utilizing the land have been terminated, or the land is no longer necessary for the concession operation.

NPS notes that this provision is unchanged from the prior standard contract with respect to resource and visitor concerns. The right to withdraw assignment in these circumstances is necessary in order to carry out NPS's responsibilities for management of park areas. However, in response to the comment, NPS has deleted the word ''enhancing'' in the final contract. NPS has not deleted the right to withdraw land when it is no longer necessary for the purposes of the concessioner's operations.

Commenters objected to this right; however, it is necessary to permit NPS to carry out its statutory responsibility to only permit ''necessary and appropriate'' concession facilities and activities on parklands. Circumstances change over time so that land assigned to a concessioner as ''necessary'' may cease to be necessary at a later date.

However, NPS, in response to comments, has included in Section 8(c) the provision that the concessioner may terminate the concession contract in the event of permanent land assignment withdrawals by the Director which the concessioner considers are essential for the concessioner to provide the visitor services required by the contract.

Section 8(c). Effect of Withdrawal

The general concessioner organization requested that the word ''partial'' be included before the word ''termination'' in the first sentence. However, the commenter apparently misunderstands this section. NPS would be obliged to pay the concessioner for any leasehold surrender interest it may have in any permanently withdrawn capital improvement. The organization also asked that provisions be included in the contract for payment to the concessioner

for any personal property associated with withdrawn Concession Facilities.

NPS does not consider this to be appropriate. Except in special circumstances, personal property is owned by the concessioner and may be disposed of as the concessioner sees fit.

This section is unchanged in concept from the current standard concession contract.

Section 8(d). Right of Entry

The general concessioner organization objects to this section on the grounds that it is overbroad. NPS considers the provision necessary to properly carry out its responsibilities for administration of the park area. It also notes that the United States is the owner of all Concession Facilities within the boundaries of the park area.

Section 8(e). Personal Property

The general concessioner organization and others objected to this section on the grounds discussed under 8(c) and also on the grounds that this section gives NPS too much authority to withdraw improvements. However, the section by its terms only applies to personal property, not real property improvements.

Section 8(f). Condition of Concession Facilities

The general concessioner organization objects to this section on the grounds that a concessioner should not be responsible for deficiencies in a building assigned to it by the government.

However, the responsibility for maintenance of government assigned property is discussed in Section 10 of the contract. The prospective concessioner should take steps to be aware of the condition of the facilities to be assigned to it prior to submitting a proposal for a contract. As discussed under section 8(a) above, the concessioner cannot be assigned additional lands or buildings under the contract without the concessioner's consent. NPS, in these circumstances, considers this provision to be appropriate.

Section 8(g). Utilities Provided by the Director

The general concessioner organization objected to this section, stating that it should be more specific about what utilities may be provided by NPS and at what cost. NPS has not made these changes as it would be difficult to describe all possible types of utilities that may be applicable to the circumstances of particular park areas. NPS also notes that it cannot commit to make utilities available to a concessioner, as NPS cannot predict to what extent it will have funds available to construct and operate utilities. This section has been changed to provide that rates for utilities shall be established in accordance with applicable laws. NPS is not in a position to establish prospectively by concession contract the rates of utility services that a concessioner may wish to purchase over the term of a concession contract.

Section 8(h). Utilities Provided by the Concessioner

The general concessioner organization objected to this section on the grounds that a concessioner should have a right to obtain utilities from a third party without the consent of NPS and to grant utility companies access to park property without the consent of NPS. These suggestions manifestly conflict with the responsibilities of NPS regarding protection of park areas.

Section 8(h)(1)

The general concessioner organization objects to this section on the grounds that it requires a concessioner to purchase water rights and turn them over to NPS. The section, however, does not say this. Rather, it states that a concessioner shall acquire necessary water rights through applicable State procedures and assign any rights obtained to NPS. The section does not require purchase of existing water rights by the concessioner. This section has been in NPS concession contracts for many years.

Section 8(h)(2)

The general concessioner organization objected to this section on grounds that it is unfair that the concessioner must provide utilities to the Director at cost. NPS does not consider it good business to authorize a concessioner to install utilities in a park area and make a profit on the utilities when provided to the government. This section has been in NPS concession contracts for many years.

Section 8(h)(3)

This section refers to appliances and machinery installed in connection with utility systems. NPS does not believe these terms to be ambiguous. However, the general concessioner organization objected to this section on the grounds that it is ambiguous. NPS has not changed this section in the final contract as NPS believes that it is not vague or ambiguous. This section has not been materially altered from previous versions of the standard contract.

Section 9. Construction or Installation of Real Property Improvements

Section 9(a). Construction of Real Property Improvements

A comment suggested that this section should make clear that it only applies to construction on government property. NPS considers that the text of this section makes this clear.

Section 9(b). Removal of Real Property Improvements

The general concessioner organization objected to this section on the grounds that NPS, not the concessioner, owns salvage from demolished Capital Improvements. NPS has changed this section in the final rule in response to this comment.

The organization also objects to being required to restore land it occupies during a concession contract to a natural condition. NPS disagrees. Land disturbed for the purposes of a concession operation should be subject to restoration by the concessioner.

Section 9(c). Leasehold Surrender Interest

Section 9(d). Concession Facilities Improvement Program

Section 9(d)(1)

The general concessioner organization suggests that this section be changed to reference the Department of Labor's CPI–U Index. NPS has made this change in the final contract. The organization also requests that a ceiling on improvement costs be included. NPS has not accepted this suggestion. A concessioner is able to make its own cost estimates in advance of contract award.

Section 9(d)(2)

Section 9(d)(3)

The general concessioner organization argues that this section is too vague. NPS disagrees and notes that the substance of most of this section has been contained in NPS concession contracts for many years. The provisions clearly state the obligations of the parties regarding commencement of construction.

Section 10. Maintenance

Section 10(a). Maintenance Obligation

Several commenters objected to this section on grounds that it is too vague. They suggest that the contract should cover in detail all aspects of maintenance. NPS disagrees with this. Maintenance needs will change from time to time and cannot possibly be fully anticipated over the life of a long-term concession contract.

Section 10(b). Maintenance Plan

Several commenters objected to this section for the reasons discussed above with respect to Operating Plans, i.e., that it allows NPS to revise Maintenance Plans without the agreement of the concessioner. The NPS response is the same. NPS must have the ability to specify maintenance obligations of a concessioner over the term of a contract in order to carry out its responsibilities to protect and preserve park resources and visitors. Maintenance requirements are not static.

For example, it may be determined during the term of a contract that the use of a certain type of paint is detrimental to a native plant species located in the vicinity of a hotel. Unless the use of the paint was determined to be unlawful under Applicable Laws, NPS would not necessarily be in a position to effectively require that use of the paint be stopped if a change to the Maintenance Plan required the agreement of the concessioner.

Accordingly, no change has been made with respect to the general ability of NPS to modify maintenance plans. However, in response to comments, NPS has changed this section in the final contract to state that changes to a Maintenance Plan must reflect reasonable requirements in furtherance of the purposes of the contract.

Section 10(c). Repair and Maintenance Reserve

The general concessioner organization argues that this provision is illegal for the reasons discussed in its comments on the proposed NPS concession contracting regulations. These comments are addressed in the preamble to the final regulations.

NPS has made a change in this section in response to comments. This is to permit any funds left in the account at the end of the contract to remain the property of the concessioner upon the expiration or termination of the contract. However, this section has also been changed to expressly state that any failure by the concessioner to expend funds from the reserve in accordance with its purposes will be considered as a material breach of the contract.

The general concessioner organization made a number of other comments regarding this section that were duly considered by NPS. To the extent that they did not repeat legal arguments made in comments on the proposed concession regulations, NPS does not consider them to be of merit.

One commenter suggested that this provision constitutes an illegal taking of property. However, the provision merely requires a concessioner to maintain government property assigned to it and to escrow sufficient funds for this purpose. This is standard practice in commercial leases.

Section 11. Fees

Section 11(a). Franchise Fees

The general concessioner organization requested deletion of the second sentence of this section on the grounds that a concessioner should have a right to request a waiver of franchise fees under section 407(b) of the 1998 Act. This is not the case. section 407(b) refers to an adjustment of franchise fees, not a waiver. Section 407(b) is reflected in the terms of Subsection 11(d) of this section.

Section 11(b). Payments Due

The general concessioner organization suggests that any franchise fee overpayments due a concessioner at the expiration of a concession contract should be remitted to the concessioner by NPS. NPS has made this change in the final contract.

Section 11(c). Interest

The general concessioner organization suggests that NPS should have discretion not to charge interest on overdue payments. NPS disagrees. In fact, it has a legal obligation to charge interest on overdue payments to the government. The commenter also objects to the last sentence as vague and overbroad. However, all the sentence states is that the Director may impose penalties for late payments in accordance with applicable law. NPS does not consider this sentence to be vague or overbroad.

Section 11(d). Reconsideration of Franchise Fees

NPS has made several changes to this section in response to the comments of the general concessioner organization (and has used the term ''adjustment'' of franchise fees to track the term used in the 1998 Act).

First, NPS has made all aspects of the adjustment process (except arbitration of an appropriate adjusted fee if the parties agree that extraordinary, unanticipated changes have occurred) subject to mutual agreement so that no advantage is given NPS. This is consistent with changes in the final concession regulations. Second, it has provided for prospective adjustments only, as requested by the general concessioner organization. Third, NPS has amended the time periods in accordance with the suggestions of the commenter. Other conforming changes have been made to this section in the final contract.

NPS notes that several commenters objected to the arbitration procedures to be followed. The section has been amended to state that the procedures are to be agreed to by the parties or are to be established by the arbitration panel.

Section 12. Indemnification and Insurance

Section 12(a). Indemnification

The general concessioner organization objected to the indemnification provision as being too broad. NPS has considered the views of the commenter but believes the terms of the indemnification provision are appropriate. Nevertheless, NPS has changed the phrase ''relating to'' to ''connected with'' in this section to address this concern. Another commenter suggested that a concessioner should not be required to indemnify NPS if the injury arose from the negligence of NPS. NPS does not consider that the indemnification provision as written suggests this.

Section 12(b). Insurance in General

Several commenters objected to this on the grounds that it permits the Director to alter the contract's insurance requirements. However, the liabilities of a concessioner necessarily will change over time as a result of new construction, new concessioner activities or means to implement activities, or changing visitor patterns and activities. NPS must have the authority to require changes to the concessioner's insurance program to reflect changing conditions in order to properly provide for the protection of park resources and visitors. NPS, in response to comments, has added a sentence to this section in the final contract setting forth the scope of any changes that may be required.

Section 12(c). Commercial Public Liability

NPS has amended subsection (4) in response to public comments. However, NPS has an obligation to park visitors to make sure that concessioners carry adequate insurance. Levels and types of insurance necessarily change over time.

Section 12(d). Property Insurance

Several comments were made regarding this section. NPS has duly considered them and has made a change to the final contract to make clear that replacement cost coverage is the basis of required property insurance. In addition, it has changed the final contract to make clear that the concessioner may obtain additional

insurance other than that required by NPS or in higher amounts. Also, it has changed the final contract to clarify that the concessioner is responsible for repair or replacement of damaged property even if insurance proceeds are not sufficient.

The general concessioner organization argued that monies a concessioner spends to repair or replace property over and above insurance proceeds should result in leasehold surrender interest. NPS agrees with this to the extent that the concessioner may construct or install a capital improvement within the meaning of 36 CFR Part 51 with its own funds (not insurance proceeds).

Finally, NPS has changed this section in the final contract to provide that any additional insurance NPS may require must be consistent with industry practices.

Section 13. Bonds and Liens

Section 13(a)

The general concessioner organization states that historically NPS has not required bonds. However, NPS concession contracts for many years have contained a bond provision. NPS has changed this section in the final contract to make clear that bond amounts are to be reasonable in response to a comment.

Section 13(b). Liens

The general concessioner organization objects to this section only to the extent that it should not include personal property of a concessioner located outside the boundaries of the park area. NPS has amended this section in the final rule to reflect this comment. Another commenter suggested that the government's lien is unworkable in the marketplace. However, this lien provision has been included in NPS concession contracts at least since 1965. NPS considers it to be workable.

Section 14. Accounting Records and Reports

Section 14(a). Accounting System

The general concessioner organization considers that the $250,000 threshold for accrual method accounting is too low. NPS disagrees. NPS has a direct interest in the accounting methods of concessioners that pay a franchise fee on gross receipts. NPS does not consider that the benefits of the accrual method are outweighed by any additional costs that the general concessioner organization asserts may result from use of accrual method accounting.

The general concessioner organization reads subsection (3) of this section as suggesting that it is not proper for a concessioner to purchase services from an affiliate or allocate overhead. This is not the case. The provision only states that the concessioner must keep its books in such a manner that no diversion or concealment of profits may result from such arrangements. This has been a standard provision (in the General Provisions section) of concession contracts for many years.

Section 14(b).—Annual Financial Report

The general concessioner organization requested several changes to this section. In response, NPS has changed the time period in subsection (1) to 120 days. It has not changed the thresholds for accounting by certified independent accountants in order to protect the interests of the United States in the collection of franchise fees.

Section 14(c). Other Financial Reports

The general concessioner organization objected to the last sentence of subsection (1) on the grounds that the concepts of useful life and book value are irrelevant because of leasehold surrender interest. NPS has changed the section in accordance with this comment.

Section 15. Other Reporting Requirements

The general concessioner organization objected to this section as overbroad. NPS has considered these comments but believes that the described reporting requirements are necessary for the proper administration of the park area.

Section 16. Suspension and Termination

Section 16(a). Suspension

The general concessioner organization objected to the circumstances in which NPS may suspend a concessioner's operations under this section. NPS notes that this provision is the same as in its current standard contract. However, NPS has modified this section in the final contract in response to this comment and to more directly track 36 CFR Part 51.

Section 16(b). Termination

Section 16(b)(1)

A commenter suggested that there is no authority for NPS to have the ability to terminate concession contracts ''nor is such power provided any government agent under general contract law.'' This, however, is not the case. NPS clearly has not only the authority but the obligation to include termination provisions in concession contracts in circumstances, among others, where park area and visitor protections so require. NPS also notes that government procurement contracts almost always contain a ''termination for convenience'' clause which permits the government to terminate the contract for any reason whatsoever. The termination clause contained in most current NPS concession contracts and in the final new contract is significantly more restrictive (to the benefit of the concessioner) than the standard government termination for convenience clause. NPS also notes that this section is the same as contained in the current NPS standard contract. However, NPS has modified this section in the final contract in response to this comment and to more directly track 36 CFR part 51. It has also included the modifier ''material'' with respect to contract breaches in response to a comment.

Section 16(b)(2)

The general concessioner organization objected to this section on the grounds that it should not permit partial termination of a concession contract by NPS. NPS notes that this section has been contained in NPS concession contracts for many years. However, in response to this comment, NPS has deleted reference to partial termination.

Section 16(b)(3)

The general concessioner organization objected to this section with respect to the ''sole discretion'' provided to NPS. NPS has deleted this phrase in the final contract. NPS has also, in response to the comments of the general concessioner organization, defined ''repeated breaches'' in the final contract.

Section 16(b)(3)

The general concessioner organization stated that this section should permit the concessioner an appropriate time period in which to obtain the dismissal of such filings. NPS has not made this change, as termination in these circumstances is discretionary, not mandatory.

Section 16(c). Bankruptcy

In response to the comments of the general concessioner organization, NPS has amended this section in the final rule to provide for notification of NPS in the event of the filing of a petition in bankruptcy and to make clear that the description of a concession contract with respect to bankruptcy law is the position of NPS.

Section 16(d). Requirements in the Event of Termination

Section 16(d)(1)

NPS has included the phrase ''in accordance herewith'' after the word ''contract'' in this section as requested by the general concessioner organization.

Section 16(d)(2)

Section 16(d)(3)

The general concessioner organization objects to this provision which requires a concessioner, if requested by NPS, to continue to operate for a period of time after contract expiration or other termination. This has been a standard provision of concession contracts for many years. However, in light of NPS's new authorities under the 1998 Act, NPS does not consider this provision to be necessary and has deleted it from the final contract.

Section 16(d)(4)

NPS has considered the comments of the general concessioner organization and does not believe that this section should be changed. The provision provides adequate compensation to a prior concessioner for the temporary use by a new concessioner of the prior concessioner's personal property. NPS notes, in response to a comment, that the compensation provisions for temporary use of a concessioner's property are generally the same or even more beneficial to the concessioner than those that have been contained in NPS concession contracts at least since 1965.

Section 17. Compensation

Section 17(a). Just Compensation

The general concessioner organization states that this provision requires the concessioner to accept the compensation provided by Section 17 even if NPS breaches the concession contract.

However, the provision is only applicable to the circumstances described in the provision, which do not reference breach of contract by NPS.

Section 17(b). Compensation for Contract Expiration or Termination

Section 17(b) has been reworded for clarity, to reflect the deletion of subsection (c), and to delete its last sentence as unnecessary.

Section 17(c). Compensation When Contract Terminated for Default

The general concessioner organization objected to this provision on the grounds that NPS may not offset leasehold surrender interest payments based on damages caused by a concessioner's breach of contract. NPS does not necessarily agree with this comment but has deleted this section in the final contract as unnecessary.

Section 17(d). Procedures for Establishing the Value of a Leasehold Surrender Interest

This provision has been changed in accordance with the terms of the final amendment to 36 CFR part 51 and for clarity.

Section 17(e). Compensation for Personal Property

NPS has modified this section in response to comments from the general concessioner organization. Particularly, the contract now provides 30 days in most cases for a concessioner to remove its personal property from a park area after contract expiration or termination. This provision has been moved to Section 16(d). However, NPS does not agree that concession contracts should provide compensation for a concessioner's personal property for the reasons discussed above.

Section 18. Assignment, Sale, or Encumbrance of Interests

This section has been clarified in the final contract to make clear that a sale or transfer is subject to all applicable laws, including, without limitation, 36 CFR Part 51. Several commenters were concerned that this provision (and other provisions of the contract) permits NPS to change the conditions for sales and transfers by amending 36 CFR Part 51. Amendments to 36 CFR Part 51, however, or to other laws or regulations, may be made applicable to existing contracts only to the extent permissible under law.

Section 19. General Provisions

Section 19(a)

Section 19(b)

The general concessioner organization suggests that this provision requires NPS to release concessioner information. The provision, however, merely states the fact that information provided to NPS by a concessioner is subject to public release if required or authorized by law. NPS has clarified this provision in the final contract in this connection.

Section 19(c)

NPS has modified this section in the final contract in response to a comment from the general concessioner organization that it should be clarified to make clear that it only applies to arrangements where a third party is to provide visitor services. In addition, NPS has deleted the sentences in this section that permitted subconcessions in limited circumstances. To the extent that NPS may permit subconcessions in the circumstances of a particular concession contract, a contract amendment would be negotiated with the concessioner.

Section 19(d)

Section 19(e)

Section 19(f)

Section 19(g)

Section 19(h)

Section 19(i)

This section has been deleted in the final contract as unnecessary.

Section 19(k)

Exhibits

On February 23, 2000, NPS published for public comments proposed exhibits to the proposed standard concession contract. Thirteen comments were received and responded to as follows. An environmental consulting firm made a number of comments on the exhibits requesting that many references to environmental concerns be included in them. Some changes have been made in response to these comments.

Exhibit A. Non-Discrimination (Exhibit C in the Final Contract)

A comment suggested deleting reference to the term ''permit.'' This change has been made in the final contract.

A comment suggested that the posting requirements of this section might be redundant with other federal requirements. The inclusion of this provision in the contract, however, is required by law.

Exhibit B. Existing Facilities (Exhibit D in the Final Contract)

A comment pointed out that the land assignment under this section is limited to ''housekeeping purposes.'' The term ''housekeeping'' has been deleted in the final contract.

Exhibit C. Assigned Government Personal Property (Exhibit E in the Final Contract)

Exhibit D. Leasehold Surrender Interest as of the Effective Date of the Contract (Exhibit G in the Final Contract)

Exhibit E. Insurance Requirements (Exhibit I in the Final Contract)

The general concessioner organization made a number of suggestions regarding this section. Several changes have been made in the final contract in response

to these comments. However, in general, NPS notes that this Exhibit E is intended to be tailored on a case by case basis to fit the needs of particular concession operations.

A comment objected to the $5,000 self-insured retention as being inconsistent with some concessioners' business practices. This may be the case, but NPS, in order to protect its interests and those of park visitors, considers this limit to be appropriate.

One commenter objected to the concessioner being required to provide NPS with copies of insurance policies. However, this only occurs upon the express request of NPS.

Several comments objected to the specific deductibles required by this Exhibit. NPS, however, considers that relatively low deductibles are necessary in order to assure that the concessioner will have sufficient resources to cover losses.

The proposed requirement for professional liability insurance has been deleted in response to comments.

A comment stated that flood and other forms of insurance are not always available. NPS notes that the insurance exhibit will be tailored to fit the needs of particular concession operations. If insurance is not obtainable, as determined by the Director, it will not be required.

Exhibit F. Sample Maintenance Plan (Exhibit H in the Final Contract)

The published maintenance plan was a sample only. None of its provisions (except for its introduction) are required. Rather, a maintenance plan will be developed for each concession operation on the basis of the circumstances of that operation. Accordingly, the final contract includes only the required introductory paragraph of the maintenance plan but not any of the sample provisions. A number of comments objected in general to the fact that this plan may be changed from time to time by the Superintendent. Such comments were also made in response to the initial publication of the proposed contract. They are discussed in the response to comments on Section 10(b). In addition, in response to a comment, it is noted that NPS administrative guidelines will provide an administrative appeal by the concessioner to the appropriate NPS Regional Director with respect to changes to a Maintenance Plan proposed by a superintendent of a park area.

The plan has been amended to include reference to the fact that amendments to it must be reasonable and in furtherance of the purposes of the contract.

Exhibit G. Operating Plan (Exhibit B in the Final Contract)

The published operating plan is a sample only. None of its provisions (except for its introduction) are required. An operating plan will be developed for each concession operation on the basis of the circumstances of that operation. Accordingly, the final contract includes only the required introductory paragraph of the operating plan but not any of the sample provisions. A number of comments objected in general to the fact that this plan may be changed from time to time by the Superintendent. Such comments were also made in response to the initial publication of the proposed contract. They are discussed in the response to comments on Section 3(c). In addition, in response to a comment, it is noted that NPS administrative guidelines will provide an administrative appeal by the concessioner to the appropriate NPS Regional Director with respect to changes to an Operating Plan proposed by a superintendent of a park area.

The plan has been amended to include reference to the fact that amendments to it must be reasonable and in furtherance of the purposes of the contract.

Exhibit H. Concessioner Construction and Repair and Maintenance Project Procedures (Exhibit F in the Final Contract)

A number of comments were made on this exhibit that duplicated comments made on the proposed contract with respect to leasehold surrender interest provisions and related matters.

These comments are responded to under the leasehold surrender interest provisions. In addition, Exhibit H has been changed in the final contract to reflect the changes made to the leasehold surrender interest provisions of the final contract and regulations.

A comment suggested that there is no definition of repair and maintenance projects. Further definitions have been included in the final exhibit in this connection.

A comment suggested that the identification of individuals by function should permit an individual to perform more than one function. NPS considers that this ability is implicit in the terms of the Exhibit.

A comment suggested that the two separate plans should be combined. NPS disagrees. There are clear distinctions between the plans.

A comment suggested that the requirements for identification of projects is vague and subjective. The language has been changed in the final contract to make it more specific.

A comment suggested that the procedures for conferences and review are unduly burdensome. NPS does not believe this to be the case, at least in the circumstances of construction in areas of the national park system. The comment suggested that the complete procedures only be applicable to construction projects. NPS disagrees. Repair and maintenance projects may have the same impacts as construction projects.

A comment suggested that wording should be added providing compensation to the concessioner if a project is not permitted to proceed. NPS does not consider this appropriate. Concessioners are aware that a number of legal and policy considerations must be dealt with before any binding commitment to permit construction on park lands may be made. The risk that proposed construction or repair and maintenance projects may not be approved is a cost of doing business as a concessioner.

A comment suggested that the terms regarding total project cost and total project price do not define what costs and expenses are included. This would be difficult and non-productive in a generic document such as Exhibit H. The expenses and costs associated with projects will be identified on a case by case, subject to the limitations of leasehold surrender interest cost as described in Exhibit A to the contract.

A comment suggested that the exhibit provide for a simplified process in emergency situations. No change has been made but the Superintendent would have such authority in emergency situations.

Suggestions for Additional Provisions

Several commenters requested that additional provisions not mentioned in the above discussion be included in concession contracts.

A commenter suggested that a dispute resolution clause be included in the contract. NPS does not consider this appropriate in light of the several arbitration requirements of the contract. In circumstances where a dispute is not subject to arbitration, the matter is subject to resolution under applicable legal procedures.

A commenter also suggested that the contract contain a clause that permits the parties to agree to alternative dispute resolution procedures by mutual agreement. NPS considers that this ability exists under the terms of the

contract as drafted and general contract law.

A commenter suggested that the concession contract contain an exclusivity clause. NPS disagrees for the reasons discussed in response to comments on the amendment to 36 CFR part 51.

A commenter suggested that performance standards should be contained in the contract or in an exhibit. NPS is considering the possibility of adding additional performance measures to concession contracts. For the present, however, NPS considers that the standard contract and its exhibits, particularly the operating and maintenance plans, are adequate for this purpose. NPS also notes that it has previously published for public comment its concessioner evaluation program currently in place.

A commenter suggested that the contract include as an exhibit a standard document equivalent to a non-disturbance and attornment agreement. NPS disagrees that such a document should be included as part of the standard concession contract in light of the greatly varying circumstances of concession contracts with respect to the scopes of activities.

Several commenters suggested including a provision referring to the preferential right to renewal of certain concession contracts that NPS is to grant to some concessioners under certain conditions pursuant to the terms of section 403(7) of the 1998 Act. NPS considers, however, that inclusion of a contractual provision referring to a possible preferential right to renewal under the terms of the 1998 Act would only create confusion as it is impossible to know, upon execution of any particular concession contract, whether the contract will be renewed at all or, if renewed, whether NPS is to give a preferential right of renewal to the concessioner under the terms of the 1998 Act in light of the conditions applicable to the exercise of such preference.

A commenter, in response to the notice regarding the revised section 6 and exhibits, requested that the standard concession contract be republished for further public comment. NPS does not believe this to be in the public interest for the reasons discussed in the preamble to the final regulations (which are equally applicable to the standard contract).

Based on the foregoing, NPS adopts the following standard form concession contract for use in its concession management program, with the understanding that it is only an internal guideline. The Director, in his discretion, may utilize any form of concession contract he/she may choose consistent with the requirements of the 1998 Act and 36 CFR part 51.

UNITED STATES DEPARTMENT OF THE INTERIOR

NATIONAL PARK SERVICE

_____

[Name of Area]

_____

[Site]

_____

[Type of Service]

CONCESSION CONTRACT NO._____

_____

[Name of Concessioner]

_____

[Address, including email address and phone number]

Doing Business As

Covering the Period

through____ _____

Concession Contract

Table of Contents

Identification of the Parties
Sec. 1. Term of Contract
Sec. 2. Definitions
Sec. 3. Services and Operations
A. Required and Authorized Visitor Services
B. Operation and Quality of Operation
C. Operating Plan
D. Merchandise and Services
E. Rates
F. Impartiality as to Rates and Services
Sec. 4. Concessioner Personnel
A. Employees
B. Employee Housing and Recreation
Sec. 5. Legal, Regulatory, and Policy Compliance
A. Legal, Regulatory, and Policy Compliance
B. Notice
C. How and Where to Send Notice
Sec. 6. Environmental and Cultural Protection
A. Environmental Management Objectives
B. Environmental Management Program
C. Environmental Management Measurement
D. Environmental Data, Reports, Notifications, and Approvals
E. Corrective Action
F. Indemnification and Cost Recovery for Concessioner Environmental Activities
G. Weed and Pest Management
H. Protection of Cultural and Archeological Resources
Sec. 7. Interpretation of Area Resources
A. Concessioner Obligations
B. Director Review of Content
Sec. 8. Concession Facilities Used in Operation by Concessioner
A. Assignment of Concession Facilities
B. Concession Facilities Withdrawals
C. Effect of Withdrawal
D. Right of Entry
E. Personal Property
F. Condition of Concession Facilities
G. Utilities Provided by the Director
H. Utilities Not Provided by the Director
Sec. 9. Construction or Installation of Real Property Improvements
A. Construction of Real Property Improvements
B. Removal of Real Property Improvements
C. Leasehold Surrender Interest
D. Concession Facilities Improvement Program
Sec. 10. Maintenance
A. Maintenance Obligation
B. Maintenance Plan
C. Repair and Maintenance Reserve
Sec. 11. Fees
A. Franchise Fee
B. Payments Due
C. Interest
D. Adjustment of Franchise Fee
Sec. 12. Indemnification and Insurance
A. Indemnification
B. Insurance in General
C. Commercial Public Liability
D. Property Insurance
Sec. 13 Bonds and Liens
A. Bonds
B. Lien
Sec. 14. Accounting Records and Reports
A. Accounting System
B. Annual Financial Report
C. Other Financial Reports
Sec. 15. Other Reporting Requirements
A. Insurance Certification
B. Environmental Reporting
C. Miscellaneous Reports and Data
Sec. 16. Suspension, Termination, or Expiration
A. Suspension
B. Termination
C. Notice of Bankruptcy or Insolvency
D. Requirements in the Event of Termination or Expiration
Sec. 17. Compensation
A. Just Compensation
B. Compensation for Contract Expiration or Termination
C. Procedures for Establishing the Value of a Leasehold Surrender Interest
D. Compensation for Personal Property
Sec. 18. Assignment, Sale or Encumbrance of Interests
Sec. 19. General Provisions
Exhibits
Exhibit A: Leasehold Surrender Interest
Exhibit B: Operating Plan
Exhibit C: Nondiscrimination.
Exhibit D: Assigned Land, Real Property Improvements
Exhibit E: Assigned Government Personal Property
Exhibit F: Concessioner Construction, Major Rehabilitation, and Repair and Maintenance Project Procedures
Exhibit G: Leasehold Surrender Interest
Exhibit H: Maintenance Plan
Exhibit I: Insurance Requirements

[Corporation]

THIS CONTRACT is made and entered into by and between the United States of America, acting in this matter by the Director of the National Park Service, through the Regional Director of the __ Region, (hereinafter referred to as the ''Director''), and _____, a corporation

organized and existing under the laws of the State of _____ (hereinafter referred to as the ''Concessioner''):

[Partnership]

THIS CONTRACT is made and entered into by and between the United States of America, acting in this matter by the Director of the National Park Service, through the Regional Director of the __ Region, hereinafter referred to as the ''Director'', and _____ a partnership organized under the laws of the State of _____, hereinafter referred to as the ''Concessioner'':

[Sole Proprietorship]

THIS CONTRACT made and entered into by and between the United States of America, acting in this matter by the Director of the National Park Service, through the Regional Director of the __ Region, hereinafter referred to as the ''Director,'' and, _____, an individual of, doing business as _____, hereinafter referred to as the ''Concessioner'':

Witnesseth:

That Whereas, [*Name of Park, Recreation Area, etc.*] is administered by the Director as a unit of the national park system to conserve the scenery and the natural and historic objects and the wildlife therein, and to provide for the public enjoyment of the same in such manner as will leave such Area unimpaired for the enjoyment of future generations; and

Whereas, to accomplish these purposes, the Director has determined that certain visitor services are necessary and appropriate for the public use and enjoyment of the Area and should be provided for the public visiting the Area; and

Whereas, the Director desires the Concessioner to establish and operate these visitor services at reasonable rates under the supervision and regulation of the Director; and

Whereas, the Director desires the Concessioner to conduct these visitor services in a manner that demonstrates sound environmental management, stewardship, and leadership;

Now, Therefore, pursuant to the authority contained in the Acts of August 25, 1916 (16 U.S.C. 1, 2–4), and November 13, 1998 (Pub. L. 105–391), and other laws that supplement and amend the Acts, the Director and the Concessioner agree as follows:

Sec. 1. Term of Contract

This Concession Contract No. _____ (''CONTRACT'') shall be effective as of _____, and shall be for the term of _____ (__) years until its expiration on _____, 20 ____ [if the Concessioner satisfactorily completes the Concession Facilities Improvement Program described in Section 9(e) of this CONTRACT. If the Concessioner fails to complete this program to the satisfaction of the Director within the time specified, then this CONTRACT shall be for the term of _____ (__) years until its expiration on _____. The Director may extend this shortened term (but not beyond the original date of expiration of this CONTRACT) in circumstances where the Director determines that the delay resulted from events beyond the control of the Concessioner.]

Sec. 2. Definitions

The following terms used in this CONTRACT will have the following meanings, which apply to both the singular and the plural forms of the defined terms:

(a) ''Applicable Laws'' means the laws of Congress governing the Area, including, but not limited to, the rules, regulations, requirements and policies promulgated under those laws (e.g., 36 CFR Part 51), whether now in force, or amended, enacted or promulgated in the future, including, without limitation, federal, state and local laws, rules, regulations, requirements and policies governing nondiscrimination, protection of the environment and protection of public health and safety.

(b) ''Area'' means the property within the boundaries of [*Name of Park Unit*].

(c) ''Best Management Practices'' or ''BMPs'' are policies and practices that apply the most current and advanced means and technologies available to the Concessioner to undertake and maintain a superior level of environmental performance reasonable in light of the circumstances of the operations conducted under this CONTRACT. BMPs are expected to change from time to time as technology evolves with a goal of sustainability of the Concessioner's operations. Sustainability of operations refers to operations that have a restorative or net positive impact on the environment.

(d) ''Capital Improvement'' shall have the meaning set forth in Exhibit A to this CONTRACT.

(e) ''Concession Facilities'' shall mean all Area lands assigned to the Concessioner under this CONTRACT and all real property improvements assigned to or constructed by the Concessioner under this CONTRACT. The United States retains title and ownership to all Concession Facilities.

(f) ''Days'' shall mean calendar days.

(g) ''Director'' means the Director of the National Park Service, acting on behalf of the Secretary of the Interior and the United States, and his duly authorized representatives.

(h) ''Exhibit'' or ''Exhibits'' shall mean the various exhibits, which are attached to this CONTRACT, each of which is hereby made a part of this CONTRACT.

(i) ''Gross receipts'' means the total amount received or realized by, or accruing to, the Concessioner from all sales for cash or credit, of services, accommodations, materials, and other merchandise made pursuant to the rights granted by this CONTRACT, including gross receipts of subconcessioners as herein defined, commissions earned on contracts or agreements with other persons or companies operating in the Area, and gross receipts earned from electronic media sales, but excluding:

(1) intracompany earnings on account of charges to other departments of the operation (such as laundry);

(2) charges for employees' meals, lodgings, and transportation;

(3) cash discounts on purchases;

(4) cash discounts on sales;

(5) returned sales and allowances;

(6) interest on money loaned or in bank accounts;

(7) income from investments;

(8) income from subsidiary companies outside of the Area;

(9) sale of property other than that purchased in the regular course of business for the purpose of resale;

(10) sales and excise taxes that are added as separate charges to sales prices, gasoline taxes, fishing license fees, and postage stamps, provided that the amount excluded shall not exceed the amount actually due or paid government agencies; and

(11) receipts from the sale of handicrafts that have been approved for sale by the Director as constituting authentic American Indian, Alaskan Native, Native Samoan, or Native Hawaiian handicrafts.

All monies paid into coin operated devices, except telephones, whether provided by the Concessioner or by others, shall be included in gross receipts. However, only revenues actually received by the Concessioner from coin-operated telephones shall be included in gross receipts. All revenues received from charges for in-room telephone or computer access shall be included in gross receipts.

(j) ''Gross receipts of subconcessioners'' means the total amount received or realized by, or accruing to, subconcessioners from all sources, as a result of the exercise of the rights conferred by a subconcession contract. A subconcessioner will report all of its gross receipts to the

Concessioner without allowances, exclusions, or deductions of any kind or nature.

(k) ''Leasehold Surrender Interest'' shall have the meaning set forth in Exhibit A to this CONTRACT.

(l) ''Leasehold Surrender Interest Value'' or the ''value'' of a Leasehold Surrender Interest shall have the meaning set forth in Exhibit A to this CONTRACT.

(m) ''Major Rehabilitation'' shall have the meaning set forth in Exhibit A to this CONTRACT.

(n) ''Possessory Interest'' shall have the meaning set forth in Exhibit A to this CONTRACT.

(o) ''Real Property Improvements'' shall have the meaning set forth in Exhibit A to this CONTRACT.

(p) ''Subconcessioner'' means a third party that, with the approval of the Director, has been granted by a concessioner rights to operate under a concession contract (or any portion thereof), whether in consideration of a percentage of revenues or otherwise.

(q) ''Superintendent'' means the manager of the Area.

(r) ''Visitor services'' means the accommodations, facilities and services that the Concessioner is required and/or authorized to provide by section 3(a) of this CONTRACT.

Sec. 3. Services and Operations

(a) Required and Authorized Visitor Services

During the term of this CONTRACT, the Director requires and authorizes the Concessioner to provide the following visitor services for the public within the Area:

(1) *Required Visitor Services.* The Concessioner is required to provide the following visitor services during the term of this CONTRACT:

[Provide a detailed description of required services. Broad generalizations such as ''any and all facilities and services customary in such operations'' or ''such additional facilities and services as may be required'' are not to be used.]

(2) *Authorized Visitor Services.* The Concessioner is authorized but not required to provide the following visitor services during the term of this CONTRACT:

[Provide detailed description of authorized services. See note in subsection (a)(1) above.]

(b) Operation and Quality of Operation

The Concessioner shall provide, operate and maintain the required and authorized visitor services and any related support facilities and services in accordance with this CONTRACT to such an extent and in a manner considered satisfactory by the Director. Except for any such items that may be provided to the Concessioner by the Director, the Concessioner shall provide the plant, personnel, equipment, goods, and commodities necessary for providing, operating and maintaining the required and authorized visitor services in accordance with this CONTRACT. The Concessioner's authority to provide visitor services under the terms of this CONTRACT is non-exclusive.

(c) Operating Plan

The Director, acting through the Superintendent, shall establish and revise, as necessary, specific requirements for the operations of the Concessioner under this CONTRACT in the form of an Operating Plan (including, without limitation, a risk management program, that must be adhered to by the Concessioner). The initial Operating Plan is attached to this CONTRACT as Exhibit B. The Director in his discretion, after consultation with the Concessioner, may make reasonable modifications to the initial Operating Plan that are in furtherance of the purposes of this CONTRACT and are not inconsistent with the terms and conditions of the main body of this CONTRACT.

(d) Merchandise and Services

(1) The Director reserves the right to determine and control the nature, type and quality of the visitor services described in this CONTRACT, including, but not limited to, the nature, type, and quality of merchandise, if any, to be sold or provided by the Concessioner within the Area.

(2) All promotional material, regardless of media format (i.e. printed, electronic, broadcast media), provided to the public by the Concessioner in connection with the services provided under this CONTRACT must be approved in writing by the Director prior to use. All such material will identify the Concessioner as an authorized Concessioner of the National Park Service, Department of the Interior.

(3) The Concessioner, where applicable, will develop and implement a plan satisfactory to the Director that will assure that gift merchandise, if any, to be sold or provided reflects the purpose and significance of the Area, including, but not limited to, merchandise that reflects the conservation of the Area's resources or the Area's geology, wildlife, plant life, archeology, local Native American culture, local ethnic culture, and historic significance.

(e) Rates

All rates and charges to the public by the Concessioner for visitor services shall be reasonable and appropriate for the type and quality of facilities and/or services required and/or authorized under this CONTRACT. The Concessioner's rates and charges to the public must be approved by the Director in accordance with Applicable Laws and guidelines promulgated by the Director from time to time.

(f) Impartiality as to Rates and Services

(1) Subject to Section (f)(2) and (f)(3), in providing visitor services, the Concessioner must require its employees to observe a strict impartiality as to rates and services in all circumstances. The Concessioner shall comply with all Applicable Laws relating to nondiscrimination in providing visitor services to the public including, without limitation, those set forth in Exhibit C.

(2) The Concessioner may grant complimentary or reduced rates under such circumstances as are customary in businesses of the character conducted under this CONTRACT. However, the Director reserves the right to review and modify the Concessioner's complimentary or reduced rate policies and practices as part of its rate approval process.

(3) The Concessioner will provide Federal employees conducting official business reduced rates for lodging, essential transportation and other specified services necessary for conducting official business in accordance with guidelines established by the Director. Complimentary or reduced rates and charges shall otherwise not be provided to Federal employees by the Concessioner except to the extent that they are equally available to the general public.

Sec. 4. Concessioner Personnel

(a) Employees

(1) The Concessioner shall provide all personnel necessary to provide the visitor services required and authorized by this CONTRACT.

(2) The Concessioner shall comply with all Applicable Laws relating to employment and employment conditions, including, without limitation, those set forth in Exhibit C.

(3) The Concessioner shall ensure that its employees are hospitable and exercise courtesy and consideration in their relations with the public. The Concessioner shall have its employees who come in direct contact with the public, so far as practicable, wear a uniform or badge by which they may be

identified as the employees of the Concessioner.

(4) The Concessioner shall establish pre-employment screening, hiring, training, employment, termination and other policies and procedures for the purpose of providing visitor services through its employees in an efficient and effective manner and for the purpose of maintaining a healthful, law abiding, and safe working environment for its employees. The Concessioner shall conduct appropriate background reviews of applicants to whom an offer for employment may be extended to assure that they conform to the hiring policies established by the Concessioner.

(5) The Concessioner shall ensure that its employees are provided the training needed to provide quality visitor services and to maintain up-to-date job skills.

(6) The Concessioner shall review the conduct of any of its employees whose action or activities are considered by the Concessioner or the Director to be inconsistent with the proper administration of the Area and enjoyment and protection of visitors and shall take such actions as are necessary to correct the situation.

(7) The Concessioner shall maintain, to the greatest extent possible, a drug free environment, both in the workplace and in any Concessioner employee housing, within the Area.

(8) The Concessioner shall publish a statement notifying employees that the unlawful manufacture, distribution, dispensing, possession, or use of a controlled substance is prohibited in the workplace and in the Area, and specifying the actions that will be taken against employees for violating this prohibition. In addition, the Concessioner shall establish a drug-free awareness program to inform employees about the danger of drug abuse in the workplace and the Area, the availability of drug counseling, rehabilitation and employee assistance programs, and the Concessioner's policy of maintaining a drug-free environment both in the workplace and in the Area.

(9) The Concessioner shall take appropriate personnel action, up to and including termination or requiring satisfactory participation in a drug abuse or rehabilitation program which is approved by a Federal, State, or local health, law enforcement or other appropriate agency, for any employee that is found to be in violation of the prohibition on the unlawful manufacture, distribution, dispensing, possession, or use of a controlled substance.

(b) Employee Housing and Recreation

(1) If the Concessioner is required to provide employee housing under this CONTRACT, the Concessioner's charges to its employees for this housing must be reasonable.

(2) If the visitor services required and/or authorized under this CONTRACT are located in a remote or isolated area, the Concessioner shall provide appropriate employee recreational activities.

Sec. 5. Legal, Regulatory, and Policy Compliance

(a) Legal, Regulatory and Policy Compliance

This CONTRACT, operations thereunder by the Concessioner and the administration of it by the Director, shall be subject to all Applicable Laws. The Concessioner must comply with all Applicable Laws in fulfilling its obligations under this CONTRACT at the Concessioner's sole cost and expense. Certain Applicable Laws governing protection of the environment are further described in this CONTRACT. Certain Applicable Laws relating to nondiscrimination in employment and providing accessible facilities and services to the public are further described in this CONTRACT.

(b) Notice

The Concessioner shall give the Director immediate written notice of any violation of Applicable Laws by the Concessioner, including its employees, agents or contractors, and, at its sole cost and expense, must promptly rectify any such violation.

(c) How and Where to Send Notice

All notices required by this CONTRACT shall be in writing and shall be served on the parties at the following addresses. The mailing of a notice by registered or certified mail, return receipt requested, shall be sufficient service. Notices sent to the Director shall be sent to the following address:

Superintendent

Park name

Address

Attention:

Notices sent to the Concessioner shall be sent to the following address:

Concessioner

Address

Attention:

Sec. 6. Environmental and Cultural Protection

(a) Environmental Management Objectives

The Concessioner shall meet the following environmental management objectives (hereinafter ''Environmental Management Objectives'') in the conduct of its operations under this CONTRACT:

(1) The Concessioner, including its employees, agents and contractors, shall comply with all Applicable Laws pertaining to the protection of human health and the environment.

(2) The Concessioner shall incorporate Best Management Practices (BMPs) in its operation, construction, maintenance, acquisition, provision of visitor services, and other activities under this CONTRACT.

(b) Environmental Management Program

(1) The Concessioner shall develop, document, implement, and comply fully with, to the satisfaction of the Director, a comprehensive written Environmental Management Program (EMP) to achieve the Environmental Management Objectives. The initial EMP shall be developed and submitted to the Director for approval within sixty days of the effective date of this CONTRACT. The Concessioner shall submit to the Director for approval a proposed updated EMP annually.

(2) The EMP shall account for all activities with potential environmental impacts conducted by the Concessioner or to which the Concessioner contributes. The scope and complexity of the EMP may vary based on the type, size and number of Concessioner activities under this CONTRACT.

(3) The EMP shall include, without limitation, the following elements:

(i) *Policy.* The EMP shall provide a clear statement of the Concessioner's commitment to the Environmental Management Objectives.

(ii) *Goals and Targets.* The EMP shall identify environmental goals established by the Concessioner consistent with all Environmental Management Objectives. The EMP shall also identify specific targets (i.e., measurable results and schedules) to achieve these goals.

(iii) *Responsibilities and Accountability.* The EMP shall identify environmental responsibilities for Concessioner employees and contractors. The EMP shall include the designation of an environmental program manager. The EMP shall include procedures for the Concessioner to implement the evaluation of employee and contractor performance

against these environmental responsibilities.

(iv) *Documentation.* The EMP shall identify plans, procedures, manuals, and other documentation maintained by the Concessioner to meet the Environmental Management Objectives.

(v) *Documentation Control and Information Management System.* The EMP shall describe (and implement) document control and information management systems to maintain knowledge of Applicable Laws and BMPs. In addition, the EMP shall identify how the Concessioner will manage environmental information, including without limitation, plans, permits, certifications, reports, and correspondence.

(vi) *Reporting.* The EMP shall describe (and implement) a system for reporting environmental information on a routine and emergency basis, including providing reports to the Director under this CONTRACT.

(vii) *Communication.* The EMP shall describe how the environmental policy, goals, targets, responsibilities and procedures will be communicated throughout the Concessioner's organization.

(viii) *Training.* The EMP shall describe the environmental training program for the Concessioner, including identification of staff to be trained, training subjects, frequency of training and how training will be documented.

(ix) *Monitoring, Measurement, and Corrective Action.* The EMP shall describe how the Concessioner will comply with the EMP and how the Concessioner will self-assess its performance under the EMP, at least annually, in a manner consistent with NPS protocol regarding audit of NPS operations. The self-assessment should ensure the Concessioner's conformance with the Environmental Management Objectives and measure performance against environmental goals and targets. The EMP shall also describe procedures to be taken by the Concessioner to correct any deficiencies identified by the self-assessment.

(c) Environmental Performance Measurement

The Concessioner shall be evaluated by the Director on its environmental performance under this CONTRACT, including, without limitation, compliance with the approved EMP, on at least an annual basis.

(d) Environmental Data, Reports, Notifications, and Approvals

(1) *Inventory of Hazardous Substances and Inventory of Waste Streams.* The Concessioner shall submit to the Director, at least annually, an inventory of federal Occupational Safety and Health Administration (OSHA) designated hazardous chemicals used and stored in the Area by the Concessioner. The Director may prohibit the use of any OSHA hazardous chemical by the Concessioner in operations under this CONTRACT. The Concessioner shall obtain the Director's approval prior to using any extremely hazardous substance, as defined in the Emergency Planning and Community Right to Know Act of 1986, in operations under this CONTRACT. The Concessioner shall also submit to the Director, at least annually, an inventory of all waste streams generated by the Concessioner under this CONTRACT. Such inventory shall include any documents, reports, monitoring data, manifests, and other documentation required by Applicable Laws regarding waste streams.

(2) *Reports.* The Concessioner shall submit to the Director copies of all documents, reports, monitoring data, manifests, and other documentation required under Applicable Laws to be submitted to regulatory agencies. The Concessioner shall also submit to the Director any environmental plans for which coordination with Area operations are necessary and appropriate, as determined by the Director in accordance with Applicable Laws.

(3) *Notification of Releases.* The Concessioner shall give the Director immediate written notice of any discharge, release or threatened release (as these terms are defined by Applicable Laws) within or at the vicinity of the Area (whether solid, semi-solid, liquid or gaseous in nature), of any hazardous or toxic substance, material, or waste of any kind, including, without limitation, building materials such as asbestos, or any contaminant, pollutant, petroleum, petroleum product or petroleum by-product.

(4) *Notice of Violation.* The Concessioner shall give the Director in writing immediate notice of any written threatened or actual notice of violation from other regulatory agencies of any Applicable Law arising out of the activities of the Concessioner, its agents or employees.

(5) *Communication with Regulatory Agencies.* The Concessioner shall provide timely written advance notice to the Director of communications, including without limitation, meetings, audits, inspections, hearings and other proceedings, between regulatory agencies and the Concessioner related to compliance with Applicable Laws concerning operations under this CONTRACT. The Concessioner shall also provide to the Director any written materials prepared or received by the Concessioner in advance of or subsequent to any such communications. The Concessioner shall allow the Director to participate in any such communications. The Concessioner shall also provide timely notice to the Director following any unplanned communications between regulatory agencies and the Concessioner.

(e) Corrective Action

(1) The Concessioner, at its sole cost and expense, shall promptly control and contain any discharge, release or threatened release, as set forth in this section, or any threatened or actual violation, as set forth in this section, arising in connection with the Concessioner's operations under this CONTRACT, including, but not limited to, payment of any fines or penalties imposed by appropriate agencies. Following the prompt control or containment of any release, discharge or violation, the Concessioner shall take all response actions necessary to remediate the release, discharge or violation, and to protect human health and the environment.

(2) Even if not specifically required by Applicable Laws, the Concessioner shall comply with directives of the Director to clean up or remove any materials, product or by-product used, handled, stored, disposed, or transported onto or into the Area by the Concessioner to ensure that the Area remains in good condition.

(f) Indemnification and Cost Recovery for Concessioner Environmental Activities

(1) The Concessioner shall indemnify the United States in accordance with section 12 of this CONTRACT from all losses, claims, damages, environmental injuries, expenses, response costs, allegations or judgments (including, without limitation, fines and penalties) and expenses (including, without limitation, attorneys fees and experts' fees) arising out of the activities of the Concessioner, its employees, agents and contractors pursuant to this section. Such indemnification shall survive termination or expiration of this CONTRACT.

(2) If the Concessioner does not promptly contain and remediate an unauthorized discharge or release arising out of the activities of the Concessioner, its employees, agents and contractors, as set forth in this section, or correct any environmental self-

assessment finding of non-compliance, in full compliance with Applicable Laws, the Director may, in its sole discretion and after notice to the Concessioner, take any such action consistent with Applicable Laws as the Director deems necessary to abate, mitigate, remediate, or otherwise respond to such release or discharge, or take corrective action on the environmental self-assessment finding. The Concessioner shall be liable for and shall pay to the Director any costs of the Director associated with such action upon demand. Nothing in this section shall preclude the Concessioner from seeking to recover costs from a responsible third party.

(g) Weed and Pest Management

The Concessioner shall be responsible for managing weeds, and through an integrated pest management program, harmful insects, rats, mice and other pests on Concession Facilities assigned to the Concessioner under this CONTRACT. All such weed and pest management activities shall be in accordance with Applicable Laws and guidelines established by the Director.

(h) Protection of Cultural and Archeological Resources.

The Concessioner shall ensure that any protected sites and archeological resources within the Area are not disturbed or damaged by the Concessioner, including the Concessioner's employees, agents and contractors, except in accordance with Applicable Laws, and only with the prior approval of the Director. Discoveries of any archeological resources by the Concessioner shall be promptly reported to the Director. The Concessioner shall cease work or other disturbance which may impact any protected site or archeological resource until the Director grants approval, upon such terms and conditions as the Director deems necessary, to continue such work or other disturbance.

Sec. 7. Interpretation of Area Resources

(a) Concessioner Obligations

(1) The Concessioner shall provide all visitor services in a manner that is consistent with and supportive of the interpretive themes, goals and objectives of the Area as reflected in Area planning documents, mission statements and/or interpretive prospectuses.

(2) The Concessioner may assist in Area interpretation at the request of the Director to enhance visitor enjoyment of the Area. Any additional visitor services that may result from this assistance must be recognized in writing through written amendment of Section 3 of this CONTRACT.

(3) The Concessioner is encouraged to develop interpretive materials or means to educate visitors about environmental programs or initiatives implemented by the Concessioner.

(b) Director review of content

The Concessioner must submit the proposed content of any interpretive programs, exhibits, displays or materials, regardless of media format (i.e. printed, electronic, or broadcast media), to the Director for review and approval prior to offering such programs, exhibits, displays or materials to Area visitors.

Sec. 8. Concession Facilities Used in Operation by the Concessioner

(a) Assignment of Concession Facilities

(1) The Director hereby assigns the following Concession Facilities to the Concessioner for the purposes of this CONTRACT:

(i) certain parcels of Area land as described in Exhibit D upon which, among other matters, the Concessioner may be authorized to construct real property; and

(ii) certain real property improvements described in Exhibit D in existence as of the effective date of this CONTRACT, as may be modified from time to time to include additional real property improvements completed in accordance with the terms and conditions of this CONTRACT.

(2) The Director shall from time to time amend Exhibit D to reflect changes in Concession Facilities assigned to the Concessioner, including, without limitation, amending Exhibit D to reflect the addition of real property improvements completed in accordance with the terms and conditions of this CONTRACT and to reflect the withdrawal of concession facilities as set forth below.

(b) Concession Facilities Withdrawals

The Director may withdraw all or portions of these Concession Facilities assignments at any time during the term of this CONTRACT if:

(1) the withdrawal is necessary for the purpose of conserving, preserving or protecting Area resources or visitor enjoyment or safety;

(2) the operations utilizing the assigned Concession Facilities have been terminated or suspended by the Director; or

(3) land or real property improvements assigned to the Concessioner are no longer necessary for the concession operation.

(c) Effect of Withdrawal

Any permanent withdrawal of assigned Concession Facilities which the Director or the Concessioner considers to be essential for the Concessioner to provide the visitor services required by this CONTRACT will be treated as a termination of this CONTRACT pursuant to Section 16. The Concessioner will be compensated pursuant to Section 17 for the value of any Leasehold Surrender Interest it may have, if any, in permanently withdrawn Concession Facilities. No other compensation is due the Concessioner in these circumstances.

(d) Right of Entry

The Director shall have the right at any time to enter upon or into the Concession Facilities assigned to the Concessioner under this CONTRACT for any purpose he may deem necessary for the administration of the Area.

(e) Personal Property

(1) *Personal Property Provided by the Concessioner.* The Concessioner shall provide all personal property, including without limitation removable equipment, furniture and goods, necessary for its operations under this CONTRACT, unless such personal property is provided by the Director as set forth in subsection (e)(2).

(2) *Personal Property Provided by the Government.* The Director may provide certain items of government personal property, including without limitation removable equipment, furniture and goods, for the Concessioner's use in the performance of this CONTRACT. The Director hereby assigns government personal property listed in Exhibit E to the Concessioner as of the effective date of this CONTRACT. This Exhibit E will be modified from time to time by the Director as items may be withdrawn or additional items added. The Concessioner shall be accountable to the Director for the government personal property assigned to it and shall be responsible for maintaining the property as necessary to keep it in good and operable condition. If the property ceases to be serviceable, it shall be returned to the Director for disposition.

(f) Condition of Concession Facilities

The Concessioner has inspected the Concession Facilities and any assigned government personal property, is thoroughly acquainted with their condition, and accepts the Concession Facilities, and any assigned government personal property, ''as is.''

(g) Utilities Provided by the Director

The Director may provide utilities to the Concessioner for use in connection with the operations required or authorized hereunder when available and at rates to be determined in accordance with Applicable Laws.

(h) Utilities Not Provided by the Director

If the Director does not provide utilities to the Concessioner, the Concessioner shall, with the written approval of the Director and under any requirements that the Director shall prescribe, secure necessary utilities at its own expense from sources outside the Area or shall install the utilities within the Area with the written permission of the Director, subject to the following conditions:

(1) Any water rights deemed necessary by the Concessioner for use of water on Area or other federal lands must be acquired at the Concessioner's expense in accordance with applicable State procedures and law. Upon expiration or termination of this CONTRACT for any reason, the Concessioner must assign these water rights to the United States without compensation, and these water rights will become the property of the United States;

(2) If requested by the Director, the Concessioner must provide to the Director any utility service provided by the Concessioner under this section to such extent as will not unreasonably restrict anticipated use by the Concessioner. Unless otherwise agreed by the Concessioner and the Director in writing, the rate per unit charged the Director for such service shall be approximately the average cost per unit of providing such service; and

(3) All appliances and machinery to be used in connection with the privileges granted in this subsection, as well as the plans for location and installation of such appliances and machinery, shall first be approved by the Director.

Sec. 9. Construction or Installation of Real Property Improvements

(a) Construction of Real Property Improvements

The Concessioner may construct or install upon lands assigned to the Concessioner under this CONTRACT only those real property improvements that are determined by the Director to be necessary and appropriate for the conduct by the Concessioner of the visitor services required and/or authorized under this CONTRACT. Construction or installation of real property improvements may occur only after the written approval by the Director of their location, plans, and specifications. The form and content of the application and the procedures for such approvals, as may be modified by the Director from time to time, are set forth in Exhibit F. All real property improvements constructed or installed by the Concessioner will immediately become the property of the United States and be considered Concession Facilities.

(b) Removal of Real Property Improvements

(1) The Concessioner may not remove, dismantle, or demolish real property improvements in the Area without the prior approval of the Director.

(2) Any salvage resulting from the authorized removal, severance or demolition of a real property improvement within the Area shall be the property of the United States.

(3) In the event that an assigned real property improvement is removed, abandoned, demolished, or substantially destroyed and no other improvement is constructed on the site, the Concessioner, at its expense, shall promptly, upon the request of the Director, restore the site as nearly as practicable to its original condition.

(c) Leasehold Surrender Interest

(1) This CONTRACT hereby provides the Concessioner, subject to all applicable definitions, requirements and limitations of this CONTRACT and Exhibit A, a Leasehold Surrender Interest in Capital Improvements constructed by the Concessioner under the terms of this CONTRACT, including, but not limited to, those Capital Improvements constructed as part of the Concession Facilities Improvement Program and those Capital Improvements which result from the Major Rehabilitation of an existing real property improvement. Upon completion of a Major Rehabilitation by the Concessioner, an existing real property improvement assigned to the Concessioner in which the Concessioner had no Leasehold Surrender Interest prior to the Major Rehabilitation shall be considered as a Capital Improvement for all purposes of this CONTRACT.

(2) This CONTRACT may provide the Concessioner a Leasehold Surrender Interest in real property improvements resulting from possessory interest obtained under the terms of a possessory interest concession contract. Exhibit G describes the real property improvements, if any, in which the Concessioner has such a Leasehold Surrender Interest and states the value of this Leasehold Surrender Interest as of the effective date of this CONTRACT.

(3) The Concessioner shall not obtain Leasehold Surrender Interest under this CONTRACT except as may be provided in Exhibit A and Exhibit F. Among other matters, no Leasehold Surrender Interest shall be obtained as a result of expenditures from the Repair and Maintenance Reserve described in this CONTRACT, and this CONTRACT does not provide a Leasehold Surrender Interest as a result of expenditures for repair and maintenance of Concession Facilities of any nature.

(d) Concession Facilities Improvement Program

(1) The Concessioner shall undertake and complete an improvement program (hereinafter ''Concession Facilities Improvement Program'') costing not less than $_____ as adjusted for each project to reflect par value in the year of actual construction in accordance with the appropriate indexes of the Department of Labor's CPI–U Index, as published by the Department of Labor.

(2) The Concession Facilities Improvement Program shall include:

[Provide detailed description of the Concession Facilities Improvement Program.]

(3) The Concessioner shall commence construction under the Concession Facilities Improvement Program on or before _____ in a manner that demonstrates to the satisfaction of the Director that the Concessioner is in good faith carrying the Concession Facilities Improvement Program forward reasonably under the circumstances. No construction may begin until the Concessioner receives written approval from the Director of plans and specifications in accordance with Exhibit F. During the period of construction, the Concessioner shall provide the Director with such evidence or documentation, as may be satisfactory to the Director, to demonstrate that the Concession Facilities Improvement Program duly is being carried forward.

(4) The Concessioner shall complete and have the real property improvements available for public use on or before _____. The Director may extend this date in circumstances where the Director determines that the delay resulted from events beyond the control of the Concessioner.

Sec. 10. Maintenance

(a) Maintenance Obligation

The Concessioner shall be solely responsible for maintenance, repairs, housekeeping, and groundskeeping for

all Concession Facilities to the satisfaction of the Director.

(b) Maintenance Plan

For these purposes, the Director, acting through the Superintendent, shall undertake appropriate inspections, and shall establish and revise, as necessary, a Maintenance Plan consisting of specific maintenance requirements which shall be adhered to by the Concessioner. The initial Maintenance Plan is set forth in Exhibit H. The Director in his discretion may make reasonable modifications to the Maintenance Plan from time to time after consultation with the Concessioner. Such modifications shall be in furtherance of the purposes of this CONTRACT and shall not be inconsistent with the terms and conditions of the main body of this CONTRACT.

(c) Repair and Maintenance Reserve

[No Repair and Maintenance Reserve is included in this CONTRACT.] OR

(1) The Concessioner shall establish and manage a Repair and Maintenance Reserve. The funds in this Reserve shall be used to carry out, on a project basis in accordance with Exhibits F and H, repair and maintenance of Concession Facilities that are non-recurring within a seven-year time frame. Such projects may include repair or replacement of foundations, building frames, window frames, sheathing, subfloors, drainage, rehabilitation of building systems such as electrical, plumbing, built-in heating and air conditioning, roof replacement and similar projects. Projects will be carried out by the Concessioner as the Director shall direct in writing in advance of any expenditure being made and in accordance with project proposals approved by the Director. No projects may be commenced until the Concessioner receives written approval from the Director.

(2) Projects paid for with funds from the Repair and Maintenance Reserve will not include routine, operational maintenance of facilities or housekeeping and groundskeeping activities. Nothing in this section shall lessen the responsibility of the Concessioner to carry out the maintenance and repair of Concession Facilities or housekeeping and groundskeeping responsibilities as required by this CONTRACT from Concessioner funds exclusive of the funds contained in the Repair and Maintenance Reserve.

(3) The Concessioner shall establish within its accounting system a Repair and Maintenance Reserve. The Concessioner shall debit to this Reserve, within fifteen (15) days after the last day of each month that the Concessioner operates a sum equal to: _____ percent (_____%) of the Concessioner's gross receipts for the previous month. If the Concessioner fails to make timely debits to the Repair and Maintenance Reserve, the Director may terminate this CONTRACT for default or may require the Concessioner to post a bond in an amount equal to the estimated annual Repair and Maintenance Reserve allocation, based on the preceding year's gross receipts.

(4) The balance in the Repair and Maintenance Reserve shall be available for projects in accordance with the Reserve's purpose. For all expenditures made for each project from the Repair and Maintenance Reserve, the Concessioner shall maintain auditable records including invoices, billings, canceled checks, and other documentation satisfactory to the Director. Failure to expend Repair and Maintenance Reserve Funds when directed by the Director shall be considered as a material breach of this CONTRACT for which the Director may seek monetary damages and other legal relief, including, without limitation, termination of this CONTRACT.

(5) Repair and Maintenance Reserve funds shall not be used for a major rehabilitation as defined in this CONTRACT. The Concessioner shall obtain no ownership, Leasehold Surrender Interest, or other compensable interest as a consequence of the expenditure of Repair and Maintenance Reserve funds.

(6) Any Repair and Maintenance Reserve funds not duly expended by the Concessioner as of the termination or expiration of this CONTRACT shall be retained by the Concessioner (subject to otherwise applicable terms and conditions of this CONTRACT).

Sec. 11. Fees

(a) Franchise Fee

(1) For the term of this CONTRACT, the Concessioner shall pay to the Director for the privileges granted under this CONTRACT a franchise fee equal to _____ percent (_____ %) of the Concessioner's gross receipts for the preceding year or portion of a year.

(2) Neither the Concessioner nor the Director shall have a right to an adjustment of the fees except as provided below. The Concessioner has no right to waiver of the fee under any circumstances.

(b) Payments Due

(1) The franchise fee shall be due on a monthly basis at the end of each month and shall be paid by the Concessioner in such a manner that the Director shall receive payment within fifteen (15) days after the last day of each month that the Concessioner operates. This monthly payment shall include the franchise fee equal to the specified percentage of gross receipts for the preceding month.

(2) The Concessioner shall pay any additional fee amounts due at the end of the operating year as a result of adjustments at the time of submission of the Concessioner's Annual Financial Report. Overpayments shall be offset against the following year's fees. In the event of termination or expiration of this CONTRACT, overpayments will first be offset against any amounts due and owing the Government, and the remainder will be paid to the Concessioner.

(3) All franchise fee payments consisting of $10,000 or more, shall be deposited electronically by the Concessioner using the Treasury Financial Communications System.

(c) Interest

An interest charge will be assessed on overdue amounts for each thirty (30) day period, or portion thereof, that payment is delayed beyond the fifteen (15) day period provided for above. The percent of interest charged will be based on the current value of funds to the United States Treasury as published quarterly in the Treasury Fiscal Requirements Manual. The Director may also impose penalties for late payment to the extent authorized by Applicable Law.

(d) Adjustment of Franchise Fee

(1) The Concessioner or the Director may request, in the event that either considers that extraordinary, unanticipated changes have occurred after the effective date of this CONTRACT, a reconsideration and possible subsequent adjustment of the franchise fee established in this section. For the purposes of this section, the phrase ''extraordinary, unanticipated changes'' shall mean extraordinary, unanticipated changes from the conditions existing or reasonably anticipated before the effective date of this CONTRACT which have or will significantly affect the probable value of the privileges granted to the Concessioner by this CONTRACT. For the purposes of this section, the phrase ''probable value'' means a reasonable opportunity for net profit in relation to capital invested and the obligations of this CONTRACT.

(2) The Concessioner or the Director must make a request for a

reconsideration by mailing, within sixty (60) days from the date that the party becomes aware, or should have become aware, of the possible extraordinary, unanticipated changes, a written notice to the other party that includes a description of the possible extraordinary, unanticipated changes and why the party believes they have affected or will significantly affect the probable value of the privileges granted by this CONTRACT.

(3) If the Concessioner and the Director agree that extraordinary, unanticipated changes have occurred, the Concessioner and the Director will undertake good faith negotiations as to an appropriate adjustment of the franchise fee.

(4) The negotiation will last for a period of sixty (60) days from the date the Concessioner and the Director agree that extraordinary, unanticipated changes occurred. If the negotiation results in agreement as to an adjustment (up or down) of the franchise fee within this period, the franchise fee will be adjusted accordingly, prospectively as of the date of agreement.

(5) If the negotiation does not result in agreement as to the adjustment of the franchise fee within this sixty (60) day period, then either the Concessioner or the Director may request binding arbitration to determine the adjustment to franchise fee in accordance with this section. Such a request for arbitration must be made by mailing written notice to the other party within fifteen (15) days of the expiration of the sixty (60) day period.

(6) Within thirty (30) days of receipt of such a written notice, the Concessioner and the Director shall each select an arbiter. These two arbiters, within thirty (30) days of selection, must agree to the selection of a third arbiter to complete the arbitration panel. Unless otherwise agreed by the parties, the arbitration panel shall establish the procedures of the arbitration. Such procedures must provide each party a fair and equal opportunity to present its position on the matter to the arbitration panel.

(7) The arbitration panel shall consider the written submissions and any oral presentations made by the Concessioner and the Director and provide its decision on an adjusted franchise fee (up, down or unchanged) that is consistent with the probable value of the privileges granted by this CONTRACT within sixty (60) days of the presentations.

(8) Any adjustment to the franchise fee resulting from this Section shall be prospective only.

(9) Any adjustment to the franchise fee will be embodied in an amendment to this CONTRACT.

(10) During the pendency of the process described in this Section, the Concessioner shall continue to make the established franchise fee payments required by this CONTRACT.

Sec. 12. Indemnification and Insurance

(a) Indemnification

The Concessioner agrees to assume liability for and does hereby agree to save, hold harmless, protect, defend and indemnify the United States of America, its agents and employees from and against any and all liabilities, obligations, losses, damages or judgments (including without limitation penalties and fines), claims, actions, suits, costs and expenses (including without limitation attorneys fees and experts' fees) of any kind and nature whatsoever on account of fire or other peril, bodily injury, death or property damage, or claims for bodily injury, death or property damage of any nature whatsoever, and by whomsoever made, in any way connected with or arising out of the activities of the Concessioner, its employees, agents or contractors under this CONTRACT. This indemnification shall survive the termination or expiration of this CONTRACT.

(b) Insurance in General

(1) The Concessioner shall obtain and maintain during the entire term of this CONTRACT at its sole cost and expense, the types and amounts of insurance coverage necessary to fulfill the obligations of this CONTRACT as determined by the Director. The initial insurance requirements are set forth below and in Exhibit I. Any changed or additional requirements that the Director determines necessary must be reasonable and consistent with the types and coverage amounts of insurance a prudent businessperson would purchase in similar circumstances. The Director shall approve the types and amounts of insurance coverage purchased by the Concessioner.

(2) The Director will not be responsible for any omissions or inadequacies of insurance coverages and amounts in the event the insurance purchased by the Concessioner proves to be inadequate or otherwise insufficient for any reason whatsoever.

(3) At the request of the Director, the Concessioner shall at the time insurance is first purchased and annually thereafter, provide the Director with a Certificate of Insurance that accurately details the conditions of the policy as evidence of compliance with this section. The Concessioner shall provide the Director immediate written notice of any material change in the Concessioner's insurance program hereunder, including without limitation, cancellation of any required insurance coverages.

(c) Commercial Public Liability

(1) The Concessioner shall provide commercial general liability insurance against claims arising out of or resulting from the acts or omissions of the Concessioner or its employees, agents or contractors, in carrying out the activities and operations required and/or authorized under this CONTRACT.

(2) This insurance shall be in the amount commensurate with the degree of risk and the scope and size of the activities required and/or authorized under this CONTRACT, as more specifically set forth in Exhibit I. Furthermore, the commercial general liability package shall provide no less than the coverages and limits described in Exhibit I.

(3) All liability policies shall specify that the insurance company shall have no right of subrogation against the United States of America and shall provide that the United States of America is named an additional insured.

(4) From time to time, as conditions in the insurance industry warrant, the Director may modify Exhibit I to revise the minimum required limits or to require additional types of insurance, provided that any additional requirements must be reasonable and consistent with the types of insurance a prudent businessperson would purchase in similar circumstances.

(d) Property Insurance

(1) In the event of damage or destruction, the Concessioner will repair or replace those Concession Facilities and personal property utilized by the Concessioner in the performance of the Concessioner's obligations under this CONTRACT.

(2) For this purpose, the Concessioner shall provide fire and extended insurance coverage on Concession Facilities for all or part of their replacement cost as specified in Exhibit I in amounts no less than the Director may require during the term of the CONTRACT. The minimum values currently in effect are set forth in Exhibit I.

(3) Commercial property insurance shall provide for the Concessioner and the United States of America to be named insured as their interests may appear.

(4) In the event of loss, the Concessioner shall use all proceeds of such insurance to repair, rebuild, restore or replace Concession Facilities and/or personal property utilized in the Concessioner's operations under this CONTRACT, as directed by the Director. Policies may not contain provisions limiting insurance proceeds to in situ replacement. The lien provision of Section 13 shall apply to such insurance proceeds. The Concessioner shall not be relieved of its obligations under subsection (d)(1) because insurance proceeds are not sufficient to repair or replace damaged or destroyed property.

(5) Insurance policies that cover Concession Facilities shall contain a loss payable clause approved by the Director which requires insurance proceeds to be paid directly to the Concessioner without requiring endorsement by the United States. The use of insurance proceeds for repair or replacement of Concession Facilities will not alter their character as properties of the United States and, notwithstanding any provision of this CONTRACT to the contrary, the Concessioner shall gain no ownership, Leasehold Surrender Interest or other compensable interest as a result of the use of these insurance proceeds.

(6) The commercial property package shall include the coverages and amounts described in Exhibit I.

Sec. 13. Bonds and Liens

(a) Bonds

The Director may require the Concessioner to furnish appropriate forms of bonds in amounts reasonable in the circumstances and acceptable to the Director, in order to ensure faithful performance of the Concessioner's obligations under this CONTRACT.

(b) Lien

As additional security for the faithful performance by the Concessioner of its obligations under this CONTRACT, and the payment to the Government of all damages or claims that may result from the Concessioner's failure to observe any such obligations, the Government shall have at all times the first lien on all assets of the Concessioner within the Area, including, but not limited to, all personal property of the Concessioner used in performance of the CONTRACT hereunder within the Area and any Leasehold Surrender Interest of the Concessioner.

Sec. 14. Accounting Records and Reports

(a) Accounting System

(1) The Concessioner shall maintain an accounting system under which its accounts can be readily identified with its system of accounts classification. Such accounting system shall be capable of providing the information required by this CONTRACT, including but not limited to the Concessioner's repair and maintenance obligations. The Concessioner's system of accounts classification shall be directly related to the Concessioner Annual Financial Report Form issued by the Director.

(2) If the Concessioner's annual gross receipts are $250,000 or more, the Concessioner must use the accrual accounting method.

(3) In computing net profits for any purposes of this CONTRACT, the Concessioner shall keep its accounts in such manner that there can be no diversion or concealment of profits or expenses in the operations authorized under this CONTRACT by means of arrangements for the procurement of equipment, merchandise, supplies or services from sources controlled by or under common ownership with the Concessioner or by any other device.

(b) Annual Financial Report

(1) The Concessioner shall submit annually as soon as possible but not later than one hundred twenty (120) days after the last day of its fiscal year a financial statement for the preceding fiscal year or portion of a year as prescribed by the Director (''Concessioner Annual Financial Report'').

(2) If the annual gross receipts of the Concessioner are in excess of $1,000,000, the financial statements shall be audited by an independent Certified Public Accountant in accordance with Generally Accepted Auditing Standards (GAAS) and procedures promulgated by the American Institute of Certified Public Accountants.

(3) If annual gross receipts are between $250,000, and $1,000,000, the financial statements shall be reviewed by an independent Certified Public Accountant in accordance with Generally Accepted Auditing Standards (GAAS) and procedures promulgated by the American Institute of Certified Public Accountants.

(4) If annual gross receipts are less than $250,000, the financial statements may be prepared without involvement by an independent Certified Public Accountant, unless otherwise directed by the Director.

(c) Other Financial Reports

(1) *Balance Sheet.* Within ninety (90) days of the execution of this CONTRACT or its effective date, whichever is later, the Concessioner shall submit to the Director a balance sheet as of the beginning date of the term of this CONTRACT. The balance sheet shall be audited or reviewed, as determined by the annual gross receipts, by an independent Certified Public Accountant. The balance sheet shall be accompanied by a schedule that identifies and provides details for all capital improvements in which the Concessioner claims a Leasehold Surrender Interest. The schedule must describe these capital improvements in detail showing for each such capital improvement the date acquired, constructed or installed.

(2) *Statements of Reserve Activity.* [No Repair and Maintenance Reserve is included in this CONTRACT.] OR

[The Concessioner shall submit annually, not later than one hundred twenty (120) days after the end of the Concessioner's accounting year, a statement reflecting total activity in the Maintenance Reserve for the preceding accounting year. The statement must reflect monthly inflows and outflows on a project by project basis.]

Sec. 15. Other Reporting Requirements

The following describes certain other reports required under this CONTRACT:

(a) Insurance Certification

As specified in Section 12, the Concessioner shall, at the request of the Director, provide the Director with a Certificate of Insurance for all insurance coverages related to its operations under this CONTRACT. The Concessioner shall give the Director immediate written notice of any material change in its insurance program, including without limitation, any cancellation of required insurance coverages.

(b) Environmental Reporting

The Concessioner shall submit environmental reports as specified in Section 6 of this CONTRACT, and as otherwise required by the Director under the terms of this CONTRACT.

(c) Miscellaneous Reports and Data

The Director from time to time may require the Concessioner to submit other reports and data regarding its performance under the CONTRACT or otherwise, including, but not limited to, operational information.

Sec. 16. Suspension, Termination, or Expiration

(a) Suspension

The Director may temporarily suspend operations under this CONTRACT in whole or in part in order to protect Area visitors or to protect, conserve and preserve Area resources. No compensation of any nature shall be due the Concessioner by the Director in the event of a suspension of operations, including, but not limited to, compensation for losses based on lost income, profit, or the necessity to make expenditures as a result of the suspension.

(b) Termination

(1) The Director may terminate this CONTRACT at any time in order to protect Area visitors, protect, conserve, and preserve Area resources, or to limit visitor services in the Area to those that continue to be necessary and appropriate.

(2) The Director may terminate this CONTRACT if the Director determines that the Concessioner has materially breached any requirement of this CONTRACT, including, but not limited to, the requirement to maintain and operate visitor services to the satisfaction of the Director, the requirement to provide only those visitor services required or authorized by the Director pursuant to this CONTRACT, the requirement to pay the established franchise fee, the requirement to prepare and comply with an Environmental Management Program, the requirement to duly expend funds from the repair and maintenance reserve and the requirement to comply with Applicable Laws.

(3) In the event of a breach of the CONTRACT, the Director will provide the Concessioner an opportunity to cure by providing written notice to the Concessioner of the breach. In the event of a monetary breach, the Director will give the Concessioner a fifteen (15) day period to cure the breach. If the breach is not cured within that period, then the Director may terminate the CONTRACT for default. In the event of a nonmonetary breach, if the Director considers that the nature of the breach so permits, the Director will give the Concessioner thirty (30) days to cure the breach, or to provide a plan, to the satisfaction of the Director, to cure the breach over a specified period of time. If the breach is not cured within this specified period of time, the Director may terminate the CONTRACT for default. Notwithstanding this provision, repeated breaches (two or more) of the same nature shall be grounds for termination for default without a cure period. In the event of a breach of any nature, the Director may suspend the Concessioner's operations as appropriate in accordance with Section 16(a).

(4) The Director may terminate this CONTRACT upon the filing or the execution of a petition in bankruptcy by or against the Concessioner, a petition seeking relief of the same or different kind under any provision of the Bankruptcy Act or its successor, an assignment by the Concessioner for the benefit of creditors, a petition or other proceeding against the Concessioner for the appointment of a trustee, receiver, or liquidator, or, the taking by any person or entity of the rights granted by this CONTRACT or any part thereof upon execution, attachment or other process of law or equity. The Director may terminate this CONTRACT if the Director determines that the Concessioner is unable to perform the terms of CONTRACT due to bankruptcy or insolvency.

(5) Termination of this CONTRACT for any reason shall be by written notice to the Concessioner.

(c) Notice of Bankruptcy or Insolvency

The Concessioner must give the Director immediate notice (within five (5) days) after the filing of any petition in bankruptcy, filing any petition seeking relief of the same or different kind under any provision of the Bankruptcy Act or its successor, or making any assignment for the benefit of creditors. The Concessioner must also give the Director immediate notice of any petition or other proceeding against the Concessioner for the appointment of a trustee, receiver, or liquidator, or, the taking by any person or entity of the rights granted by this CONTRACT or any part thereof upon execution, attachment or other process of law or equity. For purposes of the bankruptcy statutes, NPS considers that this CONTRACT is not a lease but an executory contract exempt from inclusion in assets of Concessioner pursuant to 11 U.S.C. 365.

(d) Requirements in the Event of Termination or Expiration

(1) In the event of termination of this CONTRACT for any reason or expiration of this CONTRACT, the total compensation due the Concessioner for such termination or expiration shall be as described in Section 17 of this CONTRACT. No other compensation of any nature shall be due the Concessioner in the event of a termination or expiration of this CONTRACT, including, but not limited to, compensation for losses based on lost income, profit, or the necessity to make expenditures as a result of the termination.

(2) Upon termination of this CONTRACT for any reason, or upon its expiration, and except as otherwise provided in this section, the Concessioner shall, at the Concessioner's expense, promptly vacate the Area, remove all of the Concessioner's personal property, repair any injury occasioned by installation or removal of such property, and ensure that Concession Facilities are in at least as good condition as they were at the beginning of the term of this CONTRACT, reasonable wear and tear excepted. The removal of such personal property must occur within thirty (30) days after the termination of this CONTRACT for any reason or its expiration (unless the Director in particular circumstances requires immediate removal).

(3) To avoid interruption of services to the public upon termination of this CONTRACT for any reason, or upon its expiration, the Concessioner, upon the request of the Director, shall consent to the use by another operator of the Concessioner's personal property, excluding inventories if any, not including current or intangible assets, for a period of time not to exceed one (1) year from the date of such termination or expiration. The other operator shall pay the Concessioner an annual fee for use of such property, prorated for the period of use, in the amount of the annual depreciation of such property, plus a return on the book value of such property equal to the prime lending rate, as published by the Federal Reserve System Board of Governors, effective on the date the operator assumes managerial and operational responsibilities. In such circumstances, the method of depreciation applied shall be either straight line depreciation or depreciation as shown on the Concessioner's Federal income tax return, whichever is less. To avoid interruption of services to the public upon termination of this CONTRACT for any reason or its expiration, the Concessioner shall, if requested by the Director, sell its existing inventory to another operator at the purchase price as shown on applicable invoices.

Sec. 17. Compensation

(a) Just Compensation

The compensation provided by this Section shall constitute full and just compensation to the Concessioner for

all losses and claims occasioned by the circumstances described below.

(b) Compensation for CONTRACT Expiration or Termination

If, for any reason, including CONTRACT expiration or termination, the Concessioner shall cease to be authorized by the Director to conduct operations under this CONTRACT, the Concessioner shall convey to a person designated by the Director (including the Director if appropriate) any Leasehold Surrender Interest it has under the terms of this CONTRACT and the Director shall, subject to the terms and conditions of this CONTRACT, assure that the Concessioner is paid the Leasehold Surrender Interest Value.

(c) Procedures for Establishing the Value of a Leasehold Surrender Interest

At any time during the term of this CONTRACT, the Concessioner shall, when requested by the Director, enter into negotiations with the Director as to the value of the Concessioner's Leasehold Surrender Interest under this CONTRACT. In the event that such negotiations fail to determine an agreed upon value within a reasonable period of time as determined by the Director, the Director or the Concessioner may initiate arbitration proceedings to determine such value upon written request to the other party. Such arbitration proceedings shall be conducted in accordance with the arbitration procedures set forth in Exhibit A. In these circumstances, the Concessioner and the Director shall each select an arbiter. The two arbiters, within thirty (30) days of selection, must agree to the selection of a third arbiter to complete the arbitration panel in accordance with Exhibit A. The arbitration panel shall consider the written submissions and any oral presentations made by the Concessioner and the Director and shall determine the value of the Leasehold Surrender Interest consistent with the terms of this CONTRACT, including without limitation Exhibit A. The arbitration panel shall also provide a means to calculate the change in the value of such Leasehold Surrender Interest as may occur for up to two (2) years from the date of the initial determination. The determination of the arbitration panel shall be binding on the Director and the Concessioner.

(d) Compensation for Personal Property

No compensation is due the Concessioner from the Director or a successor concessioner for the Concessioner's personal property used in operations under this CONTRACT. However, the Director or a successor concessioner may purchase such personal property from the Concessioner subject to mutually agreed upon terms. Personal property not removed from the Area by the Concessioner in accordance with the terms of this CONTRACT shall be considered abandoned property subject to disposition by the Director, at full cost and expense of the Concessioner, in accordance with Applicable Laws. Any cost or expense incurred by the Director as a result of such disposition may be offset from any amounts owed to the Concessioner by the Director to the extent consistent with Applicable Laws.

Sec. 18. Assignment, Sale or Encumbrance of Interests

(a) This CONTRACT is subject to the requirements of Applicable Laws, including, without limitation, 36 CFR Part 51, with respect to proposed assignments and encumbrances, as those terms are defined by Applicable Laws. Failure by the Concessioner to comply with Applicable Laws is a material breach of this CONTRACT for which the Director may terminate this CONTRACT for default. The Director shall not be obliged to recognize any right of any person or entity to an interest in this CONTRACT of any nature, including, but not limited to, Leasehold Surrender Interest or operating rights under this CONTRACT, if obtained in violation of Applicable Laws.

(b) The Concessioner shall advise any person(s) or entity proposing to enter into a transaction which may be subject to Applicable Laws, including without limitation, 36 CFR Part 51, of the requirements of Applicable Law and this CONTRACT.

Sec. 19. General Provisions

(a) The Director and Comptroller General of the United States, or any of their duly authorized representatives, shall have access to the records of the Concessioner as provided by the terms of Applicable Laws.

(b) All information required to be submitted to the Director by the Concessioner pursuant to this CONTRACT is subject to public release by the Director to the extent provided by Applicable Laws.

(c) Subconcession or other third party agreements, including management agreements, for the provision of visitor services required and/or authorized under this CONTRACT are not permitted.

(d) The Concessioner is not entitled to be awarded or to have negotiating rights to any Federal procurement or service contract by virtue of any provision of this CONTRACT.

(e) Any and all taxes or assessments of any nature that may be lawfully imposed by any State or its political subdivisions upon the property or business of the Concessioner shall be paid promptly by the Concessioner.

(f) No member of, or delegate to, Congress or Resident Commissioner shall be admitted to any share or part of this CONTRACT or to any benefit that may arise from this CONTRACT but this restriction shall not be construed to extend to this CONTRACT if made with a corporation or company for its general benefit.

(g) This CONTRACT is subject to the provisions of 43 CFR, Subtitle A, Subpart D, concerning nonprocurement debarment and suspension. The Director may recommend that the Concessioner be debarred or suspended in accordance with the requirements and procedures described in those regulations, as they are effective now or may be revised in the future.

(h) This CONTRACT contains the sole and entire agreement of the parties. No oral representations of any nature form the basis of or may amend this CONTRACT. This CONTRACT may be extended, renewed or amended only when agreed to in writing by the Director and the Concessioner.

(i) This CONTRACT does not grant rights or benefits of any nature to any third party.

(j) The invalidity of a specific provision of this CONTRACT shall not affect the validity of the remaining provisions of this CONTRACT.

(k) Waiver by the Director or the Concessioner of any breach of any of the terms of this CONTRACT by the other party shall not be deemed to be a waiver or elimination of such term, nor of any subsequent breach of the same type, nor of any other term of the CONTRACT. The subsequent acceptance of any payment of money or other performance required by this CONTRACT shall not be deemed to be a waiver of any preceding breach of any term of the CONTRACT.

(l) Claims against the Director (to the extent subject to 28 U.S.C. 2514) arising from this CONTRACT shall be forfeited to the Director by any person who corruptly practices or attempts to practice any fraud against the United States in the proof, statement, establishment, or allowance thereof within the meaning of 28 U.S.C. 2514.

In Witness Whereof, the duly authorized representatives of the parties have executed this CONTRACT as of the_____day of __ __,____.

Concessioner

United States of America

BY_____
(Title),
(Company Name).
BY_____
Director,
National Park Service.

[Corporations]

ATTEST:
BY:_____

TITLE:_____

[Sole Proprietorship]

WITNESSES:
NAME_____
ADDRESS_____

TITLE_____
NAME_____

ADDRESS_____

TITLE_____

[Partnership]

WITNESSES AS TO EACH:
[Concessioner]
NAME_____ _____
ADDRESS
(NAME)
NAME_____
ADDRESS _____
NAME

Exhibit A

Leasehold Surrender Interest

This Exhibit A to this CONTRACT establishes certain terms and conditions of the CONTRACT regarding the nature, scope and applicable conditions of leasehold surrender interest. In event of any inconsistency between this Exhibit A and Exhibit F of this CONTRACT this Exhibit A shall prevail.

Section 1. Definitions

''Arbitration'' means binding arbitration conducted by an arbitration panel. All arbitration proceedings conducted under the authority of this Exhibit A will utilize the following procedures unless otherwise agreed by the Concessioner and the Director. One member of the arbitration panel will be selected by the Concessioner, one member will be selected by the Director, and the third (neutral) member will be selected by the two party-appointed members. The neutral arbiter must be a licensed real estate appraiser. The expenses of the neutral arbiter and other associated common costs of the arbitration will be borne equally by the Concessioner and the Director. The arbitration panel will adopt procedures that treat each party equally, give each party the opportunity to be heard, and give each party a fair opportunity to present its case. Determinations must be made by a majority of the members of the panel and will be binding on the Concessioner and the Director.

A''capital improvement'' is a structure, fixture, or non-removable equipment provided by the Concessioner pursuant to the terms of this CONTRACT and located on lands of the United States within the area. A capital improvement does not include any interest in land. Additionally, a capital improvement does not include any interest in personal property of any kind including, but not limited to, vehicles, boats, barges, trailers, or other objects, regardless of size, unless an item of personal property becomes a fixture as defined in this Exhibit A.

''Construction cost'' of a capital improvement means the total of the incurred eligible direct and indirect costs necessary for constructing or installing the capital improvement that are capitalized by the concessioner in accordance with Generally Accepted Accounting Principals (GAAP).

''Consumer Price Index'' means the national ''Consumer Price Index—All Urban Consumers'' published by the Department of Labor. If this index ceases to be published, the Director will designate another regularly published cost-of-living index approximating the national Consumer Price Index.

''Depreciation'' means the loss of value in a capital improvement as evidenced by the condition and prospective serviceability of the capital improvement in comparison with a new unit of like kind.

''Eligible direct costs'' means the sum of all incurred capitalized costs (in amounts no higher than those prevailing in the locality of the project), that are necessary both for the construction of a capital improvement and are typically elements of a construction contract. Eligible direct costs may include, without limitation, the costs of (if capitalized in accordance with GAAP and in amounts no higher than those prevailing in the locality of the project): building permits; materials, products and equipment used in construction; labor used in construction; security during construction; contractor's shack and temporary fencing; material storage facilities; power line installation and utility costs during construction; performance bonds; and contractor's (and subcontractor's) profit and overhead (including job supervision, worker's compensation insurance and fire, liability, and unemployment insurance).

''Eligible indirect costs'' means, except as provided in the last sentence of this definition, the sum of all other incurred capitalized costs (in amounts no higher than those prevailing in the locality of the project) necessary for the construction of a capital improvement. Eligible indirect costs may include, without limitation, the costs of (if capitalized in accordance with GAAP and in amounts no higher than those prevailing in the locality of the project): architectural and engineering fees for plans, plan checks; surveys to establish building lines and grades; environmental studies; if the project is financed, the points, fees or service charges and interest on construction loans; all risk insurance expenses and ad valorem taxes during construction. The actual capitalized administrative expenses (in amounts no higher than those prevailing in the locality of the project did) of the Concessioner for direct, on-site construction inspection are eligible indirect costs. Other administrative expenses of the Concessioner are not eligible indirect costs.

''Fixtures and non-removable equipment'' are manufactured items of personal property of independent form and utility necessary for the basic functioning of a structure that are affixed to and considered to be part of the structure such that title is with the Director as real property once installed. Fixtures and non-removable equipment do not include building materials (e.g., wallboard, flooring, concrete, cinder blocks, steel beams, studs, window frames, windows, rafters, roofing, framing, siding, lumber, insulation, wallpaper, paint, etc.). Because of their special circumstances, floating docks (but not other types of floating property) that may be constructed by the Concessioner pursuant to the terms of this CONTRACT are considered to be non-removable equipment for leasehold surrender interest purposes only. Except as otherwise indicated in Exhibit A, the term ''fixture'' includes the term ''non-removable equipment.''

''Leasehold surrender interest'' solely means a right to payment in accordance with this CONTRACT for related capital improvements that the Concessioner makes or provides within the area on lands owned by the United States pursuant to the terms and conditions of this CONTRACT. The existence of a leasehold surrender interest does not give the Concessioner, or any other person, any right to conduct business in a park area, to utilize the related capital improvements, or to prevent the Director or another person from utilizing the related capital improvements. The existence of a leasehold surrender interest does not include any interest in the land on which the related capital improvements are located.

''Leasehold surrender interest value'' means the amount of compensation the

Concessioner is entitled to be paid for a leasehold surrender interest in capital improvements in accordance with this CONTRACT. The leasehold surrender interest value in existing capital improvements under the terms of this CONTRACT is an amount equal to:

(1) The initial construction cost of the related capital improvement;

(2) Adjusted by (increased or decreased) the same percentage increase or decrease as the percentage increase or decrease in the Consumer Price Index from the date the Director approves the substantial completion of the construction of the related capital improvement to the date of payment of the leasehold surrender interest value;

(3) Less depreciation of the related capital improvement on the basis of its condition as of the date of termination or expiration of this CONTRACT, or, if applicable, the date on which the Concessioner ceases to utilize a related capital improvement (*e.g.,* where the related capital improvement is taken out of service by the Director pursuant to the terms of this CONTRACT).

''Major rehabilitation'' means a planned, comprehensive rehabilitation of an existing structure that:

(1) The Director approves in advance and determines is completed within 18 months from start of the rehabilitation work (unless a longer period of time is approved by the Director in special circumstances); and

(2) The construction cost of which exceeds fifty percent of the pre-rehabilitation value of the structure.

''Pre-rehabilitation value'' of an existing structure means the replacement cost of the structure less depreciation.

''Real property improvements'' means real property other than land, including, but not limited to, capital improvements.

''Related capital improvement'' or ''related fixture'' means a capital improvement in which the Concessioner has a leasehold surrender interest.

''Replacement cost'' means the estimated cost to reconstruct, at current prices, an existing structure with utility equivalent to the existing structure, using modern materials and current standards, design and layout.

''Structure'' means a building, dock, or similar edifice affixed to the land so as to be part of the real estate. A structure may include both constructed infrastructure (*e.g.,* water, power and sewer lines) and constructed site improvements (*e.g.,* paved roads, retaining walls, sidewalks, paved driveways, paved parking areas) that are permanently affixed to the land so as to be part of the real estate and that are in direct support of the use of a building, dock, or similar edifice. Landscaping that is integral to the construction of a structure is considered as part of a structure. Interior furnishings that are not fixtures are not part of a structure.

''Substantial completion of a capital improvement'' means the condition of a capital improvement construction project when the project is substantially complete and ready for use and/or occupancy.

Section 2. Obtaining a Leasehold Surrender Interest

The Concessioner will obtain leasehold surrender interest in capital improvements constructed in accordance with the terms and conditions of this CONTRACT, including, without limitation, the terms and conditions of this Exhibit A to the CONTRACT.

Section 3. Authorizing the Construction of a Capital Improvement

The Director may only authorize or require the Concessioner to construct capital improvements on area lands in accordance with the terms and conditions of this CONTRACT and for the conduct by the Concessioner of visitor services, including, without limitation, the construction of capital improvements necessary for the conduct of visitor services.

Section 4. Requirements for Beginning To Construct a Capital Improvement

Before beginning to construct any capital improvement, the Concessioner must obtain written approval from the Director in accordance with the terms of this CONTRACT, including the terms and conditions of this Exhibit A and Exhibit F. The request for approval must include appropriate plans and specifications for the capital improvement and any other information that the Director may specify. The request must also include an estimate of the total construction cost of the capital improvement. The estimate of the total construction cost must specify all elements of the cost in such detail as is necessary to permit the Director to determine that they are elements of construction cost as defined in this Exhibit. (The approval requirements of this and other sections of this CONTRACT also apply to any change orders to a capital improvement project and to any additions to a structure or replacement of fixtures as described in this CONTRACT.)

Section 5. Requirements After Substantial Completion of a Capital Improvement

Upon substantial completion of the construction of a capital improvement in which the Concessioner is to obtain a leasehold surrender interest, the Concessioner must provide the Director a detailed construction report in accordance with the terms and conditions of this CONTRACT, including without limitation Exhibit A and Exhibit F. The construction report must be supported by actual invoices of the capital improvement's construction cost together with, if requested by the Director, a written certification from a certified public accountant. The construction report must document, and any requested certification by the certified public accountant must certify, that all components of the construction cost were incurred and capitalized by the Concessioner in accordance with GAAP, and that all components are eligible direct or indirect construction costs as defined in this Exhibit. Invoices for additional construction costs of elements of the project that were not completed as of the date of substantial completion may subsequently be submitted to the Director for inclusion in the project's construction cost.

Section 6. Determining Construction Cost for Purposes of Leasehold Surrender Interest Value

After receiving the detailed construction report (and certification, if requested), from the Concessioner, the Director will review the report, certification and other information as appropriate to determine that the reported construction cost is consistent with the construction cost approved by the Director in advance of the construction and that all costs included in the construction cost are eligible direct or indirect costs as defined in this Exhibit A. The construction cost determined by the Director will be the construction cost for purposes of the leasehold surrender interest value in the related capital improvement unless the Concessioner requests arbitration of the construction cost under Section 7 of this Exhibit A. The Director may at any time amend a construction cost determination (subject to arbitration under Section 7 of this Exhibit A) if the Director determines that it was based on false, misleading or incomplete information.

Section 7. Arbitrating the Construction Cost of a Capital Improvement

If the Concessioner requests arbitration of the construction cost of a

capital improvement determined by the Director, the request must be made in writing to the Director within 3 months of the date of the Director's determination of construction cost under Section 6 of this Exhibit A. If a timely request is not made, the Director's determination of construction cost under Section 6 shall be the final determination of the construction cost. The arbitration procedures are described in Section 1 of this Exhibit A. The decision of the arbitration panel as to the construction cost of the capital improvement will be binding on the concessioner and the Director.

Section 8. Actions the Concessioner May or Must Take Regarding Leasehold Surrender Interest

The Concessioner:

(a) May encumber a leasehold surrender interest in accordance with the terms of this CONTRACT;

(b) Where applicable, must transfer its leasehold surrender interest in connection with any assignment, termination or expiration of this CONTRACT; and

(c) May waive or relinquish a leasehold surrender interest.

Section 9. Extinguishment of a Leasehold Surrender Interest

A leasehold surrender interest may not be extinguished by the expiration or termination of this CONTRACT and a leasehold surrender interest may not be taken for public use except on payment of just compensation. Payment of leasehold surrender interest value pursuant to the terms of this CONTRACT will constitute the payment of just compensation for leasehold surrender interest within the meaning of this CONTRACT and for all other purposes.

Section 10. Leasehold Surrender Interest Under a New Concession Contract

If the Concessioner under this CONTRACT is awarded a new concession contract by the Director, and the new concession contract continues a leasehold surrender interest in related capital improvements, then the Concessioner's leasehold surrender interest value (established as of the date of expiration or termination of this CONTRACT) in the related capital improvements will be continued as the initial value of the Concessioner's leasehold surrender interest under the terms of the new concession contract.

Section 11. Payment for Leasehold Surrender Interest if the Concessioner is not Awarded a New Concession Contract

(a) If the Concessioner is not awarded a new concession contract after expiration or termination of this CONTRACT, or, the Concessioner, prior to such termination or expiration, ceases to utilize under the terms of this CONTRACT capital improvements in which the Concessioner has a leasehold surrender interest, the Concessioner will be entitled to be paid its leasehold surrender interest value in the related capital improvements. The leasehold surrender interest will not be transferred until payment of the leasehold surrender interest value. The date for payment of the leasehold surrender interest value, except in special circumstances beyond the Director's control, will be the date of expiration or termination of this CONTRACT, or the date the Concessioner ceases to utilize related capital improvements under the terms of this CONTRACT. Depreciation of the related capital improvements will be established as of the date of expiration or termination of this CONTRACT, or, if applicable, the date the Concessioner ceases to utilize the capital improvements under the terms this CONTRACT.

(b) In the event that extraordinary circumstances beyond the control of the Director prevent the Director from making the leasehold surrender interest value payment as of the date of expiration or termination of this CONTRACT, or, as of the date the Concessioner ceases to utilize related capital improvements under the terms of this CONTRACT, the payment when made will include interest on the amount that was due on the date of expiration or termination of this CONTRACT or cessation of use for the period after the payment was due until payment is made (in addition to the inclusion of a continuing Consumer Price Index adjustment until the date payment is made). The rate of interest will be the applicable rate of interest established by law for overdue obligations of the United States. The payment for a leasehold surrender interest value will be made within one year after the expiration or termination of this CONTRACT or the cessation of use of related capital improvements under the terms of this CONTRACT.

Section 12. Process for Determining Leasehold Surrender Interest Value

In the event that the Concessioner and the Director cannot reach agreement as to a leasehold surrender interest value where required by the terms of this CONTRACT, the leasehold surrender interest value will be determined by arbitration upon request of the Director or the Concessioner. The arbitration procedures are described in Section 1. A prior decision as to the construction cost of capital improvements made by the Director or by an arbitration panel in accordance with this Exhibit A are final and not subject to further arbitration.

Section 13. Payment of Leasehold Surrender Interest by a New Concessioner

A new concession contract awarded to a new concessioner will require the new concessioner to pay the Concessioner its leasehold surrender interest value in existing capital improvements as determined under Section 12.

Section 14. Obtaining Additional Leasehold Surrender Interest by Undertaking a Major Rehabilitation or Adding to a Structure in Which the Concessioner has a Leasehold Surrender Interest

If the Concessioner, with the written approval of the Director, undertakes a major rehabilitation or adds a new structure (*e.g.*, a new wing to an existing building or an extension of an existing sidewalk) to an existing structure in which the Concessioner has a leasehold surrender interest, the Concessioner will increase its leasehold surrender interest in the related structure, effective as of the date of substantial completion of the major rehabilitation or new structure, by the construction cost of the major rehabilitation or new structure. The Consumer Price Index adjustment for leasehold surrender interest value purposes will apply to the construction cost as of the date of substantial completion of the major rehabilitation or new structure. Approvals for major rehabilitations and additions to structures are subject to the same requirements and conditions applicable to new construction as described in this CONTRACT.

Section 15. Obtaining Additional Leasehold Surrender Interest by Replacing a Fixture in Which the Concessioner has a Leasehold Surrender Interest

If the Concessioner replaces an existing fixture in which the Concessioner has a leasehold surrender interest with a new fixture, the Concessioner will increase its leasehold surrender interest by the amount of the construction cost of the replacement

fixture less the construction cost of the replaced fixture.

Section 16. Obtaining a Leasehold Surrender Interest in Existing Real Property Improvements in which no Leasehold Surrender Interest Exists

(a) If the main body of this CONTRACT requires the Concessioner to replace fixtures in real property improvements in which there is no leasehold surrender interest (*e.g.*, fixtures attached to an existing government facility assigned by the Director to the Concessioner), a leasehold surrender interest will be obtained by the Concessioner in such replacement fixtures subject to the approval and determination of construction cost and other conditions contained in CONTRACT.

(b) If the main body of this CONTRACT requires the Concessioner to undertake a major rehabilitation of a structure in which there is no leasehold surrender interest (*e.g.*, a government-constructed facility assigned to the Concessioner), upon substantial completion of the major rehabilitation, the Concessioner will obtain a leasehold surrender interest in the structure. The initial construction cost of this leasehold surrender interest will be the construction cost of the major rehabilitation. Depreciation for purposes of leasehold surrender interest value will apply only to the rehabilitated components of the related structure.

Section 17. No Leasehold Surrender Interest Results from Repair and Maintenance of Real Property Improvements

The Concessioner will not obtain initial or increased leasehold surrender interest as a result of repair and maintenance of real property improvements unless a repair and maintenance project is a major rehabilitation.

Exhibit B

(Sample) Operating Plan

I. Introduction

This Operating Plan between _____ (hereinafter referred to as the ''Concessioner'') and [Park Unit Name] (hereinafter referred to as the ''Service'') shall serve as a supplement to Concession Contract CC–xxxxnnnn–yy (hereinafter referred to as the ''CONTRACT''). It describes specific operating responsibilities of the Concessioner and the Service with regard to those lands and facilities within [Park Unit Name] which are assigned to the Concessioner for the purposes authorized by the CONTRACT.

In the event of any conflict between the terms of the CONTRACT and this Operating Plan, the terms of the CONTRACT, including its designations and amendments, shall prevail.

This plan will be reviewed annually by the Superintendent in consultation with the Concessioner and revised as determined necessary by the Superintendent of [Park Unit Name].

Any revisions shall not be inconsistent with the main body of this CONTRACT. Any revisions must be reasonable and in furtherance of the purposes of the CONTRACT.

[From this point on, this document is tailored to the requirements of each individual park.]

Exhibit C

Nondiscrimination

Section I: Requirements Relating to Employment and Service to the Public

A. Employment

During the performance of this CONTRACT the Concessioner agrees as follows:

(1) The Concessioner will not discriminate against any employee or applicant for employment because of race, color, religion, sex, age, national origin, or disabling condition. The Concessioner will take affirmative action to ensure that applicants are employed, and that employees are treated during employment, without regard to their race, color, religion, sex, age, national origin, or disabling condition. Such action shall include, but not be limited to, the following: Employment upgrading, demotion, or transfer; recruitment or recruitment advertising; layoff or termination; rates of pay or other forms of compensation; and selection for training, including apprenticeship. The Concessioner agrees to post in conspicuous places, available to employees and applicants for employment, notices to be provided by the Secretary setting forth the provision of this nondiscrimination clause.

(2) The Concessioner will, in all solicitations or advertisements for employees placed by on behalf of the Concessioner, state that all qualified applicants will receive consideration for employment without regard to race, color, religion, sex, age, national origin, or disabling condition.

(3) The Concessioner will send to each labor union or representative of workers with which the Concessioner has a collective bargaining agreement or other contract or understanding, a notice, to be provided by the Secretary, advising the labor union or workers' representative of the Concessioner's commitments under Section 202 of Executive Order No. 11246 of September 24, 1965, as amended by Executive Order No. 11375 of October 13, 1967, and shall post copies of the notice in conspicuous places available to employees and applicants for employment.

(4) Within 120 days of the commencement of a contract every Government contractor or subcontractor holding a contract that generates gross receipts which exceed $50,000 and having 50 or more employees shall prepare and maintain an affirmative action program at each establishment which shall set forth the contractor's policies, practices, and procedures in accordance with the affirmative action program requirement.

(5) The Concessioner will comply with all provisions of Executive Order No. 11246 of September 24, 1965, as amended by Executive Order No. 11375 of October 13, 1967, and of the rules, regulations, and relevant orders of the Secretary of Labor.

(6) The Concessioner will furnish all information and reports required by Executive Order No. 11246 of September 24, 1965, as amended by Executive Order No. 11375 of October 13, 1967, and by the rules, regulations, and orders of the Secretary of Labor, or pursuant thereto, and will permit access to the Concessioner's books, records, and accounts by the Secretary of the Interior and the Secretary of Labor for purposes of investigation to ascertain compliance with such rules, regulations, and orders.

(7) In the event of the Concessioner's noncompliance with the nondiscrimination clauses of this CONTRACT or with any of such rules, regulations, or orders, this CONTRACT may be canceled, terminated or suspended in whole or in part and the Concessioner may be declared ineligible for further Government concession contracts in accordance with procedures authorized in Executive Order No. 11246 of September 24, 1965, as amended by Executive Order No. 11375 of October 13, 1967, and such other sanctions may be imposed and remedies invoked as provided in Executive Order No. 11246 of September 24, 1965, as amended by Executive Order No. 11375 of October 13, 1967, or by rule, regulation, or order of the Secretary of Labor, or as otherwise provided by law.

(8) The Concessioner will include the provisions of paragraphs (1) through (7) in every subcontract or purchase order unless exempted by rules, regulations,

or orders of the Secretary of Labor issued pursuant to Section 204 of Executive Order No. 11246 of September 24, 1965, as amended by Executive Order No. 11375 of October 13, 1967, so that such provisions will be binding upon each subcontractor or vendor. The Concessioner will take such action with respect to any subcontract or purchase order as the Secretary may direct as a means of enforcing such provisions, including sanctions for noncompliance: Provided, however, that in the event the Concessioner becomes involved in, or is threatened with, litigation with a subcontractor or vendor as a result of such direction by the Secretary, the Concessioner may request the United States to enter into such litigation to protect the interests of the United States.

B. Construction, Repair, and Similar Contracts

The preceding provisions A(1) through A(8) governing performance of work under this CONTRACT, as set out in Section 202 of Executive Order No. 11246 of September 24, 1965, as amended by Executive Order No. 11375 of October 13, 1967, shall be applicable to this CONTRACT, and shall be included in all contracts executed by the Concessioner for the performance of construction, repair, and similar work contemplated by this CONTRACT, and for that purpose the term ''CONTRACT'' shall be deemed to refer to this instrument and to contracts awarded by the Concessioner and the term ''Concessioner'' shall be deemed to refer to the Concessioner and to contractors awarded contacts by the Concessioner.

C. Facilities

(1) *Definitions:* As used herein:

(i) Concessioner shall mean the Concessioner and its employees, agents, lessees, sublessees, and contractors, and the successors in interest of the Concessioner;

(ii) facility shall mean any and all services, facilities, privileges, accommodations, or activities available to the general public and permitted by this agreement.

(2) The Concessioner is prohibited from:

(i) publicizing facilities operated hereunder in any manner that would directly or inferentially reflect upon or question the acceptability of any person because of race, color, religion, sex, age, national origin, or disabling condition;

(ii) discriminating by segregation or other means against any person.

Section II: Accessibility

Title V, Section 504, of the Rehabilitation Act of 1973, as amended in 1978, requires that action be taken to assure that any ''program'' or ''service'' being provided to the general public be provided to the highest extent reasonably possible to individuals who are mobility impaired, hearing impaired, and visually impaired. It does not require architectural access to every building or facility, but only that the service or program can be provided somewhere in an accessible location. It also allows for a wide range of methods and techniques for achieving the intent of the law, and calls for consultation with disabled persons in determining what is reasonable and feasible.

No handicapped person shall, because a Concessioner's facilities are inaccessible to or unusable by handicapped persons, be denied the benefits of, be excluded from participation in, or otherwise be subjected to discrimination under any program or activity receiving Federal financial assistance or conducted by any Executive agency or by the U.S. Postal Service.

A. Discrimination Prohibited

A Concessioner, in providing any aid, benefit, or service, may not directly or through contractual, licensing, or other arrangements, on the basis of handicap:

(1) Deny a qualified handicapped person the opportunity to participate in or benefit from the aid, benefit, or service;

(2) Afford a qualified handicapped person an opportunity to participate in or benefit from the aid, benefit, or service that is not equal to that afforded others;

(3) Provide a qualified handicapped person with an aid, benefit, or service that is not as effective as that provided to others;

(4) Provide different or separate aids, benefits, or services to handicapped persons or to any class of handicapped persons unless such action is necessary to provide qualified handicapped persons with aid, benefits, or services that are as effective as those provided to others;

(5) Aid or perpetuate discrimination against a qualified handicapped person by providing significant assistance to an agency, organization, or person that discriminates on the basis of handicap in providing any aid, benefit, or service to beneficiaries of the recipient's program;

(6) Deny a qualified handicapped person the opportunity to participate as a member of planning or advisory boards; or

(7) Otherwise limit a qualified handicapped person in the enjoyment of any right, privilege, advantage, or opportunity enjoyed by others receiving an aid, benefit, or service.

B. Existing Facilities

A Concessioner shall operate each program or activity so that the program or activity, when viewed in its entirety, is readily accessible to and usable by handicapped persons. This paragraph does not require a Concessioner to make each of its existing facilities or every part of a facility accessible to and usable by handicapped persons.

Exhibit D

Assigned Land and Real Property Improvements (Concession Facilities)

Land Assigned

Land is assigned in accordance with the boundaries shown on the following map[s]:

Real Property Improvements Assigned

The following real property improvements are assigned to the concessioner for use in conducting its operations under this CONTRACT:
Building Number
Description
Approved, effective _____, 20____
By: _____
Regional Director, _____ Region

Exhibit E

Assigned Government Personal Property

Government personal property is assigned to the Concessioner for the purposes of this CONTRACT as follows:
Property Number
Description of Item
Effective, this ____day of _____, 20 ____.
By:_____
Regional Director,____Region

Exhibit F

Concessioner Construction, Major Rehabilitation, and Repair and Maintenance Project Procedures

A. Introduction

This exhibit presents step-by-step procedures for the administration of Concessioner building projects (construction, major rehabilitation, and repair and maintenance projects) within the park Area. Important terms are defined first. Project planning and design are presented second, followed by guidelines for project supervision. All projects undertaken by the Concessioner require a coordinated effort between the Concessioner and the Superintendent. This exhibit applies to

the building of new structures or facilities, major rehabilitations, and the repair and maintenance (''R&M projects'') of existing Concession Facilities that change the nature, appearance or value of existing Concession Facilities. Rehabilitation projects that are not major rehabilitations as defined in the Contract are considered as R&M projects. Facility operations, custodial and preventive maintenance and maintenance needed for facility operations are not considered R&M projects subject to these procedures. Repair and maintenance is also not to be considered as a project subject to these procedures when the activity does not change the nature, appearance or value of existing Concession Facilities. All projects must be proposed, approved, and accomplished under these procedures. In the event of any inconsistency between this exhibit and the main body of this CONTRACT and Exhibit A, the main body of the CONTRACT and Exhibit A will prevail.

In accordance with the Contract, only certain new construction and major rehabilitation projects may qualify for leasehold surrender interest (LSI). Following these administrative procedures for both LSI and non-LSI projects will enable NPS to approve LSI, as well as to ensure that all requirements of law and NPS policy are undertaken with respect to any project.

In addition, these procedures will enable the appraisal of LSI to occur in an orderly way. The documentation collected and organized by the use of these guidelines will provide a record of decision or ''paper trail'' of project development and implementation that will assist the park and concessioner in future planning and facility appraisal.

All project activities shall be directed and managed as presented in the ''Annual Construction and Repair and Maintenance Management Plan'' (CMP). In addition to these activities, the CMP is also to present scheduled project development and implementation, as presented below under Item C, Project Planning and Design, paragraph 1. Individual projects included in the CMP will be authorized by NPS through an approved Project Statement (PS).

Projects may be required to be reviewed under the National Environmental Policy Act (NEPA) of 1969, as amended. Projects within historic and culturally significant areas may require certain building management methods established under the National Historic Preservation Act of 1966, as amended. All construction shall comply with codes and building requirements adopted by NPS, including without limitation and where applicable, the most recent International Building Code (IBC), National Fire Protection Association (NFPA) codes, the Americans with Disabilities Act (ADA) requirements, and NPS management policies.

The Concessioner is responsible for all aspects of project development and implementation. The role of the NPS is to provide direction, authorization and oversight. The Concessioner and the Park staff must work closely together to successfully complete construction projects in a manner that achieves the goals and objectives of the park Area and the NPS.

B. Definition of Terms

''Annual Construction and Repair and Maintenance Management Plan'' (CMP): A written document presenting all construction, major rehabilitation and R&M projects to be undertaken by the Concessioner during the following calendar year after the final submittal date.

''Approved Project Documents'': Project drawings and specifications approved by the Park Superintendent and used by the Concessioner to direct a contractor in the type, size and quality of projects.

''Change Order'': A written agreement between the ''Construction Supervisor'' and the Contractor or Consultant that changes the contract documents or scope of project work as agreed upon contractually.

''Construction'': The removal or assembly of a building, road, utility or any other facility part or material that changes the nature, appearance, or value of that facility.

''Construction Supervisor'': A Concessioner employee designated to administer and coordinate day-to-day projects representing the interests of the Concessioner and NPS and assuring quality work is performed that meets the design and specifications of the project. This person must have the authority to direct the contractor in any way that may change the contractual agreement between the Concessioner and the contractor.

''Conventional Design-Bid-Build Methods'': Construction developed and implemented under several separate agreements managed and coordinated directly by the Concessioner.

''Contact Person'': A Concessioner employee designated as the person to contact with regard to a specific matter, concern, or issue.

''Facilitator'': A Concessioner employee designated to have the role of providing structure and agendas for meetings with NPS and who records meeting discussions and outcomes.

''Guaranteed Maximum Price Design-Build Construction Methods'': An industry recognized type of construction where project consultants and contractors form an agreement to work as one entity providing facility construction in response to a developed request for proposal issued by the Concessioner. (Reference: Design Build Institute of America).

''Licensed Contractor'': An entity performing construction certified or licensed by the State to perform construction services within that State.

''Major Rehabilitation'': (Defined in the CONTRACT).

''Project Coordinator'': A Concession employee vested with the authority to direct consultants and contractors in the expenditure of construction and R&M funds.

''Project Statement'' (PS): An agreement between NPS and the Concessioner approved by the Park Superintendent that authorizes the development and implementation of individual projects identified in a CMP.

''Registered Technical Professionals'': Architects, engineers, or any subject area expert either certified or licensed by the State to perform specialized services or certified by a widely recognized industry regulator held responsible for quality and standard application of technical subject matter.

''Substantially Complete'': (Defined in the CONTRACT).

''Total Project Cost'': The total of all actual project expenditures (invoiced and paid) for completion of a project.

''Total Project Price'': The total of all estimated project expenditures for completion of a project.

C. Project Planning and Design

(1) Submit an Annual Construction and Repair and Maintenance Plan (CMP)

Before approval to proceed with any project is granted by NPS, the Concessioner must submit a CMP for implementation the following year. Some projects may require several years of planning and design before construction. The purpose of the plan is to identify the need and tentative scope of projects a complete year in advance of actual work to allow adequate time to prepare for project commencement. The CMP should include any intended projects. Projects shown in the plan must include at least a project title; project concept description; a brief statement of justification; and anticipated NEPA and Section 106 planning and compliance established in collaboration with NPS staff.

(2) Notify NPS of Intent-to-Proceed

The Concessioner shall formally notify the Park Superintendent in writing of intent to proceed with any facility planning, design and/or projects. The project must be identified in the CMP the calendar year before to assist the NPS in sequencing and scheduling necessary support staff. The time of notification shall be sufficiently in advance of any Concessioner budget formulation to assure the requirements of the Park Superintendent are included in the project scope *before* the project is funded.

(3) Identify a Project Coordinator

The Concessioner project coordinator must be identified for each project. This person should have the authority to obligate project expenditures and hire and direct consultants and contractors, and concessioner support staff.

(4) Prepare a Proposed Project Statement (PS)

Arrange and facilitate a project planning conference with NPS staff and prepare a proposed PS to be submitted to the Park Superintendent for review. The conference should be performed on the proposed project site, if needed.

(a) *Conference goal and product.* The primary goal of the conference is to clearly identify the project concepts and scope at sufficient detail to carry the project through to completion without significant deviation from an approved PS. The product of the conference should be an approved PS prepared by the Concessioner resulting from collaboration between the Concessioner and the Park Superintendent.

(b) *Project Statement Content.* The PS shall include the following as a minimum: Project description; justification; scope of work, including NEPA and Section 106 planning and compliance; estimated Total Project Price; proposed schedule; milestones of NPS design review and third party project inspection and certification. The elements of the PS will function as check points of accountability and will vary in frequency and scope, contingent upon the nature, complexity and scope of the proposed project.

(c) *Leasehold Surrender Interest.* If the Concessioner seeks leasehold surrender interest as a result of a construction project, the Concessioner must request and receive the written approval of the proposed construction project by the Park Superintendent in accordance with the terms of this leasehold surrender interest concession contract. An estimate of the amount of leasehold surrender interest shall be identified in advance if the Concessioner requests leasehold surrender interest. The estimated leasehold surrender interest costs shall be separately identified as part of the Total Project Price and substantiated, if requested, with written and competitively acquired price proposals or construction contracts. Not all projects qualify for LSI. LSI is only granted under the terms of this CONTRACT, including, without limitation, its Exhibit A.

(d) *Methods of Establishing the Expected Value of Leasehold Surrender Interest.* A number of methods are available to estimate the Concessioner's leasehold surrender interest as long as eligible direct and indirect costs are specified. The methods of identifying the expected value of leasehold surrender interest include guaranteed maximum price design-build construction methods, conventional design-bid-build methods, and construction price estimates professionally prepared by subject area experts.

(e) *Professional Services and Construction.* The Concessioner must assure the park in its project statement that for any project requiring professional services, such services shall be acquired from appropriate registered technical professionals. Licensed contractors shall perform all project work unless otherwise approved in writing by the Superintendent. The Concessioner shall provide for registered technical professionals to perform project inspection and/or facility certification, or any other service needed for project implementation at the request of the Park Superintendent.

(f) *NPS Operations.* Any aspect of the proposed project where the scope of work interfaces with NPS operations such as utility service connections or road maintenance operations must be clearly identified in the PS.

(5) Submit Project Statement for NPS Review

The proposed PS shall be submitted in written correspondence from the Concessioner to the Park Superintendent requesting review. A PS signed by the Park Superintendent constitutes official authority for the Concessioner to continue further project development to the level specified in written correspondence from the Superintendent. The Concessioner may obtain authority to complete a project when sufficient planning and design has been completed to meet the interests of the park. Projects that do not have the level of required planning are likely to receive only conceptual approval with authorization to proceed with further planning and/or design as required to assure park objectives are met.

(a) *Project Statements Containing Claims for Leasehold Surrender Interest.* A PS must present an estimate of project expenditures to be claimed for LSI purposes. The eligibility of any expenditures for LSI will not be identified until all project planning is complete to the satisfaction of the Park Superintendent, including NEPA and Section 106 compliance, if required. An approved PS serves only as a guide for further project development to the level specified in the PS. The Park Superintendent shall only approve final LSI costs after project completion and written project close-out.

(b) *Design Required for Leasehold Surrender Interest Eligibility and Value.* The Park Superintendent may require an appropriate level of design to determine whether a project is eligible for LSI, and if so, its estimated cost. The level of project planning and design required may include completion of concept design, schematic design, or preliminary engineering design, to clearly identify the elements eligible for LSI. Some projects may require the completion of construction drawings and specifications before the proposed LSI is documented to the satisfaction of the Park Superintendent. All improvements for which LSI is claimed must be defined in record ''as-built'' construction drawings and specifications when the Concessioner submits its request for LSI at Project Close-out.

(6) Establish a Project File

A file of all project documents shall be held by the Concessioner as a chronological audit trail of all project decision-making activity for each project from concept development to completion and NPS acceptance. Each project shall be identified with a unique project number assigned by the Park. All documents entered into the file should have the project identification number clearly displayed on it as part of document identity.

(a) *Leasehold Surrender Interest Project File.* The Project File will become an LSI project file when the Concessioner requests approval of LSI. It shall be established and maintained by the Concessioner and shall include all of the documents identified in section 6(C) of this Exhibit. This file shall be submitted at the time of Project Close-out to the Park Superintendent as the basis for the leasehold surrender interest request. As part of this file, the Concessioner must maintain auditable records of all expenditures attributable to each project and have them available

for review if requested by NPS personnel. Invoices shall contain sufficient information to identify the tasks completed or products delivered as agreed upon in contracts presenting a full scope of work. The file shall clearly provide a ''paper trail'' between expenditures eligible for LSI purposes and the payment of those expenses.

(b) *Typical Project File.* The organization of a typical project file is presented in the following sections:

Section A. Project Statement. The approved PS, scope of work, and a copy of the notice-to-proceed letter, authorizing planning and design, sent to the Concessioner by the Park Superintendent should be filed in this section.

Section B. Planning. This section should contain documents pertaining to any project planning. Typical documents include those produced for NEPA and Section 106 compliance. Also contained in this section should be any concept design, preliminary design, or schematic design correspondence and documents. When the Park Superintendent grants approval for any of the above stages of project development, correspondence from the Park Superintendent should be filed in this section.

Section C. Assessment. This section should contain a record of any assessment performed during project implementation. Soil, vegetation, floodplain, structural, electrical assessments, for example, should be filed in this section. Any other existing site or facility investigative reports, and all quality assurance documents such as third party project inspection, testing and certification should also be filed in this section.

Section D. Design. This section should contain a record of documents produced and decisions made during the design phase of a project. The design phase typically occurs when project activity has shifted from conceptual discussion to organizing detailed direction provided to a contractor for construction. Correspondence from the Park Superintendent providing design approval should be in this section.

Section E. Project Work. This section should contain a record of decisions made during project work. The letter from the Park Superintendent granting notice-to-proceed with the project should be in this section. All contractor proposals, change-orders, design modification documents, daily construction activity records, weekly meeting minutes, etc. should be in this section. Documentation for larger projects should be organized according to subcontractor activity or standard specification enumeration. The final document filed in this section should be the NPS correspondence sent to the Concessioner providing project acceptance and close-out.

Section F. Financial. This is a very important section where a copy of all contracts and contract modifications should be filed. It is important to assure that all expenditures are accounted for. All expenditures must have sufficient supporting documentation cross-referenced with documents in other file sections, if necessary. Monthly financial detail reports shall be prepared and filed in this section with copies of all project budget documents. This section must contain all correspondence supporting LSI with appropriate cross reference to other sections for clarity of the LSI ''paper trail.'' (For example, cross reference tabs). Also contained in this section shall be a copy of the project acceptance and close-out letter from the Park Superintendent that specifies the amount of leasehold surrender interest, if any, applicable to the project.

Section G. Photo Documentation. Complete documentation, including before-and-after photos, records of any special situations or conditions requiring changes, documentation of methods used, etc., should be kept to support requests for LSI and to assist future maintenance and/or appraisal efforts. Photographic documentation is also usually required for modifications to ''listed'' historic structures. To be most useful, photos should be filed with the documents they support.

(7) Submit Resource Compliance Documents for Review and Approval

During development of the project statement, responsibility for compliance work will be established. The Concessioner must request the participation of NPS staff early in project planning to assure uninterrupted project implementation. Development of compliance documentation must occur as soon as possible. Every effort shall be made to perform compliance document preparation tasks concurrently with project planning and design.

(a) *Historic/cultural compliance.* Historic and cultural compliance document approval is required for property listed in or eligible for inclusion in the National Register of Historic Places. Any undertaking affecting property listed shall be performed in accordance with The Secretary of the Interior's Standards for Rehabilitation & Illustrated Guidelines for Rehabilitating Historic Buildings. The Concessioner must document proposed actions using the ''XXX Form'' (available from the National Park Service) before any work occurs for any project that may affect a historic structure, historic district, cultural landscape, archeological site or historic object or furnishing. Compliance will usually require the preparation of at least ''assessment of effect'' drawings and specifications to the level of final documents if required. Compliance shall carry through to submission of the ''Construction or R&M Completion Report'' for many projects where significant changes are made to the historic structure and/or landscape. Therefore, compliance document approval usually will not occur until after submission of project documents. In-park historic compliance review and approval will require at least several weeks from date of submittal. Where submittal is made to the State Historic Preservation Officer or the Advisory Council on Historic Preservation, additional time will be required before approval may be given. This may be performed concurrently with approval of project documents.

(b) *Ground disturbance.* Where ground disturbance will take place submittal of drawings that show area and depth of proposed ground disturbance will be required. Submittal of this document early in project planning is recommended. All project documents that include soil disturbance shall have the following specification included within them:

''Petroglyphs, artifacts, burial grounds or remains, structural features, ceremonial, domestic, and archeological objects of any nature, historic or prehistoric, found within the project area are the property of and will be removed only by the Government. Should Contractor's operations uncover or his/her employees find any archeological remains, Contractor shall suspend operations at the site of discovery; notify the Government immediately of the findings; and continue operations in other areas. Included with the notification shall be a brief statement of the location and details of the findings. Should the temporary suspension of work at the site result in delays, or the discovery site require archeological studies resulting in delays of additional work for Contractor, he/she will be compensated by an equitable adjustment under the General Provisions of the contract.''

(c) *Archeological Monitoring.* Monitoring project activity is a requirement of cultural compliance when significant ground disturbance occurs during project work. Any cultural resource monitoring required shall be performed under the direction

of the NPS. The NPS shall be notified sufficiently in advance of the need for a monitor and will assist the Concessioner in making arrangements for the services of an archeological monitor at the expense of the Concessioner, if the NPS is unable to provide the expertise.

(d) *National Environmental Policy Act (NEPA) compliance.* NEPA compliance document approval is required before any construction or R&M project occurs for any project that has an impact on the environment. Projects requiring compliance will be identified by the NPS early during project planning. The actual review period length may vary widely depending on the nature, scope, and complexity of the project elements that relate to resource compliance. Projects that have an insignificant effect on park resources usually require a ''categorical exclusion'' determination—a process that may require sufficient extended lead-time from submittal of review documents. Projects having a significant effect on park resources or that are not part of other NEPA compliance documentation may also require a longer period of implementation.

(8) Submit Project Documents (PDs) for Review and Approval

The Concessioner shall submit PDs for review and approval to establish project activity for approval by the Superintendent. Approved PDs establish the full scope of the project and the quality of work to be performed by the Concessioner. The scope of the documents required will be identified in the PS. The scope and detail of the documents will vary depending on the nature and complexity of the project. ''Manufacturer's cut-sheets'' may be all that is required for some R&M projects, and for others, complete detailed drawings and specifications may be required. The Concessioner is responsible for the technical accuracy and completeness of PDs and shall provide the technical review as needed to assure compliance with all applicable federal, state and local statutes, codes, regulations and appropriate industry standards. Any exception to this will be by written authorization from the Superintendent.

(9) Submit a Project Estimate and Schedule

An estimate of the Total Project Price and completion schedule shall be submitted to the Superintendent before work begins. This is a revision of the Total Project Price and completion schedule estimated in the Project Statement. It is based on the best information available identified during project planning and design.

D. Project Management Procedures

(1) Identify a Project Supervisor

A Project Supervisor shall be identified and vested with the authority to direct the contractor on behalf of the Concessioner. The NPS will direct its communication concerning the nature and progress of day-to-day project activity to this person. This person should have full responsibility for assuring that all construction complies with the approved Project Documents and specified code compliance. The NPS should not take any responsibility for projects until Project Close-out and Acceptance when the NPS receives certification of completed work performed in compliance with Project Documents and all specified codes.

(2) Submit a Total Project Price for Review

(a) All projects completed under the terms of this Contract where LSI is requested shall include submittal of a Total Project Price in writing to the Superintendent for review.

(b) Where no LSI is requested, the Total Project Price is provided as an informational item. Formal approval by the Superintendent is not required.

(3) Notice-to-Proceed with a Project

A ''Notice-to-Proceed'' with a project will be issued when all submittals requested by the Park Superintendent have been reviewed and approved. The Notice-to-Proceed must be received by the Concessioner in writing before any project work occurs.

(4) Hold a Pre-Project Conference with the Contractor

The Concessioner shall arrange and facilitate a pre-project conference as needed or as requested by the NPS with the Contractor. The purpose of the conference is to provide the NPS the opportunity to meet the Contractor and confirm that the Contractor has full understanding and knowledge of all work to be performed. In addition, the conference provides the opportunity to confirm established communication linkages between the Concessioner, the Contractor and the NPS. Any questions the Contractor may have regarding any matter of the project or anything about Area access, rules and regulations may also be discussed.

(5) Submit Project Activity Reports (As Required)

A record of project activity shall be provided by the Concessioner on all approved projects. The scope and frequency of performing this documentation shall be identified upon submittal of PDs for Park approval. The Concessioner is responsible for the accuracy and completeness of all design and completed projects.

(a) *Content.* Project activity reports shall summarize daily project activity recording important observations and decisions. It shall also identify project expenditures to date if required for leasehold surrender interest purposes. The reports shall identify any changes to the approved PDs either by change order or any other variance from approved PDs. The NPS shall be notified immediately, if a change is likely to occur in the Total Project Price where the project involves LSI. (See discussion below for review and approval of change orders and contract modifications.)

(b) *Regulatory code compliance and project inspection (as required).* Inspection reports specifically addressing regulatory code compliance and adherence to PDs will be required, at the request of the Superintendent, during certain stages of the work. Independent industry certified inspectors or registered professional subject area experts shall perform all inspections and project component certification. Inspection reports shall be prepared that include all findings and results of code compliance inspection. Section and paragraph of applicable codes shall be referenced when deficiencies are noted. Recommendations presenting remediation shall accompany line item deficiencies in the report. All inspection reports shall be included in the final project completion report submitted before project acceptance by the Superintendent.

(6) Submit Requests for Changes in Approved Project Documents

The Superintendent's approval will be required before any significant changes are made to the project scope during the completion of projects, as identified in the approved PDs. The Concessioner shall provide the NPS with written notification immediately upon identifying the need for a change in project scope that effects any of the items listed below. The written notification shall include a request for change in the approved PDs complete with justification and explanation of effect of change on all other aspects of project design and work. Requests for any significant changes in the approved PDs shall be reported in project activity reports with attachment of any documentation requested. Changes in approved project scope during the work

that will require review and approval of the Superintendent include the following:

(a) Changes affecting natural, cultural and/or historic resources;

(b) Changes in designated visual appearance;

(c) Changes in the interface with NPS utility and/or road facility maintenance operations;

(d) Changes in project scope and/or the estimated leasehold surrender interest, as required for facility improvement projects.

(e) Proposed changes where natural or cultural/historic resources are involved may require a significant period of review depending on the complexity of the concern.

(7) Submittal of Change Orders for Review and Approval (For Leasehold Surrender Interest Only)

When one of the five factors listed above exists, the Concessioner shall submit, for the review and approval of the Park Superintendent, documentation justifying the proposed changes. The Concessioner shall also submit a revised Total Project Price for each proposed change, as needed, indicating the proposed change in estimated LSI. All change orders or any other means of directing the Contractor that may have the effect of increasing the Total Project Price will require the Park Superintendent's review and approval, if the project has LSI implications.

(8) NPS Project Inspection

The project will be inspected periodically by a representative of the Park Superintendent. The purpose of these inspections is not in lieu of or in any way a substitute for project inspection provided by the Concessioner. The responsibility to assure safe, accountable project activity and for providing the contractor with direction to fulfill the full scope of approved work is the responsibility of the Concessioner.

(9) Project Supervision Documents

Project drawings and specifications must be kept on the project site complete with any design or project modifications, in a well-organized form. The Construction Supervisor shall keep a current ''red-line'' copy of approved PDs updated daily showing any changes. In addition, a well-organized file of submittals required in the approved PDs and approved where required by professional Architects and/or Engineers must also be kept on the project site with the PDs for periodic inspection by NPS staff.

(10) Substantial Completion Inspection and Occupancy

Joint inspection by the NPS and the concessioner will occur upon notification that the project is substantially complete. A ''punch list'' of work items will be formulated and performed to ''close-out'' the project. The Superintendent, in writing will accept the project, when the ''punch-list'' items are completed.

The Concessioner is not to occupy the facility until authorized in writing by the Park Superintendent.

(11) Requesting Approval of Leasehold Surrender Interest

Upon substantial completion of a project, as determined by the Park Superintendent, the Concessioner must provide the Superintendent a written schedule of requested LSI eligible costs incurred, which becomes the Concessioner's request for LSI approval. The project file, containing actual invoices and the administrative record of project implementation, must support these expenditures and shall be submitted to the Park Superintendent for review with the request. If requested by the Park Superintendent, the Concessioner shall also provide written certification from a certified public accountant regarding the LSI costs. The certification must comply with the requirements of Exhibit A of this Contract.

(12) Project Completion Report

Upon completion of any project, the Concessioner shall submit a Project Completion Report to the NPS. The completion report shall include the Total Project Cost; before-and-after photo documentation; warranties; operation and maintenance manuals, if required; all inspection and certification reports; and ''as-constructed'' drawings (see item section C(13) below). Projects where LSI is requested may require the submittal of any other similar documents deemed by the NPS necessary to establish complete project documentation. The level of documentation requested may also include adequate photo-documentation provided during construction to record significant unforeseen site and construction conditions resulting in changes to approved PDs and the approved Total Construction Price.

(13) ''As-Constructed Drawings''

The ''as constructed'' drawings included with the Project Completion Report for all projects shall be full-size archival quality prepared in accordance with NPS management policies and must be submitted before project acceptance by the National Park Service. At least two half-size sets of drawings shall also be provided. The drawings establishing LSI shall provide a full and complete record of all ''as-constructed'' facilities including reproduction of approved submittals and manufacturer's literature documenting quality of materials, equipment and fixtures in addition to a record set of project specifications approved for construction.

(14) Request Project Acceptance and Close-out by the Superintendent

The Concessioner shall request project acceptance by the Park Superintendent either at the time of submittal of the Project Completion Report or at any time thereafter. Project acceptance will be contingent upon fulfillment of all requested project completion work tasks and submittal of all project documentation in accordance with these guidelines and as requested by the NPS. Until receiving formal written project acceptance and close-out from the Park Superintendent, the Concessioner retains full responsibility for all project construction activity and liability for both completed and uncompleted work. For LSI projects, the project close-out letter issued by the Superintendent will specify the granted amount of LSI value resulting from the project.

Exhibit G

Leasehold Surrender Interest as of the Effective Date of this Contract

Pursuant to Section 9(c)(2), the Concessioner's leasehold surrender interest in real property improvements as of the effective date of this CONTRACT, if any, is as follows:

Building Number

Description

Value

[If there are none, this exhibit should say ''NONE''.]

Exhibit G Approved Effective _____

Concessioner

United States of America

By: _____

Director, National Park Service

By: _____

Title: _____

Exhibit H

(Sample) Maintenance Plan

I. Introduction

This Maintenance Plan between ____ (hereinafter referred to as the ''Concessioner'') and [Park Unit Name], National Park Service (hereinafter referred to as the ''Service'') shall serve

as a supplement to Concession Contract CC–xxxxnnnn–yy (hereinafter referred to as the ''CONTRACT''). It sets forth the maintenance responsibilities of the Concessioner and the Service with regard to those lands and facilities within [Park Unit Name] which are assigned to the Concessioner for the purposes authorized by the CONTRACT.

In the event of any apparent conflict between the terms of the CONTRACT and this Maintenance Plan, the terms of the CONTRACT, including its designations and amendments, shall prevail.

This plan shall remain in effect until superseded or amended. It will be reviewed annually by the Superintendent in consultation with the Concessioner and revised as determined necessary by the Superintendent of [Park Unit Name]. Revisions may not be inconsistent with the terms and conditions of the main body of this CONTRACT. Revisions must be reasonable and in furtherance of the purposes of this CONTRACT.

[From this point on, this document is tailored to the requirements of each individual park.]

Exhibit I

Insurance Requirements

I. Insurance Requirements

The Concessioner shall obtain and maintain during the entire term of this CONTRACT, at its sole cost and expense, the types and amounts of insurance coverage necessary to fulfill the obligations of the CONTRACT:

II. Liability Insurance

The following Liability Coverages are to be maintained at a minimum, all of which are to be written on an occurrence basis only. The Concessioner may attain the limits specified below by means of supplementing the respective coverage(s) with Excess or Excess ''Umbrella'' Liability.

A. Commercial General Liability

1. Coverage will be provided for bodily injury, property damage, personal or advertising injury liability (and must include Contractual Liability and Products/Completed Operations Liability).

Bodily Injury and Property Damage Limit
Products/Completed Operations Limit
Personal Injury & Advertising Injury Limit
General Aggregate
Fire Damage Legal Liability ''per fire''

2. The liability coverages may not contain the following exclusions/limitations:

a. Athletic or Sports Participants
b. Products/Completed Operations
c. Personal Injury or Advertising Injury exclusion or limitation
d. Contractual Liability limitation
e. Explosion, Collapse and Underground Property Damage exclusion
f. Total Pollution exclusion
g. Watercraft limitations affecting the use of watercraft in the course of the concessioner's operations (unless separate Watercraft coverage is maintained)

3. For all lodging facilities and other indoor facilities where there may be a large concentration of people, the pollution exclusion may be amended so that it does not apply to the smoke, fumes, vapor or soot from equipment used to heat the building.

4. If the policy insures more than one location, the General Aggregate limit must be amended to apply separately to each location, or, at least, separately to the appropriate NPS location(s).

B. Automobile Liability

Coverage will be provided for bodily injury or property damage arising out of the ownership, maintenance or use of ''any auto,'' Symbol 1. (Where there are no owned autos, coverage applicable to ''hired'' and ''non-owned'' autos, ''Symbols 8 & 9,'' shall be maintained.)

Each Accident Limit

C. Liquor Liability (if applicable)

Coverage will be provided for bodily injury or property damage including damages for care, loss of services, or loss of support arising out of the selling, serving or furnishing of any alcoholic beverage.

Each Common Cause Limit
Aggregate Limit

D. Watercraft Liability (or Protection & Indemnity) (if applicable)

Coverage will be provided for bodily injury or property damage arising out of the use of any watercraft.

Each Occurrence Limit

E. Aircraft Liability (if applicable)

Coverage will be provided for bodily injury or property damage arising out of the use of any aircraft.

Each Person Limit
Property Damage Limit
Each Accident Limit

F. Garage Liability (if applicable)

This coverage is not required, but may be used in place of Commercial General Liability and Auto Liability coverages for some operations. Coverage will be provided for bodily injury, property damage, personal or advertising injury liability arising out of garage operations (including products/completed operations and contractual liability) as well as bodily injury and property damage arising out of the use of automobiles.

Each Accident Limits—Garage Operations
Auto Only
Other Than Auto Only
Personal Injury & Advertising Injury Limit
Fire Damage Legal Liability ''per fire''
Aggregate Limit—Garage Operations
Other Than Auto Only

If owned vehicles are involved, Liability coverage should be applicable to ''any auto'' (''Symbol 21'') otherwise, coverage applicable to ''hired'' and ''non-owned'' autos (''Symbols 28 & 29'') should be maintained.

G. Excess Liability or Excess ''Umbrella'' Liability

This coverage is not required, but may be used to supplement any of the above Liability coverage policies in order to arrive at the required minimum limit of liability. If maintained, coverage will be provided for bodily injury, property damage, personal or advertising injury liability in excess of scheduled underlying insurance. In addition, coverage shall be at least as broad as that provided by underlying insurance policies and the limits of underlying insurance shall be sufficient to prevent any gap between such minimum limits and the attachment point of the coverage afforded under the Excess Liability or Excess ''Umbrella'' Liability policy.

H. Care, Custody and Control—Legal Liability (Describe Specific Coverage)

Coverage will be provided for damage to property in the care, custody or control of the concessioner.

Any One Loss

I. Environmental Impairment Liability

Coverage will be provided for bodily injury, personal injury or property damage arising out of pollutants or contaminants (on site and/or offsite).

Each Occurrence or Each Claim Limit
Aggregate Limit

J. Special Provisions for Use of Aggregate Policies

At such time as the aggregate limit of any required policy is (or if it appears that it will be) reduced or exhausted, the concessioner may be required to reinstate such limit or purchase additional coverage limits.

K. Self-Insured Retentions

Self-insured retentions on any of the above described Liability insurance policies (other than Excess ''Umbrella'' Liability, if maintained) may not exceed $5,000.

L. Workers Compensation & Employers' Liability

Coverage will comply with the statutory requirements of the state(s) in which the concessioner operates.

III. Property Insurance

A. Building(s) and/or Contents Coverage

1. Insurance shall cover buildings, structures, improvements & betterments and/or contents for all Concession Facilities, as more specifically described in Exhibit D of this CONTRACT.

2. Coverage shall apply on an ''All Risks'' or ''Special Coverage'' basis.

3. The policy shall provide for loss recovery on a Replacement Cost basis.

4. The amount of insurance should represent no less than 90% of the Replacement Cost value of the insured property.

5. The coinsurance provision, if any, shall be waived or suspended by an Agreed Amount or Agreed Value clause.

6. Coverage is to be provided on a blanket basis.

7. The Vacancy restriction, if any, must be eliminated for property that will be vacant beyond any vacancy time period specified in the policy.

8. Flood Coverage shall be maintained with a limit of not less than $.

9. Earthquake Coverage shall be maintained with a limit of not less than $.

10. Ordinance or Law Coverage shall be maintained with a limit of not less than $.

B. Boiler & Machinery Coverage

1. Insurance shall apply to all pressure objects within Concession Facilities.

2. The policy shall provide for loss recovery on a Replacement Cost basis.

3. The amount of insurance should represent no less than 75% of the Replacement Cost value of the insured property.

4. The coinsurance provision, if any, shall be waived or suspended by an Agreed Amount or Agreed Value clause.

5. Coverage is to be provided on a blanket basis.

6. If insurance is written with a different insurer than the Building(s) and Contents insurance, both the Property and Boiler insurance policies must be endorsed with a joint loss agreement.

7. Ordinance or Law Coverage shall be maintained with a limit of not less than $.

C. Builders Risk Coverage

1. Insurance shall cover new buildings or structures under construction at the Concession Facilities, and include coverage for property that has or will become a part of the project while such property is at the project site, at temporary off-site storage and while in transit. Coverage should also apply to temporary structures such as scaffolding and construction forms.

2. Coverage shall apply on an ''All Risks'' or ''Special Coverage'' basis.

3. The policy shall provide for loss recovery on a Replacement Cost basis.

4. The amount of insurance should represent no less than 90% of the Replacement Cost value of the insured property.

5. The coinsurance provision, if any, shall be waived or suspended by an Agreed Amount or Agreed Value clause.

6. Any occupancy restriction must be eliminated.

7. Any collapse exclusion must be eliminated.

8. Any exclusion for loss caused by faulty workmanship must be eliminated.

9. Flood Coverage shall be maintained with a limit of not less than $.

10. Earthquake Coverage shall be maintained with a limit of not less than $.

D. Business Interruption and/or Expense

1. Business Interruption insurance, if maintained by the Concessioner, should cover the loss of income and continuation of fixed expenses in the event of damage to or loss of Concession Facilities. Extra Expense insurance shall cover the extra expenses above normal operating expenses to continue operations in the event of damage or loss to covered property.

E. Deductibles

Property Insurance coverages described above may be subject to deductibles as follows:

1. Direct Damage deductibles shall not exceed the lesser of 10% of the amount of insurance or $25,000 (except Flood & Earthquake coverage may be subject to deductibles not exceeding $50,000).

2. Extra Expense deductibles (when coverage is not combined with Business Interruption) shall not exceed $25,000.

F. Required Clauses

1. Loss Payable Clause:

A loss payable clause similar to the following must be added to Buildings and/or Contents, Boiler and Machinery, and Builders Risk policies:

''In accordance with Concession Contract No. ___ dated ___, between the United States of America and [*the Concessioner*] payment of insurance proceeds resulting from damage or loss of structures insured under this policy is to be disbursed directly to the Concessioner without requiring endorsement by the United States of America.''

IV. Construction Project Insurance

Concessioners entering into contracts with outside contractors for various construction projects, including major renovation projects, rehabilitation projects, additions or new buildings/facilities will be responsible to ensure that all contractors retained for such work maintain an insurance program that adequately covers the construction project.

The insurance maintained by the construction and construction-related contractors shall comply with the insurance requirements stated herein (for Commercial General Liability, Automobile Liability, Workers' Compensation and, if professional services are involved, Professional Liability). Where appropriate, the interests of the Concessioner and the United States shall be covered in the same fashion as required in the Commercial Operator Insurance Requirements. The amounts/limits of the required coverages shall be determined in consultation with the Director taking into consideration the scope and size of the project.

V. Insurance Company Minimum Standards

All insurance companies providing the above described insurance coverages must meet the minimum standards set forth below:

1. All insurers for all coverages must be rated no lower than A- by the most recent edition of Best's Key Rating Guide (Property-Casualty edition).

2. All insurers for all coverages must have a Best's Financial Size Category of at least VIII according to the most recent edition of Best's Key Rating Guide (Property-Casualty edition).

3. All insurers must be admitted (licensed) in the state in which the concessioner is domiciled.

VI. Certificates of Insurance

All certificates of Insurance required by this CONTRACT shall be completed in sufficient detail to allow easy identification of the coverages, limits, and coverage amendments that are described above. In addition, the insurance companies must be accurately listed along with their A.M. Best

Identification Number (''AMB#''). The name, address and telephone number of the issuing insurance agent or broker must be clearly shown on the certificate of insurance as well.

Due to the space limitations of most standard certificates of insurance, it is expected that an addendum will be attached to the appropriate certificate(s) in order to provide the space needed to show the required information.

In addition to providing certificates of insurance, the concessioner, upon written request of the Director, shall provide the Director with a complete copy of any of the insurance policies (or endorsements thereto) required herein to be maintained by the concessioner.

VII. Statutory Limits

In the event that a statutorily required limit exceeds a limit required herein, the higher statutorily required limit shall be considered the minimum to be maintained.

Dated: April 27, 2000.

Linda Canzanelli,

Acting Associate Director, Park Operations and Education, National Park Service.

[FR Doc. 00–10984 Filed 5–3–00; 8:45 am]

BILLING CODE 4310–70–P

Federal Register

Thursday,
May 4, 2000

Part IV

Department of Labor

Office of Federal Contract Compliance Programs

41 CFR Parts 60–1 and 60–2

Government Contractors, Affirmative Action Requirements; Proposed Rule

DEPARTMENT OF LABOR

Office of Federal Contract Compliance Programs

41 CFR Parts 60–1 and 60–2

RIN 1215–AA01

Government Contractors; Affirmative Action Requirements

AGENCY: Office of Federal Contract Compliance Programs (OFCCP), ESA, Labor.

ACTION: Notice of proposed rulemaking.

SUMMARY: The Office of Federal Contract Compliance Programs (OFCCP) is proposing to revise certain regulations implementing Executive Order 11246, as amended. The Executive Order prohibits Government contractors and subcontractors, and federally assisted construction contractors and subcontractors, from discriminating in employment, and requires these contractors to take affirmative action to ensure that employees and applicants are treated without regard to race, color, religion, sex, or national origin. Today's proposal would refocus, revise, and restructure 41 CFR Part 60–2, the regulations that establish the requirements for affirmative action programs, and related sections in 41 CFR Part 60–1. The proposal would refocus the regulatory emphasis from the development of a written document that complies with highly prescriptive standards, to a performance based standard that effectively implements an affirmative action program into the overall management plan of the contractor. The proposal also would introduce a new tool that would aid contractors in assessing their pay and other personnel practices, while increasing the efficiency and effectiveness of program monitoring. This tool, the Equal Opportunity Survey, would be primarily submitted electronically.

The proposal would help fulfill the Administration's Equal Pay Initiative to provide contractors with the necessary tools to assess and improve their pay policies. The proposal also would help fulfill the Department's goal of increasing the number of federal contractors brought into compliance. A means to fulfill that goal is for OFCCP to more effectively monitor the pay practices of federal contractors.

In addition, today's proposal to revise and restructure the regulations relating to affirmative action programs is part of OFCCP's continuing efforts to meet the objectives of the Reinventing Government Initiative. These objectives include obtaining input from those most directly affected by the regulations, reducing paperwork and compliance burdens wherever possible, more effectively focusing Government resources where most needed in order to administer the law most efficiently, making the regulations easier to understand by streamlining and simplifying them and writing them in plain language, and updating the regulations to accommodate modern organizational structures and to take advantage of new technologies.

DATES: To be assured of consideration, comments must be in writing and must be received on or before July 3, 2000.

ADDRESSES: Comments should be sent to James I. Melvin, Director, Division of Policy, Planning and Program Development, OFCCP, Room C–3325, 200 Constitution Avenue, N.W., Washington, D.C. 20210.

As a convenience to commenters, public comments transmitted by facsimile (FAX) machine will be accepted. The telephone number of the FAX receiver is (202) 693–1304. To assure access to the FAX equipment, only public comments of six or fewer pages will be accepted via FAX transmittal. Receipts of FAX transmittals will not be acknowledged, except that the sender may request confirmation of receipt by calling (202) 693–0102 (voice), (202) 693–1308 (TTY).

FOR FURTHER INFORMATION CONTACT: James I. Melvin, Director, Division of Policy, Planning and Program Development, OFCCP, Room C–3325, 200 Constitution Avenue, N.W., Washington, D.C. 20210. Telephone (202) 693–0102 (voice), (202) 693–1308 (TTY). Copies of this proposed rule in alternative formats may be obtained by calling (202) 693–0102 (voice) or (202) 693–1308 (TTY). The alternative formats available are large print, electronic file on computer disk, and audiotape. The proposed rule also is available on the Internet at http://www.dol.gov/dol/esa.

SUPPLEMENTARY INFORMATION:

Background

a. History of the Part 60–2 Regulations

Executive Order 11246, as amended, requires that Federal Government contractors and subcontractors ''take affirmative action to ensure that applicants are employed, and that employees are treated during employment, without regard to their race, color, religion, sex, or national origin.'' Affirmative action under Executive Order 11246, as amended, connotes more than passive nondiscrimination; it requires that contractors take affirmative steps to identify and eliminate impediments to equal employment opportunity.

The principles and concepts underlying the current blueprint for affirmative action under Executive Order 11246, as amended, have their origins in Plans for Progress (PfP), conceived and successfully implemented in 1961 by a group of 300 leading corporations committed to achieving equal employment opportunity through voluntary affirmative action. Each company adopted a ''plan for progress'' for the corporation as a whole and for each of its individual establishments. These plans for progress, as a management tool for achieving equal employment opportunity, were the precursors to the current written affirmative action programs (AAPs).

In July 1969, after having successfully tested this model over an eight-year period, PfP merged with the National Alliance of Business, and turned its focus to youth employment. Seven months later, on February 7, 1970, the Office of Federal Contract Compliance incorporated PfP's Guidelines on Affirmative Action as the centerpiece of its affirmative action program regulations applicable to larger Federal nonconstruction contractors. These regulations—41 CFR Part 60–2—have served as reasonable and successful tools that aid in breaking down barriers to equal employment opportunity for women and minorities without impinging upon the rights and reasonable expectations of other members of the workforce.

b. Overview of the Affirmative Action Program

The current regulations require Federal Government nonconstruction contractors and subcontractors with 50 or more employees and a contract of $50,000 or more to prepare and implement a written AAP for each of their establishments. The basic elements of the AAP are discussed in more detail in the Section-by-Section Analysis which follows, but an overview is provided here for ease of understanding.

Under the current regulations, the written AAP must contain several elements. One element of the AAP is a ''workforce analysis,'' which essentially is a snapshot of all employment at the establishment. The snapshot shows all the job titles, arranged by department or other organizational unit, and reveals the number of employees in each job by gender, race, and ethnicity. Examination of the employment patterns documented in the workforce analysis is intended to

alert the contractor to potential problems of discrimination and inadequate affirmative action.

The current written AAP also must contain a multi-step analysis to identify whether minorities or women are being employed at a rate that would be expected based upon their availability for employment. This analysis is focused on contractor-defined ''job groups,'' which consist of one or a group of jobs that are similar in content, wage rates, and opportunities. The contractor utilizes census and other available demographic data to conduct a prescribed ''eight factor analysis,'' to calculate the number of qualified women and minorities that should be available in the labor market to work in each job group. The contractor then compares the number of minorities and women it actually employs in each job group against the calculated ''availability'' for that group to determine whether minorities and women are being employed at a rate reasonably expected given their availability to work in those jobs. If so, the analysis is concluded. If women and minorities are being employed at a rate lower than reasonably would be expected given their availability to work in those jobs, the contractor determines that ''underutilization'' exists. Underutilization means that the representation of minorities or women in a specific job group is less than reasonably would be expected given the availability of candidates.

If these analyses show underutilization in certain job groups, the contractor must analyze its policies, practices, and procedures to determine possible causes, and take corrective action that is designed to overcome the underutilization. For example, the AAP would include outreach and other affirmative steps precisely tailored to eliminate barriers to equal employment opportunity, and, when necessary, goals and organizational objectives to measure success toward achieving that result.

In addition to the quantitative analyses, the current AAP contains an explanation of the nondiscrimination and equal opportunity policies the contractor has established, the methods elected to implement and disseminate those policies, and the recruitment and community outreach programs implemented. The contractor is instructed to identify various problem areas in the AAP together with plans for appropriate solutions.

The affirmative action measures prescribed by the regulations, including the establishment of goals, are intended to implement Executive Order 11246 that contractors ''take affirmative action to ensure that applicants are employed, and that employees are treated during employment, without regard to their race, color, religion, sex or national origin.'' These requirements are rooted in many significant governmental interests, including: that Federal funds may not be used to support discrimination (*e.g., Cannon* v. *University of Chicago,* 441 U.S. 677 (1979)); that the Federal Government may rightfully fix the terms upon which it will make needed purchases, including that it may expect more of Government contractors than is expected of employers generally (*e.g., Perkins* v. *Lukens Steel Co.,* 310 U.S. 113 (1940)); and that the Federal Government's suppliers should not increase the costs of Government work and delay programs by excluding from the labor pool available minority and female workers (*Contractors Association of Eastern Pennsylvania* v. *Secretary of Labor,* 442 F2d 159 (3d Cir. 1971), *cert. denied,* 404 U.S. 854 (1971)).

The goals component of the AAP was not designed for, nor may it properly or lawfully be interpreted as, permitting or requiring unlawful preferential treatment or quotas with respect to persons of any race, color, religion, sex, or national origin. The regulations specifically prohibit employment discrimination based on these factors, and affirmative action goals may not be used to impose a quota or preference based on race, color, religion, sex, or national origin.

The policy and practice of the agency is to measure the compliance of the contractor by evaluating the steps the contractor took to analyze its policies, practices, and procedures, and the good faith efforts the contractor has undertaken to overcome any underutilization found and to meet the goals established to correct underutilization. Under that policy and practice, moreover, a contractor will not be charged with a violation of the Executive Order solely because the goals were not met.

c. The Proposed Revision

The basic structure of the Part 60–2 written AAP regulations has remained essentially unchanged since the regulations first were promulgated in 1970. Feedback over the years, from the regulated community of contractors, from groups representing minorities and women, and from OFCCP field staff, suggested that portions of the regulations should be improved. For instance, contractors and some OFCCP staff as well, long have been critical of the eight factors that must be considered in determining the ''availability'' of minorities and women for employment in the contractor's workplace. In addition, the workforce analysis requirement has received its share of criticism as being the most expensive and time consuming portion of the AAP, while also being an analytical tool out of touch with the changing nature of the workforce. Therefore, under the umbrella of Executive Order 12866 and the Clinton Administration's Reinventing Government Initiative, a regulatory team was appointed several years ago to review the Part 60–2 regulations.

The regulatory team began work with a number of objectives. These included eliminating outdated, duplicative and unnecessary provisions; eliminating unnecessary compliance burdens by reducing paperwork, providing more flexibility to contractors, and seeking greater consistency between compliance requirements and standard business practices; improving the quality and effectiveness of contractors' affirmative action efforts, and the rate of voluntary compliance; making it easier for contractors to understand and comply with the regulations by simplifying the requirements and stating them as clearly as possible; enhancing the ability of OFCCP personnel to monitor compliance in a time of smaller Government and diminishing resources; and reducing unnecessary friction between contractors and OFCCP compliance officers.

More recently, an additional objective of the proposed revision has been to advance the Department of Labor's goal of pay equity; that is, ensuring that employees are compensated equally for performing equal work. Today working women earn just 76.5 cents on the dollar compared to men. Black women earn 64 cents on the dollar compared to White men, and Hispanic women earn only 55 cents. The pay disparity exists even after accounting for differences in jobs, education, and experience. This NPRM encourages contractors to analyze their own compensation packages to ensure that all their employees are being paid fairly.

As is prescribed by Executive Order 12866, and in accordance with the established rulemaking practices of OFCCP, prior to drafting this notice of proposed rulemaking (NPRM) OFCCP engaged in extensive consultations with its stakeholders regarding the regulatory requirements for the AAP. In the fall of 1994, officials in OFCCP invited contractors, civil rights groups, and women's rights groups to participate in roundtable discussions as to whether and to what extent the required contents of the AAP should be changed. Front

line staff in regional and district offices of OFCCP also submitted recommendations for changing the regulatory requirements for the AAP. As a result of these preliminary discussions and recommendations, the agency identified a number of issues desirable to address through regulatory reforms.

In the Spring of 1995, OFCCP officials convened a series of public meetings with the agency's stakeholders to elicit their recommendations for clarifying and simplifying the regulations at 41 CFR Part 60–2. Several hundred representatives from the contractor, civil rights, and women's rights communities attended these ''partnership'' meetings, which were held in Dallas, Pittsburgh, San Diego, and Chicago. In addition, during this consultation process, interested parties submitted written comments and suggestions for revising the regulatory requirements for the AAP. Thus, over an 18 month period OFCCP engaged in broad consultations that focused on changing the regulatory requirements for the AAP. Further stakeholder meetings, at which elements of the regulatory package were discussed, have been held over the past year.

OFCCP analyzed the comments and recommendations that were received. Then OFCCP thoroughly examined and pilot-tested the available options for effecting the desired changes in the regulations. Based on this analysis, OFCCP drafted the NPRM being published today.

This is the second step in revising the basic regulations implementing Executive Order 11246, as amended. First, on August 19, 1997, OFCCP published (62 FR 44174) revisions to the regulations at 41 CFR Part 60–1, which eliminated a certification requirement, clarified sanction authority, streamlined the compliance evaluation process, and made several other changes. Those revisions are improving agency efficiency and enforcement effectiveness, while reducing burdens on contractors.

Today's proposal covers the regulations at 41 CFR Part 60–2, which address the content of AAPs. We also propose a corresponding revision of § 60–1.12, which covers records that must be retained, and § 60–1.40, which covers who must develop and maintain an AAP.

This proposal represents a significant departure from OFCCP's existing approach to implementing Government contractor nondiscrimination and affirmative action obligations under Executive Order 11246. After drafting and considering several alternative revisions of Part 60–2 we opted in favor of this new direction, which we believe will greatly benefit the interests of contractors, minorities and women, and OFCCP itself. Our proposed new approach to the nondiscrimination and affirmative action regulations is based upon the following principles:

- Contractor workplaces should be free of discrimination.
- Contractors should have greater freedom to design their AAPs around their unique business structure and needs.
- OFCCP would like to place greater focus on contractors' actual nondiscrimination and affirmative action activities, and less focus on item-by-item review of whether contractor AAPs meet detailed technical standards.
- OFCCP can do a better job of enforcing the Executive Order if it has detailed and up-to-date data up-front about the contractor's hiring and advancement of minorities and women and its affirmative action performance.
- The regulatory requirements should lead to heightened awareness by contractor officials of each establishment's equal employment opportunity and affirmative action performance.
- Heightened awareness of performance, coupled with increased compliance presence by OFCCP, should dramatically improve the level of compliance.

Accordingly, as we outline in more detail in the Section-by-Section Analysis below, the proposal contains a number of new approaches.

We propose to greatly reduce the number of elements required to be included in contractor AAPs. Beyond the required elements, contractors would include in their AAPs those elements and actions that they considered necessary and appropriate to carry out the nondiscrimination and affirmative action commitments of their Government contracts.

We propose to make it easier for contractors to prepare the remaining required elements of an AAP in two ways. First, we have sought to streamline requirements, for example, by proposing that contractors consider only two availability factors instead of the current eight. Second, we have sought to enhance contractor understanding of the rules by stating the requirements in clear terms, and by providing in the preamble explanations and illustrations of how the requirements are intended to be applied.

As the proposal makes clear, an AAP consists of a diagnostic component through which the contractor analyzes its workforce to determine whether there are problems of underutilization that need to be addressed, an action-oriented programs component through which the contractor takes steps to address the identified problems, and an evaluative component through which the contractor establishes and uses internal auditing and reporting systems to ensure that the diagnostic and action-oriented components of the AAP are effective.

Under the proposed regulations, an AAP is effective when the diagnostic component is accurately identifying problem areas, and when good faith efforts are being actively undertaken through action-oriented programs to effectively address those areas. Together, these components would form the cornerstone of the new AAP.

To help OFCCP better monitor compliance, and to further the objective of contractor self-analysis, we propose a new Equal Opportunity Survey, to be submitted by a subset of nonconstruction establishments each year. The Survey would provide OFCCP with the data necessary to more effectively identify contractor establishments that may have problems with their Executive Order 11246 obligations, and to select those contractors for further evaluation under OFCCP's new compliance evaluation procedures.

Finally, the proposal performs several ''housekeeping'' functions with respect to the Part 60–2 regulations. A final rule was published on December 30, 1980 (45 FR 86215; corrected at 46 FR 7332, January 23, 1981), but was stayed in accordance with Executive Order 12291 on January 28, 1981 (46 FR 9084). This rule later was stayed indefinitely on August 25, 1981 (46 FR 42865), pending action on an NPRM published on that same date (46 FR 42968; supplemented at 47 FR 17770, April 23, 1982). No further action on the August 25, 1981, proposal, or consequently on the 1980 stayed final rule, has been taken. Both the 1980 final rule and the 1981 proposal addressed 41 CFR Part 60–2. To avoid conflict with the NPRM published today, OFCCP proposes to withdraw Part 60–2 of the 1980 final rule, and hereby withdraws the 1981 and 1982 NPRMs in their entirety. Additionally, consistent with the President's 1998 ''Plain Language'' Memorandum, we have replaced the word ''shall'' with ''must'' or ''will'' as appropriate to the context.

Section-by-Section Analysis

Section 60–1.12 Record Retention

OFCCP published a final rule revising 41 CFR Part 60–1 on August 19, 1997. The revision proposed today would

further amend the record retention provisions in § 60–1.12 to harmonize them with the proposed changes to Part 60–2.

Current paragraph (b) recites that contractors subject to the ''written'' affirmative action program (AAP) requirement shall maintain and preserve their current and immediately prior AAPs and documentation of good faith effort. Consistent with today's proposed changes to Part 60–2, which de-emphasize the written nature of the AAPs, we propose to remove the modifier ''written'' from this section.

Paragraphs (c) and (d) would be redesignated as paragraphs (d) and (e) respectively, and the first sentence of the newly designated paragraph (d) would reflect the addition of a new paragraph (c). The new paragraph (c) would require that the contractor be able to identify:

- the gender, race, and ethnicity of each employee; and,
- where possible, the gender, race, and ethnicity of each applicant

in any records the contractor maintains pursuant to this section. In addition, the contractor would be required to supply this information to OFCCP upon request. This provision is necessary for OFCCP to verify EEO data. Although not expressly stated in the regulations, OFCCP traditionally has required contractors to maintain and submit upon request information about the gender, race, and ethnicity of their applicants and employees. *See, for example,* OFCCP's Federal Contract Compliance Manual at Section 2H01 and Figure 2–2. Methods for collecting data on gender, race, and ethnicity are discussed in Question and Answer 88 in the ''Adoption of Questions and Answers to Clarify and Provide a Common Interpretation of the Uniform Guidelines on Employee Selection Procedures,'' 44 F.R. 11996, 12008 (March 2, 1979).

Section 60–1.40 Affirmative Action Programs

Current § 60–1.40 describes at paragraph (a) which contractors are required to develop ''written'' AAPs. Paragraph (a) also discusses the importance of identification of problem areas and the evaluation of opportunities for the utilization of minority employees. Finally, paragraph (a) requires that AAPs contain specific steps for addressing identified problems, and a table of job classifications detailing jobs, duties, rates of pay, and other pertinent information. Paragraph (b) of the current regulation describes utilization evaluations, and paragraph (c) describes when AAPs are to be developed and how they are to be maintained. Current paragraph (c) also indicates that the required information pertaining to the AAP is to be made available to representatives of the Director of OFCCP.

We propose several modifications to § 60–1.40. The proposal retains in paragraph (a) current standards for who must develop and maintain an AAP, although the standards are slightly edited for clarity. Additionally, as we proposed for § 60–1.12(b), we would remove from paragraph (a) references to ''written'' AAPs.

The remainder of existing paragraph (a), as well as all of current paragraphs (b) and (c), would be removed from this section. Much of the material is outdated, in that it references only employment problems relating to minorities, and not those relating to women. As appropriate, we have updated the material and incorporated it into Part 60–2 with the rest of the regulatory material relating to contents of AAPs.

In addition, to further consolidate requirements relating to AAPs in Part 60–2, specific information as to when the obligation to develop and maintain an AAP arises, which is addressed in current paragraph (c), has been significantly abbreviated and moved to proposed § 60–2.1(c). Finally, we are proposing a new paragraph (b), which directs construction and nonconstruction contractors to the regulations that establish the affirmative action requirements applicable to each.

Part 60–2

Subpart A—General

Section 60–2.1 Scope and Application

Existing § 60–2.1 describes the purpose and scope of the regulations contained in 41 CFR Part 60–2. Current paragraph (a) specifies which contractors are required to develop AAPs and provides a general overview of the regulations contained in Part 60–2. Paragraph (b) of the current regulation states that relief, including back pay where appropriate, must be provided for an affected class in all conciliation agreements entered into to resolve violations uncovered during a compliance review. Paragraph (b) also states that an ''affected class'' problem must be remedied in order for a contractor to be considered in compliance, and indicates that a contractor may be subject to the enforcement procedures set forth in § 60–2.2 for its failure to remedy past discrimination.

Consistent with the goals of streamlining and simplifying the regulations, the proposal would revise and restructure § 60–2.1. The proposal would revise paragraph (a) by limiting the language to a brief description of the scope of the regulations contained in Part 60–2.

The proposal would delete as redundant the contents of paragraph (b) of current § 60–2.1, because the requirement that conciliation agreements include provisions for back pay and other remedies also is set forth in § 60–1.33. The removal of the back pay and affected class language from paragraph (b), however, is not intended to affect OFCCP's ability to recover back pay or other affirmative relief for victims of discrimination.

The proposal also would delete the historical reference to ''Revised Order No. 4,'' the predecessor to the current Part 60–2, as it would not be appropriate or necessary in light of the changes proposed to be made to Part 60–2.

Paragraph (b) in proposed § 60–2.1 would specify who must develop an AAP; it would repeat the standards found in § 60–1.40, because recitation of the scope of coverage is important for completeness in both parts of the regulation.

The proposal would add a paragraph (c) that specifies that AAPs must be developed by the contractor within 120 days from the commencement of the contract. This requirement was previously set out in 41 CFR 60–1.40(c). Since Part 60–2 addresses the requirements of AAPs, it appears more appropriate to include information specifying when the obligation to develop AAPs begins as part of Part 60–2.

The proposal would add a paragraph (d) describing who is included in affirmative action programs. Proposed subparagraph (2) provides three options for contractors with fewer than 50 employees at a particular establishment to account for those employees for AAP purposes. Proposed subparagraph (3) is designed to clarify that the AAP at the establishment that makes the selection decision is the appropriate establishment for inclusion of their selectees. This is particularly important for corporate headquarters AAPs, since selection decisions are likely to be made at corporate headquarters for employees who are assigned to other establishments within the corporation. This reflects OFCCP's ''corporate initiative'' (53 FR 24830, June 28, 1988). Paragraph (e) of the proposed regulation explains how to identify employees who

are included in AAPs at establishments other than where they are located.

Section 60–2.2 Agency Action

Paragraph (a) of existing § 60–2.2 deals with agency approval of AAPs. The entire paragraph would be revised for clarity, and a few technical changes (such as substituting ''Deputy Assistant Secretary'' for ''Director'') would be made as well. No substantive change is intended.

Paragraph (b) of existing § 60–2.2 deals with responsibility determinations. A few technical changes similar to those in paragraph (a) would be made, but no substantive changes are proposed for paragraph (b) at this time. Pursuant to the authority set forth in 5 U.S.C. 552(b)(3)(A), which allows Federal agencies to alter ''rules of agency organization, procedure, or practice'' without notice and comment, OFCCP is not accepting comments on paragraph (b).

Paragraphs (c) and (d) of the current § 60–2.2 address show cause notices and other enforcement procedures for a contractor's failure to develop an AAP as prescribed in the regulations. Consistent with the goals of streamlining and simplifying the regulations, the proposal would delete as superfluous paragraphs (c) and (d) because the subjects are also addressed in §§ 60–1.26 and 60–1.28.

Subpart B—Purpose and Contents of Affirmative Action Programs

Section 60–2.10 General Purpose and Contents of Affirmative Action Programs

The current § 60–2.10 describes an AAP as a set of specific and result-oriented procedures to which a contractor commits itself to apply every good faith effort. It generally describes the contents of AAPs and states that the good faith efforts must be directed to correct the deficiencies and achieve prompt and full utilization of minorities and women.

A complete rewrite of § 60–2.10 is proposed. The rewrite is intended to convey that an AAP should be considered a management tool—an integral part of the way a corporation conducts its business. The proposed revision emphasizes the philosophy OFCCP intends to convey throughout the regulation, that affirmative action is not to be a mere paperwork exercise but rather a dynamic part of the contractor's management approach. Paragraph (a) of proposed § 2.10 states that the premise underlying AAPs is that absent discrimination, a contractor's workforce would be expected to generally reflect the available qualified labor force. The proposed revision explains that, in addition to identifying and correcting underutilization, AAPs also are intended to institutionalize the contractor's commitment to equality in every aspect of employment. AAPs institutionalize the contractor's commitment to equality by establishing procedures to monitor and examine the contractor's employment decisions and compensation systems. AAPs establish these procedures to ensure that the contractor's employment decisions and compensation systems are free of discrimination.

Paragraph (b) of proposed § 60–2.10 outlines the required elements of an AAP. Contractors, thus, at the outset, can get a general sense of what is required for an AAP. It may also prove useful when a contractor is checking to see if all of the required AAP elements have been addressed in its AAP.

Finally, the proposal would add a paragraph (c) requiring that contractors maintain and make available to OFCCP documentation of their compliance with §§ 60–2.11 through 2.17.

Section 60–2.11 Organizational Profile

The current § 60–2.11 is entitled ''Required utilization analysis.'' It contains an introductory paragraph which identifies broad job areas (EEO–1 categories) in which racial and ethnic minorities or women are likely to be underutilized, and sets forth in lettered paragraphs the core contents of a written AAP. Proposed § 60–2.11 would address only paragraph (a) of the current regulation, which deals with the workforce analysis. Paragraph (b) of the current regulation, which addresses the job group analysis, would be revised and moved to new § 60–2.12 discussed below in this preamble. The introductory paragraph of current § 60–2.11 would be deleted as outdated and unnecessary.

Paragraph (a) of current § 60–2.11 provides that a workforce analysis is a listing of job titles (not job groups) ranked from the lowest paid to highest paid within each department or similar organizational unit. The workforce analysis also shows the lines of progression or promotional sequences of jobs, if applicable. If no lines of progression or usual promotional sequences exist, job titles are listed by departments, job families or disciplines, in order of wage rates or salary ranges. For each job title, the workforce analysis must reflect the wage rate or salary range, and the number of incumbents by race, ethnicity, and sex. In short, the workforce analysis is a map pinpointing the location of jobs and incumbent employees and their relationship to other jobs and employees in the contractor's workforce.

During the consultation process, several contractor representatives criticized the current workforce analysis regulation. Some felt that the requirement to present a hierarchical array of jobs by job title and by pay for departments or organizational units, along with lines of progression, is too burdensome. These contractor representatives recommended that the workforce analysis be eliminated as a required element of the AAP.

Other contractor representatives contended that the current regulation does not permit contractors to capture the structural characteristics of today's workforces, and that in many instances contractors develop ''artificial'' workforce analyses solely for the purpose of complying with the regulations. Specifically, they asserted that the current regulation does not recognize the increasing use of the fluid team structure (*e.g.,* a multi-disciplinary team drawn from several components of an organization to work for a limited time on a project), does not allow contractors to indicate that a job is part of a chain of command outside of the establishment (*e.g.,* sales personnel who report directly to a sales manager in another office), and is not meaningful when small numbers of employees work at remote locations (*e.g.,* small branch banks). These critics of the current workforce analysis urged OFCCP to revise the regulations to permit contractors to base their workforce analyses on how their businesses actually are organized, using data that are readily available and compiled to meet other business needs. To that end, they urged removal of the current geographical restriction that the workforce analysis (indeed the entire AAP) cover a single establishment, and revision of the workforce analysis regulation so as to permit contractors to: (1) Include several small locations in one workforce analysis (and corresponding AAP; this sometimes is referred to as a ''consolidated'' AAP); (2) prepare a workforce analysis (and AAP) for a group or groups within a single establishment; or (3) prepare a single workforce analysis (and AAP) based on a business function or a line of business, without regard to the geographic locations of the establishments and employees (sometimes referred to as a ''functional'' AAP).

Other contractor representatives were satisfied with the current workforce analysis requirement. Some observed that ''wholesale changes'' in the AAP format could be costly for those

contractors that have been developing the AAP for many years in accordance with the current regulatory requirements.

A central function of the workforce analysis, and any substitute, is to provide a picture of a contractor's organizational structure. The picture enables an individual reviewing equal employment opportunity at the establishment to understand how the establishment functions. Adding gender, race, and ethnicity to the picture provides a graphic representation of where minorities and women may be underrepresented or concentrated, which permits preliminary review for potential discrimination and the need for affirmative action. This graphic representation is useful to contractors engaging in self analysis, and it is useful to OFCCP's compliance officers. OFCCP believes that the concept is well worth retaining.

In response to the concerns discussed above, however, OFCCP has attempted to ''reengineer'' the workforce analysis into a shorter, simpler format which we propose to call an ''organizational profile.'' The organizational profile is described in proposed § 60–2.11(b)(1). In basic terms, the organizational profile is an organization chart for the establishment, showing each of the organizational units and their relationships to one another, and the gender, race, and ethnic composition of each organizational unit. Unlike the current workforce analysis, the profile would focus only on organizational units; it would not require the identification of individual job titles with the exception of the supervisor, if any. Likewise, reporting of race, sex, and salary information by job title would be eliminated.

In drafting the proposed rule we have attempted to avoid a minutely itemized prescription for the organizational profile. Thus, we specify only that the profile is ''a detailed organizational chart or similar graphical presentation of the contractor's organizational structure,'' and that it must identify: each organizational unit; the job title, gender, race, and ethnicity of the unit supervisor; and the gender, race, and ethnic composition of the total employees in each unit. Our intent is that the profile be presented in a visual, rather than narrative, format, and that it account for all elements of the establishment's workforce.

Beyond those basic requirements, however, the proposal leaves contractors substantial latitude to present the organizational profile in a manner that best fits their operational needs. In most cases, contractors should be able to use existing organizational charts as the core for their profiles. The only additional work required would be to annotate the charts with information about supervisors, and with the gender, race, and ethnic composition of each unit.

A key definitional question is what is meant by the term ''organizational unit.'' As we set forth in section (b)(2) of the proposed rule, an organizational unit is any component that is part of the contractor's corporate structure. In a more traditional organization, an organizational unit might be a department, division, section, branch, group, or similar unit. Typically, such a unit would be headed by a supervisor. In a less traditional organization, an organizational unit might be a project team, job family, or similar unit. Such a unit might not have a direct supervisor.

Following is a sample organizational profile. This sample is provided for illustrative purposes only, and should not be construed to represent a required format or template.

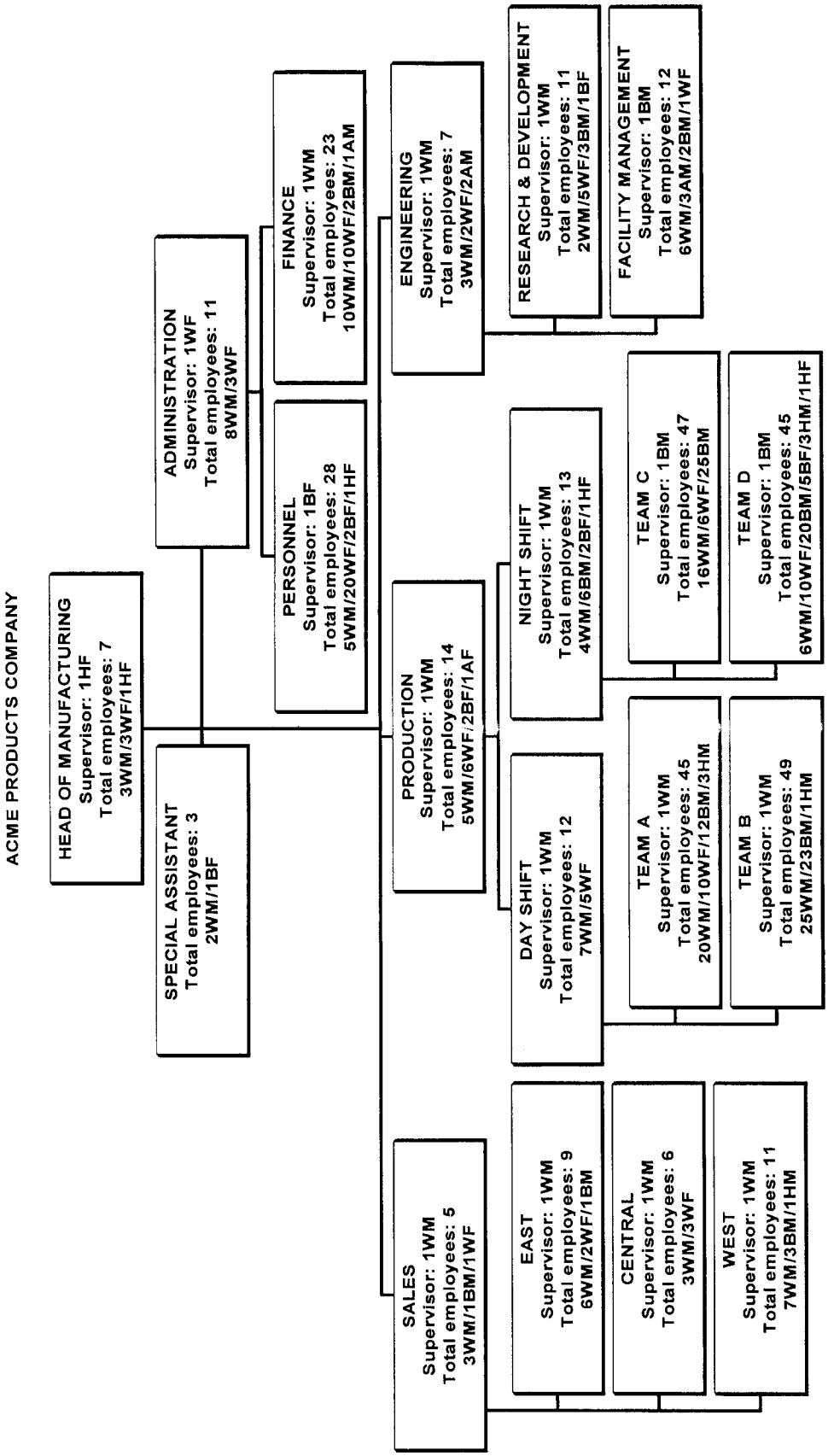

In OFCCP's estimation the proposed organizational profile simplifies and improves upon the existing workforce analysis. The proposed rule's focus on actual organizational units, and particularly the notion that the core of

the organizational profile can be the contractor's actual organizational chart, should result in the profile being more accurate, more useful, easier for contractors to produce, and significantly shorter, than the workforce analysis it would replace. These changes should benefit both contractors and OFCCP.

During the consultations it was asserted that the current regulations do not provide contractors the flexibility to report on their organizations as they actually exist, and that this results in contractors creating special report formats solely for AAP purposes. Because the proposed rule permits, indeed encourages, the use of existing organizational structures and organizational charts, the asserted practice of creating special report formats should diminish, thus reducing contractor burden. In turn, if the organizational profile more closely reflects the actual organization of the establishment, it should be a more useful and reliable analytical tool.

Finally, as noted above, under the proposal the organizational profile would not require the itemization of individual job titles, or the reporting of gender, race, ethnicity, and salary information by job title. This will greatly reduce the volume of the organizational profile, as compared to the existing workforce analysis (which often is one of the largest sections of the AAP).

Regarding the structure of the AAP, except as provided in 60–2.1(d), OFCCP decided not to adopt the recommendation that would allow for the development of a ''consolidated'' or ''functional'' AAP at this time. Although some of the concepts may have merit, they appear to also have shortcomings that will require lengthy and substantive consultation among stakeholders.

Finally, in subsection (c)(4), the minority group designations would be changed to conform to the designations of minorities currently used in the EEO–1 report. At a later date, OFCCP intends to revisit the racial and ethnic designations used in the regulations at 41 CFR Chapter 60 to render them consistent with the revised standards set forth in OMB's Statistical Policy Directive No. 15, Race and Ethnic Standards for Federal Statistics and Administrative Reporting (62 FR 58782, October 30, 1997). OFCCP will coordinate any changes in these designations with the Equal Employment Opportunity Commission (EEOC) so that recordkeeping and reporting requirements for both agencies are compatible.

Section 60–2.12 Job Group Analysis.

[Current § 60–2.12 entitled ''Establishment of goals and timetables'' would be revised, renamed, and moved to § 60–2.16 as discussed below in the preamble.]

Contractors use the job group analysis for combining job titles in their workforce. This is the first step in comparing the representation of minorities and women in the contractor's workforce with the estimated availability of qualified minorities and women who could be employed. When the representation of minorities or women within a job group is less than their availability by some identifiable measure (see discussion of § 60–2.16, below) the contractor must establish goals.

The reason for combining job titles is to organize the workforce into manageable size groups to facilitate analysis, while still maintaining elements of commonality among the jobs grouped together. The jobs included in a job group must have elements in common, i.e., similar job duties, similar compensation, and similar opportunities for advancement within the contractor's workforce. Contractors have considerable discretion in determining which jobs to combine, but the resulting job groups must contain jobs with the requisite common elements. If the job groups are inappropriately drawn, the availability and utilization analyses based on those job groups will be flawed.

The current regulations (§ 60–2.11(b)) define a job group as one or more jobs having similar content, wage rates and opportunities. The structure of the job group analysis in the current regulation often is criticized by contractors and by OFCCP compliance staff. Some view the instruction to combine jobs by similar content, wage rates and opportunities as too general to provide clear, consistent guidance. The result, according to this appraisal, is inconsistent interpretations among different OFCCP offices, and needless disagreements between contractors and compliance officers about the grouping of particular jobs. Others say that the current regulation does not give larger contractors enough flexibility to tailor the job group analysis to the idiosyncrasies of different organizational structures, places too much emphasis on tracking lines of progression, and precludes compliance officers from making fair and accurate evaluations of contractor achievements. Further, critics claim that for smaller contractors, the existing job group analysis regulation often results in the formation of job groups that are too small to conduct a meaningful utilization analysis.

Despite the criticisms of the current job group regulation, contractors and OFCCP staff have expressed divergent views on whether it should be revised, and if so, how. During the consultation process, some contractor representatives recommended that OFCCP retain the job group regulation as it currently exists. Those who favored keeping the current regulatory approach observed that the current approach of contractor-developed job groups can best accommodate the diversity in organizational structures that exists among contractor establishments.

Other contractor representatives supported the idea of basing job grouping on the standard EEO–1 categories, a concept which OFCCP explored during the consultation process. The term ''EEO–1 categories'' refers to nine broad occupational groupings: officials and managers, professionals, technicians, sales workers, office and clerical, craft workers (skilled), operatives (semi-skilled), laborers (unskilled), and service workers. These groupings are used in the EEO–1 report (the Employer Information Report), which most employers file annually with the Joint Reporting Committee (an entity composed of OFCCP and the EEOC).

Proponents of the EEO–1 job grouping approach observed that most contractors and employers already are familiar with the EEO–1 categories and that, in practice, those categories already serve as the baseline for most job groups. They asserted that another advantage of EEO–1 category job grouping is that, in many cases, it would address the problem of job groups with too few employees to conduct a meaningful utilization analysis.

Still other contractor representatives recommended that OFCCP revise the regulations in a manner that would allow contractors the option of selecting either approach—the contractor-developed job group prescribed by the current regulations or the EEO–1 category-based job group.

After considerable thought about the wide range of views described above, OFCCP has decided to continue the traditional approach to the job group analysis, as reflected in current § 60–2.11(b), for larger employers (contractors with 150 or more employees). Accordingly, proposed § 60–2.12(b) states that jobs at the establishment with similar content, wage rates, and opportunities, must be combined to form job groups. OFCCP is proposing, at § 60–2.12(e), that smaller employers (contractors with fewer than 150

employees) may use EEO–1 categories as job groups.

In response to criticisms that the current regulations provide inadequate guidance, the proposed regulation would further explain the criteria that the contractor must consider when determining which jobs to combine into job groups. Proposed § 60–2.12(b) states ''similarity of job content refers to the duties and responsibilities of the job titles which make up the job group.'' Further, the proposed regulation provides that ''similarity of opportunities refers to training, transfers, promotions, pay mobility, and other career enhancement opportunities offered by the jobs within the job group.'' Although OFCCP's Federal Contract Compliance Manual contains detailed guidance on job group formation, the agency believes the expanded regulatory definition will address many of the issues that arise when decisions are being made about job groups.

Once the appropriate job groups are determined, proposed § 60–2.12(c) would require the contractor to prepare a list of the job titles that comprise each job group. The paragraph also would reflect the provisions of proposed §§ 60–2.1(d) and (e) relating to jobs located at another establishment.

Proposed § 60–2.12(d) would provide that all jobs located at an establishment must be included in the establishment's job group analysis, except as provided in § 60–2.1(d).

Finally, as noted above, proposed § 60–2.12(e) permits smaller employers to use EEO–1 categories as job groups. OFCCP considers job grouping by EEO–1 category to be simpler both for smaller employers and for OFCCP than grouping by similarity of content, wage rates and opportunities (the scheme found in § 60–2.11(b) of the current regulations and § 60–2.12(b) of this proposal). Contractors that are smaller employers tend to have so few employees that to subdivide them into smaller job groups than required by the EEO–1 categories would make goal setting unreliable. We are expressly soliciting comments on this issue.

Section 60–2.13 Placement of Incumbents in Job Groups

[Current § 60–2.13 entitled ''Additional required ingredients of affirmative action programs'' would be revised, renamed, and moved to § 60–2.17 as is discussed below in the preamble.]

This proposed new section would require the contractor to record separately the percentage of minorities and women it employs within each job group. The current regulations (§ 60–2.11) do not directly address this procedure. This step may seem obvious, but it is expressly included here in an effort to make the process of preparing an AAP clearer to first-time and infrequent users of the regulations and to casual readers.

Section 60–2.14 Determining Availability

[Current § 60–2.14 entitled ''Program summary'' would be moved to § 60–2.31.]

Proposed § 60–2.14 contains the guidelines for determining availability and would replace the regulations that are currently found at §§ 60–2.11(b)(1) and (2). The purpose of the availability analysis is to determine the representation of minorities and women among those qualified (or readily qualifiable) for employment for each job group in the contractor's workforce. Availability is the yardstick against which the actual utilization of minorities or women in the contractor's job group is measured.

Under the current regulation, the contractor is required to compute availability, separately for minorities and for women, for each job group. In determining availability, the contractor must consider each of eight factors listed in the regulations. The factors are similar, but not identical, for minorities and women. Although the contractor must consider all eight factors, it is not required to utilize each factor in determining the final availability estimate. Only the factors that are relevant to the actual availability of workers for the job group in question must be used. Most contractors actually use only a few of the eight factors to compute the final availability estimates.

The ''eight-factor analysis'' for determining availability is one of the most frequently criticized elements of the Executive Order 11246 program. Common complaints among contractors are that the requirements are unnecessarily complex and not sufficiently focused. For instance, critics suggest that factors such as the minority population of the labor area surrounding the facility (factor (1)(i)), the size of the minority and female unemployment force in the labor area surrounding the facility (factors (1)(ii) and (2)(i)), and the percentage of the minority and female workforce as compared with the total workforce in the immediate labor area (factors (1)(iii) and (2)(ii)), are inappropriately broad because they do not focus on the skills needed to perform the particular jobs in the contractor's workplace. Even for jobs for which no special skill is needed, the factor on minority population is criticized because it commingles those who are ready to work with those who are under 16 or over 65 years of age, completely unable to work due to disability, or otherwise unavailable. Similarly, consideration of the existence of training institutions capable of training persons in the requisite skills (factors (1)(vii) and (2)(vii)) is said to focus on those who may be available several years in the future and not on those who can work now. Why, contractors ask, is it necessary to analyze or consider these factors if it is improper to use them?

Accordingly, contractors frequently recommend that the number of factors be limited to the few most commonly used. Contractors further suggest that for ease of application the same availability factors be used for minorities and for women. During our consultations, groups representing minorities and women were not strongly opposed to collapsing the list of factors to concentrate on those that best identify persons available for employment. However, the civil rights and women's groups felt strongly that the concept of affirmative action required consideration of those who reasonably could be trained for a job, as well as those who already have the skills.

Today's proposal would simplify the availability computations by reducing the number of factors from eight to two. The proposed regulation would use the same factors for minorities and for women, but availability would be computed separately for minorities and women for each job group, as is done under the current regulations. Under proposed § 60–2.14(c), the following factors would be considered in determining availability:

(1) The percentage of minorities or women with requisite skills in the reasonable recruitment area, where ''reasonable recruitment area'' refers to the geographical area from which the contractor usually seeks or reasonably could seek workers to fill the positions in question; and

(2) The percentage of minorities or women among those promotable, transferable, and trainable within the contractor's organization, where ''trainable'' refers to employees who could, with appropriate training, become promotable or transferable within the AAP year.

To determine the percentages in § 60–2.14(c)(2), the contractor would undertake one or both of the following steps:

- Determine which job groups are ''feeder pools'' for the job group in question. The feeder pools are job

groups from which individuals are promoted.

• Ascertain which employees could be promoted or transferred with appropriate training.

Example #1: A contractor has a job group of Engineering Managers. Over the past year, all individuals who have been promoted into the Engineering Managers job group have been promoted from only two other job groups: Chemical Engineering Project Leaders and Petroleum Engineering Project Leaders. The Chemical Engineering Project Leaders job group has 100 incumbents, of which 20 are minority and 25 are female. The Petroleum Engineering Project Leader job group also has 100 incumbents, of which 15 are minority and 20 are female. The ''feeder pool'' availability is the total number of minority or female incumbents divided by the total number of incumbents for the two job groups.

Job group	Total incumbents	Minority incumbents	Female incumbents	Minority promotables (in percent)	Female promotables (in percent)
Chem.E PL	100	20	25	20	25
Pet.E PL	100	15	20	15	20

Minority Availability (20 + 15) / (100 + 100) = 17.5%

Female Availability (25 + 20) / (100 + 100) = 22.5%

Example #2: A contractor has a job group of Entry Level Managers. This contractor has a management training program. A review of the training program shows that of the 200 employees in the program last year, 100 completed the program and are eligible for Entry Level Manager positions this AAP year. Of those 100 who completed the program, 45 are minority and 40 are female. The availability in this example is the percentage of minorities or females who completed the training program.

Total individuals eligible for promotion	Minorities eligible for promotion	Females eligible for promotion	Minority availability (in percent)	Female availability (in percent)
100	45	40	45	40

Our experience has shown that these factors are the ones most contractors use to compute availability estimates. Taken together, they reflect contractors' assertions of who is qualified and available for employment. In addition to the percentage of minorities or women in the reasonable recruitment area and within the contractor's workforce who already possess the requisite skills, proposed § 60–2.14(c) would require the contractor to consider the percentage of minorities or women among its employees who could, with appropriate training, become promotable or transferable during the AAP year, when determining availability. This provision is intended to address the recommendations of civil rights and women's groups that the availability computation include consideration of training opportunities. It is a refinement of the requirement in the current regulations (§§ 60–2.11(b)(1)(viii) and (b)(2)(viii)) that the contractor consider the degree of training which it is reasonably able to undertake as a means of making all job classes available to minorities and to women.

Proposed § 60–2.14(e) would require a contractor to define its recruitment area reasonably so as not to exclude minorities and women, and to develop a brief written rationale for selection of that recruitment area. On occasion, defining the recruitment area in a slightly different way can significantly enlarge or reduce the proportion of minorities or women with requisite skills available for employment. In such a case, the contractor would be required to assure that the recruitment area chosen would not have the effect of excluding minorities or women.

Proposed § 60–2.14(f) would require contractors to define the pool of promotable, transferable, and trainable employees in such a way as not to exclude minorities or women, and to develop a brief documented rationale for the selection of the pool. This provision responds to concerns expressed by civil rights and women's groups that a contractor may have relatively low levels of available incumbent minorities and women due to prior discrimination in access to training and employment opportunities in general, and, perhaps, within the contractor's workforce. When barriers to equal employment opportunity have prevented minorities and women from entering the pipeline to promotional consideration, contractors must critically evaluate the criteria they use to identify candidates. Otherwise, generations of minority and female workers, barred from equal consideration in the past, may continue to experience the effects of prior discrimination and lack of affirmative action.

Further, proposed § 60–2.14(d) would require contractors to use the most current and discrete statistical data to conduct its availability analyses. This is addressed in Section 2G05(e) and Appendix 2B of the Federal Contract Compliance Manual. Examples of such information include census data, data from local job service offices, and data from colleges and other training institutions.

When a job group is composed of job titles with different availability rates, proposed § 60–2.14(g) would require the contractor to compute a composite availability estimate. The composite availability figure would represent a weighted average of the availability estimates for all the job titles in the job group.

The composite weighted average availability is computed by determining the percentage of total job group incumbents represented by the incumbents in each job title, multiplying each incumbent percentage by the corresponding availability for that job title, and summing the results. The computation is illustrated by the following job group of professionals with a total of 80 incumbents:

Job title	Number incumbents	Availability (in percent)
Accountant	20	35
Auditor	40	20
Analyst	20	15

1. Accountant = 20/80 incumbents, or .25
Auditor = 40/80 incumbents, or .5
Analyst = 20/80 incumbents, or .25
2. Accountant = .25 × .35 = .0875
Auditor = .5 × .20 = .1
Analyst = .25 × .15 = .0375
3. Composite Availability = .0875 + .1 + .0375 = .225 or 22.5%

The proposed regulation would retain the requirement that contractors determine the availability of total minorities. OFCCP requests comments on whether the regulation should be changed to require the contractor to compute availability for individual minority subgroups and invites commenters to address the following questions:

1. Should contractors be required to compute availability separately for individual minority subgroups as a general rule?

2. Should contractors be required to compute availability for individual minority subgroups only when the minority subgroup represents a specified percentage of the population in the immediate labor area?

3. How large must the minority subgroup population be before the contractor is required to compute the separate availability for minority subgroups?

Section 60–2.15 Comparing Incumbency to Availability

[Current § 60–2.15 entitled ''Compliance status'' would be revised and moved to § 60–2.35, discussed below in the preamble.]

Proposed § 60–2.15 addresses an aspect of the existing regulations that is referred to as the ''utilization analysis,'' and would replace one portion of existing § 60–2.11(b). Proposed § 60–2.15(a) would require the contractor to compare the representation of minorities and women in each job group with their representation among those available to be employed in that group. During compliance reviews, OFCCP typically finds that more minorities and women are available for employment in particular occupations and job groups than are actually employed in those positions. Indeed, OFCCP Regional Directors report that virtually every AAP reviewed by their offices contains one or more job groups in which availability exceeds actual employment. If the availability for a job group is greater than incumbency, and the difference is of a sufficient magnitude, the contractor must establish a goal.

The current regulation refers to the difference between availability and incumbency as ''underutilization,'' which is defined as ''having fewer minorities or women in a particular job group than would reasonably be expected by their availability.'' When this condition exists, the contractor must establish a goal. Under the current practice, contractors are permitted to identify underutilization using a variety of methods, including: the ''any difference'' rule, *i.e.,* whether any difference exists between the availability of minorities or women for employment in a job group and the number of such persons actually employed in the job group; the ''one person'' rule, *i.e.,* whether the difference between availability and the actual employment of minorities or women equals one person or more; the ''80 percent rule,'' *i.e.,* whether actual employment of minorities or women is less than 80 percent of their availability; and a ''two standard deviations'' analysis, *i.e.,* whether the difference between availability and the actual employment of minorities or women exceeds the two standard deviations test of statistical significance. We propose no substantive change from the current regulation. The proposal, which is slightly reworded for clarity, appears at § 60–2.15(b).

Finally, current § 60–2.11(b) specifies that the AAP shall contain ''[a]n analysis of all *major* job groups'' for which underutilization determinations will be made (emphasis added). The regulations do not define ''major,'' nor do they distinguish major job groups from other job groups. Most contractors have treated all job groups as major, and have conducted the analyses for each. This approach correctly reflects that no job groups are so insignificant that further analysis of them should not be performed. Any job group of such insignificance probably should not be considered a job group at all. Accordingly, OFCCP proposes to drop the word ''major,'' thereby requiring that contractors determine availability, compare incumbency to availability, and set placement goals (where comparison of availability to incumbency indicates a need to do so) for all job groups. OFCCP is soliciting comments concerning dropping the word ''major'' from job groups.

Section 60–2.16 Placement Goals

The procedures outlined in the preceding sections of this proposed rule would require a Federal contractor to analyze its workforce and evaluate its employment practices for the purpose of identifying and correcting gender-, race- and ethnicity-based obstacles to equal employment opportunity. Where the need for corrective action is revealed, the AAP must include outreach and other steps precisely tailored to eliminate the barriers disclosed, and placement goals to target and measure the effectiveness of efforts directed towards achieving that result.

In 1970, when the goals requirement first was incorporated into the regulations, the then Office of Federal Contract Compliance recognized that some might misunderstand goals to be quotas which must be achieved, or that gender-, race-, and ethnicity-based preferences were permitted or required in the pursuit of goals. Accordingly, the Office of Federal Contract Compliance squarely addressed these issues in the regulations, stating that: quotas are expressly forbidden; compliance is judged by a contractor's efforts rather than whether goals have been met; and goals should not be used to discriminate against any employee or applicant because of race, color, religion, sex, or national origin. (See, for example, §§ 60–2.12(e), 2.15 and 2.30 of the current regulations, respectively.)

To further clarify and maintain the proper focus of affirmative action in the contract compliance program, OFCCP periodically issued supplemental guidance and instructions explaining the difference between permissible goals, on the one hand, and unlawful preferences, on the other. The latest such guidance is contained in an OFCCP Administrative Notice entitled ''Numerical Goals under Executive Order 11246,'' which was issued in December 1995. The Administrative Notice reiterates a number of critical points about goals, including the following:

- The goals component of the AAP is not designed to be, nor may it properly or lawfully be interpreted as, permitting unlawful preferential treatment and quotas with respect to persons of any race, color, religion, sex, or national origin.
- Goals are neither quotas, set-asides, nor a device to achieve proportional representation or equal results; rather, the goal-setting process is used to target and measure the effectiveness of affirmative action efforts to eradicate and prevent barriers to equal employment opportunity.
- Goals under Executive Order 11246, as amended, do not require that any specific position be filled by a person of a particular gender, race, or ethnicity; instead, the requirement is that contractors engage in outreach and other efforts to broaden the pool of qualified candidates to include minorities and women.
- The use of goals is consistent with principles of merit, because goals do not require an employer to hire a person who does not have the qualifications needed to perform the job successfully, hire an unqualified person in preference to another applicant who is qualified, or hire a less qualified person in preference to a more qualified person.
- Goals may not be treated as a ceiling or a floor for the employment of members of particular groups.

• A contractor's compliance is measured by whether it has made good faith efforts to meet its goals, and failure to meet goals, by itself, is not a violation of the Executive Order.

Against this backdrop, OFCCP today proposes to revise its regulation on the establishment of goals by contractors. Goal setting currently is addressed in § 60–2.12; today's proposal would move the goals provision to § 60–2.16, and would revise the section to provide additional clarity on how to set goals and guidance regarding the use of goals. The substance of current § 60–2.30 also is included in this section.

Under the existing regulations, after determining that there is underutilization of minorities or women in a specific job group, the contractor must establish goals. Existing §§ 60–2.10 and 60–2.12 refer to ''goals and timetables'' to which a contractor's ''good faith efforts'' must be directed to correct deficiencies in the utilization of minorities or women.

The current regulation provides general guidance regarding the establishment of goals. For instance, contractors are required to consider the availability of minorities or women for the job group as revealed by the requisite utilization analysis. Additionally, the current regulation provides that ''goals may not be rigid and inflexible quotas which must be met, but must be goals reasonably attainable by means of applying every good faith effort * * *.'' However, the regulation does not further define the term ''goals,'' nor explain how they should be set.

In order to clarify that AAPs (including goals) involve annual planning, which accounts for changes in the contractor's business, proposed § 60–2.16(c) would require the contractor to establish a ''percentage annual placement goal'' for a particular job group. Thus, under proposed § 60–2.16, the concept of ''timetables'' would not be retained because it implies a requirement of multi-year or ultimate goals.

Further, proposed paragraph (c) would require the contractor to set goals at a level ''at least equal to the availability figure'' derived for minorities or women for the job group at issue. Proposed paragraph (c) is not a new requirement; it is consistent with OFCCP's current practice. To illustrate: If pursuant to § 60–2.14 the contractor determined that the availability of women for employment in a particular job group was 17.3 percent, the contractor would set a goal to place women, during the current AAP year, in (at least) 17.3 percent of the openings in that job group.

The focus on annual planning and the concomitant deletion of timetables in the proposal should not be misunderstood to mean that a contractor must fully resolve all differences between availability and actual utilization within the current AAP year. In many cases (for instance, few hiring opportunities during the year), it would be mathematically impossible to bridge that gap in such a short time. More important, however, is that compliance, as in the past, always is measured by good faith effort, and not by the achievement of a particular numerical result.

The proposal would considerably strengthen existing language so as to reaffirm that goals prescribed by the regulations implementing Executive Order 11246, as amended, are not to be used as quotas which must be achieved through gender-, race-, or ethnicity-based preferences. Although OFCCP does not consider it necessary to repeat verbatim in the regulations the principles set forth in its December 1995 policy statement, the proposed rule is intended to reflect those concepts. The proposed regulation would set forth the principles that govern the establishment and use of placement goals. Specifically, proposed paragraph (e) states that: (1) Quotas are expressly forbidden and that goals are neither a floor nor ceiling for the employment of particular groups; (2) employment selection decisions must be made in a nondiscriminatory manner, and that placement goals do not provide a contractor justification to extend a preference to any individual, select an individual, or to adversely affect an individual's employment status, on the basis of that person's race, color, religion, sex, or national origin; (3) placement goals do not create set-asides for specific groups, nor are they intended to achieve proportional representation or equal results; and (4) placement goals may not be used to supersede merit principles.

Proposed paragraph (f) states that contractors extending an authorized preference for American Indians living on or near a reservation, may reflect such a preference in their placement goals. This provision appears at § 60–2.12(j) of the current regulations. We have added the adjective ''American'' when referring to Indians.

Section 60–2.17 Additional Required Elements of Affirmative Action Programs

The preceding sections of the regulations have focused primarily on the diagnostic component of AAPs—the statistical analyses of the contractor's workforce to identify equal employment opportunity problems. However, meaningful affirmative action also requires that the contractor develop and carry out action-oriented programs to eliminate the identified problems, and establish procedures for monitoring its employment activities to determine whether the AAP is effective.

The current regulations address the action-oriented and evaluative components of AAPs in a section designated ''Additional required ingredients of affirmative action programs.'' The current regulation appears at § 60–2.13. OFCCP proposes to eliminate a number of elements that no longer need to be specifically and separately set forth in regulatory form. The remaining provisions would be moved to § 60–2.17 and would be renamed ''Additional required elements of affirmative action programs.'' Although OFCCP is eliminating these provisions from the mandatory requirements of the AAP, the contractor may voluntarily choose to retain these elements in its program.

First, OFCCP proposes to delete as specific required elements the following items:

§ 60–2.13(a)—reaffirmation of the contractor's EEO policy in all personnel matters;

§ 60–2.13(b)—formal internal and external dissemination of the contractor's EEO policy;

§ 60–2.13(e)—establishment of goals and objectives by organizational units and job groups, including timetables for completion;

§ 60–2.13(i)—active support of local and national community action programs and community service programs; and

§ 60–2.13(j)—consideration of minorities and women not currently in the workforce having requisite skills.

Effective affirmative action is not a rote, or follow-the-numbers, exercise. As was suggested during the consultation process, overly prescriptive requirements sometimes lead to contractors simply going through the motions, and not really working to achieve affirmative action. Instead, effective affirmative action is intensely situation specific. The contractor must assess its individual circumstances—for example, the types of equal employment opportunity problems in evidence, how the problems developed, previous efforts to address the problems, and the types of resources available to the contractor—and devise mechanisms and programs to address those particular circumstances.

In addition, OFCCP is proposing the deletion of § 60–2.13(h)—compliance of personnel policies and practices with the Sex Discrimination Guidelines (41 CFR Part 60–20). The Sex Discrimination Guidelines are an independent regulatory requirement to which contractors are subject, regardless of whether the Guidelines are mentioned as ''additional required elements.'' Eliminating redundancy by not referencing the Guidelines in proposed § 60–2.17, therefore, would in no way affect the contractor's obligation to comply with the Guidelines nor OFCCP's commitment to enforcing the Guidelines.

The proposed rule would retain four of the original 10 ''additional required ingredients.'' OFCCP intends that these remaining items capture the essence of effective affirmative action, including subsuming many aspects of the specific ''ingredients'' proposed to be deleted. They should energize and encourage contractors to improve upon and eliminate any weaknesses in their equal employment opportunity performance. The following elements in the current § 60–2.13 would be retained:

§ 60–2.13(c)—establishment of responsibilities for implementation of the contractor's AAP (to be codified as § 60–2.17(a));

§ 60–2.13(d)—identification of problems areas by organizational units and job groups (to be codified as § 60–2.17(b));

§ 60–2.13(f)—development and execution of action-oriented programs designed to eliminate problems and further designed to attain established goals and objectives (to be codified as § 60–2.17(c)); and

§ 60–2.13(g)—design and implementation of internal audit and reporting systems to measure effectiveness of the total program (to be codified as § 60–2.17(d)).

The ''required ingredients'' that would be retained in the proposed rule have been rewritten to enhance clarity. OFCCP is soliciting comments concerning the proposed deletion and retention of the additional required elements of the AAP. In addition, OFCCP proposes to modify the provision in § 60–2.13(c) of the current regulations (proposed § 60–2.17(a)) concerning the ''establishment of responsibilities for implementation of the contractor's affirmative action program.'' This proposed modification is derived from § 60–2.22(a) of the current regulations, which recommends, but does not require, that the contractor assign an executive as director or manager of company equal opportunity programs and give that person the management support and staffing to carry out the assignment. The revised provision would expressly require that the contractor provide for the implementation of the affirmative action program by assigning responsibility and accountability to a company official. However, the official is not required to be an executive of the company.

OFCCP believes that responsibility and accountability are essential to an effective affirmative action program. Affirmative action programs are not self-executing; an official in the contractor's organization must be responsible for the development of the affirmative action program. Moreover, the official must be held responsible for the program's implementation and accountable for results. Accordingly, OFCCP proposes to make this provision mandatory.

Section 60–2.18 Equal Opportunity Survey

Proposed § 60–2.18 would require that nonconstruction contractor establishments designated by OFCCP prepare and file an Equal Opportunity Survey. The Equal Opportunity Survey contains information about personnel activities and compensation concerning minorities and women, and the contractor's affirmative action programs. Contractors are already required to maintain information necessary for completing the Survey, although not in the precise format called for by the Survey instrument.

This proposal codifies the Equal Opportunity Survey which has been under development since March 1999, with the assistance of other DOL agencies. During the initial development stage there were also discussions with OMB, and meetings with contractors and contractor representatives, civil rights groups, and women's groups. The Survey was also field tested beginning in August 1999.

The data reported in the Survey will enable OFCCP to more effectively and efficiently select contractor establishments that may have possible problems for compliance evaluations, thus enhancing the agency's ability to focus its enforcement resources on those establishments most likely to be out of compliance. In addition, the Survey will streamline the compliance evaluation process by enabling OFCCP to obtain compliance information earlier in the process. This should also alleviate any potential undue burden on contractors under review by allowing more focused compliance evaluations. Finally, the Survey requirement is expected to heighten contractor awareness of each establishment's equal employment opportunity performance, which should encourage contractors to conduct self-audits of their performance and to make any necessary corrections and improvements in their equal employment opportunity programs. OFCCP expects that the heightened awareness of performance, along with increased monitoring presence, will improve the level of compliance.

The proposal establishes as a base standard that OFCCP will require a substantial portion of all nonconstruction contractor establishments to submit the Survey each year. At this time, OFCCP contemplates sending the Survey to no less than 50% of all nonconstruction contractor establishments each year, which is the minimum number we consider necessary in order for the Survey to be a credible evaluation method. Although other models may be used, the most likely initial scenario is that OFCCP will require most contractor establishments to submit the Survey biennially, with approximately one half of all establishments submitting the Survey each year. This approach would enable OFCCP to obtain at least minimal information about the entire contractor universe every two years. Although the large majority of establishments will be required to submit the Survey only once every two years, OFCCP might also require additional Survey responses in special situations, including, but are not limited to: (1) annual follow-up on establishments that are not selected for compliance evaluation but whose survey responses indicate potential equal employment problems; and (2) one-time monitoring of all establishments in a particular industry that is suspected of having industry-wide equal employment problems. We do not contemplate requiring any establishment to submit the Survey more than once in a year. OFCCP is considering whether to include in the final rule codification of the ''50% of nonconstruction establishments'' floor mentioned in this Preamble.

Proposed paragraph (b) provides that the Survey must be prepared in accordance with the format specified by the Deputy Assistant Secretary. The paragraph further stipulates that the Survey will include information that will allow for an accurate assessment of contractor personnel activities, pay practices, and affirmative action performance. This may include data elements such as applicants, hires, promotions, terminations, and compensation by race and gender.

Proposed paragraph (c) describes how, when, and where contractors must file the Equal Opportunity Survey. Contractors are encouraged to file the

Survey in electronic format. Submission in electronic format should result in savings for many contractors. It also will greatly expedite OFCCP's receipt and analysis of submitted data. Contractors also may mail or fax the Survey to OFCCP.

A recurring concern of contractors is that information submitted to OFCCP may be disclosed to competitors or the public under the Freedom of Information Act (FOIA). Proposed paragraph (d) states that OFCCP will treat information contained in the Equal Opportunity Survey as confidential to the maximum extent the information is exempt from public disclosure under FOIA. OFCCP explains in proposed paragraph (d) that its practice is not to release data where the contractor still is in business and where the contractor asserts, and through the Department of Labor review process it is determined, that the data are confidential and that disclosure would subject the contractor to commercial harm.

The Equal Opportunity Survey will require no additional recordkeeping on the part of a contractor. Current regulations already require a contractor to keep the information needed to complete the EO Survey.

Subpart C—Miscellaneous

Subpart C of the current regulations contains suggested methods for implementing the required ingredients of AAPs. For instance, current § 60–2.21 suggests steps that a contractor may take to disseminate its equal employment opportunity policy, both within the organization and externally. Section 60–2.22 suggests appropriate responsibilities for a corporate manager of equal opportunity programs. Although the provisions of Subpart C are intended to be advisory only, they frequently are confused as being mandatory. OFCCP is aware also that conflicts develop between compliance officers and contractors as to whether certain portions of Subpart C should be implemented. Some of the guidance also has been criticized as being outdated.

The proposal would remove the contents of current Subpart C from the regulations. As is discussed above with respect to proposed § 60–2.17, one goal of the proposal is to state the essence of an AAP, without binding contractors into prescriptive, one-size-fits-all solutions that may, at times, prove counterproductive to the objective of enhancing opportunity. OFCCP recognizes, however, that much of the information contained in current Subpart C is of value to many contractors. Accordingly, while the proposal would remove the provisions from the regulations, the agency intends to incorporate suggestions for implementing affirmative action programs in a technical assistance manual for contractors.

The proposal would substitute for current Subpart C, a new Subpart C containing miscellaneous items. In current Subpart D (Miscellaneous), sections 2.31 (Preemption) and 2.32 (Supersedure) would move to proposed Subpart C in a modified form. The remainder of current Subpart D would be eliminated.

Section 60–2.30 Corporate Management Compliance Evaluations

OFCCP pioneered the concept of corporate management—or ''glass ceiling''—compliance reviews almost ten years ago. This proposed new section draws upon OFCCP's experience in conducting glass ceiling reviews, addressing several issues that are unique to the corporate management environment.

Proposed paragraph (a) briefly explains the purpose of corporate management compliance evaluations—to ascertain whether individuals are encountering artificial barriers to advancement into mid-level and senior corporate management positions. The term ''compliance evaluation'' is used in the proposed regulation to clarify that the agency may use any of the methods authorized under § 60–1.20, *i.e.*, compliance review, off-site review of records, compliance check and focused review, to investigate the employment practices at a corporate headquarters facility.

Proposed paragraph (b) provides that OFCCP may expand the scope of a corporate management compliance evaluation beyond a company's headquarters establishment, if, during the course of a compliance evaluation, it comes to OFCCP's attention that compliance problems exist at other locations. This provision codifies longstanding OFCCP policy and practice concerning the appropriate scope of corporate management evaluations. The basic policy is stated in OFCCP's compliance manual, which provides that corporate management reviews may include analysis of positions at lower-level establishments, *i.e.*, ''feeder pools'' from which selections for management positions at the headquarters establishment may be made. *See* Federal Contract Compliance Manual, Section 5A04.

The regulation currently at § 60–2.30 (Use of goals) would be eliminated with its substance included in proposed § 60–2.16 Placement goals.

In addition, OFCCP is considering including in the regulatory text a number of approaches we have found to be particularly effective in addressing glass ceiling problems. These approaches are drawn from OFCCP's report, ''The Glass Ceiling Initiative: Are There Cracks in the Ceiling?'' (June 1997). The approaches are the following:

(1) commitment of top management to equal employment opportunity and affirmative action principles;

(2) development of a system to identify high potential minority and female employees and track their progress;

(3) management development programs, including early identification of senior management potential, developmental assignments, and special training opportunities;

(4) succession planning, designed to identify and develop employees with management or executive potential so that individuals are trained and prepared to assume greater responsibility as opportunities arise;

(5) mentoring programs;

(6) active recruitment at colleges and universities with predominantly minority or female enrollment;

(7) monitoring equal employment opportunity performance and reporting it to the Chief Executive Officer on a regular basis to ensure maximum accountability; and

(8) making equal employment opportunity performance an evaluation factor for top level managers.

OFCCP is soliciting comments concerning whether this list of approaches should be included in the regulations or in subregulatory guidance only.

Section 60–2.31 Program Summary

The regulation currently at § 60–2.14 (Program summary) would be redesignated at § 60–2.31. In addition, the regulation would be revised to make one technical change—to substitute the title ''Deputy Assistant Secretary'' for ''Director.'' Pursuant to the authority set forth in 5 U.S.C. 552(b)(3)(a), which allows Federal agencies to alter ''rules of agency organization, procedure, or practice'' without notice and comment, OFCCP is not accepting comments on this regulation. OFCCP intends to replace the program summary requirements at some point in the future should it be found to be duplicative of the Equal Opportunity Survey.

Section 60–2.32 Affirmative Action Records

The proposed regulation would add a provision specifying that the contractor

must make relevant records, including records maintained pursuant to §§ 60–1.12 and 2.10, available to OFCCP on request. This provision is derived from the last sentence of § 60–1.40(c) of the current regulations. It is designed to ensure that OFCCP will have access to the records it needs to ascertain a contractor's compliance with its obligations under part 60–2.

Section 60–2.33 Preemption

OFCCP intends to move this provision from § 60–2.31 in the current regulations to § 60–2.33 without alteration, except for several technical wording changes. Pursuant to the authority set forth in 5 U.S.C. 552(b)(3)(A), which allows Federal agencies to alter ''rules of agency organization, procedure, or practice'' without notice and comment, OFCCP is not accepting comments on this regulation.

Section 60–2.34 Supersedure

This provision would be moved from § 60–2.32 in the current regulations to § 60–2.34. OFCCP proposes to retain the first sentence of this section essentially as it appears in the current regulations. The second sentence, which references an old version of ''Order No. 4'' (a precursor to the part 60–2 regulations), and the third sentence, which states that nothing in part 60–2 is intended to amend parts 60–3 and 60–20, are omitted as outdated and unnecessary at this time.

Section 60–2.35 Compliance Status

This section would expand upon and restructure a provision that appears at § 60–2.15 of the current regulations. The new section would begin, as does the current rule, with the assurance that no contractor's compliance status will be judged alone by whether the contractor reaches its goals.

Consistent with the proposal contained in § 60–2.16 above, we would remove from this section the existing reference to ''timetables.'' We propose to further reinforce this point by adding a new sentence that restates OFCCP's longstanding position that the composition of the contractor's workforce does not, by itself, serve as the basis for imposing sanctions.

The remainder of the section would address, in turn, compliance with affirmative action and nondiscrimination obligations. A sentence on affirmative action obligations would be similar to the second sentence of the current regulation, stating that a contractor's compliance status will be determined by the entirety of its affirmative action activities and good faith efforts. A sentence on compliance with nondiscrimination obligations would recite that a contractor's compliance status will be determined by analysis of statistical data and other non-statistical information that would indicate whether employees and applicants are being treated without regard to their race, color, religion, sex, or national origin. Examples of nonstatistical information are collective bargaining agreements, company policy statements, and training notices.

Regulatory Procedures

Executive Order 12866

The Department is issuing this proposed rule in conformance with Executive Order 12866. This proposal has been determined to be significant for purposes of Executive Order 12866 and therefore has been reviewed by the Office of Management and Budget. This proposal meets the criteria of Section 3(f)(1) of Executive Order 12866 and therefore the information enumerated in Section 6(a)(3)(C) of that Order is contained in the Paperwork Reduction Act Section below. The proposed changes to the regulations in this NPRM will decrease the total estimated annualized cost to contractors of developing, updating, and maintaining an AAP by $147,950,698. The estimated average cost savings per establishment of developing, updating, and maintaining an AAP is $1378. See Paperwork Reduction Act section below.

Executive Order 13132

OFCCP has reviewed this rule in accordance with Executive Order 13132 regarding federalism, and has determined that it does not have ''federalism implications.'' The rule does not ''have substantial direct effects on the States, on the relationship between the national government and the States, or on the distribution of power and responsibilities among the various levels of government.''

Regulatory Flexibility Act

The proposed rule, if promulgated, would not have a significant economic impact on a substantial number of small business entities.

The proposals to eliminate the workforce analysis requirement and instead require an organizational profile, to allow smaller contractors to use EEO–1 categories for their job groups, to reduce the number of factors that must be considered to determine the availability of women and minorities from eight to two, and to eliminate more than half of the additional required ingredients of the documentation of the AAP will reduce costs associated with these provisions for all covered contractors. The proposal to require an Equal Opportunity Survey will increase costs, but the overall result of the proposed rule should be a reduction in the recordkeeping and reporting burden.

Thus, the Department concludes that the proposed rule will not have a significant economic impact on a substantial number of small entities. The Secretary has certified to the Chief Counsel for Advocacy of the Small Business Administration to this effect. Therefore, a regulatory flexibility analysis under the Regulatory Flexibility Act is not required.

Unfunded Mandates Reform Act

For purposes of the Unfunded Mandates Reform Act of 1995, as well as Executive Order 12875, the proposed rule, if promulgated, will not include any Federal mandate that may result in increased expenditures by state, local, and tribal governments, or increased expenditures by the private sector, of $100,000,000 or more in any one year.

Paperwork Reduction Act

This proposed rule contains information collections which are subject to review by the Office of Management and Budget (OMB) under the Paperwork Reduction Act of 1995. The proposed rule would revise regulations which contain information collection requirements which are currently approved under OMB No. 1215–0072. The proposal includes a new requirement, the Equal Opportunity Survey, which was reviewed and approved by OMB under OMB No. 1215–0196. The title and description of the information collections are shown below with an estimate of the effect the revised requirements would have on the recordkeeping hours contained in the approved 1215–0072 on file at OMB.

The six information collections discussed below relate to Federal nonconstruction contractor and subcontractor responsibilities under Executive Order 11246, as amended, and its implementing regulations at 41 CFR parts 60–1 and 60–2. Five of these collections are revisions of current methods and procedures used in developing and implementing an AAP. The sixth collection relates to the proposed annual Equal Opportunity Survey. The AAP is updated annually by the contractor.

OFCCP invites the public to comment on whether each of the proposed

collections of information: (1) Ensures that the collection of information is necessary to the proper performance of the agency, including whether the information will have practical utility; (2) estimates the projected burden, including the validity of the methodology and assumptions used, accurately; (3) enhances the quality, utility, and clarity of the information to be collected; and (4) minimizes the burden of the collection of information on those who are to respond, including through the use of appropriate automated, electronic, mechanical, or other technological collection techniques or other forms of information technology (*e.g.*, permitting electronic submission of responses).

Title: 41 CFR 60–1.12 Record Retention

Description: The proposed rule would amend the record retention provisions in § 60–1.12(c) to add a requirement that contractors be able to identify the gender, race, and ethnicity of employees and applicants in any record the contractors maintain pursuant to this section, and submit this information to OFCCP on request. This proposal, it is estimated, would increase the burden of developing, maintaining, and updating an AAP by 5 percent.

Title: 41 CFR 60–2.11 Organizational Profile

Description: This proposed rule would replace the current portion of 41 CFR 60–2.11(a) which describes the method to be used in developing a workforce analysis. The current rule requires a listing of job titles (not job groups) ranked from the lowest paid to highest paid within each department or similar organizational unit and the race and sex of incumbents. The proposal would not require listings of job titles, with the exception of supervisors; instead, the contractor would include in its AAP an organizational profile which shows each of the work units and their relationships to one another, and the gender, race, and ethnic composition of each work unit. In most cases, a contractor should be able to use its existing organizational chart as the core for its organizational profile. This proposal, it is estimated, would reduce the burden of developing, maintaining, and updating an AAP by 20 percent.

Title: 41 CFR 60–2.12 Job Group Analysis

Description: For larger contractors, the proposed rule would continue the current practice of grouping jobs by similarity of content, wage rates, and opportunities. Thus, for contractors with 150 or more employees there would be no change from the current regulation. For contractors with fewer than 150 employees, the proposal permits the use of the nine occupational groups used in the EEO–1 report rather than requiring such contractors to develop specific job groups. Many of these contractors are already grouping their employees this way for the annual EEO–1 report and the proposal would relieve them of any additional grouping analysis. This proposal, it is estimated, would decrease the burden of developing, maintaining, and updating an AAP by 10 percent for smaller contractors.

Title: 41 CFR 60–2.14 Determining Availability

Description: This proposed rule would replace the current portion of 41 CFR 60–2.11(b) which describes the method of determining the availability of minorities or women for each job group. The present method requires the contractor to assess each of eight factors, separately for minorities and women, to determine the availability for each job group. The proposal would reduce the number of factors to two. This proposal, it is estimated, would reduce the burden of developing, maintaining, and updating an AAP by 10 percent.

Title: 41 CFR 60–2.17 Additional Required Elements of Affirmative Action Programs

Description: The proposed rule would replace the current 41 CFR 60–2.13 which lists 10 required additional ingredients of affirmative action programs. The proposed rule would retain four of the items, some rewritten to enhance clarity, and one of which is modified slightly. OFCCP believes that these changes would reduce the burden of developing, maintaining, and updating an AAP by an estimated 20 percent.

Title: 41 CFR 60–2.18 Equal Opportunity Survey

Description: This proposal would require contractors to submit Affirmative Action Program, Personnel Activity, and Compensation Data information to OFCCP. The information required for the Equal Opportunity Survey would be drawn from the records required to be retained by 41 CFR part 60. The Equal Opportunity Survey would not impose any new recordkeeping requirements. The Equal Opportunity Survey was reviewed and approved by OMB under OMB No. 1215–0196. The format would be available from OFCCP in electronic form. The Equal Opportunity Survey would provide contractors with an economical means of assessing their affirmative action efforts and provide OFCCP with an improved basis for compliance evaluations. This proposal, it is estimated, would increase burden by 12 hours per respondent or 720,000 hours for the current estimate of 60,000 respondents (see **Federal Register** Notices 64 FR 54056 (October 5, 1999) and 65 FR 5689 (February 4, 2000)).

Description of respondents: Nonconstruction Contractors and Subcontractors Subject to the Requirements of 41 CFR 60–1.40

These estimates are an approximation of the average time expected to be necessary to accomplish the desired results. The personnel information being recorded and included in the AAP is currently available during the normal course of business. Estimated operating and maintenance costs are included below.

OFCCP seeks comments on these estimates.

The contractors subject to these proposed regulations are currently covered by the approved information collection request on file with OMB under No. 1215–0072. That document represents information collection requirements for 89,807 establishments which, on average, expend approximately 150 hours each on developing, maintaining, and updating the AAP.

At this time, OFCCP records indicate that the number of establishments has increased from approximately 89,807 to 107,414. Application of the estimated changes in burden hours discussed above for §§ 60–1.12, 60–2.11, 60–2.12, 60–2.14, and 60–2.17 results in the following burden estimates as compared with the current inventory under 1215–0072.

BURDEN CHANGE SUMMARY

	Current inventory	Current inventory adjusted for # of firms	Revised estimate	Changes
AAP Development	161,155	192,750	99,624	−93,126
AAP Updating	6,658,288	7,963,670	4,391,335	−3,572,335
AAP Maintenance	6,725,543	8,044,110	4,435,692	−3,608,418
Total Recordkeeping Burden	13,544,986	16,200,530	8,926,651	−7,273,879
Average hours per respondent	@150	@150	@83	

Section 60–2.18 requires contractors to submit an Equal Opportunity Survey to OFCCP. The information required for the Survey would come from the records contractors are required to retain by 41 CFR Part 60. The Survey would not impose any new recordkeeping requirements. Although we estimate that this proposal would increase burden by 12 hours per respondent, these burden hours are not included in this NPRM. OFCCP has already included the Survey burden hours in a previous submission to OMB. See Federal Register Notices 64 FR 54056 (October 5, 1999) and 65 FR 5689 (February 4, 2000).

The estimated annualized cost to respondents is based on Bureau of Labor Statistics data in the publication ''Employer Costs for Employee Compensation'' (USDL: 99–173), which lists total compensation for executive, administrative, and managerial as $35.18 per hour and administrative support as $16.63 per hour. OFCCP estimates that 20 percent of the burden hours will be executive, administrative, and managerial and 80 percent will be administrative support. We have calculated the total estimated annualized cost as follows:

Executive 7,273,879 × .20 × $35.18 = $51,179,012

Admin. Supp. 7,273,879 × .80 × $16.63 = $96,771,686

Total annualized cost savings estimate = $147,950,698

Estimated average cost savings per establishment is: $147,950,698/107,414 = $1,378

OFCCP estimates that contractors will have some operations and maintenance cost associated with this collection. For Supply & Service compliance evaluations, contractors copy their AAPs and mail the AAPs to OFCCP. We estimate an average copying cost of 8 cents per page. Under the proposed regulations, the size of an AAP will decrease, on average, by 85.5%, from 150 pages to 22 pages. This decrease is associated with a reduction in burden hours. The estimated total copying cost to contractors will be: 22 pages × $.08 × 2762 = $4861. In addition, we estimate an average mailing cost of $5.00 per contractor. The total mailing cost for contractors will be $5 × 2762 = $13,810.

A copy of this proposed rule has been submitted to OMB for its review and approval of these information collections. Interested persons are requested to send comments regarding this information collection, including suggestions for reducing this burden, to the Office of Information and Regulatory Affairs, OMB, New Executive Office Building, 725 17th Street NW, Room 10235, Washington, DC 20503, Attention: Desk Officer for DOL/ESA.

List of Subjects in 41 CFR Parts 60–1 and 60–2

Civil rights, Discrimination in employment, Employment, Equal employment opportunity, Government contracts, and Labor.

Signed at Washington, DC, this 28th day of April 2000.

Alexis M. Herman,

Secretary of Labor.

Bernard E. Anderson,

Assistant Secretary for Employment Standards.

Shirley J. Wilcher,

Deputy Assistant Secretary for Federal Contract Compliance.

Accordingly, part 60–2 of the rule amending 41 CFR Chapter 60 published on December 30, 1980 (45 FR 86216), which was delayed indefinitely on August 25, 1981 (46 FR 42865), is proposed to be withdrawn; the proposed rule published on August 25, 1981 (46 FR 42968; supplemented at 47 FR 17770, April 23, 1982) is withdrawn in its entirety; and parts 60–1 and 60–2 of Title 41 of the Code of Federal Regulations are proposed to be amended as follows.

PART 60–1—OBLIGATIONS OF CONTRACTORS AND SUBCONTRACTORS

1. The authority citation for part 60–1 continues to read as follows:

Authority: Sec. 201, E.O. 11246 (30 FR 12319), as amended by E.O. 11375 (32 FR 14303) and E.O. 12086 (43 FR 46501).

1a. In § 60–1.12, paragraph (b) is revised to read as follows:

§ 60–1.12 Record retention.

* * * * *

(b) *Affirmative action programs.* A contractor establishment required under § 60–1.40 to develop and maintain an affirmative action program (AAP) must maintain its current AAP and documentation of good faith effort, and must preserve its AAP and documentation of good faith effort for the immediately preceding AAP year, unless it was not then covered by the AAP requirement.

* * * * *

2. In § 60–1.12, paragraphs (c) and (d) are redesignated as paragraphs (d) and (e), respectively, and the first sentence of newly redesignated paragraph (d) is revised to read as follows:

§ 60–1.12 Record retention.

* * * * *

(d) *Failure to preserve records.* Failure to preserve complete and accurate records as required by paragraphs (a) through (c) of this section constitutes noncompliance with the contractor's obligations under the Executive Order and this part.* * *

* * * * *

3. In § 60–1.12, a new paragraph (c) is added to read as follows:

§ 60–1.12 Record retention.

* * * * *

(c)(1) In any record the contractor maintains pursuant to this section, the contractor must be able to identify:

(i) The gender, race, and ethnicity of each employee; and

(ii) Where possible, the gender, race, and ethnicity of each applicant.

(2) The contractor must supply this information to the Office of Federal Contract Compliance Programs upon request.

* * * * *

4. Section 60–1.40 is revised to read as follows:

§ 60–1.40 Affirmative action programs.

(a) Each nonconstruction contractor that has 50 or more employees and has a contract of $50,000 or more; or has Government bills of lading which in any 12-month period, total or can reasonably be expected to total $50,000 or more; or serves as a depository of Government funds in any amount; or is a financial institution which is an issuing and paying agent for U.S. savings bonds and savings notes in any amount, must develop and maintain an affirmative action program for each of its establishments.

Each contractor and subcontractor must require each nonconstruction subcontractor that has 50 or more employees and has a subcontract of $50,000 or more; or has Government bills of lading which in any 12-month period, total or can reasonably be expected to total $50,000 or more; or serves as a depository of Government funds in any amount; or is a financial institution which is an issuing and paying agent for U.S. savings bonds and savings notes in any amount, to develop and maintain an affirmative action program for each of its establishments.

(b) Nonconstruction contractors should refer to part 60–2 of this chapter for specific affirmative action requirements. Construction contractors should refer to part 60–4 of this chapter for specific affirmative action requirements.

5. Part 60–2 is revised to read as follows:

PART 60–2—AFFIRMATIVE ACTION PROGRAMS

Subpart A—General

Sec.

60–2.1 Scope and application.
60–2.2 Agency action.

Subpart B—Purpose and Contents of Affirmative Action Programs

60–2.10 General purpose and contents of affirmative action programs.
60–2.11 Organizational profile.
60–2.12 Job group analysis.
60–2.13 Placement of incumbents in job groups.
60–2.14 Determining availability.
60–2.15 Comparing incumbency to availability.
60–2.16 Placement goals.
60–2.17 Additional required elements of affirmative action programs.
60–2.18 Equal Opportunity Survey.

Subpart C—Miscellaneous

60–2.30 Corporate management compliance evaluations.
60–2.31 Program summary.
60–2.32 Affirmative action records.
60–2.33 Preemption.
60–2.34 Supersedure.
60–2.35 Compliance status.

Authority: E.O. 11246, 30 FR 12319, and E.O. 11375, 32 FR 14303, as amended by E.O. 12086, 43 FR 46501.

Subpart A—General

§ 60–2.1 Scope and application.

(a) *General.* The requirements of this part apply to nonconstruction contractors. The regulations prescribe the contents of affirmative action programs, standards and procedures for evaluating the compliance of affirmative action programs implemented pursuant to this part, and related matters.

(b) *Who must develop affirmative action programs.* Each nonconstruction contractor that has 50 or more employees and has a contract of $50,000 or more; or has Government bills of lading which in any 12-month period, total or can reasonably be expected to total $50,000 or more; or serves as a depository of Government funds in any amount; or is a financial institution which is an issuing and paying agent for U.S. savings bonds and savings notes in any amount, must develop and maintain an affirmative action program for each of its establishments.

Each contractor and subcontractor must require each nonconstruction subcontractor that has 50 or more employees and has a subcontract of $50,000 or more; or has Government bills of lading which in any 12-month period, total or can reasonably be expected to total $50,000 or more; or serves as a depository of Government funds in any amount; or is a financial institution which is an issuing and paying agent for U.S. savings bonds and savings notes in any amount, to develop and maintain an affirmative action program for each of its establishments.

(c) *When affirmative action programs must be developed.* The affirmative action programs required under paragraph (b) of this section must be developed within 120 days from the commencement of a contract and must be updated annually.

(d) *Who is included in affirmative action programs.* Contractors subject to the affirmative action program requirements must develop and maintain an affirmative action program for each of their establishments. Each employee in the contractor's workforce must be included in an affirmative action program. Each employee must be included in the affirmative action program of the establishment at which he or she works, except that:

(1) Employees who perform their normal and customary duties at locations other than that of the manager to whom they report, must be included in the affirmative action program of their manager.

(2) Employees who work at an establishment where the contractor employs fewer than 50 employees, may be included under any of the following three options: in an affirmative action program which covers just that establishment; in the affirmative action program which covers the location of the personnel function which supports the establishment; or, in the affirmative action program which covers the location of the official to whom they report.

(3) Employees for whom selection decisions are made at a higher level establishment within the organization must be included in the affirmative action program of the establishment where the selection decision is made.

(e) *How to identify employees included in affirmative action programs other than where they are located.* If pursuant to paragraph (d) of this section employees are included in an affirmative action program for a location other than the one in which the employees are located, the organizational profile and job group analysis of the affirmative action program in which the employees are included must be annotated to identify the actual location of such employees. If the establishment at which the employees actually are located maintains an affirmative action program, the organizational profile and job group analysis of that program must be annotated to identify the program in which the employees are included.

§ 60–2.2 Agency action.

(a) Any contractor required by § 60–2.1 of this chapter to develop and maintain an affirmative action program for each of its establishments that has not complied with that section is not in full compliance with Executive Order 11246, as amended. When a contractor is required to submit its affirmative action program to OFCCP (e.g., for a compliance evaluation), the affirmative action program will be deemed to have been accepted by the Government at the time OFCCP notifies the contractor of completion of the compliance evaluation or other action, unless within 45 days thereafter the Deputy Assistant Secretary has disapproved such program.

(b) If, in determining such contractor's responsibility for an award of a contract it comes to the contracting officer's attention, through sources within his/her agency or through the OFCCP or other Government agencies, that the contractor does not have an affirmative action program at each of its establishments, or has substantially deviated from such an approved

affirmative action program, or has failed to develop or implement an affirmative action program which complies with the regulations in this chapter, the contracting officer must declare the contractor/bidder nonresponsible and so notify the contractor and the Deputy Assistant Secretary, unless the contracting officer otherwise affirmatively determines that the contractor is able to comply with the equal employment obligations.

Any contractor/bidder which has been declared nonresponsible in accordance with the provisions of this section may request the Deputy Assistant Secretary to determine that the responsibility of the contractor/bidder raises substantial issues of law or fact to the extent that a hearing is required. Such request must set forth the basis upon which the contractor/bidder seeks such a determination.

If the Deputy Assistant Secretary, in his/her sole discretion, determines that substantial issues of law or fact exist, an administrative or judicial proceeding may be commenced in accordance with the regulations contained in § 60–1.26; or the Deputy Assistant Secretary may require the investigation or compliance evaluation be developed further or additional conciliation be conducted: Provided, That during any pre-award conferences, every effort will be made through the processes of conciliation, mediation, and persuasion to develop an acceptable affirmative action program meeting the standards and guidelines set forth in this part so that, in the performance of the contract, the contractor is able to meet its equal employment obligations in accordance with the equal opportunity clause and applicable rules, regulations, and orders: Provided further, That a contractor/bidder may not be declared nonresponsible more than twice due to past noncompliance with the equal opportunity clause at a particular establishment or facility without receiving prior notice and an opportunity for a hearing.

Subpart B—Purpose and Contents of Affirmative Action Programs

§ 60–2.10 General purpose and contents of affirmative action programs.

(a) *Purpose.* (1) An affirmative action program is a management tool designed to ensure equal employment opportunity. A central premise underlying affirmative action is that, absent discrimination, over time a contractor's workforce, generally, will reflect the gender, racial and ethnic profile of the labor pools from which the contractor recruits and selects. Affirmative action programs contain a diagnostic component which includes a number of quantitative analyses designed to evaluate the composition of the workforce of the contractor and compare it to the composition of the relevant labor pools.

Affirmative action programs also include action-oriented programs. If women and minorities are not being employed at a rate to be expected given their availability in the relevant labor pool, the contractor's affirmative action program includes specific practical steps designed to address this underutilization. Effective affirmative action programs also include internal auditing and reporting systems as a means of measuring the contractor's progress toward achieving the workforce that would be expected in the absence of discrimination.

(2) An affirmative action program also ensures equal employment opportunity by institutionalizing the contractor's commitment to equality in every aspect of the employment process. Therefore, as part of its affirmative action program, a contractor monitors and examines its employment decisions and compensation systems to evaluate the impact of those systems on women and minorities.

(3) An affirmative action program is, thus, more than a paperwork exercise. An affirmative action program includes those policies, practices, and procedures that the contractor implements to ensure that all qualified applicants and employees are receiving an equal opportunity for recruitment, selection, advancement, and every other term and privilege associated with employment. Affirmative action, ideally, is a part of the way the contractor regularly conducts its business. OFCCP has found that when an affirmative action program is approached from this perspective, as a powerful management tool, there is a positive correlation between the presence of affirmative action and the absence of discrimination.

(b) *Contents of affirmative action programs.* (1) An affirmative action program must include the following quantitative analyses:

(i) Organizational profile § 60–2.11;

(ii) Job group analysis § 60–2.12;

(iii) Placement of incumbents in job groups § 60–2.13;

(iv) Determining availability § 60–2.14;

(v) Comparing incumbency to availability § 60–2.15; and

(vi) Placement goals § 60–2.16.

(2) In addition, an affirmative action program must include the following components specified in the § 60–2.17 of this part:

(i) Designation of responsibility for implementation;

(ii) Identification of problem areas;

(iii) Action-oriented programs; and

(iv) Periodic internal audits.

(c) *Documentation.* Contractors must maintain and make available to OFCCP documentation of their compliance with §§ 60–2.11 through 60–2.17.

§ 60–2.11 Organizational profile.

(a) *Purpose.* An organizational profile is a snapshot of the staffing pattern within an establishment. It is one method contractors use to determine whether barriers to equal employment opportunity exist in their organizations. The profile provides an overview of the workforce at the establishment that may assist in identifying organizational units where women or minorities are underrepresented or concentrated.

(b)(1) An organizational profile is a detailed organizational chart or similar graphical presentation of the contractor's organizational structure. The profile must identify each organizational unit in the establishment, and show the relationship of each organizational unit to the other organizational units in the establishment.

(2) An organizational unit is any component that is part of the contractor's corporate structure. In a more traditional organization, an organizational unit might be a department, division, section, branch, group or similar component. In a less traditional organization, an organizational unit might be a project team, job family, or similar component. The term includes an umbrella unit (such as a department) that contains a number of subordinate units, and it separately includes each of the subordinate units (such as sections or branches).

(c) For each organizational unit, the organizational profile must indicate the following:

(1) The name of the unit;

(2) The job title, gender, race, and ethnicity of the unit supervisor (if the unit has a supervisor);

(3) The total number of male and female incumbents; and

(4) The total number of male and female incumbents in each of the following groups: Blacks, Hispanics, Asians/Pacific Islanders, and American Indians/Alaskan Natives.

§ 60–2.12 Job group analysis.

(a) *Purpose.* A job group analysis is a method of combining job titles within the contractor's establishment. This is the first step in the contractor's comparison of the representation of

minorities and women in its workforce with the estimated availability of minorities and women qualified to be employed.

(b) In the job group analysis, jobs at the establishment with similar content, wage rates, and opportunities, must be combined to form job groups. Similarity of content refers to the duties and responsibilities of the job titles which make up the job group. Similarity of opportunities refers to training, transfers, promotions, pay mobility, and other career enhancement opportunities offered by the jobs within the job group.

(c) The job group analysis must include a list of the job titles that comprise each job group. If, pursuant to §§ 60–2.1(d) and (e) the job group analysis contains jobs that are located at another establishment, the job group analysis must be annotated to identify the actual location of those jobs. If the establishment at which the jobs actually are located maintains an affirmative action program, the job group analysis of that program must be annotated to identify the program in which the jobs are included.

(d) Except as provided in § 60–2.1(d), all jobs located at an establishment must be reported in the job group analysis of that establishment.

(e) *Smaller employers.* If a contractor has a total workforce of fewer than 150 employees, the contractor may prepare a job group analysis that utilizes EEO–1 categories as job groups. EEO–1 categories refers to the nine occupational groups used in the Standard Form 100, the Employer Information EEO–1 Survey: officials and managers, professionals, technicians, sales, office and clerical, craft workers (skilled), operatives (semiskilled), laborers (unskilled), and service workers.

§ 60–2.13 Placement of incumbents in job groups.

The contractor must separately state the percentage of minorities and the percentage of women it employs in each job group established pursuant to § 60–2.12.

§ 60–2.14 Determining availability.

(a) *Purpose.* Availability is an estimate of the number of qualified minorities or women available for employment in a given job group, expressed as a percentage of all qualified persons available for employment in the job group. The purpose of the availability determination is to establish a benchmark against which the demographic composition of the contractor's incumbent workforce can be compared in order to determine whether barriers to equal employment opportunity may exist within particular job groups.

(b) The contractor must separately determine the availability of minorities and women for each job group.

(c) In determining availability, the contractor must consider at least the following factors:

(1) The percentage of minorities or women with requisite skills in the reasonable recruitment area. The reasonable recruitment area is defined as the geographical area from which the contractor usually seeks or reasonably could seek workers to fill the positions in question.

(2) The percentage of minorities or women among those promotable, transferable, and trainable within the contractor's organization. Trainable refers to those employees within the contractor's organization who could, with appropriate training provided by the contractor, become promotable or transferable during the AAP year.

(d) The contractor must use the most current and discrete statistical information available to derive availability figures. Examples of such information include census data, data from local job service offices, and data from colleges or other training institutions.

(e) The contractor may not draw its reasonable recruitment area in such a way as to have the effect of excluding minorities or women. For each job group, the reasonable recruitment area must be identified, with a brief explanation of the rationale for selection of that recruitment area.

(f) The contractor may not define the pool of promotable, transferable, and trainable employees in such a way as to have the effect of excluding minorities or women. For each job group, the pool of promotable, transferable, and trainable employees must be identified with a brief explanation of the rationale for the selection of that pool.

(g) Where a job group is composed of job titles with different availability rates, a composite availability figure for the job group must be calculated. The contractor must separately determine the availability for each job title within the job group and must determine the proportion of job group incumbents employed in each job title. The contractor must weight the availability for each job title by the proportion of job group incumbents employed in that job group. The sum of the weighted availability estimates for all job titles in the job group must be the composite availability for the job group.

§ 60–2.15 Comparing incumbency to availability.

(a) The contractor must compare the percentage of minorities and women in each job group determined pursuant to § 60–2.13 with the availability for those job groups determined pursuant to § 60–2.14.

(b) When the percentage of minorities or women employed in a particular job group is less than would reasonably be expected given their availability percentage in that particular job group, the contractor must establish a placement goal in accordance with § 60–2.16.

§ 60–2.16 Placement goals.

(a) *Purpose.* Placement goals serve as objectives or targets reasonably attainable by means of applying every good faith effort to make all aspects of the entire affirmative action program work. Placement goals also are used to measure progress toward achieving equal employment opportunity.

(b) Placement goals must be designed to correct any identifiable deficiencies. A contractor's determination under § 60–2.15 that a placement goal is required constitutes neither a finding nor an admission of discrimination.

(c) Where, pursuant to § 60–2.15, a contractor is required to establish a placement goal for a particular job group, the contractor must establish a percentage annual placement goal at least equal to the availability figure derived for women or minorities, as appropriate, for that job group.

(d) The placement goal-setting process described above contemplates that contractors will, where required, establish a single goal for all minorities. In the event of a substantial disparity in the utilization of a particular minority group or in the utilization of men or women of a particular minority group, a contractor may be required to establish separate goals for those groups.

(e) In establishing placement goals, the following principles also apply:

(1) Placement goals may not be rigid and inflexible quotas, which must be met, nor are they to be considered as either a ceiling or a floor for the employment of particular groups. Quotas are expressly forbidden.

(2) In all employment decisions, the contractor must make selections in a nondiscriminatory manner. Placement goals do not provide the contractor with a justification to extend a preference to any individual, select an individual, or adversely affect an individual's employment status, on the basis of that person's race, color, religion, sex, or national origin.

(3) Placement goals do not create set-asides for specific groups, nor are they intended to achieve proportional representation or equal results.

(4) Placement goals may not be used to supersede merit selection principles. Affirmative action programs prescribed by the regulations in this part do not require a contractor to hire a person who lacks qualifications to perform the job successfully, or hire a less qualified person in preference to a more qualified one.

(f) A contractor extending a publicly announced preference for American Indians as is authorized in 41 CFR 60–1.5(a)(6) may reflect in its placement goals the permissive employment preference for American Indians living on or near an Indian reservation.

§ 60–2.17 Additional required elements of affirmative action programs.

In addition to the elements required by § 60–2.10 through § 60–2.16, an acceptable affirmative action program must include the following:

(a) *Designation of responsibility.* The contractor must provide for the implementation of equal employment opportunity and the affirmative action program by assigning responsibility and accountability to an official of the organization. Depending upon the size of the contractor, this may be the official's sole responsibility. He or she must have the authority, resources, support of and access to top management to ensure the effective implementation of the affirmative action program.

(b) *Identification of problem areas.* The contractor must perform in-depth analyses of its total employment process to determine whether and where impediments to equal employment opportunity exist. At a minimum the contractor must evaluate:

(1) The workforce by organizational unit and job group to determine whether there are problems of minority or female utilization (*i.e.,* employment in the unit or group), or of minority or female distribution (*i.e.,* placement in the different jobs within the unit or group);

(2) Personnel activity (applicant flow, hires, terminations, promotions, and other personnel actions) to determine whether there are selection disparities;

(3) Compensation system(s) to determine whether there are gender-, race-, or ethnicity-based disparities;

(4) Selection, recruitment, referral, and other personnel procedures to determine whether they result in disparities in the employment or advancement of minorities or women; and

(5) Any other areas that might impact the success of the affirmative action program.

(c) *Action-oriented programs.* The contractor must develop and execute action-oriented programs designed to correct any problem areas identified pursuant to § 60–2.17(b) and to attain established goals and objectives. In order for these action-oriented programs to be effective, the contractor must ensure that they consist of more than following the same procedures which have previously produced inadequate results. Furthermore, a contractor must demonstrate that it has made good faith efforts to remove identified barriers, expand employment opportunities, and produce measurable results.

(d) *Internal audit and reporting system.* The contractor must develop and implement an auditing system that periodically measures the effectiveness of its total affirmative action program. The actions listed below are key to a successful affirmative action program:

(1) Monitor records of all personnel activity, including referrals, placements, transfers, promotions, terminations, and compensation, at all levels to ensure the nondiscriminatory policy is carried out;

(2) Require internal reporting on a scheduled basis as to the degree to which equal employment opportunity and organizational objectives are attained;

(3) Review report results with all levels of management; and

(4) Advise top management of program effectiveness and submit recommendations to improve unsatisfactory performance.

§ 60–2.18 Equal Opportunity Survey.

(a) *Survey requirement.* Each year, OFCCP will designate a substantial portion of all nonconstruction contractor establishments to prepare and file an Equal Opportunity Survey. OFCCP will notify those establishments required to prepare and file the Equal Opportunity Survey. The Survey will provide OFCCP compliance data early in the compliance evaluation process, thus allowing the agency to more effectively identify contractor establishments for further evaluation. The Survey will also provide contractors with a useful tool for self-evaluation.

(b) *Survey format.* The Equal Opportunity Survey must be prepared in accordance with the format specified by the Deputy Assistant Secretary. The Equal Opportunity Survey will include information that will allow for an accurate assessment of contractor personnel activities, pay practices, and affirmative action performance. This may include data elements such as applicants, hires, promotions, terminations, and compensation by race and gender.

(c) *How, when, and where to file.* Contractors are encouraged to submit the Equal Opportunity Survey in electronic format, *i.e.,* a computerized version prepared in accordance with the requirements of this section. The Equal Opportunity Survey may be submitted in electronic format or via facsimile to the address indicated in the Survey instructions. Paper versions of the Equal Opportunity Survey must be mailed to the address indicated in the Survey instructions. The filing deadline will be specified by the Deputy Assistant Secretary.

(d) *Confidentiality.* OFCCP will treat information contained in the Equal Opportunity Survey as confidential to the maximum extent the information is exempt from public disclosure under the Freedom of Information Act, 5 U.S.C. 552. It is the practice of OFCCP not to release data where the contractor is still in business, and the contractor indicates, and through the Department of Labor review process it is determined, that the data are confidential and sensitive and that the release of data would subject the contractor to commercial harm.

Subpart C—Miscellaneous

§ 60–2.30 Corporate management compliance evaluations.

(a) *Purpose.* Corporate Management Compliance Evaluations are designed to ascertain whether individuals are encountering artificial barriers to advancement into midlevel and senior corporate management, *i.e.,* glass ceiling. During Corporate Management Compliance Evaluations, special attention is given to those components of the employment process that affect advancement into mid- and senior-level positions.

(b) If, during the course of a Corporate Management Compliance Evaluation, it comes to the attention of OFCCP that problems exist at locations outside the corporate headquarters, OFCCP may expand the compliance evaluation beyond the headquarters establishment. At its discretion, OFCCP may direct its attention to and request relevant data for any and all areas within the corporation to ensure compliance with Executive Order 11246.

§ 60–2.31 Program summary.

The affirmative action program must be summarized and updated annually. The program summary must be prepared in a format which will be

prescribed by the Deputy Assistant Secretary and published in the **Federal Register** as a notice before becoming effective. Contractors and subcontractors must submit the program summary to OFCCP each year on the anniversary date of the affirmative action program.

§ 60–2.32 Affirmative action records.

The contractor must make available to the Office of Federal Contract Compliance Programs, upon request, records maintained pursuant to § 60–1.12 and written or otherwise documented portions of AAPs maintained pursuant to § 60–2.10 for such purposes as may be appropriate to the fulfillment of the agency's responsibilities under Executive Order 11246.

§ 60–2.33 Preemption.

To the extent that any state or local laws, regulations or ordinances, including those that grant special benefits to persons on account of sex, are in conflict with Executive Order 11246, as amended, or with the requirements of this part, they will be regarded as preempted under the Executive Order.

§ 60–2.34 Supersedure.

All orders, instructions, regulations, and memorandums of the Secretary of Labor, other officials of the Department of Labor and contracting agencies are hereby superseded to the extent that they are inconsistent with this part 60–2.

§ 60–2.35 Compliance status.

No contractor's compliance status will be judged alone by whether it reaches its goals. The composition of the contractor's workforce (*i.e.,* the employment of minorities or women at a percentage rate below, or above, the goal level) does not, by itself, serve as a basis to impose any of the sanctions authorized by Executive Order 11246 and the regulations in this chapter. Each contractor's compliance with its affirmative action obligations will be determined by reviewing the nature and extent of the contractor's good faith affirmative action activities as required under § 60–2.17, and the appropriateness of those activities to identified equal employment opportunity problems. Each contractor's compliance with its nondiscrimination obligations will be determined by analysis of statistical data and other non-statistical information which would indicate whether employees and applicants are being treated without regard to their race, color, religion, sex, or national origin.

[FR Doc. 00–10991 Filed 5–3–00; 8:45 am]

BILLING CODE 4510–45–P

Federal Register

Thursday,
May 4, 2000

Part V

The President

Proclamation 7301—Older Americans Month, 2000

Executive Order 13152—Further Amendment to Executive Order 11478, Equal Employment Opportunity in Federal Government

Federal Register
Vol. 65, No. 87
Thursday, May 4, 2000

Presidential Documents

Title 3—

The President

Proclamation 7301 of May 2, 2000

Older Americans Month, 2000

By the President of the United States of America

A Proclamation

Older Americans are a treasured link to our past. With courage, hard work, and unwavering devotion to family, community, and country, our older citizens helped to make the 20th century the American century. They preserved our freedom through the crucible of World War II; opposed Communist aggression in Korea and through the long, dark years of the Cold War; marched for labor reform and civil rights; raised their families, volunteered in their communities, and often postponed their own dreams to fulfill the dreams of their children. Their character, values, and patriotism laid the foundation for the peace and prosperity we enjoy today.

Older Americans have indeed contributed much to the story of our past; and they have much still to offer our future. Today, people are living longer, more active, and more independent lives than ever before, and one in four Americans between the ages of 65 and 69 has a job, either part-time or full-time. Many older Americans want to work, are able to work, and have skills and experience that businesses need in today's booming economy.

Recognizing the changing role of older men and women in our society, this year the Congress unanimously passed, and I was pleased to sign into law, the Senior Citizens' Freedom to Work Act of 2000, which ushers in a new era of opportunity for older Americans. Before passage of this landmark legislation, seniors who continued to work after age 65 risked having some of their Social Security benefits withheld until they stopped working or turned 70 years old. By eliminating this confusing and outdated retirement earnings test, the new legislation will ensure that millions of older workers who wish to continue working will be able to keep their full Social Security benefits regardless of their age or earning level.

It is appropriate that we enact this new law in the year when we celebrate the 65th anniversary of Social Security and the 35th anniversary of Medicare, Medicaid, and the Older Americans Act. Millions of older citizens have been assisted by these programs, and, as the baby boom generation ages, millions more will be relying on them in this new century.

To recognize the profound debt our Nation owes its older citizens, and to prepare wisely for the impact that increasing longevity will have on nearly every aspect of our society in the coming years, we must reaffirm our commitment to saving Social Security, strengthening Medicare—including a prescription drug benefit—and modernizing, improving, and reauthorizing the Older Americans Act. We must also enact my Administration's long-term care initiative, which, among other important measures, provides tax relief and support services to the millions of family caregivers who devote countless hours to helping older loved ones remain in their homes and communities. By doing so, we can both honor the immeasurable contributions that older men and women bring to our national life and ensure that they lead independent, active, fulfilling lives for many years to come.

NOW, THEREFORE, I, WILLIAM J. CLINTON, President of the United States of America, by virtue of the authority vested in me by the Constitution and laws of the United States, do hereby proclaim May 2000 as Older Americans Month. I urge Government officials, business people, community leaders, educators, volunteers, and all the people of the United States to celebrate the contributions older Americans have made, and continue to make, to the progress and prosperity of our Nation.

IN WITNESS WHEREOF, I have hereunto set my hand this second day of May, in the year of our Lord two thousand, and of the Independence of the United States of America the two hundred and twenty-fourth.

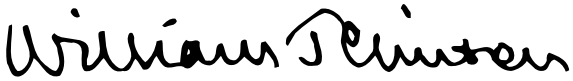

[FR Doc. 00–11335
Filed 5–3–00; 8:45 am]
Billing code 3195–01–P

Presidential Documents

Executive Order 13152 of May 2, 2000

Further Amendment to Executive Order 11478, Equal Employment Opportunity in Federal Government

By the authority vested in me as President by the Constitution and the laws of the United States, and in order to provide for a uniform policy for the Federal Government to prohibit discrimination based on an individual's status as a parent, it is hereby ordered that Executive Order 11478, as amended, is further amended as follows:

Section 1. Amend the first sentence of section 1 by substituting ''sexual orientation, or status as a parent.'' for ''or sexual orientation.''

Sec. 2. Insert the following new sections 6 and 7 after section 5:

''**Sec. 6.** 'Status as a parent' refers to the status of an individual who, with respect to an individual who is under the age of 18 or who is 18 or older but is incapable of self-care because of a physical or mental disability, is:

(a) a biological parent;
(b) an adoptive parent;
(c) a foster parent;
(d) a stepparent;
(e) a custodian of a legal ward;
(f) in loco parentis over such an individual; or
(g) actively seeking legal custody or adoption of such an individual.

''**Sec. 7.** The Office of Personnel Management shall be authorized to develop guidance on the provisions of this order prohibiting discrimination on the basis of an individual's sexual orientation or status as a parent.''

Sec. 3. Amend section 4 by substituting ''and appropriate to carry out its responsibilities under this Order.'' for ''appropriate to carry out this Order.''

Sec. 4. Renumber current sections 6, 7, and 8 as sections 8, 9, and 10, respectively.

Sec. 5. Add a section 11 to read as follows:

''**Sec. 11.** This Executive Order does not confer any right or benefit enforceable in law or equity against the United States or its representatives.''

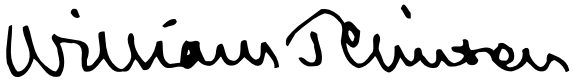

THE WHITE HOUSE,
May 2, 2000.

[FR Doc. 00–11336
Filed 5–3–00; 8:45 am]
Billing code 3195–01–P

Reader Aids

Federal Register

Vol. 65, No. 87

Thursday, May 4, 2000

CUSTOMER SERVICE AND INFORMATION

Federal Register/Code of Federal Regulations

General Information, indexes and other finding aids	**202–523–5227**
Laws	**523–5227**
Presidential Documents	
Executive orders and proclamations	**523–5227**
The United States Government Manual	**523–5227**
Other Services	
Electronic and on-line services (voice)	**523–4534**
Privacy Act Compilation	**523–3187**
Public Laws Update Service (numbers, dates, etc.)	**523–6641**
TTY for the deaf-and-hard-of-hearing	**523–5229**

ELECTRONIC RESEARCH

World Wide Web

Full text of the daily Federal Register, CFR and other publications:

http://www.access.gpo.gov/nara

Federal Register information and research tools, including Public Inspection List, indexes, and links to GPO Access:

http://www.nara.gov/fedreg

E-mail

PENS (Public Law Electronic Notification Service) is an E-mail service for notification of recently enacted Public Laws. To subscribe, send E-mail to

listserv@www.gsa.gov

with the text message:

subscribe PUBLAWS-L your name

Use listserv@www.gsa.gov only to subscribe or unsubscribe to PENS. We cannot respond to specific inquiries.

Reference questions. Send questions and comments about the Federal Register system to:

info@fedreg.nara.gov

The Federal Register staff cannot interpret specific documents or regulations.

FEDERAL REGISTER PAGES AND DATE, MAY

25233–25434 1
25435–25622 2
25623–25828 3
25829–26116 4

CFR PARTS AFFECTED DURING MAY

At the end of each month, the Office of the Federal Register publishes separately a List of CFR Sections Affected (LSA), which lists parts and sections affected by documents published since the revision date of each title.

3 CFR

Proclamations:
7297 25821
7298 25823
7299 25825
7300 25827
7301 26113

Executive Orders:
13151 25619
13152 26115

5 CFR

351 25623
1201 25623

7 CFR

945 25625
981 25233
1205 25236

9 CFR

Proposed Rules:
77 25292

10 CFR

72 25241
420 25265

11 CFR

Proposed Rules:
104 25672

12 CFR

790 25266
900 25267
917 25267
940 25267

Proposed Rules:
900 25676
940 25676
950 25676
955 25676
956 25676

14 CFR

25 25435
39 ..... 25278, 25280, 25281, 25437, 25627, 25829, 25833
71 ..... 25439, 25440
97 ..... 25838, 25842

Proposed Rules:
39 ..... 25694, 25696, 25892
71 ..... 25455, 25456, 25457

17 CFR

4 25980
231 25843
241 25843
270 25630
271 25843

21 CFR

10 25440
13 25440
14 25440
15 25440
203 25639
205 25639
510 25641

23 CFR

668 25441

24 CFR

905 25445

30 CFR

250 25284

31 CFR

560 25642

33 CFR

100 ..... 25446, 25644
117 ..... 25446, 25645, 25646

Proposed Rules:
165 ..... 25458, 25980

37 CFR

Proposed Rules:
201 25894

40 CFR

9 25982
62 25447
141 25982
142 25982
143 25982
180 ..... 25647, 25652, 25655, 25660, 25857, 15860

Proposed Rules:
62 25460
141 25894
142 25894
300 25292

41 CFR

Proposed Rules:
60–1 26088
60–2 26088

42 CFR

414 25664

Proposed Rules:
9 25894
1003 25460

43 CFR

4 25449

47 CFR

22 25451
24 25452
54 25864
73 ....25450, 25453, 25669, 25865

Proposed Rules:
73 ....25463, 25697, 25865

48 CFR

Proposed Rules:
32 25614
52 25614
1503 25899
1552 25899

49 CFR

391 25285

Proposed Rules:
359 25540
390 25540
394 25540
395 25540
398 25540

50 CFR

17 25867
222 25670
223 25670
600 25881
648 25887
660 25881
679 ....25290, 25671

Proposed Rules:
697 25698

REMINDERS

The items in this list were editorially compiled as an aid to Federal Register users. Inclusion or exclusion from this list has no legal significance.

RULES GOING INTO EFFECT MAY 4, 2000

AGRICULTURE DEPARTMENT

Agricultural Marketing Service

Potatoes (Irish) grown in—

Idaho and Oregon; published 5-3-00

ENVIRONMENTAL PROTECTION AGENCY

Pesticides; tolerances in food, animal feeds, and raw agricultural commodities:

Azoxystrobin; published 5-4-00

Cyromazine; published 5-4-00

FEDERAL COMMUNICATIONS COMMISSION

Radio stations; table of assignments:

Oklahoma and Texas; published 4-11-00

Telecommunications Act of 1996

Universal service—

End-user bills; published 5-4-00

POSTAL SERVICE

Domestic Mail Manual:

Deceptive written, printed, and graphic matter; nonmailability; published 4-4-00

SECURITIES AND EXCHANGE COMMISSION

Securities:

Electronic media use; guidance; published 5-4-00

TRANSPORTATION DEPARTMENT

Federal Aviation Administration

Air traffic operating and flight rules, etc.:

Grand Canyon National Park, AZ; special flight rules in vicinity—

Commercial air tour limitation; published 4-4-00

Airworthiness directives:

Airbus; published 3-30-00

Robinson Helicopter Co.; published 4-19-00

COMMENTS DUE NEXT WEEK

AGRICULTURE DEPARTMENT

Agricultural Marketing Service

Federal Seed Act:

Regulations review; comments due by 5-9-00; published 3-10-00

AGRICULTURE DEPARTMENT

Animal and Plant Health Inspection Service

Exportation and importation of animals and animal products:

Ports of entry—

Honolulu, HI; limited port of entry designation; Hawaii Animal Import Center closed; comments due by 5-8-00; published 3-9-00

Interstate transportation of animals and animal products (quarantine):

Tuberculosis in cattle, bison, goats, and captive cervids—

State and area classifications; comments due by 5-8-00; published 5-1-00

Viruses, serums, toxins, etc.:

Autogenous biologics; test summaries, etc.; comments due by 5-8-00; published 3-8-00

COMMERCE DEPARTMENT

National Oceanic and Atmospheric Administration

Endangered and threatened species:

Findings on petitions, etc.—

Smalltooth and largetooth sawfish; comments due by 5-9-00; published 3-10-00

Fishery conservation and management:

Alaska; fisheries of Exclusive Economic Zone—

Bering Sea and Aleutian Islands and Gulf of Alaska groundfish; comments due by 5-8-00; published 4-6-00

Bering Sea tanner crab; comments due by 5-8-00; published 3-7-00

Scallop; comments due by 5-8-00; published 3-9-00

Atlantic highly migratory species—

Pelagic longline management; comments due by 5-12-00; published 4-26-00

West Coast States and Western Pacific fisheries—

Shark; comments due by 5-12-00; published 4-12-00

ENERGY DEPARTMENT

Acquisition regulations:

Management and operating contracts; comments due by 5-12-00; published 3-13-00

ENVIRONMENTAL PROTECTION AGENCY

Air pollutants, hazardous; national emission standards:

Pharmaceuticals production; comments due by 5-10-00; published 4-10-00

Air programs; approval and promulgation; State plans for designated facilities and pollutants:

Alabama; comments due by 5-10-00; published 4-10-00

Mississippi; comments due by 5-8-00; published 4-7-00

Pennsylvania; comments due by 5-8-00; published 4-7-00

Air quality implementation plans; approval and promulgation; various States:

California; comments due by 5-10-00; published 4-10-00

Georgia; comments due by 5-8-00; published 4-7-00

Indiana; comments due by 5-11-00; published 4-11-00

Massachusetts; comments due by 5-11-00; published 4-11-00

Texas; comments due by 5-8-00; published 4-6-00

Freedom of Information Act; implementation; comments due by 5-12-00; published 4-12-00

Superfund program:

National oil and hazardous substances contingency plan—

National priorities list update; comments due by 5-10-00; published 4-10-00

National priorities list update; comments due by 5-10-00; published 4-10-00

Toxic substances:

Methyl Tertiary Butyl Ether (MTBE); elimination or limitation as a fuel additive in gasoline; comments due by 5-8-00; published 3-24-00

FEDERAL ELECTION COMMISSION

Presidential primary and general election candidates; public financing:

Electronic filing of reports; comments due by 5-11-00; published 4-11-00

FEDERAL RESERVE SYSTEM

Membership of State banking institutions (Regulation H):

Financial subsidiaries; comments due by 5-12-00; published 3-20-00

HEALTH AND HUMAN SERVICES DEPARTMENT

Health Care Financing Administration

Medicare:

Clinical diagnostic laboratory services; coverage and administrative policies; negotiated rulemaking; comments due by 5-9-00; published 3-10-00

HOUSING AND URBAN DEVELOPMENT DEPARTMENT

Federal National Mortgage Association (Fannie Mae) and Federal Home Loan Mortgage Corporation (Freddie Mac):

New housing goals for 2000—2003 calendar years; comments due by 5-8-00; published 3-9-00

INTERIOR DEPARTMENT

Fish and Wildlife Service

Endangered and threatened species:

Critical habitat designations—

Alameda whipsnake; comments due by 5-8-00; published 3-8-00

San Diego fairy shrimp; comments due by 5-8-00; published 3-8-00

Spectacled eider; comments due by 5-8-00; published 2-8-00

Steller's eider; comments due by 5-12-00; published 3-13-00

POSTAL SERVICE

Domestic Mail Manual:

Postage and fees refunds; unused adhesive stamps and stamps affixed to unmailed matter; comments due by 5-9-00; published 3-10-00

TRANSPORTATION DEPARTMENT

Coast Guard

Anchorage regulations and ports and waterways safety:

OPSAIL 2000, Deleware River, PA; regulated areas; comments due by 5-12-00; published 3-28-00

Tall Ships Delaware activities, DE; comments due by 5-8-00; published 4-7-00

Electrical engineering:

Marine shipboard electrical cable standards; comments due by 5-8-00; published 2-8-00

Ports and waterways safety:

Naval Station Newport, RI; safety zone; comments due by 5-8-00; published 3-22-00

Newport, RI; safety zone; comments due by 5-8-00; published 3-22-00

Regattas and marine parades, anchorage regulations, and ports and waterways safety:

OPSAIL 2000, Baltimore, MD; regulated areas; comments due by 5-12-00; published 3-28-00

OPSAIL 2000, New London, CT; regulated areas; comments due by 5-12-00; published 3-28-00

TRANSPORTATION DEPARTMENT

Federal Aviation Administration

Airworthiness directives:

Airbus; comments due by 5-8-00; published 4-7-00

Bell; comments due by 5-8-00; published 3-24-00

Boeing; comments due by 5-8-00; published 3-7-00

British Aerospace; comments due by 5-8-00; published 4-7-00

Empresa Brasileira de Aeronautica S.A.; comments due by 5-11-00; published 4-11-00

Eurocopter Deutschland GMBH; comments due by 5-12-00; published 3-13-00

Eurocopter France; comments due by 5-8-00; published 3-9-00

General Electric Co.; comments due by 5-8-00; published 3-9-00

Honeywell International, Inc.; comments due by 5-8-00; published 3-7-00

McDonnell Douglas; comments due by 5-8-00; published 4-11-00

Pratt & Whitney; comments due by 5-8-00; published 3-7-00

Rolls-Royce plc; comments due by 5-8-00; published 3-8-00

Class D and Class E airspace; comments due by 5-8-00; published 3-24-00

Class D and Class E airspace; correction; comments due by 5-8-00; published 4-18-00

Jet routes; comments due by 5-10-00; published 3-23-00

TREASURY DEPARTMENT

Alcohol, Tobacco and Firearms Bureau

Alcoholic beverages:

Wine; labeling and advertising—

Dornfelder; new grape variety name; comments due by 5-8-00; published 3-9-00

TREASURY DEPARTMENT

Internal Revenue Service

Income taxes:

Depletion; treatment of delay rental; comments due by 5-8-00; published 2-8-00

Exclusions from gross income of foreign corporations; comments due by 5-8-00; published 2-8-00

Financial asset securitization investment trusts; real estate mortgage investment conduits; comments due by 5-8-00; published 2-7-00

Nonqualified preferred stock; comments due by 5-10-00; published 1-26-00

Correction; comments due by 5-10-00; published 2-25-00

VETERANS AFFAIRS DEPARTMENT

Adjudication; pensions, compensation, dependency, etc.:

Individual born with spina bifida whose biological father or mother is Vietnam veteran; criteria for monetary allowance; comments due by 5-12-00; published 3-13-00

LIST OF PUBLIC LAWS

This is a continuing list of public bills from the current session of Congress which have become Federal laws. It may be used in conjunction with ''P L U S'' (Public Laws Update Service) on 202–523–6641. This list is also available online at http://www.nara.gov/fedreg.

The text of laws is not published in the **Federal Register** but may be ordered in ''slip law'' (individual pamphlet) form from the Superintendent of Documents, U.S. Government Printing Office, Washington, DC 20402 (phone, 202–512–1808). The text will also be made available on the Internet from GPO Access at http://www.access.gpo.gov/nara/index.html. Some laws may not yet be available.

H.R. 1231/P.L. 106–187

To direct the Secretary of Agriculture to convey certain National Forest lands to Elko County, Nevada, for continued use as a cemetery. (Apr. 28, 2000; 114 Stat. 227)

H.R. 2368/P.L. 106–188

Bikini Resettlement and Relocation Act of 2000 (Apr. 28, 2000; 114 Stat. 228)

H.R. 2862/P.L. 106–189

To direct the Secretary of the Interior to release reversionary interests held by the United States in certain parcels of land in Washington County, Utah, to facilitate an anticipated land exchange. (Apr. 28, 2000; 114 Stat. 229)

H.R. 2863/P.L. 106–190

To clarify the legal effect on the United States of the acquisition of a parcel of land in the Red Cliffs Desert Reserve in the State of Utah. (Apr. 28, 2000; 114 Stat. 230)

H.R. 3063/P.L. 106–191

To amend the Mineral Leasing Act to increase the maximum acreage of Federal leases for sodium that may be held by an entity in any one State, and for other purposes. (Apr. 28, 2000; 114 Stat. 231)

Last List April 27, 2000

Public Laws Electronic Notification Service (PENS)

PENS is a free electronic mail notification service of newly enacted public laws. To subscribe, go to www.gsa.gov/archives/publaws-l.html or send E-mail to **listserv@www.gsa.gov** with the following text message:

SUBSCRIBE PUBLAWS-L Your Name.

Note: This service is strictly for E-mail notification of new laws. The text of laws is not available through this service. **PENS** cannot respond to specific inquiries sent to this address.