AUTHENTICATED
U.S. GOVERNMENT
INFORMATION
GPO

Federal Register

3–31–00 Friday
Vol. 65 No. 63 Mar. 31, 2000
Pages 17127–17434

The **FEDERAL REGISTER** is published daily, Monday through Friday, except official holidays, by the Office of the Federal Register, National Archives and Records Administration, Washington, DC 20408, under the Federal Register Act (44 U.S.C. Ch. 15) and the regulations of the Administrative Committee of the Federal Register (1 CFR Ch. I). The Superintendent of Documents, U.S. Government Printing Office, Washington, DC 20402 is the exclusive distributor of the official edition.

The **Federal Register** provides a uniform system for making available to the public regulations and legal notices issued by Federal agencies. These include Presidential proclamations and Executive Orders, Federal agency documents having general applicability and legal effect, documents required to be published by act of Congress, and other Federal agency documents of public interest.

Documents are on file for public inspection in the Office of the Federal Register the day before they are published, unless the issuing agency requests earlier filing. For a list of documents currently on file for public inspection, see http://www.nara.gov/fedreg.

The seal of the National Archives and Records Administration authenticates the Federal Register as the official serial publication established under the Federal Register Act. Under 44 U.S.C. 1507, the contents of the **Federal Register** shall be judicially noticed.

The **Federal Register** is published in paper and on 24x microfiche. It is also available online at no charge as one of the databases on GPO Access, a service of the U.S. Government Printing Office.

The online edition of the **Federal Register** is issued under the authority of the Administrative Committee of the Federal Register as the official legal equivalent of the paper and microfiche editions (44 U.S.C. 4101 and 1 CFR 5.10). It is updated by 6 a.m. each day the **Federal Register** is published and it includes both text and graphics from Volume 59, Number 1 (January 2, 1994) forward.

GPO Access users can choose to retrieve online **Federal Register** documents as TEXT (ASCII text, graphics omitted), PDF (Adobe Portable Document Format, including full text and all graphics), or SUMMARY (abbreviated text) files. Users should carefully check retrieved material to ensure that documents were properly downloaded.

On the World Wide Web, connect to the **Federal Register** at http://www.access.gpo.gov/nara. Those without World Wide Web access can also connect with a local WAIS client, by Telnet to swais.access.gpo.gov, or by dialing (202) 512-1661 with a computer and modem. When using Telnet or modem, type swais, then log in as guest with no password.

For more information about GPO Access, contact the GPO Access User Support Team by E-mail at gpoaccess@gpo.gov; by fax at (202) 512–1262; or call (202) 512–1530 or 1–888–293–6498 (toll free) between 7 a.m. and 5 p.m. Eastern time, Monday–Friday, except Federal holidays.

The annual subscription price for the **Federal Register** paper edition is $555, or $607 for a combined **Federal Register,** Federal Register Index and List of CFR Sections Affected (LSA) subscription; the microfiche edition of the **Federal Register** including the Federal Register Index and LSA is $220. Six month subscriptions are available for one-half the annual rate. The charge for individual copies in paper form is $8.00 for each issue, or $8.00 for each group of pages as actually bound; or $1.50 for each issue in microfiche form. All prices include regular domestic postage and handling. International customers please add 25% for foreign handling. Remit check or money order, made payable to the Superintendent of Documents, or charge to your GPO Deposit Account, VISA, MasterCard or Discover. Mail to: New Orders, Superintendent of Documents, P.O. Box 371954, Pittsburgh, PA 15250–7954.

There are no restrictions on the republication of material appearing in the **Federal Register.**

How To Cite This Publication: Use the volume number and the page number. Example: 65 FR 12345.

Printed on recycled paper.

SUBSCRIPTIONS AND COPIES

PUBLIC	
Subscriptions:	
Paper or fiche	**202–512–1800**
Assistance with public subscriptions	**512–1806**
General online information	**202–512–1530; 1–888–293–6498**
Single copies/back copies:	
Paper or fiche	**512–1800**
Assistance with public single copies	**512–1803**
FEDERAL AGENCIES	
Subscriptions:	
Paper or fiche	**523–5243**
Assistance with Federal agency subscriptions	**523–5243**

FEDERAL REGISTER WORKSHOP

THE FEDERAL REGISTER: WHAT IT IS AND HOW TO USE IT

FOR: Any person who uses the Federal Register and Code of Federal Regulations.

WHO: Sponsored by the Office of the Federal Register.

WHAT: Free public briefings (approximately 3 hours) to present:

1. The regulatory process, with a focus on the Federal Register system and the public's role in the development regulations.
2. The relationship between the Federal Register and Code of Federal Regulations.
3. The important elements of typical Federal Register documents.
4. An introduction to the finding aids of the FR/CFR system.

WHY: To provide the public with access to information necessary to research Federal agency regulations which directly affect them. There will be no discussion of specific agency regulations.

WASHINGTON, DC

WHEN: April 18, 2000

WHERE: Conference Room, Suite 700
Office of the Federal Register
800 North Capitol Street, NW.
Washington, DC
(3 blocks north of Union Station Metro)

RESERVATIONS: 202–523–4538

Contents

Federal Register

Vol. 65, No. 63

Friday, March 31, 2000

African Development Foundation
NOTICES
Meetings; Sunshine Act, 17249

Agricultural Research Service
NOTICES
Patent licenses; non-exclusive, exclusive, or partially exclusive:
Azure Waves Seafood, Inc., 17252–17253

Agriculture Department
See Agricultural Research Service
See Farm Service Agency
See Food Safety and Inspection Service
See Natural Resources Conservation Service
See Rural Business-Cooperative Service
See Rural Housing Service
See Rural Utilities Service
NOTICES
Agency information collection activities:
Submission for OMB review; comment request, 17249–17251
Privacy Act:
Systems of records, 17251–17252

Architectural and Transportation Barriers Compliance Board
PROPOSED RULES
Electronic and information technology accessibility standards, 17346–17367

Army Department
NOTICES
Agency information collection activities:
Proposed collection; comment request; correction, 17343

Blind or Severely Disabled, Committee for Purchase From People Who Are
See Committee for Purchase From People Who Are Blind or Severely Disabled

Coast Guard
PROPOSED RULES
Pollution:
Hazardous substances; marine transportation-related facility response plans, 17416–17434

Commerce Department
See International Trade Administration
See National Oceanic and Atmospheric Administration
See Patent and Trademark Office
NOTICES
Agency information collection activities:
Submission for OMB review; comment request, 17255–17256

Committee for Purchase From People Who Are Blind or Severely Disabled
NOTICES
Procurement list; additions and deletions, 17254–17255

Defense Department
See Army Department

Employment and Training Administration
NOTICES
Adjustment assistance:
Cadillac Curtain Corp., 17314
Georgia Pacific et al., 17314–17315
Key Manufacturing Co., 17315
Adjustment assistance and NAFTA transitional adjustment assistance:
Kellogg Co., 17311–17312
Simonds Industries et al., 17312–17314
Grants and cooperative agreements; availability, etc.:
Job Training Partnership Act—
Skills Shortages, Partnership Training/System Building Demonstration Program, 17315
NAFTA transitional adjustment assistance:
Cadillac Curtain Corp., 17315

Employment Standards Administration
NOTICES
Minimum wages for Federal and federally-assisted construction; general wage determination decisions, 17315–17316

Energy Department
See Federal Energy Regulatory Commission

Environmental Protection Agency
RULES
Air quality implementation plans; approval and promulgation; various States:
Missouri, 17164–17166
Pesticides; tolerances in food, animal feeds, and raw agricultural commodities:
Glufosinate ammonium, 17170–17179
Water programs:
Water quality planning and management; listing requirements, 17166–17170
PROPOSED RULES
Air quality implementation plans; approval and promulgation; various States:
California, 17229–17236
Pesticides; tolerances in food, animal feeds, and raw agricultural commodities:
Fenthion, etc., 17236–17239
Water pollution control:
Ocean dumping; site designations—
Coos Bay, OR, 17240–17246
NOTICES
Agency information collection activities:
Proposed collection; comment request, 17258–17263
Submission for OMB review; comment request, 17263–17264
Air pollutants, hazardous; national emission standards:
Maximum achievable control technology standards—
Indiana, 17264
Air pollution control:
Clean Air Act grants—
Nevada, 17264–17265
Environmental statements; availability, etc.:
Agency statements—
Comment availability, 17266
Weekly receipts, 17265

Reports and guidance documents; availability, etc.:
Food Quality Protection Act; science policy issues—
Non-detected/non-quantified pesticide residues; value assignments, 17266–17268

Executive Office of the President
See Trade Representative, Office of United States

Farm Service Agency
PROPOSED RULES
Program regulations:
Loans to Indian Tribes and tribal corporations, 17206

Federal Aviation Administration
RULES
Class E airspace, 17133–17134
PROPOSED RULES
Airworthiness directives:
Bombardier, 17206–17211

Federal Communications Commission
RULES
Radio stations; table of assignments:
Arkansas, 17179
Kansas, 17180
Louisiana, 17179–17180
PROPOSED RULES
Frequency allocations and radio treaty matters:
Software defined radios; inquiry, 17246–17248
Radio stations; table of assignments:
Louisiana, 17248
NOTICES
Common carrier services:
Wireless telecommunications services—
800 MHz specialized mobile service licenses auction; 851-854 MHz band; reserve prices or minimum opening bids, etc., 17268–17272
800 MHz specialized mobile service licenses auction; lower 80 channels; reserve prices or minimum opening bids, etc., 17272–17276

Federal Energy Regulatory Commission
RULES
Electric utilities (Federal Power Act):
Open access same-time information system (OASIS) and standards of conduct—
Uniform business practices, 17370–17413
NOTICES
Applications, hearings, determinations, etc.:
CNG Transmission Corp., 17258
Texas Gas Transmission Corp., 17258

Federal Highway Administration
NOTICES
Meetings:
Intelligent Transportation Society of America, 17332–17333

Federal Labor Relations Authority
NOTICES
Amici curiae briefs in negotiability proceeding pending before FLRA; opportunity to submit
Withdrawn, 17276–17277

Federal Reserve System
RULES
Truth in lending (Regulation Z):
Short-term cash advances (payday loans), 17129–17132
NOTICES
Meetings; Sunshine Act, 17277

Federal Trade Commission
NOTICES
Premerger notification waiting periods; early terminations, 17277–17282

Food and Drug Administration
RULES
Administrative practice and procedure:
New animal drug applications; designated journals list; removals; effective date, 17134
Food additives:
Polymers—
Ethylene-vinyl acetate-vinyl alcohol copolymers, 17134–17135
Medical devices:
Cigarettes and smokeless tobacco products; restriction of sale and distribution to protect children and adolescents; revocation, 17135–17136
Information processing procedures; obtaining, submitting, executing, and filing of forms; change of addresses, 17136–17138
Reclassification of 28 preamendments class III devices into class II, 17138–17148
NOTICES
Agency information collection activities:
Proposed collection; comment request, 17282–17284
Submission for OMB review; comment request, 17284–17285
Medical devices:
Premarket approval applications, list; safety and effectiveness summaries availability, 17285–17286

Food Safety and Inspection Service
RULES
Meat and poultry inspection:
Sodium diacetate, sodium acetate, sodium lactate and potassium lactate; use as food additives
Effective date, 17128–17129

Health and Human Services Department
See Food and Drug Administration
See Health Resources and Services Administration

Health Resources and Services Administration
NOTICES
Grants and cooperative agreements; availability, etc.:
Health insurance coverage; State planning grants, 17286–17289

Housing and Urban Development Department
NOTICES
Agency information collection activities:
Proposed collection; comment request, 17289
Submission for OMB review; comment request, 17289–17292
Grants and cooperative agreements; availability, etc.:
Facilities to assist homeless—
Excess and surplus Federal property, 17292–17293

Immigration and Naturalization Service
RULES
Nationality:
Naturalization grants; revocation, 17127–17128
NOTICES
Agency information collection activities:
Proposed collection; comment request, 17309–17310

Indian Affairs Bureau
NOTICES
Agency information collection activities:
Proposed collection; comment request, 17293–17294
Indian tribes, acknowledgment of existence determinations, etc.:
Eastern Pequot Indians of Connecticut, 17299–17304
Paucatuck Eastern Pequot Indians of Connecticut, 17294–17299

Interior Department
See Indian Affairs Bureau
See Land Management Bureau
See National Park Service
See Reclamation Bureau
See Surface Mining Reclamation and Enforcement Office

Internal Revenue Service
RULES
Excise taxes:
Kerosene, aviation fuel, heavy trucks and trailers, and highway vehicle use taxes; taxable fuel measurement and reporting, 17149–17164
Income taxes:
Retirement plans; new technologies; electronic transmission of notices and consents
Correction, 17148–17149
PROPOSED RULES
Excise taxes:
Diesel fuel dye injection systems; partially withdrawn, 17211

International Trade Administration
NOTICES
Antidumping:
Circular welded non-alloy steel pipe from—
Mexico, 17256
Collated roofing nails from—
Taiwan, 17256–17257
Preserved mushrooms from—
China, 17257–17258

International Trade Commission
NOTICES
Import investigations:
Pipe and tube from—
Various countries, 17307–17308
Welded stainless steel pipe from—
Korea and Taiwan, 17308–17309

Justice Department
See Immigration and Naturalization Service
See National Institute of Corrections

Labor Department
See Employment and Training Administration
See Employment Standards Administration
See Occupational Safety and Health Administration
NOTICES
Meetings:
North American Agreement on Labor Cooperation National Advisory Committee, 17311

Land Management Bureau
NOTICES
Coal leases, exploration licenses, etc.:
Montana, 17304–17305
Recreation management restrictions, etc.:
Wonder Valley, CA; recreational shooting restriction; supplemental rule, 17305

National Highway Traffic Safety Administration
RULES
Anthropomorphic test devices:
Occupant crash protection—
12-month-old infant crash test dummy, 17180–17196
Motor vehicle safety standards:
Occupant crash protection—
Offset deformable barrier, 17196–17204
NOTICES
Motor vehicle theft prevention standards; exemption petitions, etc.:
General Motors Corp., 17333–17335

National Institute of Corrections
NOTICES
Grants and cooperative agreements; availability, etc.:
Comprehensive Objective Prison Classification Systems Development, 17310–17311

National Oceanic and Atmospheric Administration
RULES
Fishery conservation and management:
Alaska; fisheries of Exclusive Economic Zone—
Groundfish, 17204–17205
Pollock, 17205

National Park Service
NOTICES
Native American human remains and associated funerary objects:
Bernice Pauahi Bishop Museum, Honolulu, HI—
Tobacco pipe, etc., from Oahu, HI, 17305–17307

Natural Resources Conservation Service
NOTICES
Field office technical guides; changes:
Texas, 17253

Nuclear Regulatory Commission
NOTICES
Decommissioning plans; sites:
Aberdeen Proving Ground, MD; U.S. Army Research Laboratory; Depleted Uranium Study Area, Transonic Range, 17321–17322
Picatinny Arsenal, NJ; U.S. Army Tank-Automotive and Armaments Command; Building 611B, 17322–17323
Applications, hearings, determinations, etc.:
Quivira Mining Co., 17321

Occupational Safety and Health Administration
NOTICES
Grants and cooperative agreements; availability, etc.:
Susan Harwood Training Grant Program, 17316–17321

Office of United States Trade Representative
See Trade Representative, Office of United States

Patent and Trademark Office
PROPOSED RULES
Patent cases:
Twenty-year patent term; patent term adjustment; implementation, 17215–17229

Public Health Service
See Food and Drug Administration

See Health Resources and Services Administration

Reclamation Bureau
NOTICES
Meetings:
CALFED Bay-Delta Ecosystem Restoration Program; pre-submittal workshop, 17307

Research and Special Programs Administration
NOTICES
Hazardous materials transportation:
Preemption determinations—
American Trucking Associations, Inc., 17335–17340

Rural Business-Cooperative Service
PROPOSED RULES
Program regulations:
Loans to Indian Tribes and tribal corporations, 17206
NOTICES
Agency information collection activities:
Proposed collection; comment request, 17253–17254

Rural Housing Service
PROPOSED RULES
Program regulations:
Loans to Indian Tribes and tribal corporations, 17206

Rural Utilities Service
PROPOSED RULES
Program regulations:
Loans to Indian Tribes and tribal corporations, 17206

Securities and Exchange Commission
NOTICES
Self-regulatory organizations; proposed rule changes:
Cincinnati Stock Exchange, Inc., 17323–17325
New York Stock Exchange, Inc., 17325–17328
Options Clearing Corp., 17328–17329
Pacific Exchange, Inc., 17329–17330

Small Business Administration
RULES
Business loans:
Liquidation of collateral and sale of disaster assistance loans, 17132–17133
NOTICES
Agency information collection activities:
Submission for OMB review; comment request, 17330–17331
Disaster loan areas:
Alabama, 17331
Georgia, 17331
Louisiana, 17331

Surface Mining Reclamation and Enforcement Office
PROPOSED RULES
Permanent program and abandoned mine land reclamation plan submissions:
North Dakota, 17211–17213
Oklahoma, 17213–17215

Surface Transportation Board
NOTICES
Railroad operation, acquisition, construction, etc.:
Burlington Northern & Santa Fe Railway Co., 17341
Union Pacific Railroad Co., 17341

Tennessee Valley Authority
NOTICES
Agency information collection activities:
Proposed collection; comment request, 17331–17332

Trade Representative, Office of United States
NOTICES
World Trade Organization:
Trade Agreements Act; government procurement thresholds, 17332

Transportation Department
See Coast Guard
See Federal Aviation Administration
See Federal Highway Administration
See National Highway Traffic Safety Administration
See Research and Special Programs Administration
See Surface Transportation Board

Treasury Department
See Internal Revenue Service
NOTICES
Agency information collection activities:
Proposed collection; comment request, 17341–17342

Separate Parts In This Issue

Part II
Architectural and Transportation Barriers Compliance Board, 17345–17367

Part III
Federal Energy Regulatory Commission, 17369–17413

Part IV
Department of Transportation, Coast Guard, 17415–17434

Reader Aids
Consult the Reader Aids section at the end of this issue for phone numbers, online resources, finding aids, reminders, and notice of recently enacted public laws.

CFR PARTS AFFECTED IN THIS ISSUE

A cumulative list of the parts affected this month can be found in the Reader Aids section at the end of this issue.

7 CFR
Proposed Rules:
770 17206
1823 17206
1956 17206

8 CFR
340 17127

9 CFR
424 17128

12 CFR
226 17129

13 CFR
120 17132

14 CFR
71 17133
Proposed Rules:
39 (2 documents) 17206, 17208

18 CFR
37 17370

21 CFR
10 17134
12 17134
177 17134
510 17134
801 17135
803 (2 documents) 17135, 17136
807 (2 documents) 17135, 17136
812 17136
814 17136
820 17135
860 17136
864 17138
866 17138
870 17138
872 17138
874 17138
876 17138
878 17138
884 17138
886 17138
888 17138
897 17135
1005 17136
1010 17136
1020 17136
1040 17136

26 CFR
1 17148
35 17148
40 17149
41 17149
47 17149
48 17149
145 17149
602 17148
Proposed Rules:
48 17211

30 CFR
Proposed Rules:
934 17211
936 17213

33 CFR
Proposed Rules:
154 17416

36 CFR
Proposed Rules:
1194 17346

37 CFR
Proposed Rules:
1 17215

40 CFR
52 17164
130 17166
180 17170
Proposed Rules:
52 (2 documents) 17229, 17231
70 17231
180 17236
228 17240

47 CFR
73 (3 documents) 17179, 17180
Proposed Rules:
2 17246
73 17248

49 CFR
572 17180
587 17196

50 CFR
679 (2 documents) 17204, 17205

Rules and Regulations

Federal Register
Vol. 65, No. 63
Friday, March 31, 2000

This section of the FEDERAL REGISTER contains regulatory documents having general applicability and legal effect, most of which are keyed to and codified in the Code of Federal Regulations, which is published under 50 titles pursuant to 44 U.S.C. 1510.

The Code of Federal Regulations is sold by the Superintendent of Documents. Prices of new books are listed in the first FEDERAL REGISTER issue of each week.

DEPARTMENT OF JUSTICE

Immigration and Naturalization Service

8 CFR Part 340

[INS No. 1858–97]

RIN 1115–AF63

Revoking Grants of Naturalization

AGENCY: Immigration and Naturalization Service, Justice.

ACTION: Interim rule with request for comments.

SUMMARY: This rule amends the Immigration and Naturalization Service (Service) regulations relating to administrative revocation of naturalization by changing the burden of proof the Service must satisfy in order to administratively revoke a grant of naturalization and clarifying the 180-day period for the rendering of the district director's decision. This rule clarifies these issues in the final rule that was published in the **Federal Register** on October 28, 1996, at 61 FR 55550.

DATES: *Effective date:* This rule is effective March 31, 2000.

Comment date: Written comments must be submitted on or before May 30, 2000.

ADDRESSES: Please submit written comments, in triplicate, to the Director, Policy Directives and Instructions Branch, Immigration and Naturalization Service, 425 I Street NW, Room 5307, Washington, DC 20536. To ensure proper handling, please reference INS No. 1858–97 on your correspondence. Comments are available for public inspection at the above address by calling (202) 514–3048 to arrange for an appointment.

FOR FURTHER INFORMATION CONTACT: Janice B. Podolny, Office of the General Counsel, Immigration and Naturalization Service, 425 I Street, NW, Room 6100, Washington, DC 20536, telephone (202) 514–2895.

SUPPLEMENTARY INFORMATION: Section 310(a) of the Immigration and Nationality Act (the Act), 8 U.S.C. 1421(a), gives the Attorney General the sole authority to grant a person naturalization as a United States citizen. As a concomitant to the authority under section 310(a), section 340(h) of the Act, 8 U.S.C. 1451(h), preserves the Attorney General's authority to ''correct, reopen, alter, modify, or vacate an order naturalizing [a] person'' as a United States citizen. On October 28, 1996, the Service published a final rule in the **Federal Register** at 61 FR 55550 promulgating regulations at 8 CFR 340.1, to provide a regulatory procedure for exercising this authority.

The Service's final rule provided that the Service could reopen a naturalization proceeding and revoke naturalization if the Service obtained ''credible and probative evidence'' that the individual's naturalization was subject to revocation. The regulation provided that after this initial showing by the Service, the burden of proof shifted to the individual whose naturalization was subject to revocation to establish that he or she was, in fact, eligible for naturalization. The Service, however, determined that it would adhere to the higher standard of proof applicable in judicial denaturalization proceedings, rather than the credible and probative standard. Accordingly, the Service has only initiated revocation proceedings where it has obtained clear, unequivocal, and convincing evidence and has revoked naturalization only in cases where the Service is able to sustain this burden throughout the administrative proceeding.

Consistent with this approach, the Service has made every effort, including review of all proposed revocation cases at the Headquarters level, to ensure that revocation of naturalization be pursued only if the evidence meets this higher standard. This interim rule changes the applicable burden of proof to conform with Service practice. This interim rule provides that the Service will only initiate revocation proceedings based on clear unequivocal, and convincing evidence with the burden of proof remaining with the Service throughout the administrative process. If it comes to the attention of the Service that in any case that became final before March 31, 2000, the Service relied on the lower standard of proof, the Service will, on its own motion, reconsider the decision under the clear, unequivocal, and convincing standard of proof.

In addition, this interim rule clarifies that the expiration of the 180-day period for the district director's decision does not preclude the district director from making a final decision on the merits. Consequently, this interim rule indicates that the Service should, where practicable, render a decision within 180 days of service of the notice of intent to reopen naturalization proceedings and to revoke naturalization. This ensures that the Service is able to carefully review all of the evidence in every administrative revocation case and render a correct decision without overly rigid and artificial time restrictions. Since this naturalized citizen continues to enjoy the rights of citizenship until the decision to reopen and revoke naturalization becomes administratively final, this amendment does not adversely affect the rights of the naturalized citizen.

Notice and Comment

Since this regulation simply restates the higher burden of proof that the Service has been applying in administrative revocation proceedings, this rule is a general statement of policy. The change to the 180-day period to render a decision is an interpretative rule of agency practice and procedure. The Service, therefore, has authority under 5 U.S.C. 553 to adopt this rule without prior notice and comment. The Commissioner, nevertheless, considers it appropriate to seek public comments on this rule, and has established a 60-day comment period.

Despite the comment period, this rule is an interim rule that will enter into force upon publication in the **Federal Register**. Because the current 8 CFR 340.1 places the burden of proof on the naturalized citizen, naturalized citizens may, in good faith, misunderstand the evidentiary standards and procedural requirements that the Service must satisfy in order to reopen and revoke a grant of naturalization. The Service has already ensured that each notice of intent to reopen naturalization proceedings and to revoke naturalization states the burden of proof as clear, unequivocal, and convincing

evidence. By clarifying the burden of proof that the Service has been adhering to in practice, this interim rule provides full protection of the naturalization citizen's rights. For this reason, the Commissioner finds that it would be contrary to the public interest for the Service to observe the 30-day delay that must ordinarily apply before a new regulation may enter into force. The Commissioner, therefore, also finds that good cause exists for making this rule effective upon publication in the **Federal Register**.

Regulatory Flexibility Act

The Commissioner of the Immigration and Naturalization Service, in accordance with the Regulatory Flexibility Act (5 U.S.C. 605(b)), has reviewed this regulation and, by approving it, certifies that the rule will not have a significant economic impact on a substantial number of small entities. This rule proposes a procedure for the Service to revoke grants of naturalization. The affected parties are not small entities, and the impact of the regulation is not an economic one.

Unfunded Mandates Reform Act of 1995

This rule will not result in the expenditure, in the aggregate, of $100 million of more in any 1 year, by State, local, and tribal government, or by the private sector, and the rule will not significantly or uniquely affect small government. Therefore, no actions were deemed necessary under the provisions of the Unfunded Mandates Reform Act of 1995.

Small Business Regulatory Enforcement Fairness Act of 1996

This rule is not a major rule as defined by section 804 of the Small Business Regulatory Enforcement Fairness Act of 1996. This rule will not result in an annual effect on the economy of $100 million or more; a major increase in cost or prices; or significant adverse effects on competition, employment, investment, productivity, innovation, or on the ability of United States-based companies to compete with foreign-based companies in domestic and export markets.

Executive Order 12866

This rule is considered by the Office of Management and Budget to be a ''significant regulatory action'' under Executive Order 12866, section 3(f), Regulatory Planning and Review. Accordingly, the Service has submitted this regulation to the Office of Management and Budget for review.

Executive Order 13132

This regulation will not have substantial direct effects on the States, on the relationship between the National Government and the States, or on the distribution of power and responsibilities among the various levels of government. Therefore, in accordance with section 6 of Executive Order 13132, it is determined that this rule does not have sufficient federalism implications to warrant the preparation of a federalism summary impact statement.

Executive Order 12988 Civil Justice Reform

This rule meets the applicable standards provided in sections 3(a) and 3(b)(2) of Executive Order 12988.

List of Subjects in 8 CFR Part 340

Citizenship and naturalization, Law enforcement.

Accordingly, part 340 of chapter I of title 8 of the Code of Federal Regulations is amended as follows:

1. The authority citation for part 340 continues to read as follows:

Authority: 8 U.S.C. 1103, 1443.

2. Section 340.1 is amended by:

a. Revising paragraph (a) introductory text;

b. Revising paragraph (b)(6); and by

c. Revising paragraph (d)(1), to read as follows:

§ 340.1 Reopening of a naturalization application by a district director pursuant to section 340(h) of the Act.

(a) *Reopening general.* On its own motion, the Service may reopen a naturalization proceeding and revoke naturalization in accordance with this section, if the Service obtains clear, convincing, and unequivocal evidence which:

* * * * *

(b) * * *

(6) *Burden of proof.* Upon service of a notice of intent to reopen naturalization proceedings and to revoke naturalization, the Service bears the burden of proof by clear, convincing, and unequivocal evidence that the grounds for reopening and revoking set forth in the notice have been met.

* * * * *

(d) * * *

(1) The district director shall render, where practicable, a written decision on the reopened naturalization application within 180 days of service of the notice of intent to reopen naturalization proceedings and to revoke naturalization. The decision shall consist of findings of fact, conclusions of law, and a final determination on the naturalization application. Notice of decision shall be served on the applicant or his or her attorney or representative, if applicable.

* * * * *

Dated: March 24, 2000.

Doris Meissner,

Commissioner, Immigration and Naturalization Service.

[FR Doc. 00–7963 Filed 3–30–00; 8:45 am]

BILLING CODE 4410–10–M

DEPARTMENT OF AGRICULTURE

Food Safety and Inspection Service

9 CFR part 424

[Docket No. 99–028N]

Food Additives for Use in Meat and Poultry Products: Sodium Diacetate, Sodium Acetate, Sodium Lactate and Potassium Lactate

AGENCY: Food Safety and Inspection Service, USDA.

ACTION: Affirmation of effective date for direct final rule.

SUMMARY: On January 20, 2000, the Food Safety and Inspection Service (FSIS) published a direct final rule ''Food Additives for Use in Meat and Poultry Products: Sodium Diacetate, Sodium Acetate, Sodium Lactate and Potassium Lactate'' in the **Federal Register**. This direct final rule notified the public of FSIS' intention to amend the Federal meat and poultry products inspection regulations to allow the use of these additives in meat and poultry products.

EFFECTIVE DATE: March 20, 2000.

FOR FURTHER INFORMATION CONTACT: Robert Post, Director, Labeling and Additives Policy Division, Office of Policy, Program Development and Evaluation, Food Safety and Inspection Service, U.S. Department of Agriculture, Washington, DC 20250–3700; (202) 205–0279.

SUPPLEMENTARY INFORMATION:

Background

FSIS published a direct final rule, ''Food Additives for Use in Meat and Poultry Products: Sodium Diacetate, Sodium Acetate, Sodium Lactate and Potassium Lactate'' (65 FR 3121, 1/20/00). This direct final rule amended the Federal meat and poultry products inspection regulations by increasing the permissible levels of sodium acetate as a flavor enhancer in meat and poultry products and of sodium diacetate as a flavor enhancer and as an inhibitor of the growth of pathogens. This direct

final rule also permitted the use of sodium lactate and potassium lactate in meat and poultry products, except for infant formulas and infant food, for purposes of inhibiting the growth of certain pathogens. This direct final rule was in response to petitions received by Armour Swift-Ekrich and Purac America, Inc.

FSIS provided for a 30-day comment period ending on February 22, 2000. FSIS received no comments in response to the direct final rule. Therefore, the amendments to the regulations will be effective on March 20, 2000.

Done at Washington, DC, on: March 27, 2000.

Thomas J. Billy,

Administrator.

[FR Doc. 00–8007 Filed 3–30–00; 8:45 am]

BILLING CODE 3410–DM–P

FEDERAL RESERVE SYSTEM

12 CFR Part 226

[Regulation Z; Docket No. R–1050]

Truth in Lending

AGENCY: Board of Governors of the Federal Reserve System.

ACTION: Final rule.

SUMMARY: The Board is publishing revisions to the official staff commentary to Regulation Z (Truth in Lending). The commentary applies and interprets the requirements of Regulation Z. The revisions address short-term cash advances commonly called ''payday loans.'' The Board is also publishing technical corrections to the commentary and regulation.

DATES: This rule is effective March 24, 2000. Compliance is optional until October 1, 2000.

FOR FURTHER INFORMATION CONTACT: Natalie E. Taylor, Counsel, or Michael L. Hentrel or David A. Stein, Staff Attorneys; Division of Consumer and Community Affairs, Board of Governors of the Federal Reserve System, at (202) 452–3667 or 452–2412; for users of Telecommunications Device for the Deaf (TDD) *only*, contact Janice Simms at (202) 872–4984.

SUPPLEMENTARY INFORMATION:

I. Background

The purpose of the Truth in Lending Act (TILA; 15 U.S.C. 1601 *et seq.*) is to promote the informed use of consumer credit by providing for disclosures about its terms and cost. The act requires creditors to disclose the cost of credit as a dollar amount (the finance charge) and as an annual percentage rate (APR). Uniformity in creditors' disclosures is intended to assist consumers in comparison shopping. TILA requires additional disclosures for loans secured by consumers' homes and permits consumers to rescind certain transactions that involve their principal dwelling. The act also regulates certain practices of creditors.

TILA is implemented by the Board's Regulation Z (12 CFR part 226). The Board's official staff commentary (12 CFR part 226 (Supp. I)) interprets the regulation, and provides guidance to creditors in applying the regulation to specific transactions. The commentary is a substitute for individual staff interpretations; it is updated periodically to address significant questions that arise.

In November 1999, the Board published proposed amendments to the commentary (64 FR 60368, November 5, 1999). The Board received more than 50 comment letters. Most of the comments were from financial institutions, other creditors, and their representatives. Comments were also received from state attorneys general, state regulatory agencies, and consumer advocates. The comment letters were focused on the proposed comment concerning payday loans. Most commenters supported the proposal. A few commenters, mostly payday lenders and their representatives, were opposed.

As discussed below, the commentary is being adopted substantially as proposed. Some revisions have been made for clarity in response to commenters' suggestions. The commentary revision concerning payday loans clarifies that when such transactions involve an agreement to defer payment of a debt, they are within the definition of credit in TILA and Regulation Z. Several technical corrections are being made to the commentary and regulation.

II. Regulatory Revisions

Subpart B—Open-End Credit

Section 226.5a—Credit and Charge Card Applications and Solicitations

5a(a) General Rules.

5a(a)(3) Exceptions.

Section 226.5a(a)(3) is republished to correct a technical error. This section was published in its entirety in 1989. (54 FR 13865, April 6, 1989.) A portion of the text was inadvertently omitted from subsequent publications of the Code of Federal Regulations (54 FR 24670, June 9, 1989).

Section 226.12–Special Credit Card Provisions

12(g) Relation to Electronic Fund Transfer Act and Regulation Z.

Section 226.12(g) contains a reference and citation to the Board's Regulation E (Electronic Fund Transfers), 12 CFR Part 205. Technical amendments have been made to conform the citation in section 226.12(g) with organizational changes made to Regulation E in 1996. The references to sections 205.5 and 205.6 of Regulation E are replaced by a reference to section 205.12(a).

III. Commentary Revisions

Subpart A—General

Section 226.2—Definitions and Rules of Construction

2(a) Definitions.

2(a)(14) Credit.

The Board proposed to add comment 2(a)(14)–2 to clarify that transactions commonly known as ''payday loans'' constitute credit for purposes of TILA. These transactions may also be known as ''cash advance loans,'' ''check advance loans,'' ''post-dated check loans,'' ''delayed deposit checks,'' or ''deferred deposit checks.''

Typically in such transactions, a cash advance is made to a consumer in exchange for the consumer's personal check, or the consumer's authorization to debit the consumer's deposit account electronically. In either case, the consumer pays a fee in connection with the advance. Both parties understand that the amount advanced is not, or may not be, available from the consumer's deposit account at the time of the exchange. The parties agree, therefore, that the consumer's check will not be cashed or deposited for collection (or the consumer's deposit account debited) until a designated future date. On that date, the consumer may have the option of repaying the obligation or further deferring repayment of the advance. The consumer may repay the obligation in various ways, for example, by providing cash or by allowing the obligee to deposit the consumer's check or electronically debit the consumer's deposit account.

Most commenters supported the proposal because they believed that payday loans are credit transactions. A few commenters opposed the proposal. These commenters questioned whether payday loans should be covered under TILA when applicable state law does not treat such transactions as credit. They were concerned that Regulation Z would preempt state law where, for example, the transactions are regulated under check-cashing laws, and they also

asserted that providing TILA disclosures would result in unnecessary compliance costs. These commenters also questioned whether disclosure of the APR in such transactions provides consumers with useful information. One commenter asserted that the proposed comment's scope was unclear, and believed the comment might be interpreted too broadly, resulting in the application of Regulation Z to noncredit transactions. This commenter also suggested that payday lenders will be unable to determine whether transactions are consumer credit or for an exempt purpose, such as business credit.

For the reasons discussed below, comment 2(a)(14)–2 is adopted to clarify that payday loans, and similar transactions where there is an agreement to defer payment of a debt, constitute credit for purposes of TILA. Some revisions have been made for clarity to address commenters' concerns.

Consistent with section 103(e) of TILA, section 226.2(a)(14) of Regulation Z defines ''credit'' as the right to defer the payment of debt or the right to incur debt and defer its payment. Comment 2(a)(14)–2 is intended to provide an example of a specific transaction that involves an agreement to defer payment of a debt. In these transactions, the consumer receives a cash advance in exchange for the consumer's check or authorization to debit the consumer's deposit account. Because there is also an agreement to defer presentment of the check or defer debiting the consumer's account, there is an agreement to defer payment of the debt. Such agreements are deemed to be ''credit'' as defined by section 226.2(a)(14), however they are described—as payday loans, cash advances, check advance loans, deferred presentment transactions, or by another name. Contemporaneous check-cashing transactions will not be affected where there is no agreement to defer presentment of the consumer's check; the routine delay in debiting a consumer's deposit account during the check collection process does not constitute credit.

TILA, as implemented by Regulation Z, reflects the intent of the Congress to provide consumers with uniform cost disclosures to promote the informed use of credit and assist consumers in comparison shopping. This purpose is furthered by applying the regulation to transactions, such as payday loans, that fall within the statutory definition of credit, regardless of how such transactions are treated or regulated under state law. The fact that some creditors may have to comply with state laws as well as with Regulation Z, and that creditors may bear compliance costs, is not a sufficient basis to disregard TILA's applicability to the covered transactions. Where a creditor is unable to determine if a transaction is primarily for an exempt purpose, such as business-purpose credit, the creditor is free to make disclosures under TILA, and the fact that disclosures are made would not be controlling on the question of whether the transaction was exempt. See Comment 3(a)–1.

A few commenters questioned the effect of the proposed comment on state laws that regulate payday loans and similar transactions. Section 226.28 of Regulation Z describes the effect of TILA on state laws. As a general matter, state laws are preempted if they are inconsistent with the act and regulation, and then only to the extent of the inconsistency. A state law is inconsistent if it requires or permits creditors to make disclosures or take actions that contradict the requirements of federal law. A state law may not be deemed inconsistent if it is more protective of consumers.

TILA does not impair a state's authority to regulate or prohibit payday lending activities. Persons that regularly extend payday loans and otherwise meet the definition of creditor (§ 226.2(a)(17)) are required, however, to provide disclosures to consumers consistent with the requirements of Regulation Z. The Board notes that a number of state statutes expressly require payday lenders to provide federal TILA disclosures. The Board will review any issues brought to its attention regarding the effect of TILA and Regulation Z on particular state laws. Appendix A to Regulation Z outlines the Board's procedures for making such determinations.

Some commenters expressed concern that by referring specifically to ''payday loans,'' the proposed comment might be limited to transactions labeled as such. Comment 2(a)(14)–2 has been modified to address this concern. Transactions in which the parties agree to defer payment of a debt are ''credit'' transactions regardless of the label used to describe them.

In describing payday loan transactions, the proposed comment referred to the fact that consumers typically must pay a fee. Some commenters questioned whether such fees are finance charges for purposes of Regulation Z. These commenters noted that under some state laws, the fees charged for payday loans and similar transactions are not considered interest or finance charges.

A fee charged in connection with a payday loan may be a finance charge for purposes of TILA pursuant to section 226.4 of Regulation Z, regardless of how the fee is characterized for state law purposes. Where the fee charged constitutes a finance charge under TILA, and the person advancing funds regularly extends consumer credit, that person is a creditor covered by Regulation Z. See § 226.2(a)(17). Comment 2(a)(14)–2 has been revised to reflect this guidance.

A few commenters sought clarification on whether payday lenders obtain a security interest in the check provided by a consumer. Under Regulation Z, the existence of a security interest is determined by the applicable state law. See § 226.2(a)(25). Once a security interest is determined to exist, it must be disclosed according to section 226.6(c) for open-end credit plans, or section 226.18(m) for closed-end transactions. If a creditor is unsure whether a particular interest is a security interest under applicable law, the creditor may at its option treat it as a security interest for purposes of TILA. See Comment 2(a)(25)–1.

Comment 2(a)(14)–2 has been added as an example of a specific type of transaction that involves an agreement to defer payment of a debt. Because such a transaction falls within the existing statutory and regulatory definition of ''credit,'' the comment does not represent a change in the law. Generally, updates to the Board's staff commentary are effective upon publication. Consistent with the requirements of section 105(d) of TILA, however, the Board typically provides an implementation period of six months or longer. During that period, compliance with the published update is optional so that creditors may adjust their documents to accommodate TILA's disclosure requirements.

Subpart B—Open-End Credit

Section 226.13—Billing Error Resolution

13(i) Relation to Electronic Fund Transfer Act and Regulation E.

A technical amendment has been made to comment 13(i)–3 to conform a citation to Regulation E with organizational changes made to that regulation. The reference to section 205.11(e) of Regulation E has been replaced with a reference to section 205.11(c).

Subpart C—Closed-End Credit

Section 226.19—Certain Residential Mortgage and Variable-Rate Transactions

19(b) Certain variable-rate transactions.

The Board is adopting technical amendments to comments 19(b)–5, 19(b)(2)–4, 19(b)(2)(vi)–1, and 19(b)(2)(vii)–1 to conform the citations in those comments to section 226.19(b)(2) of Regulation Z, as amended. No substantive change is intended.

Subpart E—Special Rules for Certain Home Mortgage Transactions

Section 226.32—Requirements for Certain Closed-end Home Mortgages

32(a) Coverage.

32(a)(1)(ii).

TILA, as amended by the Home Ownership and Equity Protection Act of 1994 (HOEPA), imposes additional disclosure requirements and substantive limitations on certain closed-end mortgage loans bearing rates or fees above a certain percentage or amount. See § 226.32. Such loans are covered by HOEPA if the total points and fees payable by the consumer at or before loan closing exceed the greater of $400 or 8 percent of the total loan amount. HOEPA requires the Board to adjust the $400 amount annually on January 1 by the annual percentage change in the Consumer Price Index (CPI) that was reported on the preceding June 1. (15 U.S.C. 1602(aa)(3) and 12 CFR 226.32(a)(1)(ii)). The adjusted amount for 2000 ($451), published on November 5, 1999 (64 FR 60335), is added to comment 32(a)(1)(ii)–2.

32(c) Disclosures.

32(c)(4) Variable-rate.

The Board is revising comment 32(c)(4)–1 to conform the citations in the comment to section 226.19(b)(2) of Regulation Z, as amended. No substantive change is intended.

List of Subjects in 12 CFR Part 226

Advertising, Federal Reserve System, Mortgages, Reporting and recordkeeping requirements, Truth in lending.

For the reasons set forth in the preamble, the Board amends 12 CFR part 226 as follows:

PART 226—TRUTH IN LENDING (REGULATION Z)

1. The authority citation for part 226 continues to read as follows:

Authority: 12 U.S.C. 3806; 15 U.S.C. 1604 and 1637(c)(5).

2. Section 226.5a(a)(3) is revised to read as follows:

Subpart B—Open-End Credit

§ 226.5a Credit and charge card applications and solicitations

(a) * * *

(3) *Exceptions.* This section does not apply to home-equity plans accessible by a credit or charge card that are of the type subject to the requirements of § 226.5b; overdraft lines of credit tied to asset accounts accessed by check-guarantee cards or by debit cards; or lines of credit accessed by check-guarantee cards or by debit cards that can be used only at automated teller machines.

* * * * *

3. In § 226.12, paragraph (g) is revised to read as follows:

* * * * *

§ 226.12 Special credit card provisions.

* * * * *

(g) *Relation to Electronic Fund Transfer Act and Regulation E.* For guidance on whether Regulation Z (12 CFR part 226) or Regulation E (12 CFR part 205) applies in instances involving both credit and electronic fund transfer aspects, refer to Regulation E, 12 CFR 205.12(a) regarding issuance and liability for unauthorized use. On matters other than issuance and liability, this section applies to the credit aspects of combined credit/electronic fund transfer transactions, as applicable.

4. In Supplement I to Part 226:

a. Under *Section 226.2—Definitions and Rules of Construction*, under *2(a)(14) Credit.*, paragraph 2. is added.

b. Under *Section 226.13—Billing Error Resolution*, under *13(i) Relation to Electronic Fund Transfer Act and Regulation E.*, paragraph 3. is revised.

c. Under *Section 226.19—Certain Residential Mortgage and Variable-Rate Transactions*, under *19(b) Certain variable-rate transactions*, paragraph 5. is revised.

d. Under *Section 226.19—Certain Residential Mortgage and Variable-Rate Transactions*, under *Paragraph 19(b)(2)*, paragraph 4. is amended by removing ''§ 226.19(b)(2)(xi)'' and adding ''§ 226.19(b)(2)(x)'' in its place.

e. Under *Section 226.19—Certain Residential Mortgage and Variable-Rate Transactions*, under *Paragraph 19(b)(2)(vi)*, paragraph 1. is amended by removing ''comments 19(b)(2)(viii)–7 and 19(b)(2)(x)–4'' and adding ''comments 19(b)(2)(viii)(A)–7 and 19(b)(2)(viii)(B)–4'' in its place.

f. Under *Section 226.19—Certain Residential Mortgage and Variable-Rate Transactions*, under *Paragraph 19(b)(2)(vii)*, paragraph 1. is amended by removing ''comments 19(b)(2)(viii)–6 and 19(b)(2)(x)–3'' and adding ''comments 19(b)(2)(viii)(A)–6 and 19(b)(2)(viii)(B)–3'' in its place.

g. Under *Section 226.32—Requirements for Certain Closed-End Home Mortgages*, under *paragraph 32(a)(1)(ii),* the second sentence of paragraph 2. is revised and paragraph 2.v. is added; and

h. Under *Section 226.32—Requirements for Certain Closed-End Home Mortgages*, under *paragraph 32(c)(4),* paragraph 1. is amended by removing ''§ 226.19(b)(2)(x)'' and adding ''§ 226.19(b)(2)(viii)(B)'' in its place.

SUPPLEMENT I TO PART 226 OFFICIAL STAFF INTERPRETATIONS

* * * * *

Subpart A—General

* * * * *

Section 226.2—Definitions and Rules of Construction

2(a) Definitions.

* * * * *

2(a)(14) Credit.

* * * * *

2. *Payday loans; deferred presentment.* Credit includes a transaction in which a cash advance is made to a consumer in exchange for the consumer's personal check, or in exchange for the consumer's authorization to debit the consumer's deposit account, and where the parties agree either that the check will not be cashed or deposited, or that the consumer's deposit account will not be debited, until a designated future date. This type of transaction is often referred to as a ''payday loan'' or ''payday advance'' or ''deferred presentment loan.'' A fee charged in connection with such a transaction may be a finance charge for purposes of § 226.4, regardless of how the fee is characterized under state law. Where the fee charged constitutes a finance charge under § 226.4 and the person advancing funds regularly extends consumer credit, that person is a creditor and is required to provide disclosures consistent with the requirements of Regulation Z. See § 226.2(a)(17).

* * * * *

Subpart B-Open-End Credit

* * * * *

Section 226.13—Billing Error Resolution

* * * * *

13(i) Relation to Electronic Fund Transfer Act and Regulation E.

* * * * *

3. *Application to debit/credit transactions-examples.* If a consumer withdraws money at an automated teller machine and activates an overdraft credit feature on the checking account:

i. An error asserted with respect to the transaction is subject, for error resolution purposes, to the applicable Regulation E provisions (such as timing and notice) for the entire transaction.

ii. The creditor need not provisionally credit the consumer's account, under

§ 205.11(c)(2)(i) of Regulation E, for any portion of the unpaid extension of credit.

iii. The creditor must credit the consumer's account under § 205.11(c) with any finance or other charges incurred as a result of the alleged error.

iv. The provisions of § 226.13(d) and (g) apply only to the credit portion of the transaction.

* * * * *

Subpart C—Closed-End Credit

* * * * *

Section 226.19—Certain Residential Mortgage and Variable-Rate Transactions

* * * * *

19(b) Certain variable-rate transactions.

* * * * *

5. *Examples of variable-rate transactions.*

i. The following transactions, if they have a term greater than one year and are secured by the consumer's principal dwelling, constitute variable-rate transactions subject to the disclosure requirements of § 226.19(b).

A. Renewable balloon-payment instruments where the creditor is both unconditionally obligated to renew the balloon-payment loan at the consumer's option (or is obligated to renew subject to conditions within the consumer's control) and has the option of increasing the interest rate at the time of renewal. (See comment 17(c)(1)–11 for a discussion of conditions within a consumer's control in connection with renewable balloon-payment loans.)

B. Preferred-rate loans where the terms of the legal obligation provide that the initial underlying rate is fixed but will increase upon the occurrence of some event, such as an employee leaving the employ of the creditor, and the note reflects the preferred rate. The disclosures under §§ 226.19(b)(1) and 226.19(b)(2)(v), (viii), (ix), and (xii) are not applicable to such loans.

C. ''Price-level-adjusted mortgages'' or other indexed mortgages that have a fixed rate of interest but provide for periodic adjustments to payments and the loan balance to reflect changes in an index measuring prices or inflation. The disclosures under § 226.19(b)(1) are not applicable to such loans, nor are the following provisions to the extent they relate to the determination of the interest rate by the addition of a margin, changes in the interest rate, or interest-rate discounts: Section 226.19(b)(2)(i), (iii), (iv), (v), (vi), (vii), (viii), and (ix). (See comments 20(c)–2 and 30–1 regarding the inapplicability of variable-rate adjustment notices and interest-rate limitations to price-level-adjusted or similar mortgages.)

ii. Graduated-payment mortgages and step-rate transactions without a variable-rate feature are not considered variable-rate transactions.

* * * * *

Subpart E—Special Rules for Certain Home Mortgage Transactions

* * * * *

Section 226.32—Requirements for Certain Closed-End Home Mortgages

32(a) Coverage

* * * * *

Paragraph 32(a)(1)(ii)

* * * * *

2. *Annual adjustment of $400 amount.* * * * The $400 figure is adjusted annually on January 1 by the annual percentage change in the CPI that was in effect on the preceding June 1. * * *

* * * * *

v. For 2000, $451, reflecting a 2.3 percent increase in the CPI–U from June 1998 to June 1999, rounded to the nearest whole dollar.

* * * * *

By order of the Board of Governors of the Federal Reserve System, acting through the Director of the Division of Consumer and Community Affairs and the Secretary of the Board under delegated authority, March 24, 2000.

Robert deV. Frierson,

Associate Secretary of the Board.

[FR Doc. 00–7714 Filed 3–30–00; 8:45 am]

BILLING CODE 6210–01–P

SMALL BUSINESS ADMINISTRATION

13 CFR Part 120

Liquidation of Collateral, Sale of Loans

AGENCY: Small Business Administration (SBA).

ACTION: Final rule.

SUMMARY: With this rule, SBA amends its regulation regarding the liquidation and sale of loans. As part of a government-wide initiative, federal credit agencies are being directed by the Office of Management and Budget (OMB) to sell their loan portfolios. Previously, SBA amended its regulations to permit the sale of direct and purchased loans made under the authorities of the 7(a) and 501, 502, 503, and 504 programs (64 FR 44109). This final rule will permit SBA to sell its physical disaster home loans, physical disaster business loans and economic injury disaster loans (collectively referred to as Disaster Assistance Loans) in addition to direct and purchased commercial loans. This will include sales of both secured and unsecured Disaster Assistance Loans in performing and non-performing status. The Disaster Assistance Loans will be sold to qualified bidders by means of competitive procedures at publicly advertised sales. Bidder qualifications will be set for each sale in accordance with the terms and conditions of each sale.

DATES: This rule is effective May 1, 2000.

FOR FURTHER INFORMATION CONTACT: Richard Blewett, 202–205–4202.

SUPPLEMENTARY INFORMATION: SBA promulgates without change, a rule which it proposed on January 10, 2000 (65 FR 1349). SBA received no comments on the proposed rule and thus, is publishing the final rule as proposed.

13 CFR 120.540 sets forth SBA's policy for the liquidation of collateral and the sale of commercial loans. SBA amends and expands this rule to include the sale of Disaster Assistance Loans in asset sales. Public Law 104–134, the ''Debt Collection Improvement Act of 1996,'' enacted on April 26, 1996, provides that, ''the head of an executive * * * agency may sell, subject to section 504(b) of the Federal Credit Reform Act of 1990 and using competitive procedures, any non-tax debt owed to the United States that is delinquent for more than 90 days.'' 31 U.S.C. 3711(i)(1).

The Small Business Act, 15 U.S.C. 634(b)(2), provides that ''[The Administrator] may sell at public or private sale * * * in [her] discretion . . . any evidence of debt * * * personal property, or security * * *.'' It further provides in 15 U.S.C. 634(b)(7) that the Administrator may ''take any and all actions * * * when [she] determines such actions are necessary or desirable in * * * liquidating or otherwise dealing with or realizing on loans * * *.'' Pursuant to this statutory authority, SBA is establishing an Asset Sales Program to sell portions of its direct and participation loan portfolios.

Compliance With Executive Orders 13132, 12988, and 12866, the Regulatory Flexibility Act (5 U.S.C. 601–612), and the Paperwork Reduction Act (44 U.S.C. Ch. 35)

SBA has determined that this final rule is not a significant rule within the meaning of Executive Order 12866, since it is not likely to have an annual economic effect of $100 million or more, result in a major increase in costs or prices, or have a significant adverse effect on competition or the U.S. economy.

SBA has determined that this final rule will not have a significant economic impact on a substantial number of small entities within the meaning of the Regulatory Flexibility Act, 5 U.S.C. 601–612. This regulation concerns the ability of SBA to sell disaster loans as part of SBA's Asset Sales Program. There will be no economic impact upon the small businesses that received those loans because the loans that will be sold are merely changing ownership, so no new

funding is involved. The purchaser of the loans will be bound by the terms of the loan documents in the same manner as SBA. The Agency does not anticipate that any additional costs will be placed upon small entities. Therefore, SBA believes that there will be no economic impact on small businesses.

Nevertheless, even if it is assumed that there is an economic impact, this rule would still only have a minimal effect on an insubstantial number of small businesses. This is because SBA's total disaster business loan portfolio at the end of FY 1999 was 64,832 loans, as contrasted with an estimated total of 24 million small businesses in the United States (as estimated by SBA's Office of Advocacy).

SBA has determined that this final rule does not impose any additional reporting or recordkeeping requirements under the Paperwork Reduction Act, 44 U.S.C., chapter 35.

For purposes of Executive Order 13132, SBA has determined that this final rule has no federalism implications.

For purposes of Executive Order 12988, SBA has determined that this final rule is drafted, to the extent practicable, to accord with the standards set forth in section 3 of that Order.

List of Subjects in 13 CFR Part 120

Loan programs—business.

For the reasons stated in the preamble, SBA amends 13 CFR part 120 as follows:

PART 120—BUSINESS LOANS

1. The authority citation for part 120 continues to read as follows:

Authority: 15 U.S.C. 634 (b)(6) and 636(a) and (h).

2. In § 120.540, revise the section heading and amend the first sentence of paragraph (b)(4) as follows:

§ 120.540 What are SBA's policies concerning the liquidation of collateral and the sale of business loans and physical disaster assistance loans, physical disaster business loans and economic injury disaster loans?

* * * * *

(b) * * *

(4) Sell direct and purchased 7(a) and 501, 502, 503 and 504 loans and physical disaster home loans, physical disaster business loans and economic injury disaster loans in asset sales. * * *

* * * * *

Dated: March 21, 2000.

Aida Alvarez,

Administrator.

[FR Doc. 00–7944 Filed 3–30–00; 8:45 am]

BILLING CODE 8025–01–P

DEPARTMENT OF TRANSPORTATION

Federal Aviation Administration

14 CFR Part 71

[Airspace Docket No. 00–ASO–4]

Establishment of Class E Airspace; Andrews—Murphy, NC

AGENCY: Federal Aviation Administration (FAA), DOT.

ACTION: Final rule.

SUMMARY: This action establishes Class E airspace at Andrews—Murphy, NC. A Global Positioning System (GPS) Standard Instrument Approach Procedure (SIAP), helicopter point in space approach, has been developed for Andrews—Murphy, NC. As a result, additional controlled airspace extending upward from 700 feet Above Ground Level (AGL) is needed to accommodate the SIAP.

DATES: Effective 0901 UTC, June 15, 2000.

FOR FURTHER INFORMATION CONTACT: Nancy B. Shelton, Manager, Airspace Branch, Air Traffic Division, Federal Aviation Administration, P.O. Box 20636, Atlanta, Georgia 30320; telephone (404) 305–5627.

SUPPLEMENTARY INFORMATION:

History

On February 14, 2000, the FAA proposed to amend part 71 of the Federal Aviation Regulations (14 CFR part 71) by establishing Class E airspace at Andrews—Murphy, NC (65 FR 7320). This action provides adequate Class E airspace for IFR operations at Andrews—Murphy, NC. Designations for Class E airspace extending upward from 700 feet or more above the surface are published in Paragraph 6005 of FAA Order 7400.9G, dated September 1, 1999, and effective September 16, 1999, which is incorporated by reference in 14 CFR part 71.1. The Class E designation listed in this document will be published subsequently in the Order.

Interested parties were invited to participate in this rulemaking proceeding by submitting written comments on the proposal to the FAA. No comments objecting to the proposal were received.

The Rule

This amendment to part 71 of the Federal Aviation Regulations (14 CFR part 71) establishes Class E airspace at Andrews—Murphy, NC.

The FAA has determined that this regulation only involves an established body of technical regulations for which frequent and routine amendments are necessary to keep them operationally current. It, therefore, (1) is not a ''significant regulatory action'' under Executive Order 12866; (2) is not a ''significant rule'' under DOT Regulatory Policies and Procedures (44 FR 11034; February 26, 1979); and (3) does not warrant preparation of a Regulatory Evaluation, as the anticipated impact is so minimal. Since this is a routine matter that will only affect air traffic procedures and air navigation, it is certified that this rule will not have a significant economic impact on a substantial number of small entities under the criteria of the Regulatory Flexibility Act.

List of Subjects in 14 CFR Part 71

Airspace, Incorporation by Reference, Navigation (air).

Adoption of the Amendment

In consideration of the foregoing, the Federal Aviation Administration amends 14 CFR part 71 as follows:

PART 71—DESIGNATION OF CLASS A, CLASS B, CLASS C, CLASS D AND CLASS E AIRSPACE AREAS; AIRWAYS; ROUTES; AND REPORTING POINTS

1. The authority citation for 14 CFR part 71 continues to read as follows:

Authority: 49 U.S.C. 106(g), 40103, 40113, 40120; EO 10854, 24 FR 9565, 3 CFR, 1959–1963 Comp., p. 389.

§ 71.1 [Amended]

2. the incorporation by reference in 14 CFR 71.1 of Federal Aviation Administration Order 7400.9G, Airspace Designations and Reporting Points, dated September 1, 1999, and effective September 16, 1999, is amended as follows:

Paragraph 6005 Class E Airspace Areas Extending Upward from 700 feet or More above the Surface of the Earth.

* * * * *

ASO NC E5 Andrews—Murphy, NC [New]

Andrews—Murphy, NC

Point in Space Coordinates

(Lat. 34°11′10″N, long. 83°52′57″W)

That airspace extending upward from 700 feet or more above the surface within a 6-mile radius of the point in space (lat.

34°11′10′′N, long 83°52′57″W) serving Andrews—Murphy, NC

* * * * *

Issued in College Park, Georgia, on March 20, 2000.

Nancy B. Shelton,

Acting Manager, Air Traffic Division, Southern Region.

[FR Doc. 00–7959 Filed 3–30–00; 8:45 am]

BILLING CODE 4910–13–M

DEPARTMENT OF HEALTH AND HUMAN SERVICES

Food and Drug Administration

21 CFR Parts 10, 12, and 510

[Docket No. 99N–4957]

Removal of Designated Journals; Confirmation of Effective Date

AGENCY: Food and Drug Administration, HHS.

ACTION: Direct final rule; confirmation of effective date.

SUMMARY: The Food and Drug Administration (FDA) is confirming the effective date of April 24, 2000 for the final rule that appeared in the **Federal Register** of December 10, 1999 (64 FR 69188). The direct final rule amends the regulation that lists the veterinary and scientific journals available in FDA's library. The purpose of the list is to allow individuals to reference articles from listed journals in new animal drug application documents submitted to Dockets Management Branch, and objections and requests for hearing on a regulation or order instead of submitting a copy or reprint of the article. FDA is taking this action because this list of journals is outdated and because individuals rarely use the regulation. This document confirms the effective date of the direct final rule.

DATES: Effective date confirmed: April 24, 2000.

FOR FURTHER INFORMATION CONTACT: Gail L. Schmerfeld, Center for Veterinary Medicine (HFV–100), Food and Drug Administration, 7500 Standish Pl., Rockville, MD 20855, 301–827–0205.

SUPPLEMENTARY INFORMATION: In the **Federal Register** of December 10, 1999 (64 FR 69188), FDA solicited comments concerning the direct final rule for a 75-day period ending February 23, 2000. FDA stated that the effective date of the direct final rule would be on April 24, 2000, 60 days after the end of the comment period, unless any significant adverse comment was submitted to FDA during the comment period. FDA did not receive any significant adverse comments.

Therefore, under the Federal Food, Drug, and Cosmetic Act and under authority delegated to the Commissioner of Food and Drugs, the amendments issued thereby will go into effect on April 24, 2000.

Dated: March 24, 2000.

William K. Hubbard,

Senior Associate Commissioner for Policy, Planning, and Legislation.

[FR Doc. 00–7936 Filed 3–30–00; 8:45 am]

BILLING CODE 4160–01–F

DEPARTMENT OF HEALTH AND HUMAN SERVICES

Food and Drug Administration

21 CFR Part 177

[Docket No. 94F–0246]

Indirect Food Additives: Polymers

AGENCY: Food and Drug Administration, HHS.

ACTION: Final rule.

SUMMARY: The Food and Drug Administration (FDA) is amending the food additive regulations to provide for the safe use of ethylene-vinyl acetate-vinyl alcohol copolymers with revised specifications that provide for a decreased minimum acceptable ethylene content and an increased maximum permitted level of migration of ethylene-vinyl acetate-vinyl alcohol oligomers for use as articles or components of articles intended for contact with food. This action responds to a petition filed by Kuraray Co., Ltd.

DATES: This rule is effective March 31, 2000. Submit written objections and requests for a hearing by May 1, 2000. The Director of the Office of the Federal Register approves the incorporation by reference in accordance with 5 U.S.C. 552(a) and 1 CFR part 51 of a certain publication in 21 CFR 177.1360(d), as of March 31, 2000.

ADDRESSES: Submit written objections to the Dockets Management Branch (HFA–305), Food and Drug Administration, 5630 Fishers Lane, rm. 1061, Rockville, MD 20852.

FOR FURTHER INFORMATION CONTACT: Mitchell A. Cheeseman, Center for Food Safety and Applied Nutrition (HFS–215), Food and Drug Administration, 200 C St. SW., Washington, DC 20204, 202–418–3083.

SUPPLEMENTARY INFORMATION: In a notice published in the **Federal Register** of August 17, 1994 (59 FR 42277), FDA announced that a food additive petition (FAP 4B4421) had been filed by Kuraray Co., Ltd., c/o 1001 G St. NW., suite 500 West, Washington, DC 20001. The petition proposed to amend § 177.1360 *Ethylene-vinyl acetate-vinyl alcohol copolymers* (21 CFR 177.1360) of the food additive regulations to provide for the safe use of ethylene-vinyl acetate-vinyl alcohol copolymers with revised specifications that provide for a decreased minimum acceptable ethylene content and an increased maximum permitted level of migration of ethylene-vinyl acetate-vinyl alcohol oligomers for use as articles or components of articles intended for contact with food.

FDA has evaluated data in the petition and other relevant material. Based on this information, the agency concludes that: (1) The proposed use of the additive is safe, (2) the additive will achieve its intended technical effect, and (3) the regulations in § 177.1360 should be amended as set forth below.

In accordance with § 171.1(h) (21 CFR 171.1(h)), the petition and the documents that FDA considered and relied upon in reaching its decision to approve the petition are available for inspection at the Center for Food Safety and Applied Nutrition by appointment with the information contact person listed above. As provided in § 171.1(h), the agency will delete from the documents any materials that are not available for public disclosure before making the documents available for inspection.

The agency has carefully considered the potential environmental effects of this action. FDA has concluded that the action will not have a significant impact on the human environment, and that an environmental impact statement is not required. The agency's finding of no significant impact and the evidence supporting that finding, contained in an environmental assessment, may be seen in the Dockets Management Branch (address above) between 9 a.m. and 4 p.m., Monday through Friday.

This final rule contains no collections of information. Therefore, clearance by the Office of Management and Budget under the Paperwork Reduction Act of 1995 is not required.

Any person who will be adversely affected by this regulation may at any time file with the Dockets Management Branch (address above) written objections by May 1, 2000. Each objection shall be separately numbered, and each numbered objection shall specify with particularity the provisions of the regulation to which objection is made and the grounds for the objection. Each numbered objection on which a hearing is requested shall specifically so

state. Failure to request a hearing for any particular objection shall constitute a waiver of the right to a hearing on that objection. Each numbered objection for which a hearing is requested shall include a detailed description and analysis of the specific factual information intended to be presented in support of the objection in the event that a hearing is held. Failure to include such a description and analysis for any particular objection shall constitute a waiver of the right to a hearing on the objection. Three copies of all documents are to be submitted and are to be identified with the docket number found in brackets in the heading of this document. Any objections received in response to the regulation may be seen in the Dockets Management Branch between 9 a.m. and 4 p.m., Monday through Friday.

List of Subjects in 21 CFR Part 177

Food additives, Food packaging, Incorporation by reference.

Therefore, under the Federal Food, Drug, and Cosmetic Act and under authority delegated to the Commissioner of Food and Drugs and redelegated to the Director, Center for Food Safety and Applied Nutrition, 21 CFR part 177 is amended as follows:

PART 177—INDIRECT FOOD ADDITIVES: POLYMERS

1. The authority citation for 21 CFR part 177 continues to read as follows:

Authority: 21 U.S.C. 321, 342, 348, 379e.

2. Section 177.1360 is amended by revising paragraphs (a)(3) and (d) to read as follows:

§ 177.1360 Ethylene-vinyl acetate-vinyl alcohol copolymers.

* * * * *

(a) * * *

(3) Those copolymers containing 17 to 40 percent ethylene and 60 to 83 percent vinyl alcohol units by weight may be used in contact with foods as described in paragraph (d) of this section.

* * * * *

(d) The finished food-contact article shall not exceed 0.018 centimeter (0.007 inch) thickness and may contact all foods, except those containing more than 8 percent alcohol, under conditions of use B through H described in table 2 of § 176.170(c) of this chapter. Film samples of 0.018 centimeter (0.007 inch) thickness representing the finished articles shall meet the following extractive limitation when tested by ASTM method F34–76 (Reapproved 1980), ''Standard Test Methods for Liquid Extraction of Flexible Barrier Materials,'' which is incorporated by reference. The availability of this incorporation by reference is given in paragraph (b) of this section. The film when extracted with distilled water at 100 °C (212 °F) for 30 minutes yields ethylene-vinyl acetate-vinyl alcohol oligomers not to exceed 0.093 milligram per square centimeter (0.6 milligram per square inch) of food contact surface as determined by a method entitled ''Analytical Method of Determining the Amount of EVOH in the Extractives Residue of EVOH Film,'' dated March 23, 1987, as developed by the Kuraray Co., Ltd., which is incorporated by reference in accordance with 5 U.S.C. 552(a) and 1 CFR part 51. Copies may be obtained from the Office of Premarket Approval (HFS–200), Center for Food Safety and Applied Nutrition, Food and Drug Administration, 200 C St. SW., Washington, DC 20204, or may be examined at the Center for Food Safety and Applied Nutrition's Library, 200 C St. SW., rm. 3321, Washington, DC, or at the Office of the Federal Register, 800 North Capitol St. NW., suite 700, Washington, DC.

* * * * *

Dated: March 20, 2000.

L. Robert Lake,

Director of Regulations and Policy, Center for Food Safety and Applied Nutrition.

[FR Doc. 00–8037 Filed 3–30–00; 8:45 am]

BILLING CODE 4160–01–F

DEPARTMENT OF HEALTH AND HUMAN SERVICES

Food and Drug Administration

21 CFR Parts 801, 803, 807, 820, and 897

[Docket No. 95N–0253]

RIN 0910–AA48

Regulations Restricting the Sale and Distribution of Cigarettes and Smokeless Tobacco to Protect Children and Adolescents; Revocation

AGENCY: Food and Drug Administration, HHS.

ACTION: Final rule.

SUMMARY: The Food and Drug Administration (FDA) is revoking its regulations governing access to and promotion of nicotine-containing cigarettes and smokeless tobacco to children and adolescents. This action is being taken in response to the Supreme Court decision of March 21, 2000 in which the court held that Congress has not given FDA the authority to regulate tobacco products as customarily marketed. This action will result in the removal of the regulations.

DATES: This rule is effective March 31, 2000.

FOR FURTHER INFORMATION CONTACT: Anne Kirchner, Office of the Commissioner (HF–13), 5600 Fishers Lane, Rockville, MD 20857, 301–827–0585.

SUPPLEMENTARY INFORMATION:

I. Background

In the **Federal Register** of August 11, 1995 (60 FR 41314), We (FDA) issued proposed regulations to restrict the sale and distribution of cigarettes and smokeless tobacco to children and adolescents. In addition, we issued a jurisdictional determination that cigarettes and smokeless tobacco products are combination products consisting of a drug (nicotine) and device components intended to deliver nicotine to the body. We issued final regulations based on this proposal in the **Federal Register** of August 28, 1996 (61 FR 44398).

On March 21, 2000, in *Food and Drug Administration* vs. *Brown & Williamson Tobacco Corp., et al.*, the Supreme Court ruled that Congress has not granted FDA jurisdiction to regulate tobacco products as customarily marketed. In accordance with this ruling, we are hereby removing our regulations restricting the sale and distribution of cigarettes and smokeless tobacco to children and adolescents. Publication of this document constitutes final action under the Administrative Procedure Act (5 U.S.C. 553(b)(3)(B)). We are also addressing the additional steps necessitated by the courts ruling, such as termination of state contracts to help enforce the age and photo identification requirements of the regulations.

List of Subjects

21 CFR Part 801

Labeling, Medical devices, Reporting and recordkeeping requirements.

21 CFR Part 803

Imports, Medical devices, Reporting and recordkeeping requirements.

21 CFR Part 807

Confidential business information, Imports, Medical devices, Reporting and recordkeeping requirements.

21 CFR Part 820

Medical devices, Reporting and recordkeeping requirements.

21 CFR Part 897

Advertising, Cigarettes, Labeling, Sale and distribution, Smokeless tobacco.

Therefore, under the Federal Food, Drug, and Cosmetic Act and under authority delegated to the Commissioner of Food and Drugs, 21 CFR parts 801, 803, 807, and 820 are amended and part 897 is removed as follows:

PART 801—LABELING

1. The authority citation for 21 CFR part 801 continues to read as follows:

Authority: 21 U.S.C. 321, 331, 351, 352, 360i, 360j, 371, 374.

§ 801.126 [Removed]

2. Remove § 801.126.

PART 803—MEDICAL DEVICE REPORTING

3. The authority citation for 21 CFR part 803 continues to read as follows:

Authority: 21 U.S.C. 352, 360, 360i, 360j, 371, 374.

4. Amend § 803.19 by removing paragraphs (f) and (g).

PART 807—ESTABLISHMENT REGISTRATION AND DEVICE LISTING FOR MANUFACTURERS AND INITIAL DISTRIBUTORS OF DEVICES

5. The authority citation for 21 CFR part 807 continues to read as follows:

Authority: 21 U.S.C. 331, 351, 352, 360, 360e, 360c, 360i, 360j, 371, 374.

6. Amend § 807.65 by removing paragraph (j).

PART 820—QUALITY SYSTEM REGULATION

7. The authority citation for 21 CFR part 820 continues to read as follows:

Authority: 351, 352, 360, 360c, 360e, 360h, 360i, 360j, 360l, 371, 374, 381, 383.

8. Amend § 820.1 by removing paragraphs (e) and (f).

PART 897—[REMOVED]

9. Remove part 897.

Dated: March 28, 2000.

William K. Hubbard,

Senior Associate Commissioner for Policy, Planning, and Legislation.

[FR Doc. 00–7960 Filed 3–30–00; 8:45 am]

BILLING CODE 4160–01–F

DEPARTMENT OF HEALTH AND HUMAN SERVICES

Food and Drug Administration

21 CFR Parts 803, 807, 812, 814, 860, 1005, 1010, 1020, and 1040

[Docket No. 00N–0784]

Medical Devices; Information Processing Procedures; Obtaining, Submitting, Executing, and Filing of Forms: Change of Addresses

AGENCY: Food and Drug Administration, HHS.

ACTION: Final rule.

SUMMARY: The Food and Drug Administration (FDA) is amending procedural regulations that pertain to obtaining, submitting, executing, and filing certain documents to reflect new addresses in the agency. All filings and other documents subject to these regulations must be directed to the new address. This action is being taken to ensure the accuracy of FDA's regulations.

DATES: This rule is effective March 31, 2000.

FOR FURTHER INFORMATION CONTACT: Domini H. Cassis, Center for Devices and Radiological Health (HFZ–215), Food and Drug Administration, 1350 Piccard Dr., Rockville, MD 20850, 301–827–2964.

SUPPLEMENTARY INFORMATION: This rule reflects the relocation of certain component offices within the agency that are responsible for processing documents relating to medical devices. This administrative action is limited to changing specific addresses for obtaining, submitting, executing, and filing certain documents, but it makes no other changes in filing requirements.

This document is published as a final rule with the effective date shown above. Because the final rule is an administrative action to update addresses for certain agency offices, FDA has determined that it has no substantive impact on the public. It imposes no costs, and merely updates a list of addresses included in the Code of Federal Regulations (CFR) for the convenience of the public. FDA, therefore, for good cause, finds under 5 U.S.C. 553(b)(3)(B) and (d)(3) that notice and public comment are unnecessary and that this rule may take effect upon publication.

List of Subjects

21 CFR Part 803

Imports, Medical devices, Recordkeeping requirements.

21 CFR Part 807

Confidential business information, Imports, Medical devices, Reporting and recordkeeping requirements.

21 CFR Part 812

Health records, Medical devices, Medical research, Reporting and recordkeeping requirements.

21 CFR Part 814

Administrative practice and procedure, Confidential business information, Medical devices, Medical research, Reporting and recordkeeping requirements.

21 CFR Part 860

Administrative practice and procedure, Medical devices.

21 CFR Part 1005

Administrative practice and procedure, Electronic products, Imports, Radiation protection, Surety bonds.

21 CFR Part 1010

Administrative practice and procedure, Electronic products, Exports, Radiation protection.

21 CFR Part 1020

Electronic products, Medical devices, Radiation protection, Reporting and recordkeeping requirements, Television, X-rays.

21 CFR 1040

Electronic products, Labeling, Lasers, Medical devices, Radiation protection, Reporting and recordkeeping requirements.

Therefore, under the Federal Food, Drug, and Cosmetic Act, and under authority delegated to the Commissioner of Food and Drugs, 21 CFR parts 803, 807, 812, 814, 860, 1005, 1010, 1020, and 1040 are amended as follows:

PART 803—MEDICAL DEVICE REPORTING

1. The authority citation for 21 CFR part 803 continues to read as follows:

Authority: 21 U.S.C. 352, 360, 360i, 360j, 371, 374.

2. Section 803.11 is revised to read as follows:

§ 803.11 Obtaining the forms.

User facilities and manufacturers must submit all reports of individual adverse events on FDA Form 3500A (MEDWATCH form) or in an electronic equivalent as approved under § 803.14. This form and all other forms referenced in this section can also be obtained from the Consolidated Forms and Publications Office, Washington

Commerce Center, 3222 Hubbard Rd., Landover, MD 20875; from the Food and Drug Administration, MEDWATCH (HF–2), 5600 Fishers Lane, Rockville, MD 20857, 301–827–7240; from the Division of Small Manufacturers Assistance, Office of Health and Industry Programs, Center for Devices and Radiological Health (HFZ–220), 1350 Piccard Dr. Rockville, MD 20850, FAX 301–443–8818; or from http://www.fda.gov/opacom/morechoices/fdaforms/cdrh.html on the Internet.

PART 807—ESTABLISHMENT REGISTRATION AND DEVICE LISTING FOR MANUFACTURERS AND INITIAL IMPORTERS OF DEVICES

3. The authority citation for 21 CFR part 807 continues to read as follows:

Authority: 21 U.S.C. 331, 351, 352, 360, 360c, 360e, 360i, 360j, 371, 374.

4. Section 807.90 is amended by revising paragraphs (a)(1) and (a)(2) to read as follows:

§ 807.90 Format of a premarket notification submission.

* * * * *

(a)(1) For devices regulated by the Center for Devices and Radiological Health, be addressed to the Food and Drug Administration, Center for Devices and Radiological Health (HFZ–401), 9200 Corporate Blvd., Rockville, MD 20850.

(2) For devices regulated by the Center for Biologics Evaluation and Research, be addressed to the Food and Drug Administration, Center for Biologics Evaluation and Research, Document Control Room (HFM–99), 1401 Rockville Pike, Rockville, MD 20852–1448. Information about devices regulated by the Center for Biologics Evaluation and Research is available at http://www.fda.gov/cber/dap/devlst.htm on the Internet.

* * * * *

PART 812—INVESTIGATIONAL DEVICE EXEMPTIONS

5. The authority citation for 21 CFR part 812 continues to read as follows:

Authority: 21 U.S.C. 331, 351, 352, 353, 355, 360, 360c–360f, 360h–360j, 371, 372, 374, 379e, 381, 382, 383; 42 U.S.C. 216, 241, 262, 263b–263n.

6. Section 812.19 is revised to read as follows:

§ 812.19 Address for IDE correspondence.

If you are sending an application, supplemental application, report, request for waiver, request for import or export approval, or other correspondence relating to matters covered by this part, you must address it to the Center for Devices and Radiological Health, Document Mail Center (HFZ–401), Food and Drug Administration, 9200 Corporate Blvd., Rockville, MD 20850. You must state on the outside wrapper of each submission what the submission is, for example, an ''IDE application,'' a ''supplemental IDE application,'' or a ''correspondence concerning an IDE (or an IDE application).''

PART 814—PREMARKET APPROVAL OF MEDICAL DEVICES

7. The authority citation for 21 CFR part 814 continues to read as follows:

Authority: 21 U.S.C. 351, 352, 353, 360, 360c–360j, 371, 372, 373, 374, 375, 379, 379e, 381.

8. Section 814.20 is amended by revising paragraphs (g) and (h) to read as follows:

§ 814.20 Application.

* * * * *

(g) FDA has issued a PMA guideline to assist the applicant in the arrangement and content of a PMA. This guideline is available upon request from the Center for Devices and Radiological Health, Division of Small Manufacturers Assistance (HFZ–220), 1350 Piccard Dr. Rockville, MD 20850, FAX 301–443–8818.

(h) If you are sending a PMA, PMA amendment, PMA supplement, or correspondence with respect to a PMA, you must send it to the Document Mail Center (HFZ–401), Center for Devices and Radiological Health, Food and Drug Administration, 9200 Corporate Blvd., Rockville, MD 20850.

PART 860—MEDICAL DEVICE CLASSIFICATION PROCEDURES

9. The authority citation for 21 CFR part 860 continues to read as follows:

Authority: 21 U.S.C. 360c, 360d, 360e, 360i, 360j, 371, 374.

10. Section 860.123 is amended by revising paragraph (b)(1) to read as follows:

§ 860.123 Reclassification petition: Content and form.

* * * * *

(b) * * *

(1) Addressed to the Food and Drug Administration, Center for Devices and Radiological Health, Regulations Staff (HFZ–215), 1350 Piccard Dr., Rockville, MD 20850;

* * * * *

PART 1005—IMPORTATION OF ELECTRONIC PRODUCTS

11. The authority citation for 21 CFR part 1005 continues to read as follows:

Authority: 42 U.S.C. 263d, 263h.

12. Section 1005.25 is amended by revising paragraph (b) to read as follows:

§ 1005.25 Service of process on manufacturers.

* * * * *

(b) A manufacturer designating an agent must address the designation to the Center for Devices and Radiological Health, 9200 Corporate Blvd., Rockville, MD 20850. It must be in writing and dated; all signatures must be in ink. The designation must be made in the legal form required to make it valid and binding on the manufacturer under the laws, corporate bylaws, or other requirements governing the making of the designation by the manufacturer at the place and time where it is made, and the persons or person signing the designation shall certify that it is so made. The designation must disclose the manufacturer's full legal name and the name(s) under which the manufacturer conducts the business, if applicable, the principal place of business, and mailing address. If any of the products of the manufacturer do not bear his legal name, the designation must identify the marks, trade names, or other designations of origin which these products bear. The designation must provide that it will remain in effect until withdrawn or replaced by the manufacturer and shall bear a declaration of acceptance duly signed by the designated agent. The full legal name and mailing address of the agent must be stated. Until rejected by the Secretary, designations are binding on the manufacturer even when not in compliance with all the requirements of this section. The designated agent may not assign performance of his function under the designation to another.

* * * * *

PART 1010—PERFORMANCE STANDARDS FOR ELECTRONIC PRODUCTS: GENERAL

13. The authority citation for 21 CFR part 1010 continues to read as follows:

Authority: 21 U.S.C. 351, 352, 360, 360e–360j, 371, 381; 42 U.S.C. 263b–263n.

14. Section 1010.4 is amended by revising paragraph (b) to read as follows:

§ 1010.4 Variances.

* * * * *

(b) *Applications for variances.* If you are submitting an application for variances or for amendments or

extensions thereof, you must submit an original and two copies to the Dockets Management Branch (HFA–305), Food and Drug Administration, 5630 Fishers Lane, rm. 1061, Rockville, MD 20852.

* * * * *

15. Section 1010.5 is amended by revising paragraph (c) to read as follows:

§ 1010.5 Exemptions for products intended for United States Government use.

* * * * *

(c) *Application for exemption.* If you are submitting an application for exemption, or for amendment or extension thereof, you must submit an original and two copies to the Dockets Management Branch (HFA–305), Food and Drug Administration, 5630 Fishers Lane, rm. 1061, Rockville, MD 20852. For an exemption under the criteria prescribed in paragraph (a)(1) of this section, the application shall include the information prescribed in paragraphs (c)(1) through (c)(13) of this section. For an exemption under the criteria prescribed in paragraph (a)(2) of this section, the application shall include the information prescribed in paragraphs (c)(3) through (c)(13) of this section. An application for exemption, or for amendment or extension thereof, and correspondence relating to such application shall be made available for public disclosure in the Dockets Management Branch, except for confidential or proprietary information submitted in accordance with part 20 of this chapter. Information classified for reasons of national security shall not be included in the application. Except as indicated in this paragraph, the application for exemption shall include the following:

* * * * *

PART 1020—PERFORMANCE STANDARDS FOR IONIZING RADIATION EMITTING PRODUCTS

16. The authority citation for 21 CFR part 1020 continues to read as follows:

Authority: 21 U.S.C. 351, 352, 360e–360j, 360gg–360ss, 371, 381.

17. Section 1020.30 is amended by revising paragraph (d)(1) to read as follows:

§ 1020.30 Diagnostic x-ray systems and their major components.

* * * * *

(d) * * *

(1) *Reports of assembly.* All assemblers who install certified components shall file a report of assembly, except as specified in paragraph (d)(2) of this section. The report will be construed as the assembler's certification and identification under §§ 1010.2 and 1010.3 of this chapter. The assembler shall affirm in the report that the manufacturer's instructions were followed in the assembly or that the certified components as assembled into the system meet all applicable requirements of §§ 1020.30 through 1020.33. All assembler reports must be on a form prescribed by and available from the Director, Center for Devices and Radiological Health, 9200 Corporate Blvd., Rockville, MD 20850. Completed reports must be submitted to the Director, the purchaser, and, where applicable, to the State agency responsible for radiation protection within 15 days following completion of the assembly.

* * * * *

PART 1040—PERFORMANCE STANDARDS FOR LIGHT–EMITTING PRODUCTS

18. The authority citation for 21 CFR part 1040 continues to read as follows:

Authority: 21 U.S.C. 351, 352, 360, 360e–360j, 371, 381; 42 U.S.C. 263b–263n.

19. Section 1040.10 is amended by revising paragraph (a)(3)(i) to read as follows:

§ 1040.10 Laser products.

(a) * * *

(3) * * *

(i) Registers, and provides a listing by type of such laser products manufactured that includes the product name, model number, and laser medium or emitted wavelength(s), and the name and address of the manufacturer. The manufacturer must submit the registration and listing to the Director, Office of Compliance (HFZ–300), Center for Devices and Radiological Health, 2094 Gaither Rd., Rockville, MD 20850.

* * * * *

Dated: March 22, 2000.

Linda S. Kahan,

Deputy Director for Regulations Policy, Center for Devices and Radiological Health.

[FR Doc. 00–8038 Filed 3–30–00; 8:45 am]

BILLING CODE 4160–01–F

DEPARTMENT OF HEALTH AND HUMAN SERVICES

Food and Drug Administration

21 CFR Parts 864, 866, 870, 872, 874, 876, 878, 884, 886, and 888

[Docket No. 99N–0035]

Medical Devices; Reclassification of 28 Preamendments Class III Devices into Class II

AGENCY: Food and Drug Administration, HHS.

ACTION: Final rule.

SUMMARY: The Food and Drug Administration (FDA) is reclassifying 28 preamendments devices from class III (premarket approval) into class II (special controls). FDA is also identifying the special controls that the agency believes will reasonably ensure the safety and effectiveness of the devices. This reclassification is being undertaken on the agency's own initiative based on new information under the Federal Food, Drug, and Cosmetic Act (the act), as amended by the Safe Medical Devices Act of 1990 and the FDA Modernization Act of 1997. The agency is also revising the identification of six of the devices subject to this rule to more accurately reflect the characteristics of devices actually being marketed. FDA is withholding action on 11 devices, which the agency proposed to reclassify, pending further action.

DATES: This rule is effective May 1, 2000.

FOR FURTHER INFORMATION CONTACT: Janet L. Scudiero, Center for Devices and Radiological Health (HFZ–410), Food and Drug Administration, 9200 Corporate Blvd., Rockville, MD 20850, 301–594–1184.

SUPPLEMENTARY INFORMATION:

I. Background

In the **Federal Register** of March 15, 1999 (64 FR 12774), FDA published a proposed rule to reclassify 38 preamendments class III devices into class II and to establish special controls for these devices. FDA invited interested persons to comment on the proposed rule by June 14, 1999.

FDA received one request to reopen the comment period for six devices. The request noted that FDA had not made the guidance documents that were proposed as special controls for these six devices available for comment through FDA's Good Guidance Practices (GGP's). The request further said that it was impossible to comment on the

proposed reclassification without the guidance documents being available. Therefore, the requestor asked that FDA extend the comment period until at least 90 days after the guidance documents are publicly available.

FDA agrees with the request. FDA has also identified an additional three devices for which FDA had not issued the guidance documents proposed as special controls in accordance with the GGP policy. Therefore, FDA is withholding action on the devices listed in table 1 of this document at this time. FDA will make the guidance documents for these devices available for comment through the GGP process and will reopen the comment period on the reclassification of these devices when the guidance documents are available.

FDA also received a request for an extension of the comment period for the cutaneous oxygen monitor (§ 868.2500 (21 CFR 868.2500)) on behalf of a foreign manufacturer. The manufacturer needed additional time to translate the proposed special controls documents to prepare their comments. FDA granted this request and will withhold action on this device and reopen the comment period.

TABLE 1.—DEVICES NOT SUBJECT OF THIS RECLASSIFICATION

21 CFR Section	Device Name
868.1150	Indwelling blood carbon dioxide partial pressure (Pco^2) analyzer
868.1170	Indwelling blood hydrogen ion concentration (pH) analyzer
868.1200	Indwelling blood oxygen partial pressure (Po^2) analyzer
868.2500	Cutaneous oxygen monitor
870.3450	Vascular graft prosthesis of less than 6 millimeters diameter
870.3620	Pacemaker lead adaptor
870.3800	Annuloplasty ring
870.4230	Cardiopulmonary bypass defoamer
870.4260	Cardiopulmonary bypass arterial blood line filter
870.4350	Cardiopulmonary bypass oxygenator

II. Comments

FDA received five comments on the proposal. The following is a summary of the comments and FDA's response:

(Comment 1) One comment supported the proposal to reclassify four orthopedic devices: The elbow joint metal/polymer constrained cemented prosthesis (§ 888.3150 (21 CFR 888.3150)), the knee joint patellofemoral polymer/metal semi-constrained cemented prosthesis (§ 888.3540 (21 CFR 888.3540)), the shoulder joint metal/polymer non-constrained cemented prosthesis (§ 888.3650 (21 CFR 888.3650)), and the shoulder joint metal/polymer semi-constrained cemented prosthesis (§ 888.3660 (21 CFR 888.3660)).

FDA agrees with this comment.

(Comment 2) One comment supported the proposed reclassification and special controls for the tinnitus masker (§ 874.3400 (21 CFR 874.3400)).

FDA agrees with this comment.

(Comment 3) A third comment addressed the vascular graft prosthesis of less than 6 millimeters diameter (§ 870.3450).

As noted above, FDA is withholding action on this device, until the proposed guidance document intended to be a special control is made available for comment. FDA will address this comment when it takes final action on this device.

(Comment 4) One manufacturer agreed with the proposal to reclassify the over-the-counter (OTC) denture cushion or pad (§ 872.3540 (21 CFR 872.3540)) but recommended that it be reclassified from class III into class I. The manufacturer submitted data on the device to support the claim that general controls are adequate to provide reasonable assurance of the safety and effectiveness of the device. The comment agreed that proper labeling is important to control risks to health associated with the use of this device.

FDA disagrees with this comment. FDA believes it is necessary that consumers have appropriate directions for use to correctly prepare denture material for a properly fitted denture. The guidance document describes the information necessary to provide reasonable assurance of the safe and effective use of the OTC dental pad or cushion. In particular, it includes descriptive information on the indications for use, contraindications, cautions, and potential adverse effects for the device, as well as the directions for use information regarding adequate mixing, preparation, and use of the product. The guidance document also provides ways that a manufacturer can establish that there is reasonable assurance that an OTC denture cushion or pad with a new intended use, chemical composition, labeling claims, or method of preparation is safe and effective.

(Comment 5) One comment raised three issues concerning the proposed reclassification of the high permeability hemodialysis system (§ 876.5860 (21 CFR 876.5860)) as follows:

1. The comment recommended changing the name and the section heading of § 876.5860 to include three additional therapies: Hemofiltration, hemoconcentration, and hemodiafiltration.

FDA notes that it has cleared these three additional renal therapies identified by the comment under § 876.5860. FDA will not revise the name of the device but it will revise the first sentence of the identification section (§ 876.5860(a)) as follows: ''A high permeability hemodialysis system is a device intended for use as an artificial kidney system for treatment of patients with renal failure, fluid overload, or toxemic conditions by performing such therapies as hemodialysis, hemofiltration, hemoconcentration, and hemodiafiltration.''

2. The comment also recommended further revising the identification of the high permeability hemodialysis system to state that the hemofiltration, hemoconcentration, and hemodiafiltration ultrafiltration coeficient (K_{uf}) should be changed from ''greater than 12 ml/hr/mmHg'' to ''greater than 8 ml/hr/mmHg''.

FDA agrees with the comment with the provision that the bovine or expired human blood be used to measure the K_{uf}. In the final rule, § 876.5860(a)(1) is revised to read:

The hemodialyzer consists of a semipermeable membrane with an *in vitro* ultrafiltration coefficient (K_{uf}) greater than 8 milliliters per hour per conventional millimeter of mercury, as measured with bovine or expired human blood, and is used with either an automated ultrafiltration controller or another method of ultrafiltration control to prevent fluid imbalance.

3. The comment also recommended that any revisions to the hemodialysis-related guidance documents be implemented as Level 1 guidance documents under FDA's GGP's.

FDA will follow its GGP's in issuing revisions to guidance documents used as special controls for this device as well as for all devices.

(Comment 6) FDA also made the following changes on its own initiative for accuracy and clarity:

1. FDA incorrectly cited the title of its biocompatibility guidance and is correcting the title of the guidance to read, ''Use of International Standard ISO 10993 'Biological Evaluation of Medical Devices Part I: Evaluation and Testing'.''

The special control is the FDA guidance document and not the ISO consensus standard itself.

2. In § 874.3930—*Tympanostomy tube with semipermeable membrane* (21 CFR 874.3930), FDA deleted the proposed special controls except the device specific guidance document. FDA believes that the guidance document adequately addresses the other proposed special controls.

3. In § 876.4480—*Electrohydraulic lithotriptor* (21 CFR 876.4480), FDA deleted the proposed special controls except the device specific FDA guidance document. FDA believes that the guidance document adequately addresses the other proposed special controls.

4. In § 876.5860—*High permeability hemodialysis system*, FDA deleted the American National Standards Institute (ANSI)/Association for the Advancement in Medical Instrumentation (AAMI) and United States Pharmacopeia (USP) standards because FDA believes that these standards are adequately addressed in the FDA sterility guidance.

5. In § 884.1060—*Endometrial aspirator* (21 CFR 884.1060); 21 CFR 884.1110—*Endometrial brush*; and § 884.1185—*Endometrial washer* (21 CFR 884.1185), FDA clarified the wording of the labeling and design and testing special controls.

6. In § 884.4100—*Endoscopic electrocautery and accessories* (21 CFR 884.4100), and § 884.4150—*Bipolar endoscopic coagulator-cutter and accessories* (21 CFR 884.4150), FDA added the complete titles and years of the standards and clarified the labeling and treatment instructions. In the preamble to the proposed rule, FDA identified the sterility guidance as a special control for these two devices but did not include it in the regulatory text. FDA has included the sterility guidance in the regulatory text of the final rule.

7. In some device identifications, FDA made minor editorial changes.

III. FDA's Conclusion

FDA has concluded, based on a review of the available information, that the special controls identified in tables 2 and 3 of this document provide reasonable assurance of the safety and effectiveness of these 28 devices. The two tables summarize the special controls to be applied to each device.

TABLE 2.—SUMMARY OF FDA GUIDANCE SPECIAL CONTROLS LISTED BY DEVICE

21 CFR Section	Device Name	FDA Sterility Review Guidance[1]	FDA Biocompatibility Guidance[2]	Other FDA Guidance
864.7250	Erythropoietin Assay			3
864.7300	Fibrin monomer paracoagulation test			4
870.3375	Cardiovascular intravascular filter	X	X	5
872.3540	OTC denture cushion or pad		X	6
872.3560	OTC denture reliner		X	6
872.3570	OTC denture repair kit		X	6
872.3600	Partially fabricated denture kit		X	6
874.3930	Tympanostomy tube with semipermeable membrane			7
876.4480	Electrohydraulic lithotriptor			8
876.5860	High permeability hemodialysis system		X	9,10,11,12
876.5955	Peritoneo-venous shunt	X	X	
878.3610	Esophageal prosthesis			13
878.3720	Tracheal prosthesis			13
884.1060	Endometrial aspirator	X	X	
884.1100	Endometrial brush	X	X	
884.1185	Endometrial washer	X	X	
884.4100	Endoscopic electrocautery and accessories	X	X	14
884.4150	Bipolar endoscopic coagulator-cutter	X	X	14
886.3400	Keratoprosthesis	X	X	15
886.3920	Eye valve implant	X	X	16
888.3150	Elbow joint metal/polymer constrained cemented prosthesis	X	X	17,18,19
888.3540	Knee joint patellofemoral polymer/metal semi-constrained cemented prosthesis	X	X	17,18,19
888.3650	Shoulder joint metal/polymer non-constrained cemented prosthesis	X	X	17,18,19
888.3660	Shoulder joint metal/polymer semi-constrained cemented prosthesis	X	X	17,18,19

(1) ''510(k) Sterility Review Guidance of 2/12/90 (K90–1)''
(2) ''Use of International Standard ISO 10993 'Biological Evaluation of Medical Devices Part I: Evaluation and Testing,' ''
(3) '' Document for Special Controls for Erythropoietin Assay Premarket Notification [510(k)s],''
(4) ''In Vitro Diagnostic Fibrin Monomer Paracoagulation Test, ''
(5) ''Guidance for Cardiovascular Intravascular Filters 510(k) Submissions,''
(6) ''OTC Denture Reliners, Repair Kits, and Partially Fabricated Denture Kits,''
(7) ''Tympanostomy Tubes, Submission Guidance for a 510(k) Premarket Notification,''
(8) ''Guidance for the Content of Premarket Notifications for Intracorporal Lithotripters,''

TABLE 2.—SUMMARY OF FDA GUIDANCE SPECIAL CONTROLS LISTED BY DEVICE

21 CFR Section	Device Name	FDA Sterility Review Guidance[1]	FDA Biocompatibility Guidance[2]	Other FDA Guidance

(9) ''Guidance for the Content of 510(k)s for Conventional and High Permeability Hemodialyzers,''
(10) ''Guidance for Industry and CDRH Reviewers on the Content of Premarket Notifications for Hemodialysis Delivery Systems,''
(11) ''Guidance for the Content of Premarket Notifications for Water Purification Components and Systems for Hemodialysis,''
(12) ''Guidance for Hemodialyzer Reuse Labeling,''
(13) ''Guidance for the Content of Premarket Notification Submissions for Esophageal and Tracheal Prostheses,
(14) ''Guidance ('Guidelines') for Evaluation of Laproscopic Bipolar and Thermal Coagulators (and Accessories),''
(15) ''Guidance on 510(k) Submissions for Keratoprosthesis,''
(16) ''Aqueous Shunt-510(k) Submissions,''
(17 ''Guidance Document for Testing Orthopedic Implants with Modified Metallic Surfaces Apposing Bone or Bone Cement,''
(18) ''Guidance Document for Testing Non-articulating, 'Mechanically Locked' Modular Implant Components,'' and
(19) ''Guidance Document for the Preparation of Premarket Notification [510(k)] Applications for Orthopedic Devices.''

TABLE 3.—OTHER SPECIAL CONTROLS LISTED BY DEVICE

21 CFR Section	Device Name	Labeling	Standards	Design and Performance Testing
866.3510	Rubella virus serological reagents		*NCCLS*[1] 1/LA6, October 1997, 1/LA18, December 1994, D13, October 1993, EP5, February 1999, EP10, May 1998. *CDC*[2] Low Titer Rubella Standard, Reference Panel of Well Characterized Rubella Sera. *WHO*[3] Rubella Standard.	
870.5550	External transcutaneous cardiac pacemaker (noninvasive)		*ANSI/AAMI*[4] DF–2	The maximum pulse amplitude should not exceed 200 mA. The maximum pulse duration should not exceed 50 msec.
872.6080	Airbrush		*IEC*[5] 60601–1–AM2 (1995–03), Amendment 2	
874.3400	Tinnitus masker	Patient labeling re: hearing health care professional diagnosis, fitting and followup care; risks; benefits; warnings; and specifications.		
876.5955	Peritoneo-venous shunt			Backflow specifications to prevent reflux of blood into the shunt.
884.1060	Endometrial aspirator	INDICATION: Only to evaluate the endometrium. CONTRAINDICATIONS: pregnancy, history of recent uterine perforation, and recent cesarean section.		Sampling component is covered within the vagina.
884.1100	Endometrial brush	INDICATION: Only to evaluate the endometrium. CONTRAINDICATIONS: Pregnancy, history of recent uterine perforation, and recent cesarean section.		Sampling component is covered within the vagina. Adherence of bristles and brush head.
884.1185	Endometrial washer	INDICATION: Only to evaluate the endometrium. CONTRAINDICATIONS: Pregnancy, history of recent uterine perforation, and recent cesarean section. Warning: Do not attach to wall or any external suction.		Maximum intrauterine pressure should not exceed 50 millimeters of mercury. Sampling component is covered within the vagina

TABLE 3.—OTHER SPECIAL CONTROLS LISTED BY DEVICE—Continued

21 CFR Section	Device Name	Labeling	Standards	Design and Performance Testing
884.4100	Endoscopic electrocautery and accessories	INDICATION: For female tubal sterilization. INSTRUCTIONS FOR USE: Destroy at least 2 cm of the fallopian tube; Use a cut (or undampened sinusoidal) wave form; and Use a minimum power of 25 watts. For devices with ammeters: continue electrode activation for 5 seconds after the visual endpoint (tissue blanching) is reached or current flow ceases indicating adequate tissue destruction.	*ANSI/AAMI* HF–18 *IEC* 60601–1–1–AM2 (1995–03) Amendment 2	
884.4150	Bipolar endoscopic coagulator-cutter	INDICATION: For female tubal sterilization. INSTRUCTIONS FOR USE: Destroy at least 2 cm of the fallopian tube; Use a cut (or undampened sinusoidal) wave form; and Use a minimum power of 25 watts. For devices with ammeters: continue electrode activation for 5 seconds after the visual endpoint (tissue blanching) is reached or current flow ceases indicating adequate tissue destruction.	*ANSI/AAMI* HF–18 *IEC* 60601–1–1–AM2 (1995–03) Amendment 2	
888.3150	Elbow joint metal/polymer constrained cemented prosthesis		*ASTM*[6] F 75–92, F 648–98, F 799–96, F 981–93, F 1044–95, F 1108–97, F 1147–95, F 1537–94. *ISO*[7] 5832–3,4, & 12:1996, 5833:1992, 5834–2;1998, 6018:1997, 9001:1994, 14630:1997.	
888.3540	Knee joint patellofemoral polymer/metal semi-constrained cemented prosthesis		*ASTM* F 75–92, F 648–98 F 799–96, F 1044–95 F 1108–97, F 1147–95, F 1537–94, F 1672–95. *ISO* 5832–3,4, & 12:1996, 5833:1992, 5834–2:1998, 6018:1987, 7207–2:1998, 9001:1994.	

TABLE 3.—OTHER SPECIAL CONTROLS LISTED BY DEVICE—Continued

21 CFR Section	Device Name	Labeling	Standards	Design and Performance Testing
888.3650	Shoulder joint metal/polymer non-constrained cemented prosthesis		*ASTM* F 75–92, F 648–98, F 799–96, F 1044–95, F 1108–97, F 1147–95; F–1378–97, F 1537–94. *ISO* 5832–3,4 & 12:1996, 5833:1992, 5834–2:1998, 6018:1987, 9001:1994.	
888.3660	Shoulder joint metal/polymer semi-constrained cemented prosthesis		*ASTM* F 75–92, F 648–98, F 799–96, F 1044–95, F 1108–97, F 1147–95; F 1378–97, F 1537–94. *ISO* 5832–3,4 & 12:1996, 5833:1992, 5834–2:1998, 6018:1987, 9001:1994.	

[1] National Committee for Clinical Laboratory Standards, 940 West Valley Rd., suite 1400, Wayne, PA 19087, 610–688–0100, http://www.nccls.org.
[2] Centers for Disease Control and Prevention, Mail Stop G18, 1600 Clifton Rd. NE., Atlanta, GA 30333.
[3] World Health Organization International Laboratory for Biological Standards, Statens Seruminstitut, Center for Prevention and Control of Infectious Diseases and Congenital Disorders, 5 Artillerivej, DK–2300 Copenhagen S, Denmark.
[4] American National Standards Institute and Association for the Advancement of Medical Instrumentation, 11 West 42d St., New York, NY 10036.
[5] International Electrotechnical Commission, AT3, Rue de Varembe, P.O. Box 131, Geneva, Switzerland CH–1211, http://www.iec.ch.
[6] American Society for Testing and Materials, Customer Services, 100 Barr Harbor Dr., West Conshohocken, PA 19428.
[7] International Organization for Standardization, Case Postale, Geneva, Switzerland CH–1121.

IV. Environmental Impact

The agency has determined under 21 CFR 25.34(b) that this classification action is of a type that does not individually or cumulatively have a significant effect on the human environment. Therefore, neither an environmental assessment nor an environmental impact statement is required.

V. Analysis of Impacts

FDA has examined the impacts of the rule under Executive Order 12866, and the Regulatory Flexibility Act (5 U.S.C 601–612) (as amended by subtitle D of the Small Business Regulatory Fairness Act of 1996 (Public Law 104–121), and the Unfunded Mandates Reform Act of 1995 (Public Law 104–4)). Executive Order 12866 directs agencies to assess all costs and benefits of available regulatory alternatives and, when regulation is necessary, to select regulatory approaches that maximize net benefits (including potential economic, environmental, public health and safety, and other advantages; distributive impacts; and equity). The agency believes that this rule is consistent with the regulatory philosophy and principles identified in the Executive Order. In addition, the final rule is not a significant regulatory action as defined by the Executive Order and so is not subject to review under the Executive Order.

The Regulatory Flexibility Act requires agencies to analyze regulatory options that would minimize any significant impact of a rule on small entities. Reclassification of these devices from class III will relieve all manufacturers of these devices of the cost of complying with the premarket approval requirements in section 515 of the act. Moreover, compliance with special controls proposed for these devices will not impose significant new costs on affected manufacturers as most of these devices already comply with the proposed special controls. Because reclassification will reduce regulatory costs with respect to these devices, it will impose no significant economic impact on any small entities, and it may permit small potential competitors to enter the marketplace by lowering their costs. The agency therefore certifies that this rule will not have a significant economic impact on a substantial number of small entities. In addition, this proposed rule will not impose costs of $100 million or more on either the private sector or State, local, and tribal governments in the aggregate, and therefore a summary statement of analysis under section 202(a) of the Unfunded Mandates Reform Act of 1995 is not required.

VI. Paperwork Reduction Act of 1995

FDA concludes that this proposed rule contains no collections of information. Therefore, clearance by the Office of Management and Budget under the Paperwork Reduction Act of 1995 is not required.

List of Subjects

21 CFR Part 864

Biologics, Blood, Laboratories, Medical devices, Packaging and containers.

21 CFR Part 866

Biologics, Laboratories, Medical devices.

21 CFR Parts 870, 872, 874, 876, 878, 884, and 888

Medical devices.

21 CFR Part 886

Medical devices, Ophthalmic goods and services.

Therefore, under the Federal Food, Drug, and Cosmetic Act and under authority delegated to the Commissioner of Food and Drugs, 21 CFR parts 864, 866, 870, 872, 874, 876, 878, 884, 886, and 888 are amended as follows:

PART 864—HEMATOLOGY AND PATHOLOGY DEVICES

1. The authority citation for 21 CFR part 864 continues to read as follows:

Authority: 21 U.S.C. 351, 360, 360c, 360e, 360j, 371.

2. Section 864.7250 is amended by revising paragraph (b) and by removing paragraph (c) to read as follows:

§ 864.7250 Erythropoietin assay.

* * * * *

(b) *Classification*. Class II. The special control for this device is FDA's ''Document for Special Controls for Erythropoietin Assay Premarket Notification (510(k)s).''

3. Section 864.7300 is amended by revising paragraph (b) and by removing paragraph (c) to read as follows:

§ 864.7300 Fibrin monomer paracoagulation test.

* * * * *

(b) *Classification*. Class II. The special control for this device is FDA's ''In Vitro Diagnostic Fibrin Monomer Paracoagulation Test.''

PART 866—IMMUNOLOGY AND MICROBIOLOGY DEVICES

4. The authority citation for 21 CFR part 866 continues to read as follows:

Authority: 21 U.S.C. 351, 360, 360c, 360e, 360j, 371.

5. Section 866.3510 is amended by revising paragraph (b) and by removing paragraph (c) to read as follows:

§ 866.3510 Rubella virus serological reagents.

* * * * *

(b) *Classification*. Class II. The special controls for this device are:

(1) National Committee for Clinical Laboratory Standards':

(i) 1/LA6 ''Detection and Quantitation of Rubella IgG Antibody: Evaluation and Performance Criteria for Multiple Component Test Products, Speciment Handling, and Use of the Test Products in the Clinical Laboratory, October 1997,''

(ii) 1/LA18 ''Specifications for Immunological Testing for Infectious Diseases, December 1994,''

(iii) D13 ''Agglutination Characteristics, Methodology, Limitations, and Clinical Validation, October 1993,''

(iv) EP5 ''Evaluation of Precision Performance of Clinical Chemistry Devices, February 1999,'' and

(v) EP10 ''Preliminary Evaluation of the Linearity of Quantitive Clinical Laboratory Methods, May 1998,''

(2) Centers for Disease Control's:

(i) Low Titer Rubella Standard,

(ii) Reference Panel of Well Characterized Rubella Sera, and

(3) World Health Organization's International Rubella Standard.

PART 870—CARDIOVASCULAR DEVICES

6. The authority citation for 21 CFR part 870 continues to read as follows:

Authority: 21 U.S.C. 351, 360, 360c, 360e, 360j, 371.

7. Section 870.3375 is amended by revising paragraph (b) and by removing paragraph (c) to read as follows:

§ 870.3375 Cardiovascular intravascular filter.

* * * * *

(b) *Classification*. Class II. The special controls for this device are:

(1) ''Use of International Standards Organization's ISO 10993 'Biological Evaluation of Medical Devices Part I: Evaluation and Testing,' '' and

(2) FDA's:

(i) ''510(k) Sterility Review Guidance and Revision of 2/12/90 (K90–1)'' and

(ii) ''Guidance for Cardiovascular Intravascular Filter 510(k) Submissions.''

8. Section 870.5550 is amended by revising paragraph (b) and by removing paragraph (c) to read as follows:

§ 870.5550 External transcutaneous cardiac pacemaker (noninvasive).

* * * * *

(b) *Classification*. Class II. The special controls for this device are:

(1) ''American National Standards Institute/American Association for Medical Instrumentation's DF–21 'Cardiac Defibrillator Devices' '' 2d ed., 1996, and

(2) ''The maximum pulse amplitude should not exceed 200 milliamperes. The maximum pulse duration should not exceed 50 milliseconds.''

PART 872—DENTAL DEVICES

9. The authority citation for 21 CFR part 872 continues to read as follows:

Authority: 21 U.S.C. 351, 360, 360c, 360e, 360j, 371.

10. Section 872.3540 is amended by revising paragraph (b)(2) and by removing paragraph (c) to read as follows:

§ 872.3540 OTC denture cushion or pad.

* * * * *

(b) * * *

(2) Class II if the OTC denture cushion or pad is made of a material other than wax-impregnated cotton cloth or if the intended use of the device differs from that described in paragraph (b)(1) of this section. The special controls for this device are FDA's:

(i) ''Use of International Standard ISO 10993 'Biological Evaluation of Medical—Devices Part I: Evaluation and Testing,' '' and

(ii) ''OTC Denture Reliners, Repair Kits, and Partially Fabricated Denture Kits.''

11. Section 872.3560 is amended by revising paragraph (b) and by removing paragraph (c) to read as follows:

§ 872.3560 OTC denture reliner.

* * * * *

(b) *Classification*. Class II. The special controls for this device are FDA's:

(1) ''Use of International Standard ISO 10993 'Biological Evaluation of Medical Devices—Part I: Evaluation and Testing,' '' and

(2) ''OTC Denture Reliners, Repair Kits, and Partially Fabricated Denture Kits.''

12. Section 872.3570 is amended by revising paragraph (b) and by removing paragraph (c) to read as follows:

§ 872.3570 OTC denture repair kit.

* * * * *

(b) *Classification*. Class II. The special controls for this device are FDA's:

(1) ''Use of International Standard ISO 10993 'Biological Evaluation of Medical Devices—Part I: Evaluation and Testing,' '' and

(2) ''OTC Denture Reliners, Repair Kits, and Partially Fabricated Denture Kits.''

13. Section 872.3600 is amended by revising paragraph (b) and by removing paragraph (c) to read as follows:

§ 872.3600 Partially fabricated denture kit.

* * * * *

(b) *Classification*. Class II. The special controls for this device are FDA's:

(1) ''Use of International Standard ISO 10993 'Biological Evaluation of Medical Devices—Part I: Evaluation and Testing,' '' and

(2) ''OTC Denture Reliners, Repair Kits, and Partially Fabricated Denture Kits.''

14. Section 872.6080 is amended by revising paragraph (b) and by removing paragraph (c) to read as follows:

§ 872.6080 Airbrush.

* * * * *

(b) *Classification*. Class II. The special control for this device is International Electrotechnical Commission's IEC 60601–1–AM2 (1995–03), Amendment 2, ''Medical Electrical Equipment—Part 1: General Requirements for Safety.''

PART 874—EAR, NOSE, AND THROAT DEVICES

15. The authority citation for 21 CFR part 874 continues to read as follows:

Authority: 21 U.S.C. 351, 360, 360c, 360e, 360j, 371.

16. Section 874.3400 is amended by revising paragraph (b) and by removing paragraph (c) to read as follows:

§ 874.3400 Tinnitus masker.

* * * * *

(b) *Classification*. Class II. The special control for this device is patient labeling regarding:

(1) Hearing health care professional diagnosis, fitting of the device, and followup care,

(2) Risks,

(3) Benefits,

(4) Warnings for safe use, and

(5) Specifications.

17. Section 874.3930 is amended by revising paragraph (b) and by removing paragraph (c) to read as follows:

§ 874.3930 Tympanostomy tube with semipermeable membrane.

* * * * *

(b) *Classification*. Class II. The special control for this device is FDA's ''Tympanostomy Tubes, Submission Guidance for a 510(k).''

PART 876—GASTROENTEROLOGY–UROLOGY DEVICES

18. The authority citation for 21 CFR part 876 continues to read as follows:

Authority: 21 U.S.C. 351, 360, 360c, 360e, 360j, 360l, 371.

19. Section 876.4480 is amended by revising paragraph (b) and by removing paragraph (c) to read as follows:

§ 876.4480 Electrohydraulic lithotriptor.

* * * * *

(b) *Classification*. Class II. The special control for this device is FDA's ''Guidance for the Content of Premarket Notifications for Intracorporeal Lithotripters.''

20. Section 876.5860 is revised to read as follows:

§ 876.5860 High permeability hemodialysis system.

(a) *Identification*. A high permeability hemodialysis system is a device intended for use as an artificial kidney system for the treatment of patients with renal failure, fluid overload, or toxemic conditions by performing such therapies as hemodialysis, hemofiltration, hemoconcentration, and hemodiafiltration. Using a hemodialyzer with a semipermeable membrane that is more permeable to water than the semipermeable membrane of the conventional hemodialysis system (§ 876.5820), the high permeability hemodialysis system removes toxins or excess fluid from the patient's blood using the principles of convection (via a high ultrafiltration rate) and/or diffusion (via a concentration gradient in dialysate). During treatment, blood is circulated from the patient through the hemodialyzer's blood compartment, while the dialysate solution flows countercurrent through the dialysate compartment. In this process, toxins and/or fluid are transferred across the membrane from the blood to the dialysate compartment. The hemodialysis delivery machine controls and monitors the parameters related to this processing, including the rate at which blood and dialysate are pumped through the system, and the rate at which fluid is removed from the patient. The high permeability hemodialysis system consists of the following devices:

(1) The hemodialyzer consists of a semipermeable membrane with an in vitro ultrafiltration coefficient (K_{uf}) greater than 8 milliliters per hour per conventional millimeter of mercury, as measured with bovine or expired human blood, and is used with either an automated ultrafiltration controller or anther method of ultrafiltration control to prevent fluid imbalance.

(2) The hemodialysis delivery machine is similar to the extracorporeal blood system and dialysate delivery system of the hemodialysis system and accessories (§ 876.5820), with the addition of an ultrafiltration controller and mechanisms that monitor and/or control such parameters as fluid balance, dialysate composition, and patient treatment parameters (e.g., blood pressure, hematocrit, urea, etc.).

(3) The high permeability hemodialysis system accessories include, but are not limited to, tubing lines and various treatment related monitors (e.g., dialysate pH, blood pressure, hematocrit, and blood recirculation monitors).

(b) *Classification*. Class II. The special controls for this device are FDA's:

(1) ''Use of International Standard ISO 10993 'Biological Evaluation of Medical Device—Part I: Evaluation and Testing,' ''

(2) ''Guidance for the Content of 510(k)s for Conventional and High Permeability Hemodialyzers,''

(3) ''Guidance for Industry and CDRH Reviewers on the Content of Premarket Notifications for Hemodialysis Delivery Systems,''

(4) ''Guidance for the Content of Premarket Notifications for Water Purification Components and Systems for Hemodialysis,'' and

(5) ''Guidance for Hemodialyzer Reuse Labeling.''

21. Section 876.5955 is amended by revising paragraph (b) and by removing paragraph (c) to read as follows:

§ 876.5955 Peritoneo-venous shunt.

* * * * *

(b) *Classification*. Class II. The special controls for this device are FDA's:

(1) ''Use of International Standard ISO 10993 'Biological Evaluation of Medical Devices—Part I: Evaluation and Testing,' ''

(2) ''510(k) Sterility Review Guidance of 2/12/90 (K90–1),'' and

(3) Backflow specification and testing to prevent reflux of blood into the shunt.

PART 878—GENERAL AND PLASTIC SURGERY DEVICES

22. The authority citation for 21 CFR part 878 continues to read as follows:

Authority: 21 U.S.C. 351, 360, 360c, 360e, 360j, 360l, 371.

23. Section 878.3610 is revised to read as follows:

§ 878.3610 Esophageal prosthesis.

(a) *Identification*. An esophageal prosthesis is a rigid, flexible, or expandable tubular device made of a plastic, metal, or polymeric material that is intended to be implanted to restore the structure and/or function of the esophagus. The metal esophageal prosthesis may be uncovered or covered with a polymeric material. This device may also include a device delivery system.

(b) *Classification*. Class II. The special control for this device is FDA's ''Guidance for the Content of Premarket Notification Submissions for Esophageal and Tracheal Prostheses.''

24. Section 878.3720 is revised to read as follows:

§ 878.3720 Tracheal prosthesis.

(a) *Identification.* The tracheal prosthesis is a rigid, flexible, or expandable tubular device made of a silicone, metal, or polymeric material that is intended to be implanted to restore the structure and/or function of the trachea or trachealbronchial tree. It may be unbranched or contain one or two branches. The metal tracheal prosthesis may be uncovered or covered with a polymeric material. This device may also include a device delivery system.

(b) *Classification.* Class II. The special control for this device is FDA's ''Guidance for the Content of Premarket Notification Submissions for Esophageal and Tracheal Prostheses.''

PART 884—OBSTETRICAL AND GYNECOLOGICAL DEVICES

25. The authority citation for 21 CFR part 884 continues to read as follows:

Authority: 21 U.S.C. 351, 360, 360c, 360e, 360j, 371.

26. Section 884.1060 is amended by revising paragraph (b) and by removing paragraph (c) to read as follows:

§ 884.1060 Endometrial aspirator.

* * * * *

(b) *Classification.* Class II. The special controls for this device are:

(1) FDA's:

(i) ''Use of International Standard ISO 10993 'Biological Evaluation of Medical Devices—Part I: Evaluation and Testing,' '' and

(ii) ''510(k) Sterility Review Guidance of 2/12/90 (K90–1),''

(2) Labeling:

(i) Indication: Only to evaluate the endometrium, and

(ii) Contraindications: Pregnancy, history of uterine perforation, or a recent cesarean section, and

(3) The sampling component is covered within vagina.

27. Section 884.1100 is amended by revising paragraph (b) and by removing paragraph (c) to read as follows:

§ 884.1100 Endometrial brush.

* * * * *

(b) *Classification.* Class II. The special controls for this device are:

(1) FDA's:

(i) ''Use of International Standard ISO 10993 'Biological Evaluation of Medical Devices—Part I: Evaluation and Testing,' '' and

(ii) ''510(k) Sterility Review Guidance of 2/12/90 (K90–1),''

(2) Labeling:

(i) Indication: Only to evaluate the endometrium, and

(ii) Contraindications: Pregnancy, history of uterine perforation, or a recent cesarean section, and

(3) Design and testing:

(i) The sampling component is covered within the vagina, and

(ii) For adherence of the bristles and brush head.

28. Section 884.1185 is amended by revising paragraph (b) and by removing paragraph (c) to read as follows:

§ 884.1185 Endometrial washer.

* * * * *

(b) *Classification.* Class II. The special controls for this device are:

(1) FDA's:

(i) ''Use of International Organization for Standardization's ISO 10993 'Biological Evaluation of Medical Devices—Part I: Evaluation and Testing,' '' and

(ii) ''510(k) Sterility Review Guidance of 2/12/90 (K90–1),''

(2) Labeling:

(i) Indication: Only to evaluate the endometrium,

(ii) Contraindications: Pregnancy, history of uterine perforation, or a recent cesarean section, and

(iii) Warning: Do not attach to a wall or any external suction, and

(3) Design and Testing:

(i) The sampling component is covered within the vagina, and

(ii) Intrauterine pressure should not exceed 50 millimeters of mercury.

29. Section 884.4100 is amended by revising paragraph (b) and by removing paragraph (c) to read as follows:

§ 884.4100 Endoscopic electrocautery and accessories.

* * * * *

(b) *Classification.* Class II. The special controls for this device are:

(1) FDA's:

(i) ''Use of International Standard ISO 10993 'Biological Evaluation of Medical Devices—Part I: Evaluation and Testing,' ''

(ii) ''510(k) Sterility Review Guidance 2/12/90 (K–90),'' and

(iii) ''Guidance ('Guidelines') for Evaluation of Laproscopic Bipolar and Thermal Coagulators (and Accessories),''

(2) International Electrotechnical Commission's IEC 60601–1–AM2 (1995–03), Amendment 2, ''Medical Electrical Equipment—Part 1: General Requirements for Safety,''

(3) American National Standards Institute/American Association for Medical Instrumentation's HF–18, 1993, ''Electrosurgical Devices,''

(4) Labeling:

(i) Indication: For female tubal sterilization, and

(ii) Instructions for use:

(A) Destroy at least 2 centimeters of the fallopian tubes,

(B) Use a cut or undampened sinusoidal waveform,

(C) Use a minimum power of 25 watts, and

(D) For devices with ammeters: continue electrode activation for 5 seconds after the visual endpoint (tissue blanching) is reached or current flow ceases indicating adequate tissue destruction.

30. Section 884.4150 is amended by revising paragraph (b) and by removing paragraph (c) to read as follows:

§ 884.4150 Bipolar endoscopic coagulator-cutter and accessories.

* * * * *

(b) *Classification.* Class II. The special controls for this device are:

(1) FDA's:

(i) ''Use of International Standard ISO 10993 'Biological Evaluation of Medical Devices—Part I: Evaluation and Testing,' ''

(ii) ''510(k) Sterility Review Guidance 2/12/90 (K–90),'' and

(iii) ''Guidance ('Guidelines') for Evaluation of Laproscopic Bipolar and Thermal Coagulators (and Accessories),''

(2) International Electrotechnical Commission's IEC 60601–1–AM2 (1995–03), Amendment 2, ''Medical Electrical Equipment—Part 1: General Requirements for Safety,''

(3) American National Standards Institute/American Association for Medical Instrumentation's HF–18, 1993, ''Electrosurgical Devices,''

(4) Labeling:

(i) Indication: For female tubal sterilization, and

(ii) Instructions for use:

(A) Destroy at least 2 centimeters of the fallopian tubes,

(B) Use a cut or undampened sinusoidal waveform,

(C) Use a minimum power of 25 watts, and

(D) For devices with ammeters: continue electrode activation for 5 seconds after the visual endpoint (tissue blanching) is reached or current flow ceases indicating adequate tissue destruction.

PART 886—OPHTHALMIC DEVICES

31. The authority citation for 21 CFR part 886 continues to read as follows:

Authority: 21 U.S.C. 351, 360, 360c, 360e, 360j, 371.

32. Section 886.3400 is revised to read as follows:

§ 886.3400 Keratoprosthesis.

(a) *Identification.* A keratoprosthesis is a device intended to provide a transparent optical pathway through an opacified cornea, either intraoperatively or permanently, in an eye that is not a reasonable candidate for a corneal transplant.

(b) *Classification.* Class II. The special controls for this device are FDA's:

(1) ''Use of International Standard ISO 10993 'Biological Evaluation of Medical Devices—Part I: Evaluation and Testing,' ''

(2) ''510(k) Sterility Review Guidance of 2/12/90 (K90–1),'' and

(3) ''Guidance on 510(k) Submissions for Keratoprostheses.''

33. Section 886.3920 is revised to read as follows:

§ 886.3920 Aqueous shunt.

(a) *Identification.* An aqueous shunt is an implantable device intended to reduce intraocular pressure in the anterior chamber of the eye in patients with neurovascular glaucoma or with glaucoma when medical and conventional surgical treatments have failed.

(b) *Classification.* Class II. The special controls for this device are FDA's:

(1) ''Use of International Standard ISO 10993 'Biological Evaluation of Medical Devices—Part I: Evaluation and Testing,' ''

(2) ''510(k) Sterility Review Guidance of 2/12/90 (K90–1),'' and

(3) ''Aqueous Shunts—510(k) Submissions.''

PART 888—ORTHOPEDIC DEVICES

34. The authority citation for 21 CFR part 888 continues to read as follows:

Authority: 21 U.S.C. 351, 360, 360c, 360e, 360j, 371.

35. Section 888.3150 is revised to read as follows:

§ 888.3150 Elbow joint metal/polymer constrained cemented prosthesis.

(a) *Identification.* An elbow joint metal/polymer constrained cemented prosthesis is a device intended to be implanted to replace an elbow joint. It is made of alloys, such as cobalt-chromium-molybdenum, or of these alloys and of an ultra-high molecular weight polyethylene bushing. The device prevents dislocation in more than one anatomic plane and consists of two components that are linked together. This generic type of device is limited to those prostheses intended for use with bone cement (§ 888.3027).

(b) *Classification.* Class II. The special controls for this device are:

(1) FDA's:

(i) ''Use of International Standard ISO 10993 'Biological Evaluation of Medical Devices—Part I: Evaluation and Testing, ' ''

(ii) ''510(k) Sterility Review Guidance of 2/12/90 (K90–1),''

(iii) ''Guidance Document for Testing Orthopedic Implants with Modified Metallic Surfaces Apposing Bone or Bone Cement,''

(iv) ''Guidance Document for the Preparation of Premarket Notification (510(k)) Application for Orthopedic Devices,''

(v) ''Guidance Document for Testing Non-articulating, 'Mechanically Locked' Modular Implant Components,''

(2) International Organization for Standardization's (ISO):

(i) ISO 5832–3:1996 ''Implants for Surgery—Metallic Materials—Part 3: Wrought Titanium 6-Aluminum 4-Vandium Alloy,''

(ii) ISO 5832–4:1996 ''Implants for Surgery—Metallic Materials—Part 4: Cobalt-Chromium-Molybdenum Casting Alloy,''

(iii) ISO 5832–12:1996 ''Implants for Surgery—Metallic Materials—Part 12: Wrought Cobalt-Chromium-Molybdenum Alloy,''

(iv) ISO 5833:1992 ''Implants for Surgery—Acrylic Resin Cements,''

(v) ISO 5834–2:1998 ''Implants for Surgery—Ultra High Molecular Weight Polyethylene—Part 2: Moulded Forms,''

(vi) ISO 6018:1987 ''Orthopaedic Implants—General Requirements for Marking, Packaging, and Labeling,''

(vii) ISO 9001:1994 ''Quality Systems—Model for Quality Assurance in Design/Development, Production, Installation, and Servicing,'' and

(viii) ISO 14630:1997 ''Non-active Surgical Implants—General Requirements,''

(3) American Society for Testing and Materials':

(i) F 75–92 ''Specification for Cast Cobalt-28 Chromium-6 Molybdenum Alloy for Surgical Implant Material,''

(ii) F 648–98 ''Specification for Ultra-High-Molecular-Weight Polyethylene Powder and Fabricated Form for Surgical Implants,''

(iii) F 799–96 ''Specification for Cobalt-28 Chromium-6 Molybdenum Alloy Forgings for Surgical Implants,''

(iv) F 981–93 ''Practice for Assessment of Compatibility of Biomaterials (Nonporous) for Surgical Implant with Respect to Effect of Material on Muscle and Bone,''

(v) F 1044–95 ''Test Method for Shear Testing of Porous Metal Coatings,''

(vi) F 1108–97 ''Specification for Titanium-6 Aluminum-4 Vanadium Alloy Castings for Surgical Implants,''

(vii) F 1147–95 ''Test Method for Tension Testing of Porous Metal Coatings, '' and

(viii) F 1537–94 ''Specification for Wrought Cobalt-28 Chromium-6 Molybdenum Alloy for Surgical Implants.''

36. Section 888.3540 is amended by revising paragraph (b) and by removing paragraph (c) to read as follows:

§ 888.3540 Knee joint patellofemoral polymer/metal semi-constrained cemented prosthesis.

* * * * *

(b) *Classification.* Class II. The special controls for this device are:

(1) FDA's:

(i) ''Use of International Standard ISO 10993 'Biological Evaluation of Medical Devices—Part I: Evaluation and Testing,''

(ii) ''510(k) Sterility Review Guidance of 2/12/90 (K90–1),''

(iii) ''Guidance Document for Testing Orthopedic Implants with Modified Metallic Surfaces Apposing Bone or Bone Cement,''

(iv) ''Guidance Document for the Preparation of Premarket Notification (510(k)) Applications for Orthopedic Devices,'' and

(v) ''Guidance Document for Testing Non-articulating, 'Mechanically Locked' Modular Implant Components,'' and

(2) International Organization for Standardization's (ISO):

(i) ISO 5832–3:1996 ''Implants for Surgery—Metallic Materials—Part 3: Wrought Titanium 6-Aluminum 4-Vandium Alloy,''

(ii) ISO 5832–4:1996 ''Implants for Surgery—Metallic Materials—Part 4: Cobalt-Chromium-Molybdenum Casting Alloy,''

(iii) ISO 5832–12:1996 ''Implants for Surgery—Metallic Materials—Part 12: Wrought Cobalt-Chromium-Molybdenum Alloy,''

(iv) ISO 5833:1992 ''Implants for Surgery—Acrylic Resin Cements,''

(v) ISO 5834–2:1998 ''Implants for Surgery—Ultra-high Molecular Weight Polyethylene—Part 2: Moulded Forms,''

(vi) ISO 6018:1987 ''Orthopaedic Implants—General Requirements for Marking, Packaging, and Labeling,''

(vii) ISO 7207–2:1998 ''Implants for Surgery—Components for Partial and Total Knee Joint Prostheses—Part 2: Articulating Surfaces Made of Metal, Ceramic and Plastic Materials,'' and

(viii) ISO 9001:1994 ''Quality Systems—Model for Quality Assurance in Design/Development, Production, Installation, and Servicing,'' and

(3) American Society for Testing and Materials':

(i) F 75–92 ''Specification for Cast Cobalt-28 Chromium-6 Molybdenum Alloy for Surgical Implant Material,''

(ii) F 648–98 ''Specification for Ultra-High-Molecular-Weight Polyethylene Powder and Fabricated Form for Surgical Implants,''

(iii) F 799–96 ''Specification for Cobalt-28 Chromium-6 Molybdenum Alloy Forgings for Surgical Implants,''

(iv) F 1044–95 ''Test Method for Shear Testing of Porous Metal Coatings,''

(v) F 1108–97 ''Titanium-6 Aluminum-4 Vanadium Alloy Castings for Surgical Implants,''

(vi) F 1147–95 ''Test Method for Tension Testing of Porous Metal Coatings,''

(vii) F 1537–94 ''Specification for Wrought Cobalt-28 Chromium-6 Molybdenum Alloy for Surgical Implants,'' and

(viii) F 1672–95 ''Specification for Resurfacing Patellar Prosthesis.''

37. Section 888.3650 is amended by revising paragraph (b) and by removing paragraph (c) to read as follows:

§ 888.3650 Shoulder joint metal/polymer non-constrained cemented prosthesis.

* * * * *

(b) *Classification.* Class II. The special controls for this device are:

(1) FDA's:

(i) ''Use of International Standard ISO 10993 'Biological Evaluation of Medical Devices—Part I: Evaluation and Testing,' ''

(ii) ''510(k) Sterility Review Guidance of 2/12/90 (K90–1),''

(iii) ''Guidance Document for Testing Orthopedic Implants with Modified Metallic Surfaces Apposing Bone or Bone Cement,''

(iv) ''Guidance Document for the Preparation of Premarket Notification (510(k)) Application for Orthopedic Devices,'' and

(v) ''Guidance Document for Testing Non-articulating, 'Mechanically Locked' Modular Implant Components,''

(2) International Organization for Standardization's (ISO):

(i) ISO 5832–3:1996 ''Implants for Surgery—Metallic Materials—Part 3: Wrought Titanium 6-Aluminum 4-Vandium Alloy,''

(ii) ISO 5832–4:1996 ''Implants for Surgery—Metallic Materials—Part 4: Cobalt-Chromium-Molybdenum Casting Alloy,''

(iii) ISO 5832–12:1996 ''Implants for Surgery—Metallic Materials—Part 12: Wrought Cobalt-Chromium-Molybdenum Alloy,''

(iv) ISO 5833:1992 ''Implants for Surgery—Acrylic Resin Cements,''

(v) ISO 5834–2:1998 ''Implants for Surgery—Ultra-high Molecular Weight Polyethylene—Part 2: Moulded Forms,''

(vi) ISO 6018:1987 ''Orthopaedic Implants—General Requirements for Marking, Packaging, and Labeling,'' and

(vii) ISO 9001:1994 ''Quality Systems—Model for Quality Assurance in Design/Development, Production, Installation, and Servicing,'' and

(3) American Society for Testing and Materials':

(i) F 75–92 ''Specification for Cast Cobalt-28 Chromium-6 Molybdenum Alloy for Surgical Implant Material,''

(ii) F 648–98 ''Specification for Ultra-High-Molecular-Weight Polyethylene Powder and Fabricated Form for Surgical Implants,''

(iii) F 799–96 ''Specification for Cobalt-28 Chromium-6 Molybdenum Alloy Forgings for Surgical Implants,''

(iv) F 1044–95 ''Test Method for Shear Testing of Porous Metal Coatings,''

(v) F 1108–97 ''Titanium-6 Aluminum-4 Vanadium Alloy Castings for Surgical Implants,''

(vi) F 1147–95 ''Test Method for Tension Testing of Porous Metal Coatings,''

(vii) F 1378–97 ''Specification for Shoulder Prosthesis,'' and

(viii) F 1537–94 ''Specification for Wrought Cobalt-28 Chromium-6 Molybdenum Alloy for Surgical Implants.''

38. Section 888.3660 is amended by revising paragraph (b) and by removing paragraph (c) to read as follows:

§ 888.3660 Shoulder joint metal/polymer semi-constrained cemented prosthesis.

* * * * *

(b) *Classification.* Class II. The special controls for this device are:

(1) FDA's:

(i) ''Use of International Standard ISO 10993 'Biological Evaluation of Medical Devices—Part I: Evaluation and Testing,' ''

(ii) ''510(k) Sterility Review Guidance of 2/12/90 (K90–1),''

(iii) ''Guidance Document for Testing Orthopedic Implants with Modified Metallic Surfaces Apposing Bone or Bone Cement,''

(iv) ''Guidance Document for the Preparation of Premarket Notification (510(k)) Application for Orthopedic Devices,'' and

(v) ''Guidance Document for Testing Non-articulating, 'Mechanically Locked' Modular Implant Components,''

(2) International Organization for Standardization's (ISO):

(i) ISO 5832–3:1996 ''Implants for Surgery—Metallic Materials—Part 3: Wrought Titanium 6-aluminum 4-vandium Alloy,''

(ii) ISO 5832–4:1996 ''Implants for Surgery—Metallic Materials—Part 4: Cobalt-chromium-molybdenum casting alloy,''

(iii) ISO 5832–12:1996 ''Implants for Surgery—Metallic Materials—Part 12: Wrought Cobalt-chromium-molybdenum alloy,''

(iv) ISO 5833:1992 ''Implants for Surgery—Acrylic Resin Cements,''

(v) ISO 5834–2:1998 ''Implants for Surgery—Ultra-high Molecular Weight Polyethylene—Part 2: Moulded Forms,''

(vi) ISO 6018:1987 ''Orthopaedic Implants—General Requirements for Marking, Packaging, and Labeling,'' and

(vii) ISO 9001:1994 ''Quality Systems—Model for Quality Assurance in Design/Development, Production, Installation, and Servicing,'' and

(3) American Society for Testing and Materials':

(i) F 75–92 ''Specification for Cast Cobalt-28 Chromium-6 Molybdenum Alloy for Surgical Implant Material,''

(ii) F 648–98 ''Specification for Ultra-High-Molecular-Weight Polyethylene Powder and Fabricated Form for Surgical Implants,''

(iii) F 799–96 ''Specification for Cobalt-28 Chromium-6 Molybdenum Alloy Forgings for Surgical Implants,''

(iv) F 1044–95 ''Test Method for Shear Testing of Porous Metal Coatings,''

(v) F 1108–97 ''Specification for Titanium-6 Aluminum-4 Vanadium Alloy Castings for Surgical Implants,''

(vi) F 1147–95 ''Test Method for Tension Testing of Porous Metal,''

(vii) F 1378–97 ''Standard Specification for Shoulder Prosthesis,'' and

(viii) F 1537–94 ''Specification for Wrought Cobalt-28 Chromium-6 Molybdenum Alloy for Surgical Implants.''

Dated: March 2, 2000.

Linda S. Kahan,

Deputy Director for Regulations Policy, Center for Devices and Radiological Health.

[FR Doc. 00–7779 Filed 3–30–00; 8:45 am]

BILLING CODE 4160–01–F

DEPARTMENT OF THE TREASURY

Internal Revenue Service

26 CFR Parts 1, 35 and 602

[TD 8873]

RIN 1545–AW78

New Technologies in Retirement Plans; Correction

AGENCY: Internal Revenue Service (IRS), Treasury.

ACTION: Correction to final regulations.

SUMMARY: This document contains corrections to final regulations which were published in the **Federal Register**

on Tuesday, February 8, 2000 (65 FR 6001), relating to amendments to the regulations governing certain notices and consents required in connection with distributions from retirement plans.

DATES: This correction is effective February 8, 2000.

FOR FURTHER INFORMATION CONTACT: Catherine Livingston Fernandez at (202) 622–6030 (not a toll-free number).

SUPPLEMENTARY INFORMATION:

Background

The final regulations that are subject to these corrections are under sections 402(f), 411(a)(11) and 3405(e)(10)(B) of the Internal Revenue Code.

Need for Correction

As published, the final regulations (TD 8873) contain errors that may prove to be misleading and are in need of clarification.

Correction of Publication

Accordingly, the publication of the final regulations (TD 8873), which were the subject of FR Doc. 00–1897, is corrected as follows:

1. On page 6004, column 2, line 24 from the top of the column, the language ''I.R.B.) provides that, pending'' is corrected to read ''I.R.B. 413) provides that, pending''.

§ 35.3405–1 [Corrected]

2. On page 6008, column 1, § 35.3405–1 d–35, lines 4 and 5 of A, the language, ''and the annual notice described in d–31) to a payee either on a written paper'' is corrected to read ''of § 35.3405–1T and the annual notice described in d–31 of § 35.3405–1T) to a payee either on a written paper''.

3. On page 6008, column 2, § 35.3405–1 d–36 A., the first line of *Example 5*, the language, ''*Example 5.* (I) Same facts as *Example 1*,'' is corrected to read ''*Example 5.* (i) Same facts as *Example 1*,''.

4. On page 6008, column 2, § 35.3405–1 d–36A., the first line of *Example 5* (ii), the language, ''(ii) In this *Example 5*, Plan A does not'' is corrected to read ''(ii) In this *Example 5*, the plan administrator does not''.

§ 602.101 [Corrected]

5. On page 6008, column 3, instructional Par. 7. and the table in § 602.101(b) are corrected to read as follows:

Par. 7. In § 602.101, paragraph (b) is amended by revising the entries for 1.402(f)–1 and 1.411(a)–11 in the table to read as follows:

§ 602.101 OMB Control numbers.

* * * * *

(b) * * *

CFR part or section where identified and described	Current OMB control No.
* * *	* *
1.402(f)–1	1545–1341 1545–1632
* * *	* *
1.411(a)–11	1545–1471 1545–1632
* * *	* *

Dale D. Goode,

Federal Register Liaison, Assistant Chief Counsel (Corporate).

[FR Doc. 00–5243 Filed 3–30–00; 8:45 am]

BILLING CODE 4830–01–P

DEPARTMENT OF THE TREASURY

Internal Revenue Service

26 CFR Parts 40, 41, 47, 48, 145, and 602

[TD 8879]

RIN 1545–AV71; RIN 1545–AT18

Kerosene Tax; Aviation Fuel Tax; Taxable Fuel Measurement and Reporting; Tax on Heavy Trucks and Trailers; Highway Vehicle Use Tax

AGENCY: Internal Revenue Service (IRS), Treasury.

ACTION: Final regulations; conforming amendments to temporary regulations; and removal of temporary regulations.

SUMMARY: This document contains final regulations relating to the kerosene and aviation fuel excise taxes, the tax on the use of certain highway vehicles, and the tax on the first retail sale of certain tractors and truck, trailer, and semitrailer chassis and bodies (highway vehicles). The regulations relating to kerosene affect the tax liability of certain refiners, terminal operators, and persons that sell, buy, or use kerosene. The regulations relating to aviation fuel affect certain producers and retailers of aviation fuel. The regulations relating to the taxes on highway vehicles affect vehicle manufacturers, dealers, and owners.

DATES: *Effective Dates:* These regulations are effective March 31, 2000.

Applicability Dates: For dates of applicability of these regulations, see §§ 48.4052–1(c), 48.4081–1(f), 48.4081–2(f), 48.4081–3(j), 48.4082–2(c), 48.4082–4(d), 48.4082–5(h), 48.4082–6(f), 48.4082–7(f), 48.4101–1(l), 48.4101–2(b), 48.6427–8(f), 48.6427–9(g), 48.6427–10(h), and 48.6427–11(g).

FOR FURTHER INFORMATION CONTACT: Frank Boland (202) 622–3130 (not a toll-free number).

SUPPLEMENTARY INFORMATION:

Paperwork Reduction Act

The collections of information in these final regulations have been reviewed in accordance with the Paperwork Reduction Act of 1995 (44 U.S.C. 3507(d)) and, pending receipt and evaluation of public comments, approved by the Office of Management and Budget under control number 1545–1418.

The collections of information in these regulations are in §§ 48.4052–1, 48.4081–2, 48.4081–3, 48.4081–7, 48.4082–2, 48.4082–6, 48.4082–7, 48.4091–3, 48.4101–1, 48.4101–2, 48.6427–8, 48.6427–9, 48.6427–10, and 48.6427–11. This information is required to support exempt transactions, claims for credits and refunds, and to inform consumers of the type of fuel that is being purchased. The likely respondents are businesses and other for-profit organizations.

Comments on the collections of information should be sent to the Office of Management and Budget, Attn: Desk Officer for the Department of the Treasury, Office of Information and Regulatory Affairs, Washington, DC 20503, with copies to the Internal Revenue Service, Attn: IRS Reports Clearance Officer, OP:FS:FP, Washington, DC 20224. Comments on the collections of information should be received by May 30, 2000. Comments are specifically requested concerning:

Whether the collections of information are necessary for the proper performance of the functions of the Internal Revenue Service, including whether the information will have practical utility;

The accuracy of the estimated burden associated with the collections of information (see below);

How the quality, utility, and clarity of the information to be collected may be enhanced;

How the burden of complying with the collections of information may be minimized, including through the application of automated collection techniques or other forms of information technology; and

Estimates of capital or start-up costs and costs of operation, maintenance, and purchase of service to provide information.

Estimated total annual reporting and/or recordkeeping burden: 97,583 hours.

The estimated annual burden per respondent is 17 minutes.

Estimated number of respondents: 346,080.

Estimated annual frequency of responses: On occasion.

An agency may not conduct or sponsor, and a person is not required to respond to, a collection of information unless the collection of information displays a valid control number assigned by the Office of Management and Budget.

Books or records relating to a collection of information must be retained as long as their contents may become material in the administration of any internal revenue law. Generally, tax returns and tax return information are confidential, as required by 26 U.S.C. 6103.

Background

Section 4081 imposes a tax on certain removals, entries, and sales of taxable fuel. Before July 1, 1998, taxable fuel meant gasoline and diesel fuel. As of that date, however, the definition of taxable fuel was expanded by the Taxpayer Relief Act of 1997 (Public Law 105–34, 111 Stat. 788 (the 1997 Act)) to include kerosene.

Temporary regulations (TD 8774) relating to this change were published in the **Federal Register** on July 1, 1998 (63 FR 35799) along with a notice of proposed rulemaking (REG–119227–97) cross-referencing the temporary regulations (63 FR 35893). Written comments responding to these proposed regulations were received and a public hearing was held on November 4, 1998.

Proposed regulations (REG–209753–95; PS–6–95)) were published in the **Federal Register** (61 FR 10490) on March 14, 1996, relating to, among other things, the measurement of taxable fuel. Written comments responding to these proposed regulations were received and a public hearing was held on June 20, 1996.

After consideration of written comments and comments made at the public hearings, the proposed regulations are adopted as revised by this Treasury decision. Comments and revisions are discussed below. Also, a partial withdrawal of the March 14, 1996, proposed regulations is published in the Proposed Rules section of this issue of the **Federal Register**.

Explanation of Provisions

Definition of Kerosene. The temporary regulations define kerosene as the two grades of kerosene (No. 1–K and No. 2–K) described in ASTM specification D 3699 and certain kerosene-type jet fuel. This ASTM specification describes kerosene in terms of several properties including distillation range, sulfur content, and color. For example, No. 1–K kerosene has a sulfur content not greater than 400 parts per million.

Several commentators noted, however, that there are many liquids that are never commercially known or sold as kerosene but that nevertheless might meet the broad specifications of ASTM specification D 3699. These liquids, which are used in the production of products such as paints and coatings, usually cost more to produce than kerosene that is sold for fuel uses. Because of these differences, the commentators concluded that it is highly unlikely that these liquids would be diverted for use in highway vehicles. Thus, the commentators suggested that these liquids should not be treated as kerosene.

The final regulations adopt the suggestion of the commentators by excluding liquids with certain described properties from the definition of kerosene.

Exemption for Aviation-grade Kerosene. The 1997 Act provides that undyed aviation-grade kerosene may be removed from a terminal tax free if the kerosene is received by a person that is registered for purposes of the aviation fuel tax imposed by section 4091. As a transitional rule, the temporary regulations provide that tax does not apply to a removal of aviation-grade kerosene that will be used as a fuel in an aircraft, even if the person receiving the kerosene is not registered.

The IRS Restructuring and Reform Act of 1998 (Public Law 105–206, 112 Stat. 685 (the 1998 Act)), which was enacted after publication of the temporary regulations, revised the exemption for aviation-grade kerosene. Under the 1998 Act, tax is not imposed on aviation-grade kerosene that the Secretary determines is destined for use as a fuel in an aircraft.

Under the final regulations, existing rules relating to tax-free transactions within the bulk transfer/terminal system will continue to apply to aviation-grade kerosene even if the kerosene will be used as a fuel in an aircraft. Thus, a sale of aviation-grade kerosene within a pipeline to an airline for aircraft use may be made tax free only if the airline is a taxable fuel registrant. In this regard, the final regulations also reflect Announcement 99–40 (1999–16 I.R.B. 10), which provides a transitional registration rule for certain throughputters and kerosene terminal operators.

Removals and entries of undyed aviation-grade kerosene may be made tax free under the final regulations if (1) the person otherwise liable for tax (such as the position holder) delivers the kerosene into the fuel supply tank of its own aircraft or (2) the kerosene is sold and the buyer certifies to the person otherwise liable for tax that the kerosene will be used by the buyer as a fuel in an aircraft or resold for such use. Any later sale of the aviation-grade kerosene will be subject to tax unless the subsequent seller receives a similar certificate from its buyer or delivers the kerosene into the fuel supply tank of the buyer's aircraft. In addition, the IRS may withdraw the right of a buyer to provide a certificate in the future if the buyer uses the aviation-grade kerosene other than as a fuel in an aircraft.

A commentator noted that airlines often use a small percentage of their purchases of aviation-grade kerosene as a fuel in airport ground equipment, thus making it impossible for them to certify that all of this fuel will be for aircraft use. The commentator suggested that a buyer should be allowed to certify that only a percentage of its purchases will be used as a fuel in an aircraft. The final regulations adopt this suggestion. Thus, if an airline certifies to a position holder that 99 percent of all of its purchases of aviation-grade kerosene from a certain terminal will be for use as a fuel in an aircraft, then the position holder will be liable for the section 4081 tax on one percent of all its sales to the airline at that terminal.

A commentator suggested that tax should not be imposed on the nonbulk removal of aviation-grade kerosene from an approved terminal if the kerosene is received at another approved terminal or is sold for use in an aircraft outside the United States. Under the final regulations, both removals may be made tax free if the proper certification regarding aircraft use is given by the buyer or the person otherwise liable for tax delivers the aviation-grade kerosene into the fuel supply tank of its own aircraft.

A commentator noted that aviation-grade kerosene is aviation fuel and thus is subject to tax under section 4091 when it is sold by its producer. Section 4092 exempts a sale from the aviation fuel tax if the buyer is a registered producer or certifies that it will use the fuel in a nontaxable use such as use other than as a fuel in an aircraft.

The commentator suggested that if the section 4081 tax is imposed on the removal of any aviation-grade kerosene because the buyer of the kerosene does not certify that it will be used in an aircraft, then an exemption from the section 4091 tax automatically should apply regardless of the status of the buyer. Thus, for example, if the section 4081 tax is imposed on a removal of aviation-grade kerosene at the terminal

rack, the section 4091 tax should not be imposed on any subsequent sale to an unregistered person that buys the kerosene for resale for nonaircraft use, such as in highway vehicles or as heating oil. The commentator contends that this suggestion would ease compliance and administrative burdens by eliminating the need to certify for section 4091 purposes.

The final regulations do not adopt this suggestion because section 4092 allows tax-free sales of aviation fuel only to registered producers and persons buying for their own nontaxable use. This suggestion, in contrast, would allow tax-free sales to resellers that are not producers. The IRS has published guidance regarding the aviation fuel tax imposed by section 4091 in Notice 88–30 (1988–1 C.B. 497), Notice 88-132 (1988–2 C.B. 552), and Notice 89–38 (1989–1 C.B. 678).

Exemption for Feedstock Purpose. Under the 1997 Act and the temporary regulations, tax is not imposed on undyed kerosene that is received from a pipeline or vessel by a registered person for the person's use as a feedstock; that is, use in the manufacture or production of any substance other than gasoline, diesel fuel, or special fuels referred to in section 4041.

The 1997 Act also provides that, to the extent provided in regulations, undyed kerosene may be removed from a terminal tax free if the kerosene is removed for use as a feedstock. The temporary regulations do not implement this latter provision. However, several commentators suggested that, without the application of this provision, small feedstock users that buy kerosene at a terminal rack bear the burden of the tax and then must claim a credit or refund. This puts the small users at a competitive disadvantage compared to larger users that may buy bulk quantities of kerosene tax free for their facilities that are connected to a pipeline.

The final regulations adopt the suggestion of the commentators by generally allowing tax-free removals of kerosene from a terminal if the person receiving the kerosene is registered and certifies that it will use the kerosene for a feedstock purpose. The IRS may revoke this person's registration if the person uses the kerosene other than for a feedstock purpose, such as to power machinery in a factory where paint is produced.

A commentator suggested that the packaging of kerosene into any container that is less than 55 gallons should be treated as a feedstock purpose. This suggestion is not adopted in the final regulations because this activity is not the manufacture or production of a nonfuel substance.

Exemption for Certain Wholesale Distributors. The 1997 Act provides that, to the extent provided in regulations, undyed kerosene may be removed from a terminal tax free if the kerosene is received by a registered wholesale distributor that sells kerosene exclusively to ultimate vendors that sell kerosene from a pump that is not suitable for use in fueling any diesel-powered highway vehicle or train (a blocked pump). The temporary regulations do not provide rules for this provision.

A commentator suggested that the final regulations should implement this provision because it would reduce the number of refund claims that are filed by ultimate vendors and reduce the costs of the fuel for these vendors, many of whom are small businesses. Another commentator suggested, on the other hand, that the provision would increase the availability of untaxed, undyed kerosene and thus increase opportunities for diversion of this fuel for taxable purposes.

The final regulations do not implement this provision because Treasury and the IRS share the concern of the latter commentator. Treasury and the IRS will, however, continue to monitor the matter to determine if it is appropriate to provide rules for the provision at a later date.

Claims Relating to Sales of Kerosene from Blocked Pumps. Under the 1997 Act, a credit or refund is allowed to a registered ultimate vendor that sells taxed, undyed kerosene from a blocked pump. The temporary regulations define a blocked pump as a retail fuel pump at a fixed location that is used to dispense undyed kerosene for use by the buyer in a nontaxable use and cannot be used to dispense kerosene directly into the fuel supply tank of a diesel-powered highway vehicle or train (because, for example, of its distance from a road surface or train track or the length of its delivery hose). In addition, blocked pumps must display a prescribed notice.

Treasury and the IRS received many comments relating to the definition of blocked pump. Several commentators noted that many kerosene pumps are on an island next to gasoline pumps so that vehicular access cannot be restricted. Requiring blocked pumps to be on a separate island would not be practical because many service stations do not have the physical space for such an arrangement. Shortening the delivery hose on these pumps would not be practical because doing so would prevent a container from resting on the ground while it is being filled, as safety rules require.

Several commentators suggested expanding the definition to include pumps that are activated by an on-site attendant before each use and are within the direct line of sight of the attendant authorizing the sale to the customer. Other commentators noted that many people who use kerosene for heating purposes do not buy it from a retail pump. So that these customers could obtain undyed kerosene at a tax-excluded price, these commentators suggested that a credit or refund should be allowed to registered ultimate vendors that make home deliveries of undyed kerosene for heating purposes and that sell kerosene in small containers.

Under the final regulations, a blocked pump is a pump that, because of the pump's physical limitations (for example, a short hose), cannot be used to fuel a vehicle, or a pump that is locked by the vendor after each sale and unlocked by the vendor in response to a request by a buyer for undyed kerosene for use other than as a fuel in a diesel-powered highway vehicle or train. As a condition to making a claim with regard to kerosene sold from this latter type of blocked pump, the vendor must obtain the name and address of anyone who buys more than five gallons of kerosene in a single sale. A vendor's registration may be revoked if it allows anyone to fuel a highway vehicle from a blocked pump.

There is no authority in the Internal Revenue Code (Code) to allow ultimate vendor refunds for kerosene solely because the kerosene is delivered to homes for heating purposes or is sold in small containers. Thus, the final regulations do not contain such a provision.

Claims Relating to Sales of Kerosene for Blending During Periods of Extreme Cold. The 1997 Act provides that, to the extent provided in regulations, a credit or refund is allowed to a registered ultimate vendor that sells kerosene for blending with heating oil to be used during periods of extreme or unseasonable cold. The temporary regulations do not provide rules for this provision.

A commentator suggested that the final regulations should implement this provision and define the phrase ''period of extreme or unseasonable cold'' as including ''all the days in November through February.''

Under the final regulations, if the IRS declares an area to be affected by extremely cold weather conditions, a credit or refund generally will be allowed to a registered ultimate vendor

that sells undyed kerosene for blending with diesel fuel in that affected area if the blended fuel is to be used for heating purposes. It is expected that the periods during which any declaration of extreme cold issued under this provision will be in effect will be limited.

Registration of Heavy Vehicle Manufacturers and Retailers. The tax on the sale of heavy vehicles imposed by section 4051 applies to the first retail sale by the manufacturer, importer, or retailer of a vehicle. The tax is not imposed if a vehicle is sold for resale or for leasing on a long-term basis. Under regulations issued in 1988, this tax-free treatment applied only if both the seller and the buyer were registered by the IRS. The 1997 Act provides, however, that the Secretary shall prescribe regulations so that sales between unregistered parties may be made tax-free if the buyer states under penalties of perjury that the vehicle will be resold. This provision of the 1997 Act is effective January 1, 1998. The temporary regulations implementing the provision are effective on July 1, 1998, the publication date of the temporary regulations.

Several commentators suggested that the final regulations should be effective on January 1, 1998, because the commentators believe that the 1997 Act eliminated the registration requirement as of that date.

The IRS and Treasury are concerned that the suggested change might disqualify sales that would have been tax free under the 1988 regulations. Accordingly, the final regulations retain the July 1, 1998, effective date. They provide, however, that sales (including sales between unregistered parties) that occurred after December 31, 1997, and before July 1, 1998, and otherwise satisfy the requirements of the final regulations may be made tax free.

Measurement of Taxable Fuel. Existing regulations provide that gallons of taxable fuel may be measured on the basis of actual volumetric gallons, gallons adjusted to 60 degrees Fahrenheit, or any other temperature adjustment method approved by the Commissioner.

The March 14, 1996, proposed regulations proposed to modify this rule so that taxable fuel would be measured on the basis of actual volumetric gallons or gallons adjusted to 60 degrees Fahrenheit, whichever is the basis for measurement under the position holder's terminaling agreement with the terminal operator. A commentator suggested that measurement at a particular terminal should be applied consistently on an annual basis.

Under the final regulations, annual consistency is required, on a terminal-by-terminal basis, within each one year period beginning on July 1. Thus, a position holder may use only one of the above described bases of measurement with respect to all taxable fuel removed from any particular terminal during each one year period.

Highway Use Tax. Section 4481 imposes a tax on the use of certain highway vehicles. A State to which an application is made to register a highway vehicle generally must receive from the applicant proof of payment of this tax. Proof of payment consists of a receipted Schedule 1 of Form 2290, ''Heavy Highway Vehicle Use Tax Return,'' that is returned to the taxpayer by the IRS after the taxpayer has paid tax on the vehicle. In most cases, the Schedule 1 must include the vehicle identification number (VIN) of each vehicle for which the taxpayer is reporting tax. However, existing regulations provide that a taxpayer reporting tax on more than 21 vehicles need not list the VIN of any vehicle.

Effective July 1, 2000, the final regulations remove this provision. In addition, the instructions for Form 2290 will be changed to require the listing of the VIN of each vehicle reported. The final regulations also remove several obsolete provisions relating to the highway use tax.

Information Reporting. Section 4101(d) allows the IRS to require information reporting by (1) any person registered under section 4101 and (2) such other persons as the IRS deems necessary to administer the taxes on taxable fuel and aviation fuel.

The IRS is developing an information reporting program (Excise Summary Terminal Activity Reporting System (ExSTARS)) for terminal operators and pipeline and vessel operators. The IRS anticipates that ExSTARS will begin later in 2000.

Under the final regulations, information reports to be required by the IRS under section 4101(d) will cover a one month period and a report will be due by the end of the month following the month to which it relates. As a transitional rule, reports under the new rules relating to any month in 2000 will not be due until February 28, 2001.

Registration of pipeline and vessel operators. Effective April 1, 2001, operators of pipelines and vessels in the bulk transfer/terminal system will be required to be registered by the IRS.

Effect on Other Documents

The following publications are obsolete as of March 31, 2000:

Rev. Rul. 57–259, 1957–1 C.B. 423.
Rev. Rul. 57–499, 1957–2 C.B. 788.
Rev. Rul. 73–292, 1973–2 C.B. 376.
Rev. Rul. 78–218, 1978–1 C.B. 367.
Rev. Rul. 86–62, 1986–1 C.B. 325.
Announcement 99–40, 1999–16 I.R.B. 10.

Special Analyses

It has been determined that this Treasury decision is not a significant regulatory action as defined in Executive Order 12866. Therefore, a regulatory assessment is not required. It also has been determined that section 553(b) of the Administrative Procedure Act (5 U.S.C. chapter 5) does not apply to these regulations.

It is hereby certified that the collection of information in these regulations will not have a significant economic impact on a substantial number of small entities. This certification is based upon the fact that the time required to prepare and submit the exemption certificates described in these regulations (many of which are similar to certificates that are already in use) is minimal and will not have a significant impact on those small entities that choose to provide the certificates. Therefore, a Regulatory Flexibility Analysis under the Regulatory Flexibility Act (5 U.S.C. chapter 6) is not required.

Pursuant to section 7805(f) of the Code, the notices of proposed rulemaking preceding these regulations were submitted to the Chief Counsel for Advocacy of the Small Business Administration for comment on their impact on small business.

Drafting Information: The principal author of these regulations is Frank Boland, Office of Assistant Chief Counsel (Passthroughs and Special Industries). However, other personnel from the IRS and Treasury Department participated in their development.

List of Subjects

26 CFR Parts 40, 48, and 145

Excise taxes, Reporting and recordkeeping requirements.

26 CFR Part 41

Excise taxes, Motor vehicles, Reporting and recordkeeping requirements.

26 CFR Part 47

Biologics, Excise taxes, Gasoline, Reporting and recordkeeping requirements.

26 CFR Part 602

Reporting and recordkeeping requirements.

Adoption of Amendments to the Regulations

Accordingly, and under the authority of 26 U.S.C. 7805, 26 CFR chapter I is amended as follows:

PART 40—EXCISE TAX PROCEDURAL REGULATIONS

Paragraph 1. The authority citation for part 40 continues to read in part as follows:

Authority: 26 U.S.C. 7805 * * *

§ 40.6011(a)–1 [Amended]

Par. 2. Section 40.6011(a)–1 is amended as follows:

1. In paragraph (b)(2) introductory text, the language ''Effective January 1, 1994, the'' is removed and ''The'' is added in its place.

2. In paragraph (b)(2)(v), the language ''and kerosene'' is added after ''diesel fuel''.

PART 41—EXCISE TAX ON USE OF CERTAIN HIGHWAY MOTOR VEHICLES

Par. 3. The authority citation for part 41 continues to read in part as follows:

Authority: 26 U.S.C. 7805 * * *

Par. 4. Section 41.0–1 is revised to read as follows:

§ 41.0–1 Introduction.

The regulations in this part are designated ''Highway Use Tax Regulations.'' The regulations in this part relate to the tax on the use of certain highway vehicles imposed by section 4481 and to certain associated administrative provisions.

§§ 41.0–2 and 41.0–3 [Removed]

Par. 5. Sections 41.0–2 and 41.0–3 are removed.

Par. 6. Section 41.4481–1 is amended as follows:

1. Paragraphs (a) and (b) are revised.

2. Paragraph (c)(1) introductory text, is amended by removing the language ''taxable periods beginning after June 30, 1984,'' and adding ''a taxable period'' in its place.

3. Paragraph (c)(3) is amended by revising the introductory text.

4. Paragraph (d)(1) is amended by removing from the last sentence the language ''Form 843 (Claim)'' and adding ''Form 8849 (or such other form as the Commissioner may designate)'' in its place.

5. Paragraph (e) introductory text, is amended by adding the language ''section 4481 and'' after ''The application of''.

The revisions read as follows:

§ 41.4481–1 Imposition of tax.

(a) *In general.* Tax is imposed on the use during a taxable period of any registered highway motor vehicle that (together with the semitrailers and trailers customarily used in connection with highway motor vehicles of the same type as such highway motor vehicle) has a taxable gross weight of at least 55,000 pounds.

(b) *Rate of tax.* For the rate of tax generally, see section 4481(a). For the rate of tax for certain vehicles used in logging, see section 4483(e). For the rate of tax for certain vehicles base-plated in Canada or Mexico, see section 4483(f). For a special rule for the taxable period in which the tax terminates, see section 4482(d).

(c) * * *

(3) If the taxable gross weight of a vehicle increases during the month in which the vehicle is first used in a taxable period, the tax for the vehicle for the taxable period is computed on the basis of the increased weight. If the taxable gross weight of a vehicle increases after the month in which the vehicle was first used in a taxable period, the additional tax liability, if any, that results from the increased weight is calculated according to the following formula:

* * * * *

§ 41.4481–1T [Removed]

Par. 7. Section 41.4481–1T is removed.

Par. 8. In § 41.4481–2, paragraph (a)(1) is revised to read as follows:

§ 41.4481–2 Persons liable for tax.

(a) * * * (1)(i) A person is liable for the tax imposed by section 4481 with respect to the use of a highway motor vehicle in a taxable period if the vehicle is registered in the person's name—

(A) At the time of the first use of the vehicle in the taxable period;

(B) In the case of a vehicle under a suspension of tax described in § 41.4483–3(a), at the time the use on the public highways during the taxable period exceeds 5,000 miles (7,500 miles for agricultural vehicles);

(C) At the time that an increase in the taxable gross weight of the vehicle results in an additional tax liability (as computed under § 41.4481–1(c)(3)) if the increase occurs after the month in which the vehicle was first used in the taxable period; or

(D) At the time of any use during the taxable period that is after the first use during the period, but only to the extent that the tax or any installment payment of the tax has not previously been paid.

(ii) In any case in which more than one person is liable for the tax for a taxable period, the liability of all persons is satisfied to the extent that the tax is paid by any person liable for the tax.

* * * * *

§ 41.4482(a)–1 [Amended]

Par. 9. Section 41.4482(a)–1 is amended as follows:

1. Paragraph (a)(2) is amended by removing the language ''paragraph (c) of this section'' and adding ''§ 48.4061(a)–1(d) of this chapter'' in its place.

2. Paragraph (c) is removed.

Par. 10. Section 41.4482(b)–1 is amended as follows:

1. Paragraph (a) is revised.

2. Paragraphs (b), (c), and (d) are removed.

3. Paragraph (e) is redesignated as paragraph (b) and amended as follows:

a. The heading is revised.

b. In newly designated paragraph (b)(1), the first sentence is revised and the second sentence is removed.

c. In newly designated paragraph (b)(2), the language ''paragraph (a)'' is removed and ''paragraph (b)(1)'' is added in its place.

4. Paragraph (f) is redesignated as paragraph (c).

5. The undesignated authority citation at the end of the section is removed.

The revisions read as follows:

§ 41.4482(b)–1 Definition of taxable gross weight.

(a) *Actual unloaded weight*—(1) *In general. Actual unloaded weight* means the empty (or tare) weight of the truck, truck-tractor, or bus, fully equipped for service.

(2) *Trucks and truck-tractors.* A truck or truck-tractor fully equipped for service includes the body (whether or not designed and adapted primarily for transporting cargo, as for example, concrete mixers); all accessories; all equipment attached to or carried on such truck or truck-tractor for use in connection with the movement of the vehicle by means of its own motor or for use in the maintenance of the vehicle; and a full complement of lubricants, fuel, and water. It does not include the driver, any equipment (not including the body) attached to or carried on the vehicle for use in handling, protecting, or preserving cargo, or any special equipment (such as an air compressor, crane, specialized oilfield machinery, etc.) mounted on the vehicle for use on construction jobs, in oilfield operations, etc.

(3) *Buses.* A bus fully equipped for service includes the body; all accessories; all equipment attached to or carried on such bus for use in connection with the movement of the

vehicle by means of its own motor, for use in the maintenance of the vehicle, or for the accommodation of passengers or others (such as air conditioning equipment and sanitation facilities, etc.); and a full complement of lubricants, fuel, and water. It does not include the driver.

(b) *Determination of taxable gross weight*—(1) *In general.* The taxable gross weight of a highway motor vehicle is the sum of the actual unloaded weight of the vehicle fully equipped for service, the actual unloaded weight of any semitrailers or trailers fully equipped for service customarily used in combination with the vehicle, and the weight of the maximum load customarily carried on the vehicle and on any semitrailers or trailers customarily used in combination with the vehicle. * * *

* * * * *

§ 41.4482(b)–1T [Removed]

Par. 11. Section 41.4482(b)–1T is removed.

Par. 12. Section 41.4482(c)–1 is amended as follows:

1. The section heading is revised.

2. Paragraphs (a), (b), and (d) are revised.

The revisions read as follows:

§ 41.4482(c)–1 Definition of State, taxable period, use, and customarily used.

(a) *State. State* includes any State, any political subdivision of a State, the District of Columbia, and, to the extent provided by section 7871, any Indian tribal government.

(b) *Taxable period.* For the definition of *taxable period*, see section 4482(c).

* * * * *

(d) *Customarily used.* A semitrailer or trailer is treated as *customarily used* in connection with a highway motor vehicle if the vehicle is equipped to tow the semitrailer or trailer.

Par. 13. Section 41.4483–1 is revised to read as follows:

§ 41.4483–1 State exemption.

Use of a highway motor vehicle by a State is exempt from the tax imposed by section 4481. For this purpose, the term *use by a State* means the operation by a State on the public highways in the United States of any highway motor vehicle, whether or not such highway motor vehicle is owned by the State.

Par. 14. Section 41.4483–2 is amended as follows:

1. Paragraph (a) is amended by removing the language ''section 6421(b)(2), as set forth in''.

2. Paragraph (e) is amended as follows:

a. Paragraph (e) introductory text, is amended by removing the language ''set forth in section 6421(b)(2)''.

b. Paragraph (e)(1) is amended by removing the language ''(rather than any different period prescribed in section 6421(b)(2))''.

c. Paragraph (e)(2), first sentence, is amended by removing the language ''(see section 4263(a))''.

d. Paragraph (e)(2), last sentence, is revised.

3. Paragraph (f) *Example (1)*, penultimate sentence, is amended by removing the language ''(not including any tax on the transportation of persons imposed by section 4261)''.

The revision reads as follows:

§ 41.4483–2 Exemption for certain transit-type buses.

* * * * *

(e) * * *

(2) * * * In determining the total of such passenger fare revenue, revenue from sources such as charter fees, rentals of property, advertising receipts, etc., is not taken into account.

* * * * *

§ 41.4483–3 [Amended]

Par. 15. Section 41.4483–3 is amended as follows:

1. Paragraph (a)(2) is amended by removing the language ''(Federal Heavy Vehicle Use Tax Return)''.

2. Paragraph (b) is amended as follows:

a. The first sentence is amended by removing the language ''shall pay'' and adding ''is liable for'' in its place.

b. The last two sentences are removed.

3. Paragraph (f) is amended as follows:

a. The second sentence is removed.

b. The last sentence is amended by adding the language ''and § 41.6011(a)–1(a)(3) for a requirement that certain transferees described in this paragraph (f) must file a return'' after ''suspension from tax''.

§ 41.4483–5 [Removed]

Par. 16. Section 41.4483–5 is removed.

§ 41.4484–1 [Removed]

Par. 17. Section 41.4484–1 is removed.

§ 41.6001–1 [Amended]

Par. 18. Section 41.6001–1 is amended as follows:

1. Paragraph (a)(6) is amended by removing the language ''for taxable periods after June 30, 1984''.

2. Paragraph (a)(7) is amended as follows:

a. The first sentence is amended by removing the language ''or, for taxable periods after June 30, 1984,'' and adding ''or'' in its place.

b. The last sentence is removed.

3. Paragraph (b) is amended by removing the language ''whether he meets'' and adding ''whether it meets'' in its place.

§ 41.6001–2 [Amended]

Par. 19. Section 41.6001–2 is amended as follows:

1. Paragraph (a), second sentence, is amended by removing the language ''104(b)(5)'' and adding ''104(b)(4)'' in its place.

2. Paragraph (c)(1)(ii) introductory text, is amended by removing the language ''If a receipted'' and adding ''With respect to taxable periods beginning before July 1, 2000, if a receipted'' in its place.

3. Paragraph (c)(1)(iii), first sentence, is amended by removing the language ''If a Schedule 1'' and adding ''With respect to taxable periods beginning before July 1, 2000, if a Schedule 1'' in its place.

4. Paragraph (d) is amended as follows:

a. *Example (1)*, seventh sentence, is amended by removing the language ''§ 41.4482(b)–1(e)'' and adding ''§ 41.4482(b)–1'' in its place.

5. *Example (2)*, second sentence, is amended by removing the language ''§ 41.4482(b)–1(e)'' and adding ''§ 41.4482(b)–1'' in its place.

6. *Example (4)* is removed.

Par. 20. Section 41.6011(a)–1 is revised to read as follows:

§ 41.6011(a)–1 Returns.

(a) *In general.* (1) A person that is liable for tax under § 41.4481–2(a)(1)(i)(A), (B), or (C) must file a return for the taxable period with respect to the tax imposed by section 4481.

(2) A person that is liable for tax under § 41.4481–2(a)(1)(i)(D) must file a return for a taxable period with respect to the tax imposed by section 4481 if the Commissioner notifies the person that the tax for the taxable period has not been paid in full.

(3) A transferee of a vehicle that receives a statement described in the first sentence of § 41.4483–3(f) must file a return with the statement attached.

(b) *Form 2290.* The return required under paragraph (a) of this section is Form 2290, ''Heavy Highway Vehicle Use Tax Return,'' or such other return as the Commissioner may prescribe. The return is made in accordance with the instructions applicable to the form.

Par. 21. Section 41.6071(a)–1 is amended as follows:

1. Paragraph (a) is revised.
2. Paragraph (b) is removed.
3. Paragraph (c) is redesignated as paragraph (b).
4. Newly designated paragraph (b) is amended by removing the language ''(but in no event earlier than the time prescribed in paragraph (a)(1) of this section for filing a return)''.
5. Paragraphs (d), (e), and (f) are removed.

The revision reads as follows.

§ 41.6071(a)–1 Time for filing returns.

(a) *In general.* Except as provided in paragraph (b) of this section, a return described in § 41.6011(a)–1 must be filed by the last day of the month following the month in which—

(1) A person becomes liable for tax under § 41.4481–2(a)(1)(i)(A), (B), or (C);

(2) A person that is liable for tax under § 41.4481–2(a)(1)(i)(D) is notified by the Commissioner that the tax has not been paid in full; or

(3) A transferee described in § 41.4483–3(f) acquires the vehicle.

* * * * *

§ 41.6081(a)–1 [Removed]

Par. 22. Section 41.6081(a)–1 is removed.

Par. 23. Section 41.6091–1 is revised to read as follows:

§ 41.6091–1 Place for filing returns.

(a) *In general.* Except as provided in paragraph (b) of this section, returns must be filed in accordance with the instructions applicable to the form on which the return is made.

(b) *Hand-carried returns*—(1) *Persons other than corporations.* Returns of persons other than corporations that are filed by hand carrying must be filed with the Commissioner in the internal revenue district in which is located the principal place of business or legal residence of the person.

(2) *Corporations.* Returns of corporations that are filed by hand carrying must be filed with the Commissioner in the internal revenue district in which is located the principal place of business or principal office or agency of the corporation.

Par. 24. Section 41.6101–1 is revised to read as follows:

§ 41.6101–1 Period covered by returns.

Each return is for a taxable period as defined in section 4482.

Par. 25. Section 41.6109–1 is revised to read as follows:

§ 41.6109–1 Identifying numbers.

Every person required under § 41.6011(a)–1 to make a return must provide the identifying number required by the instructions to the form on which the return is made.

Par. 26. Section 41.6151(a)–1 is revised to read as follows:

§ 41.6151(a)–1 Time and place for paying tax.

The tax must be paid at the time prescribed in § 41.6071(a)–1 for filing the return and at the place prescribed in § 41.6091–1 for filing the return.

§§ 41.6161(a)(1)–1, 41.6302(b)–1, and 41.7805–1 [Removed]

Par. 27. Sections 41.6161(a)(1)–1, 41.6302(b)–1, and 41.7805–1 are removed.

PART 47—[REMOVED]

Par. 28. Part 47 is removed.

PART 48—MANUFACTURERS AND RETAILERS EXCISE TAXES

Par. 29. The authority citation for part 48 is amended by removing the entries for Sections 48.4081–7 and 48.4081–9(e); 48.4082–6T, 48.4082–7T, and 4082–8T; 48.4101–2; 48.4101–3T; 48.6427–8; 48.6427–9; and 48.6427–10T and 48.6427–11T and adding entries in numerical order to read in part as follows:

Authority: 26 U.S.C. 7805 * * *

Section 48.4052–1 also issued under 26 U.S.C. 4052(g). * * *

Section 48.4081–7 also issued under 26 U.S.C. 4081(e). * * *

Section 48.4082–6 also issued under 26 U.S.C. 4082(d).

Section 48.4082–7 also issued under 26 U.S.C. 4082(d). * * *

Section 48.4101–2 also issued under 26 U.S.C. 6071(a). * * *

Section 48.6427–8 also issued under 26 U.S.C. 6427(m).

Section 48.6427–9 also issued under 26 U.S.C. 6427(m).

Section 48.6427–10 also issued under 26 U.S.C. 6427(m).

Section 48.6427–11 also issued under 26 U.S.C. 6427(m).

Par. 30. The undesignated editorial note and its authority citation at the end of the authority citation are removed.

§ 48.0–2 [Amended]

Par. 31. In § 48.0–2, paragraph (a)(2) is removed and reserved.

§ 48.4041–21 [Amended]

Par. 32. Section 48.4041–21, paragraph (c)(1), first sentence, is amended by removing the language ''§ 48.4082–4(c)(1) through (c)(4)(i) or (c)(5) through (c)(10).'' and adding ''section 4041(a)(3)(B), (b)(1), (f), (g), or (h).'' in its place.

Par. 33. In Subpart H, § 48.4052–1 is added under the undesignated centerheading ''Motor Vehicles'' to read as follows:

§ 48.4052–1 Heavy trucks and trailers; certification requirement.

(a) *In general.* Tax is not imposed by section 4051 on the sale of an article for resale or leasing in a long-term lease if, by the time of sale, the seller has in good faith accepted from the buyer a statement that the buyer executed in good faith and that is in substantially the same form, and subject to the same conditions, as the certificate described in § 145.4052–1(a)(6) of this chapter, except that the certificate must be signed under penalties of perjury and need not refer to Form 637 or include a registration number.

(b) *References to § 145.4052–1(a)(2) of this chapter.* References to § 145.4052–1(a)(2) of this chapter appearing in § 145.4052–1 of this chapter apply also to paragraph (a) of this section.

(c) *Effective date.* This section is applicable after June 30, 1998. In addition, tax is not imposed on a sale occurring after December 31, 1997, and before July 1, 1998, if the conditions of paragraph (a) of this section are satisfied.

Par. 34. Section 48.4081–1 is amended as follows:

1. Paragraph (b) is amended by:

a. Revising the definition of Aviation gasoline.

b. Removing the definition of Diesel-powered boat.

c. Adding the definition of Excluded liquid in alphabetical order.

d. Adding the definition of Kerosene in alphabetical order.

e. Revising the definition of Rack.

f. Removing the language ''(as defined in § 48.4041–8(f))'' in the definition of Removal, first sentence.

g. Removing the language ''subject to the limitations of section 7871, any Indian tribal government.'' and adding ''to the extent provided by section 7871, any Indian tribal government.'' in its place in the definition of State.

h. Revising the definition of Taxable fuel.

i. Adding the language ''as such'' after ''is registered'' in the definition of Taxable fuel registrant.

j. Removing the language ''operated by a taxable fuel registrant if all of the finished gasoline and diesel fuel (other than diesel fuel dyed in accordance with § 48.4082–1(b))'' and adding ''where finished gasoline, undyed diesel fuel, or undyed kerosene is stored if the facility is operated by a taxable fuel registrant and all such taxable fuel'' in its place in the definition of Terminal, last sentence.

2. Paragraph (c)(1)(i) introductory text, is amended by removing the

language ''and (c)(iii)'' and adding ''and (c)(1)(iii)'' in its place.

3. Paragraph (c)(1)(i)(A) is amended by adding the language ''(other than taxable fuel for which a credit or payment has been allowed)'' after ''4081(a)''.

4. Paragraphs (c)(2) and (d) are revised.

5. Paragraphs (e) and (f) are added.

The revisions and additions read as follows:

§ 48.4081–1 Taxable fuel; definitions.

* * * * *

(b) * * *

Aviation gasoline means all special grades of gasoline that are suitable for use in aviation reciprocating engines and covered by ASTM specification D 910 or military specification MIL–G–5572. For availability of ASTM and military specifications, see paragraph (d) of this section.

* * * * *

Excluded liquid means any liquid that—

(1) Contains less than four percent normal paraffins; or

(2) Has a—

(i) Distillation range of 125° F. or less;

(ii) Sulfur content of 10 ppm or less; and

(iii) Minimum color of +27 Saybolt.

* * * * *

Kerosene means any liquid that meets the specifications for kerosene or would meet those specifications but for the presence in the liquid of a dye of the type described in § 48.4082–1(b). A liquid meets the specifications for kerosene if it is one of the two grades of kerosene (No. 1–K and No. 2–K) covered by ASTM specification D 3699, or kerosene-type jet fuel covered by ASTM specification D 1655 or military specification MIL–DTL–5624T (Grade JP–5) or MIL–DTL–83133E (Grade JP–8). For availability of ASTM and military specifications, see paragraph (d) of this section. However, the term does not include *excluded liquid.*

* * * * *

Rack means a mechanism capable of delivering taxable fuel into a means of transport other than a pipeline or vessel.

* * * * *

Taxable fuel means gasoline, diesel fuel, and kerosene.

* * * * *

(c) * * *

(2) *Diesel fuel*—(i) *In general.* Except as provided in paragraph (c)(2)(ii) of this section, *diesel fuel* means any liquid that, without further processing or blending, is suitable for use as a fuel in a diesel-powered highway vehicle or diesel-powered train.

(ii) *Exclusion. Diesel fuel* does not include gasoline, kerosene, excluded liquid, No. 5 and No. 6 fuel oils covered by ASTM specification D 396, or F–76 (Fuel Naval Distillate) covered by military specification MIL–F–16884. For availability of ASTM and military specifications, see paragraph (d) of this section.

* * * * *

(d) *ASTM and military specifications.* ASTM specifications may be obtained from the American Society for Testing and Materials, 100 Barr Harbor Drive, West Conshohocken, PA 19428. Military specifications may be obtained from the Standardization Document Order Desk, Building 4, Section D, 700 Robbins Avenue, Philadelphia, PA 19111.

(e) *Other definitions.* For other definitions relating to taxable fuel, see §§ 48.4081–6(b), 48.4082–5(b), 48.4082–6(b), 48.4082–7(b), 48.4101–1(b), 48.6427–9(b), 48.6427–10(b), and 48.6427–11(b).

(f) *Effective date.* (1) Except as provided in paragraph (f)(2) of this section, this section is applicable after December 31, 1993.

(2) In paragraph (b) of this section, the definition of aviation gasoline and the third sentence in the definition of terminal are applicable after January 1, 1998, and the definitions of kerosene, excluded liquid, and taxable fuel are applicable after June 30, 1998. Paragraph (c)(2) of this section is applicable after December 31, 1997.

§ 48.4081–1T [Removed]

Par. 35. Section 48.4081–1T is removed.

Par. 36. Section 48.4081–2 is amended as follows:

1. Paragraph (b) is amended by removing the language ''Except as provided in § 48.4081–4 (relating to gasoline blendstocks) and § 48.4082–1 (relating to dyed diesel fuel), tax'' and adding ''Tax'' in its place.

2. Paragraph (c)(3) is amended by adding the language ''or kerosene'' after ''diesel fuel'' each place it appears.

3. Paragraph (e) is revised.

4. Paragraph (f) is added.

The addition and revision read as follows:

§ 48.4081–2 Taxable fuel; tax on removal at a terminal rack.

* * * * *

(e) *Exemptions.* For exemptions from the tax imposed under this section, see §§ 48.4081–4 (relating to gasoline blendstocks), 48.4082–1 (relating to dyed diesel fuel and dyed kerosene), 48.4082–5 (relating to diesel fuel and kerosene used in Alaska), 48.4082–6 (relating to aviation-grade kerosene), and 48.4082–7 (relating to kerosene used for a feedstock purpose).

(f) *Effective date.* This section is applicable after December 31, 1993.

Par. 37. Section 48.4081–3 is amended as follows:

1. Paragraph (a) is amended by removing the last sentence.

2. Paragraph (b)(1) is amended as follows:

a. In the introductory text, the language ''Except as provided in paragraph (b)(2) of this section (relating to an exemption for certain refineries), § 48.4081–4 (relating to gasoline blendstocks), and § 48.4082–1 (relating to dyed diesel fuel), tax'' is removed and ''Tax'' is added in its place.

b. In paragraph (b)(1)(i), the language ''of taxable fuel'' is added after ''A removal''.

c. In paragraph (b)(1)(ii), the language ''of taxable fuel'' is added after ''A removal''.

d. In paragraph (b)(1)(iii), third sentence, the language ''§ 40.6302(c)-1(e)(4)'' is removed and ''§ 40.6302(c)-1(f)(4)'' is added in its place.

3. In paragraph (c)(1) introductory text, the language ''Except as provided in § 48.4081–4 (relating to gasoline blendstocks) and § 48.4082–1 (relating to dyed diesel fuel), a tax'' is removed and ''Tax'' is added in its place.

4. In paragraph (d)(1), the language ''A tax is imposed'' is removed and ''Tax is imposed'' is added in its place.

5. In paragraph (e)(1) introductory text, the language ''Except as provided in § 48.4081–4 (relating to gasoline blendstocks) and § 48.4082–1 (relating to dyed diesel fuel), a tax'' is removed and ''Tax'' is added in its place.

6. In paragraph (f)(1), the language ''Except as provided in paragraph (f)(2) of this section and § 48.4082–1 (relating to dyed diesel fuel), a tax'' is removed and ''Tax'' is added in its place.

7. Paragraph (i) is revised.

8. Paragraph (j) is added.

The revision and addition read as follows:

§ 48.4081–3 Taxable fuel; taxable events other than removal at the terminal rack.

* * * * *

(i) *Exemptions.* For exemptions from the taxes imposed under this section, see §§ 48.4081–4 (relating to gasoline blendstocks), 48.4082–1 (relating to dyed diesel fuel and dyed kerosene), 48.4082–5 (relating to diesel fuel and kerosene used in Alaska), 48.4082–6 (relating to aviation-grade kerosene), and 48.4082–7 (relating to kerosene used for a feedstock purpose).

(j) *Effective date.* This section is applicable January 1, 1994.

Par. 38. In § 48.4081–6, paragraph (b)(3) is revised to read as follows:

§ 48.4081–6 Gasoline; gasohol.

* * * * *

(b) * * *

(3) *Gasohol blender.* Gasohol blender means any person that regularly produces gasohol outside of the bulk transfer/terminal system for sale or use in its trade or business.

* * * * *

§ 48.4081–7 [Amended]

Par. 39. Section 48.4081–7 is amended as follows:

1. In paragraph (c)(2), First Taxpayer's Report, the following language is removed:

''7._____

Location of IRS service center where this report is filed''

2. In paragraph (c)(4)(v), the language ''gasoline'' is removed each place it appears and ''taxable fuel'' is added in its place.

3. In paragraph (f) *Example 1*, the language ''gasoline registrant'' is removed and ''taxable fuel registrant'' is added in its place in the following locations:

a. Paragraph (i), first sentence.

b. Paragraph (i), second sentence.

c. Paragraph (ii), first sentence.

Par. 40. In § 48.4081–8, paragraph (a) is revised to read as follows:

§ 48.4081–8 Taxable fuel; measurement.

(a) *In general.* Volumes of taxable fuel may be measured on the basis of actual volumetric gallons or gallons adjusted to 60 degrees Fahrenheit. However, beginning July 1, 2000, for each period from July 1 through the following June 30—

(1) A person liable for the tax on removal may use only one of the two bases of measurement with respect to all taxable fuel removed during the period from any particular terminal, refinery, or blending facility;

(2) A person liable for the tax on entry may use only one of the two bases of measurement with respect to all taxable fuel entered into the United States during the period at any particular point of entry; and

(3) A person liable for the tax on sale may use only one of the two bases of measurement with respect to all taxable fuel sold during the period to any particular buyer.

* * * * *

§ 48.4081–9 [Removed]

Par. 41. Section 48.4081–9 is removed.

Par. 42. Section 48.4082–1 is amended as follows:

1. The section heading is revised.

2. In paragraph (a) introductory text, the language ''or kerosene'' is added after ''diesel fuel''.

3. In paragraph (a)(3), the language ''or kerosene'' is added after ''diesel fuel''.

4. In paragraph (b), the introductory text is revised.

5. In paragraph (b)(1), the language ''or kerosene'' is added after ''diesel fuel''.

The revisions read as follows:

§ 48.4082–1 Diesel fuel and kerosene; exemption for dyed fuel.

* * * * *

(b) * * * Diesel fuel or kerosene satisfies the dyeing requirement of this paragraph (b) only if the diesel fuel or kerosene contains—

* * * * *

Par. 43. Sections 48.4082–2 and 48.4082–3 are revised to read as follows:

§ 48.4082–2 Diesel fuel and kerosene; notice required for dyed fuel.

(a) *In general.* A legible and conspicuous notice stating *''DYED DIESEL FUEL, NONTAXABLE USE ONLY, PENALTY FOR TAXABLE USE''* must be posted by a seller on any retail pump or other delivery facility where it sells dyed diesel fuel for use by its buyer. A legible and conspicuous notice stating *''DYED KEROSENE, NONTAXABLE USE ONLY, PENALTY FOR TAXABLE USE''* must be posted by a seller on any retail pump or other delivery facility where it sells dyed kerosene for use by its buyer. Any seller that fails to post the required notice on any retail pump or other delivery facility where it sells dyed fuel is, for purposes of the penalty imposed by section 6715, presumed to know that the fuel will not be used for a nontaxable use.

(b) *Cross reference; terminal operators.* For the requirement that terminal operators provide a notice with respect to dyed fuel, see § 48.4101–1(h)(3) (relating to terms and conditions of registration for terminal operators).

(c) *Effective date.* This section is applicable with respect to diesel fuel after December 31, 1993, and with respect to kerosene after June 30, 1998.

§ 48.4082–3 Diesel fuel and kerosene; visual inspection devices. [Reserved]

Par. 44. Section 48.4082–4 is amended as follows:

1. The section heading is revised.

2. Paragraph (a)(1) is revised.

3. Paragraph (a)(2)(i) is amended by removing the language ''or boat''.

4. Paragraphs (b) heading and (b)(1) are revised.

5. Paragraph (c) is amended by:

a. Removing paragraphs (c)(4) and (c)(10);

b. Redesignating paragraphs (c)(5), (c)(6), (c)(7), (c)(8), and (c)(9) as paragraphs (c)(4), (c)(5), (c)(6), (c)(7), and (c)(8), respectively.

c. Adding the language ''or'' at the end of newly designated paragraph (c)(7).

d. Removing the language ''highway; or'' at the end of newly designated paragraph (c)(8) and adding ''highway.'' in its place.

6. Paragraph (d) is revised.

The revisions read as follows:

§ 48.4082–4 Diesel fuel and kerosene; back-up tax.

(a) *Imposition of tax*—(1) *In general.* Tax is imposed by section 4041 on the delivery into the fuel supply tank of the propulsion engine of a diesel-powered highway vehicle (other than a diesel-powered bus) of—

(i) Any diesel fuel or kerosene on which tax has not been imposed by section 4081;

(ii) Any diesel fuel or kerosene for which a credit or payment has been allowed under section 6427; or

(iii) Any liquid (other than taxable fuel) for use as fuel.

* * * * *

(b) *Tax on diesel fuel and kerosene; buses and trains*—(1) *In general.* Tax is imposed by section 4041 on the delivery into the fuel supply tank of the propulsion engine of a diesel-powered bus or a diesel-powered train of—

(i) Any diesel fuel or kerosene on which tax has not been imposed by section 4081;

(ii) Any diesel fuel or kerosene for which a credit or payment has been allowed under section 6427; or

(iii) Any liquid (other than taxable fuel) for use as fuel.

* * * * *

(d) *Effective date.* This section is applicable after December 31, 1993, except that references to kerosene are applicable after June 30, 1998.

Par. 45. Section 48.4082–5 is amended as follows:

1. The section heading is revised.

2. Paragraph (a) is amended by adding ''or kerosene'' after ''diesel fuel''.

3. Paragraph (b), definition of Exempt area of Alaska, is amended by removing the language ''Clear'' and adding ''Clean'' in its place.

4. Paragraphs (b), (c), (d), and (g) are amended by adding ''or kerosene'' after ''diesel fuel'' in the following locations:

a. Paragraph (b), definition of Qualified dealer, paragraph (1).

b. Paragraph (c) introductory text.

c. Paragraph (c)(3).

d. Paragraph (d)(1) introductory text.
e. Paragraph (d)(2).
f. Paragraph (g).
5. Paragraph (h), first sentence, is revised.
The revisions read as follows:

§ 48.4082–5 Diesel fuel and kerosene; Alaska.

* * * * *

(h) *Effective date.* This section is applicable with respect to diesel fuel removed or entered after December 31, 1996, and with respect to kerosene removed or entered after June 30, 1998.
* * *

Par. 46. Sections 48.4082–6 and 48.4082–7 are added to read as follows:

§ 48.4082–6 Kerosene; exemption for aviation-grade kerosene.

(a) *Overview.* This section prescribes the conditions under which tax does not apply to the removal or entry of aviation-grade kerosene that is destined for use as a fuel in an aircraft.

(b) *Definition.* For purposes of this section, *aviation-grade kerosene* means kerosene-type jet fuel covered by ASTM specification D 1655 or military specification MIL–DTL–5624T (Grade JP–5) or MIL–DTL–83133E (Grade JP–8). For availability of ASTM and military specifications, see § 48.4081–1(d).

(c) *Exemption for certain removals and entries.* Tax is not imposed under § 48.4081–2(b), 48.4081–3(b)(1)(ii), or 48.4081–3(c)(1)(ii) on the removal or entry of aviation-grade kerosene if—

(1) The person otherwise liable for tax is a taxable fuel registrant;

(2) In the case of a removal from a terminal, the terminal is an approved terminal; and

(3)(i) The person otherwise liable for tax delivers the kerosene into the fuel supply tank of an aircraft and this delivery is not in connection with a sale; or

(ii) The kerosene is sold for use as a fuel in an aircraft and, at the time of the sale, the person otherwise liable for tax has an unexpired certificate (described in paragraph (e) of this section) from the buyer and has no reason to believe any information in the certificate is false.

(d) *Certain later sales*—(1) *In general.* Paragraph (c) of this section does not apply with respect to kerosene that is sold as described in paragraph (c)(3)(ii) of this section if there is a later disqualifying sale of the kerosene. A later disqualifying sale is any later sale other than a later sale—

(i) By a person that, at the time of the sale, has an unexpired certificate (described in paragraph (e) of this section) from the buyer and has no reason to believe that any information in the certificate is false; or

(ii) In connection with the delivery of the kerosene into the fuel supply tank of an aircraft.

(2) *Imposition of tax; liability for tax.* Notwithstanding §§ 48.4081–2 and 48.4081–3, in any case in which paragraph (d)(1) of this section applies, tax is imposed with respect to that kerosene at the time of the first later disqualifying sale and the seller in that sale is liable for the tax.

(3) *Rate of tax.* For the rate of tax, see section 4081.

(e) *Certificate*—(1) *In general.* The certificate described in this paragraph (e) is a statement by a buyer that is signed under penalties of perjury by a person with authority to bind the buyer, is in substantially the same form as the model certificate provided in paragraph (e)(3) of this section, and contains all information necessary to complete the model certificate. A new certificate or notice that the current certificate is invalid must be given if any information in the current certificate changes. The certificate may be included as part of any business records normally used to document a sale. The certificate expires on the earliest of the following dates:

(i) The date one year after the effective date of the certificate (which may be no earlier than the date it is signed).

(ii) The date the buyer provides the seller a new certificate or notice that the current certificate is invalid.

(iii) The date the Internal Revenue Service or the buyer notifies the seller that the buyer's right to provide a certificate has been withdrawn.

(2) *Withdrawal of the right to provide a certificate.* The Internal Revenue Service may withdraw the right of a buyer of aviation-grade kerosene to provide a certificate under this section if the buyer uses the aviation-grade kerosene to which a certificate relates other than as a fuel in an aircraft or sells the kerosene without first obtaining a certificate from its buyer. The Internal Revenue Service may notify any seller to whom the buyer has provided a certificate that the buyer's right to provide a certificate has been withdrawn.

(3) *Model certificate.*

CERTIFICATE OF PERSON BUYING AVIATION-GRADE KEROSENE FOR USE AS A FUEL IN AN AIRCRAFT

(To support tax-free removals and entries of aviation-grade kerosene under section 4082 of the Internal Revenue Code.)

Name of Buyer _____ (Buyer) certifies the following under penalties of perjury:

The aviation-grade kerosene to which this certificate applies will be used by Buyer as a fuel in an aircraft or resold by Buyer for that use.

This certificate applies to _____ percent of Buyer's purchases from _____ (name, address, and employer identification number of seller) as follows (complete as applicable):

1. A single purchase on invoice or delivery ticket number _____.

2. All purchases between _____ (effective date) and _____ (expiration date) (period not to exceed one year after the effective date) under account or order number(s) _____. If this certificate applies only to Buyer's purchases for certain locations, check here _____ and list the locations.

_____
_____
_____

Buyer is buying the kerosene for (check either or both as applicable): ____ Buyer's use as a fuel in an aircraft. ____ Resale for use as a fuel in an aircraft.

Buyer will provide a new certificate to the seller if any information in this certificate changes.

If Buyer sells the aviation-grade kerosene to which this certificate relates and does not deliver it into the fuel supply tank of an aircraft, Buyer will be liable for tax unless Buyer obtains a certificate from its buyer stating that the aviation-grade kerosene will be used as a fuel in an aircraft.

If Buyer violates the terms of this certificate, the Internal Revenue Service may withdraw Buyer's right to provide a certificate.

Buyer has not been notified by the Internal Revenue Service that its right to provide a certificate has been withdrawn.

The fraudulent use of this certificate may subject Buyer and all parties making any fraudulent use of this certificate to a fine or imprisonment, or both, together with the costs of prosecution.

_____
Printed or typed name of person signing

_____
Title of person signing

_____
Employer identification number

_____
Address of Buyer

_____
Signature and date signed

(f) *Effective date.* This section is applicable after March 30, 2000, except that paragraph (d) of this section is applicable after June 30, 2000.

§ 48.4082–7 Kerosene; exemption for feedstock purposes.

(a) *Overview.* This section prescribes the conditions under which tax does not apply to the removal or entry of kerosene for use for a feedstock purpose.

(b) *Definitions.* The following definitions apply to this section:

Feedstock purpose means the use of kerosene for nonfuel purposes in the manufacture or production of any substance other than gasoline, diesel fuel, or special fuels referred to in section 4041. Thus, for example,

kerosene is used for a feedstock purpose when it is used as an ingredient in the production of paint and is not used for a feedstock purpose when it is used to power machinery at a factory where paint is produced.

Feedstock user means a person that uses kerosene for a feedstock purpose.

Registered feedstock user means a feedstock user that is—

(1) Registered under section 4101 as a feedstock user; or

(2) With respect to removals and entries before October 1, 2000, a taxable fuel registrant.

(c) *Exemption for removals and entries.* Tax is not imposed on the removal or entry of kerosene if—

(1) The person otherwise liable for tax is a taxable fuel registrant;

(2) In the case of a removal from a terminal, the terminal is an approved terminal; and

(3)(i) The person otherwise liable for tax uses the kerosene for a feedstock purpose; or

(ii) The kerosene is sold for use by the buyer for a feedstock purpose and, at the time of the sale, the person otherwise liable for tax has an unexpired certificate (described in paragraph (e) of this section) from the buyer and has no reason to believe any information in the certificate is false.

(d) *Later sale*—(1) *In general.* Paragraph (c) of this section does not apply with respect to kerosene that is sold as described in paragraph (c)(3)(ii) of this section if the buyer in that sale (the certifying buyer) sells the kerosene.

(2) *Imposition of tax; liability for tax.* Notwithstanding §§ 48.4081–2 and 48.4081–3, in any case in which paragraph (d)(1) of this section applies, tax with respect to that kerosene is imposed at the time of the sale by the certifying buyer and the certifying buyer is liable for the tax.

(3) *Rate of tax.* For the rate of tax, see section 4081.

(e) *Certificate*—(1) *In general.* The certificate described in this paragraph (e) is a statement by a buyer that is signed under penalties of perjury by a person with authority to bind the buyer, is in substantially the same form as the model certificate provided in paragraph (e)(2) of this section, and contains all information necessary to complete the model certificate. A new certificate or notice that the current certificate is invalid must be given if any information in the current certificate changes. The certificate may be included as part of any business records normally used to document a sale. The certificate expires on the earliest of the following dates:

(i) The date one year after the effective date of the certificate (which may be no earlier than the date it is signed).

(ii) The date the buyer provides the seller a new certificate or notice that the current certificate is invalid.

(iii) The date the seller is notified by the Internal Revenue Service or the buyer that the buyer's registration has been revoked or suspended.

(2) *Model certificate.*

CERTIFICATE OF REGISTERED FEEDSTOCK USER

(To support tax-free removals and entries of kerosene under section 4082 of the Internal Revenue Code.)

_____(Buyer) certifies the following under penalties of perjury:

Name of Buyer _____

Buyer is a registered feedstock user with registration number _____. Buyer's registration has not been revoked or suspended.

The kerosene to which this certificate applies will be used by Buyer for a feedstock purpose.

This certificate applies to _____ percent of Buyer's purchases from _____ (name, address, and employer identification number of seller as follows (complete as applicable):

1. A single purchase on invoice or delivery ticket number _____.

2. All purchases between _____ (effective date) and _____ (expiration date) (period not to exceed one year after the effective date) under account or order number(s) _____. If this certificate applies only to Buyer's purchases for certain locations, check here _____ and list the locations.

_____

_____

_____

If Buyer sells the kerosene to which this certificate relates, Buyer will be liable for tax on that sale.

Buyer will provide a new certificate to the seller if any information in this certificate changes.

If Buyer violates the terms of this certificate, the Internal Revenue Service may revoke Buyer's registration.

Buyer understands that the fraudulent use of this certificate may subject Buyer and all parties making any fraudulent use of this certificate to a fine or imprisonment, or both, together with the costs of prosecution.

_____

Printed or typed name of person signing

_____

Title of person signing

_____

Employer identification number

_____

Address of Buyer

_____

Signature and date signed

_____

(f) *Effective date.* This section is applicable after March 30, 2000, except that paragraph (d) of this section is applicable after June 30, 2000.

§§ 48.4082–6T, 48.4082–7T, 48.4082–8T, 48.4082–9T, and 48.4082–10T [Removed]

Par. 47. Sections 48.4082–6T, 48.4082–7T, 48.4082–8T, 48.4082–9T, and 48.4082–10T are removed.

Par. 48. Section 48.4083–1 is amended as follows:

1. In paragraph (c)(2), first sentence, the language ''vehicle, train, or boat'' is removed and ''vehicle or train'' is added in its place.

2. Paragraph (d) is revised.

The revision reads as follows:

§ 48.4083–1 Taxable fuel; administrative authority.

* * * * *

(d) *Refusal to submit to inspection.* For the penalty for any refusal to permit an entry or inspection authorized by this section, see section 4083(c)(3). This penalty is in addition to any tax that may be imposed by section 4041 or 4081 and any penalty that may be imposed by section 6715.

* * * * *

§ 48.4091–3T [Redesignated as § 48.4091–3]

§ 48.4091–3 [Amended]

Par. 49. Section 48.4091–3T is redesignated as § 48.4091–3 and the language ''(temporary)'' is removed from the section heading.

Par. 50. Section 48.4101–1 is amended as follows:

1. The section heading is revised.

2. Paragraph (a)(1) is amended by removing the language ''registered ultimate vendors of diesel fuel'' and adding ''certain ultimate vendors of diesel fuel and kerosene'' in its place.

3. Paragraph (a)(2) is amended by adding a sentence to the end of the paragraph.

4. Paragraph (a)(6) is added.

5. Paragraphs (b)(7), (b)(8), and (b)(9) are added.

6. Paragraph (c)(1) is revised.

7. Paragraph (d) is revised.

8. Paragraph (f)(1)(i) heading is revised.

9. Paragraph (f)(1)(ii) heading and introductory text are revised.

10. Paragraph (h)(1)(iii) is amended by removing the language ''and § 48.4101–2''.

11. Paragraph (h)(2)(iii) is revised.

12. Paragraph (h)(2)(iv) is added.

13. Paragraph (h)(3)(i) is revised.

14. Paragraph (h)(3)(ii) is amended by adding ''or kerosene'' after ''diesel fuel'' in the heading and the introductory text.

15. Paragraph (h)(3)(v) is amended by adding ''or kerosene'' after ''diesel fuel'' each place it appears.

16. Paragraphs (i)(2)(ii) and (i)(2)(iii) are amended by removing the language

''vendor'' and adding ''vendor or an ultimate vendor (blocked pump)'' in its place.

17. Paragraph (k) is amended by adding a sentence to the end of the paragraph.

18. Paragraph (l)(2) is amended by adding the language '', except that paragraphs (c)(1)(iii) and (c)(1)(vi) of this section are applicable after March 31, 2001'' after ''January 1, 1995''.

19. Paragraph (l)(4) is added.

The revisions and additions read as follows:

§ 48.4101–1 Taxable fuel; registration.

(a) * * *

(2) * * * However, the United States is treated as registered under section 4101.

* * * * *

(6)(i) A person is treated as a taxable fuel registrant if on June 30, 1998, the person—

(A) Is an enterer, refiner, terminal operator, or throughputter with respect to kerosene and is registered under section 4101 as a producer or importer of aviation fuel;

(B) Operates one or more terminals that store kerosene (and no other type of taxable fuel); or

(C) Is a commercial airline, an operator of aircraft in noncommercial aviation, or a fixed base operator and is also a position holder with respect to kerosene.

(ii) A person treated as registered under paragraph (a)(6)(i) of this section is treated as registered from July 1, 1998, until the earlier of—

(A) The date of a subsequent denial of an application for registration under paragraph (g)(2) of this section;

(B) The effective date of a subsequent registration issued under paragraph (g)(3) of this section;

(C) The effective date of a subsequent revocation or suspension of registration under paragraph (i) of this section; or

(D) July 1, 1999.

(b) * * *

(7) *Pipeline operator.* A *pipeline operator* is any person that operates a pipeline within the bulk transfer/terminal system.

(8) *Vessel operator.* A *vessel operator* is any person that operates a vessel within the bulk transfer/terminal system. However, for purposes of this definition, *vessel* does not include a deep draft ocean-going vessel (as defined in § 48.4042–3(a)).

(9) *Other definitions.* For other definitions relating to taxable fuel, see §§ 48.4081–1, 48.4081–6(b), 48.4082–5(b), 48.4082–6(b), 48.4082–7(b), 48.6427–9(b), 48.6427–10(b), and 48.6427–11(b).

(c) * * * (1) *In general.* A person is required to be registered under section 4101 if the person is—

(i) A blender;

(ii) An enterer;

(iii) A pipeline operator;

(iv) A position holder;

(v) A terminal operator; or

(vi) A vessel operator.

* * * * *

(d) *Persons that may, but are not required to, be registered.* A person may, but is not required to, be registered under section 4101 if the person is—

(1) A feedstock user;

(2) A gasohol blender;

(3) An industrial user;

(4) A throughputter that is not a position holder;

(5) An ultimate vendor; or

(6) An ultimate vendor (blocked pump).

* * * * *

(f) * * *

(1) * * *

(i) *Persons other than ultimate vendors, pipeline operators, and vessel operators.* * * *

* * * * *

(ii) *Ultimate vendors, pipeline operators, and vessel operators.* The district director will register an applicant as an ultimate vendor, ultimate vendor (blocked pump), pipeline operator, or vessel operator only if the district director—

* * * * *

(h) * * *

(2) * * *

(iii) Make any false statement on, or violate the terms of, any certificate given to another person to support an exemption from, or a reduced rate of, the tax imposed by section 4081; or

(iv) In the case of an ultimate vendor (blocked pump), deliver kerosene (or allow kerosene to be delivered) into the fuel supply tank of a diesel-powered highway vehicle or diesel-powered train from a blocked pump.

(3) * * * (i) *Notice required with respect to dyed diesel fuel and dyed kerosene.* A legible and conspicuous notice stating ''*DYED DIESEL FUEL, NONTAXABLE USE ONLY, PENALTY FOR TAXABLE USE*'' must be provided by each terminal operator to any person that receives dyed diesel fuel at a terminal rack of that operator. A legible and conspicuous notice stating ''*DYED KEROSENE, NONTAXABLE USE ONLY, PENALTY FOR TAXABLE USE*'' must be provided by each terminal operator to any person that receives dyed kerosene at a terminal rack of that operator. These notices must be provided by the time of the removal and must appear on all shipping papers, bills of lading, and similar documents that are provided by the terminal operator to accompany the removal of the fuel.

* * * * *

(k) * * * For rules relating to claims by registered ultimate vendors (blocked pump), see § 48.6427–10.

(l) * * *

(4) References in this section to kerosene are applicable after June 30, 1998.

Par. 51. Section 48.4101–2 is revised to read as follows:

§ 48.4101–2 Information reporting.

(a) *In general.* Each information report under section 4101(d) must be—

(1) Made in the form required by the Commissioner;

(2) Made for a period of one calendar month; and

(3) Filed by the last day of the first month following the month for which the report is made, except that a report relating to any month during 2000 must be filed by February 28, 2001.

(b) *Effective date.* This section is applicable after March 30, 2000.

§§ 48.4102–2T and 48.4101–3T [Removed]

Par. 52. Sections 48.4102–2T and 48.4101–3T are removed.

§ 48.4221–1 [Amended]

Par. 53. In § 48.4221–1, paragraph (a)(2)(ii) is amended by removing the language ''(gasoline and diesel fuel tax)'' and adding ''(taxable fuel tax)'' in its place.

§ 48.4222(b)–1 [Amended]

Par. 54. In § 48.4222(b)–1, paragraph (c), first sentence, is amended by removing the language ''paragraph (f)'' and adding ''paragraph (b)'' in its place.

§ 48.6416(b)(2)–1 [Amended]

Par. 55. Section 48.6416(b)(2)–1 is amended by removing the third sentence.

Par. 56. In § 48.6416(b)(2)–2, paragraph (a) is revised to read as follows:

§ 48.6416(b)(2)–2 Exportations, uses, sales, and resales included.

(a) *In general.* The tax paid under chapter 32 (or under section 4041(a) or (d) in respect of sales or under section 4051) with respect to any article is considered to be an overpayment in the case of any exportation, use, sale, or resale described in this section. This section applies only in those cases in which the exportation, use, sale, or resale (or any combination thereof) referred to in this section occurs before any other use. In addition, the following

restrictions must be taken into account in applying the regulations under section 6416(b)(2):

(1) Sections 6416(b)(2)(C) and (D) do not apply to any tax paid under section 4064 (gas guzzler tax).

(2) Sections 6416(b)(2)(B), (C), and (D) do not apply to any tax paid under section 4131 (vaccine tax) and section 6416(b)(2)(A) applies only to the extent prescribed in paragraph (b)(2) of this section.

(3) Section 6416(b)(2) does not apply to any tax paid under section 4041(a)(1) or 4081 on diesel fuel or kerosene, section 4091 (aviation fuel tax), or section 4121 (coal tax).

* * * * *

§ 48.6420–7 [Removed]

Par. 57. Section 48.6420–7 is removed.

§ 48.6420(c)–2 [Removed]

Par. 58. Section 48.6420(c)–2 is removed.

§ 48.6421–2 [Amended]

Par. 59. In § 48.6421–2, paragraph (a) is amended by removing the last sentence.

Par. 60. Section 48.6427–8 is amended as follows:

1. The section heading and paragraphs (a) and (b)(1) are revised.

2. Paragraph (b)(2) *Example 1,* paragraph (i) is amended as follows:

a. In the first and second sentences, the language ''1996'' is removed and ''2000'' is added in its place.

b. In the fourth sentence, the language ''§ 48.4081–1(h)'' is removed and ''§ 48.4081–1(b)'' is added in its place.

3. Paragraph (b)(2) *Example 1,* paragraph (ii) is amended by removing the language ''(b)(1)(vi)(C)'' and adding ''(b)(1)(vii)(C)'' in its place.

4. Paragraph (b)(2) *Example 2,* paragraph (i) is amended as follows:

a. In the first sentence, the language ''1996'' is removed and ''2000'' is added in its place.

b. In the third sentence, the language ''or diesel-powered boat'' is removed.

5. Paragraph (d) is amended as follows:

a. By removing from paragraph (d)(1) the language ''covered by the claim''

b. By revising paragraphs (d)(2) and (d)(3).

c. By adding the language ''or kerosene'' after ''diesel fuel'' in paragraphs (d)(4) and (d)(5).

6. Paragraph (f) is revised.

The revisions read as follows:

§ 48.6427–8 Diesel fuel and kerosene; claims by ultimate purchasers.

(a) *Overview.* This section provides rules under which ultimate purchasers of taxed diesel fuel and kerosene may claim the income tax credits or payments allowed by section 6427(l). Generally, these claims relate to diesel fuel and kerosene used in nontaxable uses. Claims relating to diesel fuel and kerosene sold for use on a farm for farming purposes and by a State are made by registered ultimate vendors under § 48.6427–9; claims relating to kerosene sold from a blocked pump are made by registered ultimate vendors (blocked pump) under § 48.6427–10; and claims relating to kerosene sold during certain periods of extreme cold for blending with diesel fuel to be used for heating purposes are made by registered ultimate vendors (blending) under § 48.6427–11.

(b) *Conditions to allowance of credit or payment*—(1) *In general.* Except as provided in section 6427(l)(5), a claim for an income tax credit or payment with respect to diesel fuel or kerosene is allowed under section 6427(l) only if—

(i) Tax was imposed by section 4081 on the diesel fuel or kerosene to which the claim relates;

(ii) The claimant produced or bought the diesel fuel or kerosene and did not sell it in the United States;

(iii) The claimant has filed a timely claim for a credit or payment that contains the information required under paragraph (d) of this section;

(iv) The diesel fuel or kerosene was not bought under a certificate described in § 48.6427–9(e)(2) (relating to Certificate of Farming Use or State Use);

(v) The diesel fuel or kerosene was not used on a farm for farming purposes (as defined in § 48.6420–4) or by a State;

(vi) With respect to kerosene, the kerosene was not sold from a blocked pump or sold for blending with diesel fuel under the conditions described in § 48.6427–11; and

(vii) The diesel fuel or kerosene was either—

(A) Used in a use described in § 48.4082–4(c)(3) through (c)(8);

(B) Exported;

(C) Used other than as a fuel in a propulsion engine of a diesel-powered highway vehicle; or

(D) Used as a fuel in the propulsion engine of a diesel-powered bus if the bus was engaged in a use described in section 6427(b)(1) (after the application of section 6427(b)(3)).

* * * * *

(d) * * *

(2) A statement by the claimant that—

(i) The diesel fuel or kerosene did not contain visible evidence of dye; or

(ii) In the case of diesel fuel or kerosene that contains visible evidence of dye, explains the circumstances under which tax was imposed on that fuel.

(3) The use made of the diesel fuel or kerosene covered by the claim described by reference to specific categories listed in paragraph (b)(1)(vii) of this section (such as use in a qualified local bus or the exclusive use of a nonprofit educational organization).

* * * * *

(f) *Effective date.* This section is applicable with respect to diesel fuel after December 31, 1993, except for paragraph (b)(1)(iv) of this section, which is applicable to diesel fuel bought by ultimate purchasers after June 30, 1994. This section is applicable with respect to kerosene after June 30, 1998.

Par. 61. Section 48.6427–9 is amended as follows:

1. The section heading and paragraph (a) are revised.

2. Paragraph (b) is amended by:

a. Adding the language ''or undyed kerosene'' after ''diesel fuel'' in the introductory text.

b. Revising paragraph (b)(2).

3. Paragraph (c) is amended by revising the introductory text, paragraph (c)(1), and paragraph (c)(2) introductory text.

4. Paragraph (e) is amended by adding ''or kerosene'' after ''diesel fuel'' in the following locations:

a. Paragraph (e)(1) introductory text.

b. Paragraph (e)(1)(iv).

c. Paragraph (e)(1)(v)(A).

5. Paragraphs (e)(1)(i) and (e)(1)(ii) are revised.

6. Paragraph (e)(1)(vi) is amended by removing the language ''For claims relating to sales by the claimant after March 31, 1994, a statement'' and adding ''A statement'' in its place.

7. Paragraph (e)(1)(vii) is removed.

8. Paragraph (e)(2)(ii), Certificate of Farming Use or State Use, is amended by adding or ''or kerosene'' after ''diesel fuel'' each place it appears.

9. Paragraph (g) is revised.

The revisions read as follows:

§ 48.6427–9 Diesel fuel and kerosene; claims by registered ultimate vendors (farming and State use).

(a) *Overview.* This section provides rules under which certain registered ultimate vendors of taxed diesel fuel and kerosene may claim the income tax credits or payments allowed by section 6427(l)(5)(A). These claims relate to diesel fuel and kerosene sold for use on a farm for farming purposes and by a State. Claims relating to diesel fuel and kerosene used for other nontaxable purposes are made by ultimate purchasers under § 48.6427–8; claims relating to kerosene sold from a blocked

pump are made by registered ultimate vendors (blocked pump) under § 48.6427–10; and claims relating to kerosene sold during certain periods of extreme cold for blending with diesel fuel to be used for heating purposes are made by registered ultimate vendors (blending) under § 48.6427–11.

(b) * * *

(2) A *registered ultimate vendor* is an ultimate vendor that is registered under section 4101 as an ultimate vendor.

(c) * * * A claim for an income tax credit or payment with respect to diesel fuel or kerosene is allowed by section 6427(l)(5)(A) only if—

(1) Tax was imposed by section 4081 on the diesel fuel or kerosene to which the claim relates;

(2) The claimant sold the diesel fuel or kerosene to—

* * * * *

(e) * * * (1) * * *

(i) The total number of gallons.

(ii) A statement by the claimant that—

(A) The diesel fuel or kerosene did not contain visible evidence of dye; or

(B) In the case of diesel fuel or kerosene that contains visible evidence of dye, explains the circumstances under which tax was imposed on that fuel.

* * * * *

(g) *Effective date.* This section is applicable with respect to diesel fuel after December 31, 1993, and with respect to kerosene after June 30, 1998.

Par. 62. Sections 48.6427–10 and 48.6427–11 are added to read as follows:

§ 48.6427–10 Kerosene; claims by registered ultimate vendors (blocked pumps).

(a) *Overview.* This section provides rules under which certain registered ultimate vendors of taxed kerosene may claim the income tax credits or payments allowed by section 6427(l)(5)(B)(i). These claims relate to kerosene sold from a blocked pump. Claims relating to kerosene sold for use on a farm for farming purposes and by a State are made by registered ultimate vendors under § 48.6427–9; claims relating to kerosene sold during certain periods of extreme cold for blending with diesel fuel to be used for heating purposes are made by registered ultimate vendors (blending) under § 48.6427–11; and claims relating to kerosene used for nontaxable purposes are made by ultimate purchasers under § 48.6427–8.

(b) *Definitions.* The following definitions apply to this section:

(1) A *blocked pump* is a fuel pump that—

(i) Is used to dispense undyed kerosene that is sold at retail for use by the buyer in any nontaxable use;

(ii) Is at a fixed location;

(iii) Is identified with a legible and conspicuous notice stating ''UNDYED UNTAXED KEROSENE, NONTAXABLE USE ONLY''; and

(iv)(A) Cannot reasonably be used to dispense fuel directly into the fuel supply tank of a diesel-powered highway vehicle or diesel-powered train (because, for example, of its distance from a road surface or train track or the length of its delivery hose); or

(B) Is locked by the vendor after each sale and unlocked by the vendor only in response to a request by a buyer for undyed kerosene for use other than as a fuel in a diesel-powered highway vehicle or diesel-powered train.

(2) A *registered ultimate vendor (blocked pump)* is a person that is registered under section 4101 as an ultimate vendor (blocked pump).

(3) An *ultimate vendor (blocked pump)* is a person that sells undyed kerosene from a blocked pump.

(c) *Conditions to allowance of credit or payment.* A claim for an income tax credit or payment with respect to undyed kerosene is allowed by section 6427(l)(5)(B)(i) only if—

(1) Tax was imposed by section 4081 on the kerosene to which the claim relates;

(2) The claimant sold the kerosene from a blocked pump for its buyer's use other than as a fuel in a diesel-powered highway vehicle or diesel-powered train and the claimant has no reason to believe that the kerosene will not be so used;

(3) The claimant is a registered ultimate vendor (blocked pump);

(4) With respect to each sale of more than five gallons of kerosene from a blocked pump that does not meet the conditions of paragraph (b)(1)(iv)(A) of this section, the claimant has in its possession the date of the sale, name and address of the buyer, and the number of gallons sold to the buyer; and

(5) The claimant has filed a timely claim for a credit or payment that contains the information required under paragraph (e) of this section.

(d) *Form of claim.* Each claim for an income tax credit under this section must be made on Form 4136 (or such other form as the Commissioner may designate) in accordance with the instructions for that form. Each claim for a payment under this section must be made on Form 8849 (or such other form as the Commissioner may designate) in accordance with the instructions for that form.

(e) *Content of claim.* Each claim for a credit or payment under this section must contain the following information with respect to all of the kerosene covered by the claim:

(1) The claimant's ultimate vendor (blocked pump) registration number.

(2) The total number of gallons.

(3) A statement by the claimant that—

(i) The kerosene did not contain visible evidence of dye; or

(ii) In the case of kerosene that contains visible evidence of dye, explains the circumstances under which tax was imposed on that kerosene.

(4) With respect to each sale of more than five gallons of kerosene from a blocked pump that does not meet the conditions of paragraph (b)(1)(iv)(A) of this section, a statement by the claimant that it has in its possession the date of the sale, name and address of the buyer, and the number of gallons sold to the buyer.

(5) A statement by the claimant that it—

(i) Has not included the amount of the tax in its sales price of the kerosene and has not collected the amount of the tax from its buyer;

(ii) Has repaid the amount of the tax to its buyer; or

(iii) Has obtained the written consent of its buyer to the allowance of the claim.

(f) *Time and place for filing claim.* For rules relating to the time for filing a claim under section 6427, see section 6427(i). A claim under this section is not filed unless it contains all the information required by paragraph (e) of this section and is filed at the place required by the form.

(g) *Cross reference.* For a rule prohibiting a registered ultimate vendor (blocked pump) from delivering kerosene from a blocked pump into the fuel supply tank of a diesel-powered highway vehicle or diesel-powered train, see § 48.4101–1(h)(2)(iv).

(h) *Effective date.* This section is applicable after March 30, 2000.

§ 48.6427–11 Kerosene; claims by registered ultimate vendors (blending).

(a) *Overview.* This section provides rules under which certain registered ultimate vendors of taxed kerosene may claim the income tax credits or payments allowed by section 6427(l)(5)(B)(ii). These claims relate to kerosene sold during certain periods of extreme cold for blending with diesel fuel to be used for heating purposes. Claims relating to kerosene sold for use on a farm for farming purposes and by a State are made by registered ultimate vendors under § 48.6427–9; claims relating to kerosene sold from a blocked

pump for nontaxable uses are made by registered ultimate vendors (blocked pump) under § 48.6427–10; and other claims relating to kerosene used for nontaxable purposes are made by ultimate purchasers under § 48.6427–8.

(b) *Definitions.* The following definitions apply to this section:

(1) A *declaration of extreme cold* is a declaration by the Commissioner that a specific geographic area (such as a state or a county within a state) is affected by extremely or unseasonably cold weather conditions. A declaration will be in effect during the period determined by the Commissioner.

(2) A *cold weather blend* is a blend of kerosene and diesel fuel that is produced in an area described in a declaration of extreme cold and that is sold for use or used for heating purposes.

(3) A *registered ultimate vendor (blending)* is a taxable fuel registrant, a registered ultimate vendor, or a registered ultimate vendor (blocked pump).

(c) *Conditions to allowance of credit or payment.* A claim for an income tax credit or payment with respect to kerosene is allowed by section 6427(l)(5)(B)(ii) only if—

(1) Tax was imposed by section 4081 on the kerosene to which the claim relates;

(2) The claimant sold the kerosene in an area described in a declaration of extreme cold for the production of a cold weather blend;

(3) The claimant is a registered ultimate vendor (blending); and

(4) The claimant has filed a timely claim for an income tax credit or payment that contains the information required under paragraph (e) of this section.

(d) *Form of claim.* Each claim for an income tax credit under this section must be made on Form 4136 (or such other form as the Commissioner may designate) in accordance with the instructions for that form. Each claim for a payment under this section must be made on Form 8849 (or such other form as the Commissioner may designate) in accordance with the instructions for that form.

(e) *Content of claim*—(1) *In general.* Each claim for credit or payment under this section must contain the following information with respect to all of the kerosene covered by the claim:

(i) The claimant's registration number.

(ii) The total number of gallons.

(iii) A statement by the claimant that—

(A) The kerosene did not contain visible evidence of dye; or

(B) In the case of kerosene that contains visible evidence of dye, explains the circumstances under which tax was imposed on that kerosene.

(iv) A statement by the claimant that it—

(A) Has not included the amount of the tax in its sales price of the kerosene and has not collected the amount of the tax from its buyer;

(B) Has repaid the amount of the tax to its buyer; or

(C) Has obtained the written consent of its buyer to the allowance of the claim.

(v) A statement that the claimant has in its possession an unexpired certificate described in paragraph (e)(2) of this section and the claimant has no reason to believe any information in the certificate is false.

(2) *Certificate*—(i) *In general.* The certificate described in this paragraph (e) is a statement by a buyer that is signed under penalties of perjury by a person with authority to bind the buyer, is in substantially the same form as the model certificate provided in paragraph (e)(2)(iii) of this section, and contains all information necessary to complete the model certificate. A certificate must be given for each purchase of kerosene. The certificate may be included as part of any business records normally used to document a sale.

(ii) *Withdrawal of the right to provide a certificate.* The Internal Revenue Service may withdraw the right of a buyer of kerosene to provide a certificate under this section if the buyer uses the kerosene to which a certificate relates other than for producing a cold weather blend. The Internal Revenue Service may notify any seller to whom the buyer has provided a certificate that the buyer's right to provide a certificate has been withdrawn.

(iii) *Model certificate.*

CERTIFICATE OF BUYER FOR PRODUCTION OF A COLD WEATHER BLEND

(To support vendor's claim for a credit or payment under section 6427 of the Internal Revenue Code.) Name of Buyer _____ (Buyer) certifies the following under penalties of perjury:

The kerosene to which this certificate applies will be used by Buyer to produce a blend of kerosene and diesel fuel in an area described in a declaration of extreme cold and the blend will be sold for use or used for heating purposes.

This certificate applies to _____ percent of Buyer's purchases from _____ (name, address, and employer identification number of seller) as follows (complete as applicable):

1. A single purchase on invoice or delivery ticket number _____.

2. All purchases between _____ (effective date) and _____ (expiration date) (period not to exceed one year after the effective date) under account or order number(s) _____. If this certificate applies only to Buyer's purchases for certain locations, check here _____ and list the locations.

_____

_____

_____

If Buyer violates the terms of this certificate, the Internal Revenue Service may withdraw Buyer's right to provide a certificate.

Buyer has not been notified by the Internal Revenue Service that its right to provide a certificate has been withdrawn.

Buyer understands that the fraudulent use of this certificate may subject Buyer and all parties making such fraudulent use of this certificate to a fine or imprisonment, or both, together with the costs of prosecution.

_____
Printed or typed name of person signing

_____
Title of person signing

_____
Name of Buyer

_____
Employer identification number

_____
Address of Buyer

_____
Signature and date signed

(f) *Time and place for filing claim.* For rules relating to the time for filing a claim under section 6427, see section 6427(i). A claim under this section is not filed unless it contains all the information required by paragraph (e) of this section and is filed at the place required by the form.

(g) *Effective date.* This section is applicable after March 30, 2000.

§§ 48.6427–10T and 48.6427–11T [Removed]

Par. 63. Sections 48.6427–10T and 48.6427–11T are removed.

§ 48.6715–1 [Amended]

Par. 64. Section 48.6715–1 is amended as follows:

1. The section heading is amended by removing the language ''diesel''.

2. Paragraph (a) is amended by adding ''or kerosene'' after ''diesel fuel'' in the following locations:

a. Paragraph (a)(1).

b. Paragraph (a)(2), each place it appears.

c. Paragraph (a)(4), each place it appears.

3. Paragraph (a)(4) is amended by removing the language ''§ 48.6427–8(b)(vi)(C), (D), or (E)'' and adding ''§ 48.6427–8(b)(1)(vii)(C) or (D)'' in its place.

PART 145—TEMPORARY EXCISE TAX REGULATIONS UNDER THE HIGHWAY REVENUE ACT OF 1982 (PUB. L. 97–424)

Par. 65. The authority citation for part 145 continues to read in part as follows:

Authority: 26 U.S.C. 7805 * * *

§ 145.4051–1 [Amended]

Par. 66. In § 145.4051–1, paragraph (f), the first sentence is removed.

Par. 67. Section 145.4052–1 is amended as follows:

1. Paragraph (a)(2)(ii) is revised.
2. Paragraph (a)(7) is removed.

The revision reads as follows:

§ 145.4052–1 Special rules and definitions.

(a) * * *

(2) * * *

(ii) [Reserved]. For sales after June 30, 1998, see § 48.4052–1 of this chapter.

* * * * *

PART 602—OMB CONTROL NUMBERS UNDER THE PAPERWORK REDUCTION ACT

Par. 68. The authority citation for part 602 continues to read as follows:

Authority: 26 U.S.C. 7805.

Par. 69. In § 602.101, paragraph (b) is amended by:

1. Removing the following entries from the table:

41.4481–1T
41.4482(b)–1T
48.4081–2(c)(3)
48.4081–3(d)(2)(iii)
48.4081–3(e)(2)(ii)
48.4081–3(f)(2)(ii)
48.4081–9
48.4082–7T
48.4082–8T
48.4091–3T
48.4101–2T
48.4101–3T
48.6420(c)–2
48.6420–7
48.6427–11T

2. Revising the entries for 48.4081–7 and 145.4052–1 and adding entries in numerical order to the table to read as follows:

§ 602.101 OMB Control numbers.

* * * * *

(b) * * *

CFR part or section where identified and described	Current OMB control No.
* * * * *	
48.4052–1	1545–1418
* * * * *	
48.4081–2	1545–1270 1545–1418
48.4081–3	1545–1270 1545–1418
* * * * *	
48.4081–7	1545–1270 1545–1418
* * * * *	
48.4082–6	1545–1418
48.4082–7	1545–1418
48.4091–3	1545–1418
* * * * *	
48.6427–10	1545–1418
48.6427–11	1545–1418
145.4052–1	1545–0120 1545–0745 1545–1076
* * * * *	

Robert E. Wenzel,

Deputy Commissioner of Internal Revenue.

Approved: March 15, 2000.

Jonathan Talisman,

Acting Assistant Secretary of the Treasury.

[FR Doc. 00–7351 Filed 3–30–00; 8:45 am]

BILLING CODE 4830–01–U

ENVIRONMENTAL PROTECTION AGENCY

40 CFR Part 52

[MO 099–1099; FRL–6568–8]

Approval and Promulgation of Implementation Plans; State of Missouri

AGENCY: Environmental Protection Agency (EPA).

ACTION: Final rule.

SUMMARY: EPA is taking final action to approve a revision to the Missouri State Implementation Plan (SIP). This action approves a revision to Missouri's fugitive dust rule. This action also responds to comments submitted during the public comment period for the proposed approval action published on May 28, 1999. This action makes the state rule Federally enforceable.

DATES: This rule is effective on May 1, 2000.

ADDRESSES: Copies of the state submittals are available at the following address for inspection during normal business hours: Environmental Protection Agency, Air Planning and Development Branch, 901 North 5th Street, Kansas City, Kansas 66101.

FOR FURTHER INFORMATION CONTACT: Wayne Kaiser at (913) 551–7603.

SUPPLEMENTARY INFORMATION: Throughout this document whenever ''we, us, or our'' is used, we mean EPA. This section provides additional information by addressing the following questions:

What is a SIP?
What is the Federal approval process for a SIP?
What does Federal approval of a state regulation mean to me?
What is being addressed in this action?
Have the requirements for approval of a SIP revision been met?
What action is EPA taking?

I. Background

What Is a SIP?

Section 110 of the Clean Air Act (CAA) requires states to develop air pollution regulations and control strategies to ensure that state air quality meets the national ambient air quality standards established by EPA. These ambient standards are established under section 109 of the CAA, and they currently address six criteria pollutants. These pollutants are: Carbon monoxide, nitrogen dioxide, ozone, lead, particulate matter, and sulfur dioxide.

Each state must submit these regulations and control strategies to EPA for approval and incorporation into the Federally enforceable SIP.

Each Federally approved SIP protects air quality primarily by addressing air pollution at its point of origin. These SIPs can be extensive, containing state regulations or other enforceable documents and supporting information such as emission inventories, monitoring networks, and modeling demonstrations.

What Is the Federal Approval Process for a SIP?

In order for state regulations to be incorporated into the Federally enforceable SIP, states must formally adopt the regulations and control strategies consistent with state and Federal requirements. This process generally includes a public notice, public hearing, public comment period, and a formal adoption by a state-authorized rulemaking body.

Once a state rule, regulation, or control strategy is adopted, the state submits it to EPA for inclusion into the SIP. EPA must provide public notice and seek additional public comment regarding the proposed Federal action on the state submission. If adverse comments are received, they must be addressed prior to any final Federal action by EPA.

All state regulations and supporting information approved by EPA under section 110 of the CAA are incorporated

into the Federally approved SIP. Records of such SIP actions are maintained in the Code of Federal Regulations (CFR) at Title 40, Part 52, entitled ''Approval and Promulgation of Implementation Plans.'' The actual state regulations which are approved are not reproduced in their entirety in the CFR outright but are ''incorporated by reference,'' which means that EPA has approved a given state regulation with a specific effective date.

What Does Federal Approval of a State Regulation Mean to Me?

Enforcement of the state regulation before and after it is incorporated into the Federally approved SIP is primarily a state responsibility. However, after the regulation is Federally approved, EPA is authorized to take enforcement action against violators. Citizens are also offered legal recourse to address violations as described in the CAA.

What Is Being Addressed in This Document?

EPA is taking final action to approve a revision to the Missouri fugitive dust rule, 10 CSR 10–6.170, Restriction of Particulate Matter to the Ambient Air Beyond the Premises of Origin. EPA proposed approval of this revision in 64 FR 28947 (May 28, 1999). The revision exempts from the rule certain fugitive emissions which occur under circumstances which are deemed by Missouri to be ''adverse weather conditions'' as described in the rule.

EPA received comments from two commenters on the proposal. One commenter represents the Missouri Ag Industries Council, and the other represents the Missouri Limestone Producers Association. One of the comment letters was received after the close of the comment period. However, since the comments are nearly identical, EPA is responding to the issues raised by both commenters.

Both commenters stated that they supported the revision to Missouri's fugitive dust rule to provide for the exemption which is the subject of this rulemaking. However, the commenters stated that they do not believe that the Missouri fugitive dust rule should be included in the Missouri SIP, primarily based on the argument that the emission reductions attributable to the rule cannot be quantified, and that reductions due to the rule would be insignificant.

The objections to the underlying rule raised by the commenters involve issues which are not the subject of this rulemaking. EPA first approved the Missouri rule in 1972, and has approved various revisions to the rule since that time. In fact, the commenters raised issues similar to those raised in connection with this rulemaking, in a recent EPA rulemaking on prior state revisions to the fugitive dust rule, and EPA provided responses to those comments in connection with that rulemaking. See 63 FR 3037 (January 21, 1998). The commenters petitioned the U.S. Court of Appeals for the Eighth Circuit for review of the 1998 rulemaking, although the commenters elected not to litigate these specific arguments, and the Court denied the petition. See *Missouri Limestone Producers Ass'n* v. *Browner*, 165 F. 3d 619 (8th Cir. 1999).

The scope of today's action is limited to approval of Missouri's revision to the fugitive dust rule to add the exemption discussed above in this notice. Issues relating to the underlying rule are not relevant to this action and have previously been adequately addressed by EPA in a prior rulemaking. This approval does not reopen any aspects of the underlying rule.

Have the Requirements for Approval of a SIP Revision Been Met?

The state submittal has met the public notice requirements for SIP submissions in accordance with 40 CFR 51.102. The submittal also satisfied the completeness criteria of 40 CFR Part 51, Appendix V. In addition, the revision meets the substantive SIP requirements of the CAA, including section 110 and implementing regulations as explained in detail in the notice of proposed rule making published May 28, 1999.

What Action Is EPA Taking?

EPA is taking final action to approve a revision to the Missouri SIP. EPA is approving Missouri revised rule 10 CSR 10–6.170, submitted by the Director of the Missouri Department of Natural Resources on November 13, 1998, with a state effective date of August 30, 1998. This action makes the state rule Federally enforceable and ensures consistency between the state rules and the Federally approved SIP.

Administrative Requirements

Under Executive Order 12866 (58 FR 51735, October 4, 1993), this action is not a ''significant regulatory action'' and therefore is not subject to review by the Office of Management and Budget. This action merely approves state law as meeting Federal requirements and imposes no additional requirements beyond those imposed by state law. Accordingly, the Administrator certifies that this rule will not have a significant economic impact on a substantial number of small entities under the Regulatory Flexibility Act (5 U.S.C. 601 *et seq.*). Because this rule approves preexisting requirements under state law and does not impose any additional enforceable duty beyond that required by state law, it does not contain any unfunded mandate or significantly or uniquely affect small governments, as described in the Unfunded Mandates Reform Act of 1995 (Pub. L. 104–4). For the same reason, this rule also does not significantly or uniquely affect the communities of tribal governments, as specified by Executive Order 13084 (63 FR 27655, May 10, 1998). This rule will not have substantial direct effects on the states, on the relationship between the national government and the states, or on the distribution of power and responsibilities among the various levels of government, as specified in Executive Order 13132 (64 FR 43255, August 10, 1999), because it merely approves a state rule implementing a Federal standard, and does not alter the relationship or the distribution of power and responsibilities established in the CAA. This rule also is not subject to Executive Order 13045 (62 FR 19885, April 23, 1997), because it is not economically significant.

In reviewing SIP submissions, EPA's role is to approve state choices, provided that they meet the criteria of the CAA. In this context, in the absence of a prior existing requirement for the state to use voluntary consensus standards (VCS), EPA has no authority to disapprove a SIP submission for failure to use VCS. It would thus be inconsistent with applicable law for EPA, when it reviews a SIP submission, to use VCS in place of a SIP submission that otherwise satisfies the provisions of the CAA. Thus, the requirements of section 12(d) of the National Technology Transfer and Advancement Act of 1995 (15 U.S.C. 272 note) do not apply. As required by section 3 of Executive Order 12988 (61 FR 4729, February 7, 1996), in issuing this rule, EPA has taken the necessary steps to eliminate drafting errors and ambiguity, minimize potential litigation, and provide a clear legal standard for affected conduct. EPA has complied with Executive Order 12630 (53 FR 8859, March 15, 1988) by examining the takings implications of the rule in accordance with the ''Attorney General's Supplemental Guidelines for the Evaluation of Risk and Avoidance of Unanticipated Takings'' issued under the Executive Order. This rule does not impose an information collection burden under the provisions of the Paperwork Reduction Act of 1995 (44 U.S.C. 3501 *et seq.*).

The Congressional Review Act, 5 U.S.C. section 801 *et seq.*, as added by the Small Business Regulatory Enforcement Fairness Act of 1996, generally provides that before a rule may take effect, the agency promulgating the rule must submit a rule report, which includes a copy of the rule, to each House of the Congress and to the Comptroller General of the United States. EPA will submit a report containing this rule and other required information to the United States Senate, the United States House of Representatives, and the Comptroller General of the United States prior to publication of the rule in the **Federal Register**. A major rule cannot take effect until 60 days after it is published in the **Federal Register**. This action is not a ''major rule'' as defined by 5 U.S.C. section 804(2).

Under section 307(b)(1) of the CAA, petitions for judicial review of this action must be filed in the United States Court of Appeals for the appropriate circuit by May 31, 2000. Filing a petition for reconsideration by the Administrator of this final rule does not affect the finality of this rule for the purposes of judicial review nor does it extend the time within which a petition for judicial review may be filed, and shall not postpone the effectiveness of such rule or action. This action may not be challenged later in proceedings to enforce its requirements. (See section 307(b)(2).)

List of Subjects in 40 CFR Part 52

Environmental protection, Air pollution control, Incorporation by reference, Intergovernmental relations, Particulate matter.

Dated: March 17, 2000.

William Rice,

Acting Regional Administrator Region 7.

Chapter I, title 40 of the Code of Federal Regulations is amended as follows:

PART 52—[AMENDED]

1. The authority citation for part 52 continues to read as follows:

Authority: 42 U.S.C. 7401 *et seq.*

Subpart AA—Missouri

2. In § 52.1320 the table in paragraph (c) is amended by revising the entry for 10–6.170, under Chapter 6, to read as follows:

§ 52.1320 Identification of plan.

* * * * *

(c) * * *

EPA-APPROVED MISSOURI REGULATIONS

Missouri citation	Title	State effective date	EPA approval date	Explanation
	Missouri Department of Natural Resources			
*	*	*	*	*
Chapter 6—Air Quality Standards, Definitions, Sampling and Reference Methods, and Air Pollution Control Regulations for the State of Missouri				
*	*	*	*	*
10–6.170	Restriction of Particulate Matter to the Ambient Air Beyond the Premises of Origin.	August 30, 1998	65 FR 17166 and March 31, 2000.	
*	*	*	*	*

[FR Doc. 00–7881 Filed 3–30–00; 8:45 am]

BILLING CODE 6560–50–P

ENVIRONMENTAL PROTECTION AGENCY

40 CFR Part 130

[FRL–6569–7]

Revision to the Water Quality Planning and Management Regulation Listing Requirements

AGENCY: Environmental Protection Agency.

ACTION: Final rule.

SUMMARY: The Environmental Protection Agency (EPA) is revising the Water Quality Planning and Management regulation to remove the requirement in most cases that States, Territories and authorized Tribes submit to EPA for review by April 1, 2000, lists of water quality limited waterbodies. EPA's current regulations interpret the provision in section 303(d) of the Clean Water Act for submission of lists to EPA ''from time to time'' to require States, Territories and authorized Tribes to submit lists on April 1 of every even-numbered year. EPA is not, however, changing the existing requirement to submit a list in 2000 if a court order or consent decree, or commitment in a settlement agreement dated prior to January 1, 2000, expressly requires EPA to take action related to a State's, Territory's, or authorized Tribe's year 2000 list. Also, EPA is not at this time changing the existing regulatory requirement that subsequent lists be submitted on April 1, 2002, and on April 1 of subsequent even numbered years.

EFFECTIVE DATE: March 31, 2000.

ADDRESSES: This rule's administrative record is available for review and copying from 9:00 to 4:00 p.m., Monday through Friday, excluding legal holidays, at the Water Docket (W–99–25), East Tower Basement, Room EB–57, U.S. Environmental Protection Agency, 401 M Street, SW, Washington, DC 20460. The administrative record includes a Response to Comments document which includes a response to all timely comments that EPA received on the proposal for this rule. For access to materials, please call (202) 260–3027 to schedule an appointment.

FOR FURTHER INFORMATION CONTACT: James Pendergast, U.S. EPA, Office of Wetlands, Oceans and Watersheds (4503F), 1200 Pennsylvania Ave., NW., Washington, DC 20640, (202) 260–9549.

SUPPLEMENTARY INFORMATION:

Authority: Clean Water Act Section 303.

I. Potentially Regulated Entities

Category	NAIAS codes	SIC codes	Examples of potentially regulated entities
State, Local, Tribal Government	N/A	N/A	States, Territories, and authorized Tribes.

This table is not intended to be exhaustive, but rather provides a guide for readers regarding entities likely to be regulated by this action. This table lists the types of entities that EPA is now aware could potentially be regulated by this action. Other types of entities not listed in the table could also be regulated. To determine whether you are regulated by this action, you should carefully examine the applicability criteria in § 130.1 of title 40 of the Code of Federal Regulations. If you have questions regarding the applicability of this action to you, please consult the person listed in the **FOR FURTHER INFORMATION CONTACT** section.

II. Background

A. Existing Requirement

Section 303(d)(1) of the CWA requires States, Territories and authorized Tribes to submit to EPA ''from time to time'' a list of waterbodies for which existing pollution effluent limitations are not stringent enough to attain and maintain State, Territorial and authorized Tribal water quality standards. The statute requires EPA to review and approve or disapprove the lists within 30 days of the time they are submitted. If EPA disapproves a list, EPA must establish the list for the State, Territory or authorized Tribe.

In 1992, EPA revised the regulations implementing section 303(d)(1) to require States, Territories, and authorized Tribes to submit lists of water quality limited waterbodies to EPA every two years, with the 1992 lists due to EPA no later than October 22, 1992, and subsequent lists due on April 1 of even-numbered years. The most recent listing deadline was April 1, 1998, and all States, Territories, and authorized Tribes have now submitted 1998 section 303(d) lists to EPA. As of March 2000, EPA had approved all but one list.

B. Proposed Rule

On February 2, 2000, EPA proposed to eliminate the regulatory requirement that States, Territories, and authorized Tribes submit to EPA by April 1, 2000, their lists of water quality limited waterbodies, unless EPA has been required by a court order or consent decree, or commitment in a settlement agreement to take action based on a year 2000 list. (EPA used the term ''impaired and threatened'' in the proposal; however the precise term from the current regulations is ''water quality limited.'') This proposed rule was published in the **Federal Register** on February 2, 2000, with a 30 day comment period. The public comments are available for review in the Water Docket, Room EB–57 (East Tower Basement), 401 M Street, SW, Washington, DC 20460.

The February 2, 2000, proposal only affected the April 1, 2000, list; it retained the existing regulatory requirement that subsequent lists be submitted on April 1, 2002, and on April 1 of subsequent even-numbered years. EPA proposed applying the changed regulation to instances where EPA has been required by a court order or consent decree, or commitment in a settlement agreement to take action based on a State's, Territory's or authorized Tribe's year 2000 list. EPA made this proposal to avoid unsettling a commitment embodied in documents filed in or entered by a court.

C. Comments Sought

EPA sought comments in the proposal on whether to eliminate the April 1, 2000, listing deadline in light of the comprehensive improvements and clarifications proposed to the existing listing requirements on August 23, 1999 (see 64 FR 46012). EPA also requested comments on whether to move the April 2000 list submission date to another date prior to April 2002. EPA also requested comments on whether to include in the final rule the limited exception which would require a State, Territory, and authorized Tribe to submit a list in the year 2000 only if a court order or consent decree dated prior to January 1, 2000, expressly requires (or if a similarly dated settlement agreement committed) EPA to take action related to that year 2000 list. Finally, EPA sought comments on whether it should promulgate in this rule the requirements for removing a waterbody from the section 303(d) list that EPA proposed on August 23, 1999.

III. Summary of Final Rule

A. Removing the Requirement To Submit the April 1, 2000, List

EPA is today amending its regulations at 40 CFR 130.7(d)(1) to remove the requirement that States, Territories, and authorized Tribes submit a section 303(d) list by April 1, 2000. After review of comments, EPA still believes that its reasons for removing the year 2000 list, as proposed, are valid. Many comments supported the proposal by pointing out that States need additional resources to establish the large numbers of TMDLs required by the 1998 list. Three States noted that the rule would have no effect on them because they would submit a list by April 2000; however, these States did not oppose the rule. Of the comments opposing the proposal, all but two supported the proposal on the condition that EPA simultaneously promulgate regulations to require that a waterbody attain water quality standards before it can be removed from the list. Two other comments opposing the rule suggested that most States would have already developed the information for a year 2000 list and thus there would be no savings in resources to redirect towards TMDL development. However, of the 32 States submitting (or joining with submitted) comments, only three said they had developed the information for a year 2000 section 303(d) list. Another comment noted the value of an updated list for citizens to use to highlight where environmental problems require more attention. EPA recognizes this value of the section 303(d) lists, but does not believe it outweighs the benefit of affording States, Territories, and authorized Tribes flexibility to make further progress in establishing TMDLs on already-listed waterbodies instead of submitting the section 303(d) list in the year 2000. Two comments questioned whether States would actually use the additional time to collect and analyze data for the next section 303(d) list. EPA notes that a comment submitted by a State specifically discussed using the time to evaluate biological information that would otherwise have been directed towards preparing a year 2000 list. Another State comment pointed to the data collection efforts it had underway.

One comment opposing the proposal claimed it was contrary to Congressional intent that all TMDLs be established prior to the Clean Water Act requirement that effluent limitations attain water quality standards by July 1, 1977. EPA disagrees with the assertion that the Clean Water Act required all TMDLs be established by July 1, 1977. Regardless, this assertion is irrelevant to EPA's decision to remove the requirement (codified by EPA by regulation in 1992) that States, Territories and authorized Tribes submit a section 303(d) list in the year 2000.

Nevertheless, EPA recognizes the statements in the Congressional Record and that section 301 of the Clean Water Act cited by the commenter indicates that certain benchmarks should be met by July 1, 1977. EPA notes, however, that section 301 applies to effluent limitations whereas section 303 applies to TMDLs. Furthermore, EPA has stated previously that water quality based effluent limits can be set in the absence of a TMDL. 43 FR 60664. To codify this, EPA has published National Pollutant Discharge Elimination System (NPDES) regulations that clearly require NPDES permit authorities to ensure that effluent limitations are derived from and comply with all applicable water quality standards; this requirement does not depend on whether there exists an applicable TMDL. 54 FR 23879.

Another comment claimed that persons with interests in impaired but unlisted waterbodies receive no benefits if a State delays listing their waterbody in lieu of establishing a TMDL for another water. EPA believes that establishing TMDLs speeds up the process towards attaining water quality standards, which is the underlying principal of the Clean Water Act. Thus, EPA believes that the overall interests of residents will be better served if States, Territories, and authorized Tribes focus their efforts on establishing TMDLs before the next section 303(d) list is due.

EPA received comments suggesting that EPA should take action on lists that States, Territories, and authorized Tribes voluntarily submit by April 2000 or thereafter. EPA also received one comment requesting that EPA take no action on a section 303(d) list that a State may submit in the year 2000. EPA interprets section 303(d) to require EPA to review and either approve or disapprove a final section 303(d) list whenever submitted by a State, Territory, or authorized Tribe.

EPA received only four comments on its proposal to require a year 2000 list where EPA has been required by a court order or consent decree, or commitment in a settlement agreement to take action based on a year 2000 list. Two comments supported this. The other two suggested that EPA condition this requirement to where it is infeasible to amend the court order or consent decree, or commitment in a settlement agreement. When EPA published the proposal, EPA stated that it believed that this provision would only apply to the State of Georgia and solicited comment on whether this would apply to others. EPA received no comment or information identifying any other State. EPA continues to believe that a State, Territory, and authorized Tribe should submit a section 303(d) list if a court order or consent decree, or commitment in a settlement agreement dated prior to January 1, 2000, expressly requires EPA to take action related to that year 2000 list. Therefore, EPA is promulgating this regulation as proposed. Information available to EPA indicates that this requirement only affects Georgia. EPA understands that Georgia intends to submit a list in the year 2000.

EPA received several comments suggesting dates on which States, Territories, and authorized Tribes should be required to submit the next section 303(d) list. After reviewing those comments, and considering the fact that EPA intends to publish the final rules for the TMDL program fairly soon, EPA will establish the date for the next 303(d) list when the final TMDL rules are published. Until then, the date for the next list is April 1, 2002.

EPA received many comments discussing whether EPA should require in this final rule that a State must keep each impaired waterbody on the list until water quality standards are attained for that waterbody and may remove a previously listed impaired waterbody only if new data or information indicates that the waterbody has attained water quality standards. Many comments asked that EPA make this change in this rule and roughly an equal number of comments opposed making this change now instead as of part of the revisions to the Water Quality Planning and Management Regulation later. After reviewing those comments, and considering the fact that EPA intends to publish the final rules for the TMDL program fairly soon, EPA has decided to not take action on this issue in today's final rule. EPA believes that it can better consider the aspects of this issue in conjunction with decisions on the other issues that were proposed in the August 23, 1999 proposal. This belief is consistent with the recommendation of the Federal Advisory Committee Act (FACA) Committee report on page 9 that cautioned readers of the report to not take individual recommendations out of context because many recommendations are interrelated. Because EPA relied on the FACA Committee report for many of the elements of the August 23, 1999, proposal, EPA believes it is better to consider the issue of criteria for removing a waterbody from the section 303(d) list in conjunction with the other elements of the August 23, 1999, proposal.

As stated in the proposal to this rule, EPA intends to carefully review any proposed removal of a waterbody from a section 303(d) list to ensure there is information specific to the waterbody to support the removal. 65 FR 4921. In particular, where a waterbody was previously listed based on certain data or information, and the State removes the waterbody without developing or obtaining any new information, EPA will carefully evaluate the State's re-evaluation of the available information, and would not approve such removals unless the State's submission describes in detail why it is appropriate under the current regulations to remove each affected waterbody. EPA has the authority to disapprove the list if EPA identifies existing and readily available information that was existing and readily available at the time the State submitted the list and that data shows that a waterbody does not attain water quality standards.

B. Other Comments

EPA received comments on other issues germane only to the August 23, 1999, proposal and for which EPA did not solicit comment in the February 2, 2000, proposal. EPA is deferring decision on those issues until the time when EPA publishes the final rule for the comprehensive TMDL program.

C. Effective Date of the Final Rule

EPA has decided to make this rule effective upon publication. The Administrative Procedure Act allows the effective date of a rule to be less than 30 days from the publication. 5 U.S.C. 553(d)(1)–(3). Section 553(d)(1) allows the effective date to be less than 30 days from the publication date if the rule grants an exemption or relieves a restriction. EPA believes that the part of this rule that removes the obligation that States, Territories, and authorized Tribes submit section 303(d) lists for the year 2000 satisfies section 553(d)(1). Because it relieves an obligation for a list submission on April 1, 2000, EPA believes the rule should be effective before that date. Furthermore, section 553(d)(3) allows the effective date to be less than 30 days from the publication date for good cause if the agency expresses the reasons and publishes them with the rule.

IV. Regulatory Assessment Requirements

A. Regulatory Flexibility Act (RFA), as Amended by the Small Business Regulatory Enforcement Fairness Act of 1996 (SBREFA), 5 U.S.C. 601 et seq.

RFA generally requires an agency to prepare a regulatory flexibility analysis of any rule subject to notice and comment rulemaking requirements under the Administrative Procedure Act

or any other statute unless the agency certifies that the rule will not have a significant economic impact on a substantial number of small entities. Small entities include small businesses, small organizations, and small governmental jurisdictions. For purposes of assessing the impacts of today's rule on small entities, a small entity is defined as: (1) A small business according to the RFA default definition for small business (based on the Small Business Administration size standards); (2) a small governmental jurisdiction that is a government of a city, county, town, school district or special district with a population of less than 50,000; (3) a small organization that is any not-for-profit enterprise which is independently owned and operated and is not dominant in its field. For purposes of the RFA, States, Territories and tribal governments are not considered small governments jurisdictions since they are independent sovereigns.

The RFA requires analysis of the impacts of a rule on the small entities *subject to the rule's requirements*. See *United States Distribution Companies* v. *FERC*, 88 F.3d 1105, 1170 (D.C.Cir. 1996); *Mid-Tex Electric Co-op., Inc.* v. *FERC*, 773 F.2d 327 (D.C. Cir. 1985); *Motor & Equipment Manufacturers Ass'n* v. *Nichols*, 142 F.3d 449 (D.C. Cir. 1998). Today's rule establishes requirements for only States, Territories and authorized Tribes. It establishes no requirements applicable to small entities, and so is not susceptible to regulatory flexibility analysis as prescribed by the RFA. ''[N]o [regulatory flexibility] analysis is necessary when an agency determines that the rule will not have a significant economic impact on a substantial number of small entities that are subject to the requirements of the rule.'' *United Distribution* at 1170, quoting *Mid-Tex Elec. Co-op., Inc.* v. *FERC*, 773 F.2d 327, 342 (D.C. Cir. 1985) (emphasis added by *United Distribution* court). After considering the economic impacts of today's final rule on small entities, I certify that this action will not have a significant economic impact on a substantial number of small entities.

This final rule will not impose any requirements on small entities. It eliminates the current regulatory requirement which directs States, Territories and authorized Tribes (and EPA, if it disapproves the State's, Territory's or authorized Tribe's efforts) to establish lists of impaired waterbodies in the year 2000.

B. Executive Order 12866

Under Executive Order 12866 (58 FR 51735, October 4, 1993), EPA must determine whether the regulatory action is ''significant'' and therefore subject to Office of Management and Budget (OMB) review and the requirements of the Executive Order. The Order defines ''significant regulatory action'' as one that is likely to result in a rule that may:

(1) Have an annual effect on the economy of $100 million or more or adversely affect in a material way the economy, a sector of the economy, productivity, competition, jobs, the environment, public health or safety, or State, local, or tribal governments or communities;

(2) Create a serious inconsistency or otherwise interfere with an action taken or planned by another agency;

(3) Materially alter the budgetary impact of entitlements, grants, user fees, or loan programs or the rights and obligations of recipients thereof; or

(4) Raise novel legal or policy issues arising out of legal mandates, the President's priorities, or the principles set forth in the Executive Order.

It has been determined that this final rule is not a ''significant regulatory action'' under the terms of Executive Order 12866 and is therefore not subject to OMB review.

C. Unfunded Mandates Reform Act

Title II of the Unfunded Mandates Reform Act of 1995 (UMRA), Public Law 104–4, establishes requirements for Federal agencies to assess the effects of their regulatory actions on State, local, and tribal governments and the private sector. Under section 202 of the UMRA, EPA generally must prepare a written statement, including a cost-benefit analysis, for proposed and final rules with ''Federal Mandates'' that may result in expenditures to State, local, and tribal governments, in the aggregate, or to the private sector, of $100 million or more in any one year. Before promulgating an EPA rule for which a written statement is needed, section 205 of the UMRA generally requires EPA to identify and consider a reasonable number of regulatory alternatives and adopt the least costly, most cost-effective or least burdensome alternative that attains the objectives of the rule. The provisions of section 205 do not apply when they are inconsistent with applicable law. Moreover, section 205 allows EPA to adopt an alternative other than the least costly, most cost-effective or least burdensome alternative if the Administrator publishes with the rule an explanation why that alternative was not adopted. Before EPA establishes any regulatory requirements that may significantly or uniquely affect small governments, including tribal governments, it must have developed under section 203 of the UMRA a small government agency plan. The plan must provide for notifying potentially affected small governments, enabling officials of affected small governments to have meaningful and timely input in the development of EPA regulatory proposals with significant Federal intergovernmental mandates, and informing, educating, and advising small governments on compliance with the regulatory requirements.

Today's final rule contains no Federal mandates (under the regulatory provisions of Title II of the UMRA) for State, local, and tribal governments or the private sector. The final rule imposes no enforceable duty on any State, local, or tribal governments or the private sector. The final rule is deregulatory because it eliminates the current regulatory requirement that States, Territories, and authorized Tribes submit lists of impaired waterbodies in 2000. Thus, today's final rule is not subject to the requirements of section 202 and 205 of UMRA.

For the same reasons discussed in the section on the Regulatory Flexibility Act, EPA has determined that this final rule contains no regulatory requirements that might significantly or uniquely affect small governments. Thus, today's final rule is not subject to the requirements of section 203 of UMRA.

D. Paperwork Reduction Act

This final rule does not contain any information collection, reporting, or record keeping requirements. Thus, this final rule is not subject to the Paperwork Reduction Act, 44 U.S.C. 3501 *et seq.* This final rule could actually streamline and reduce existing OMB-approved requirements by 25,424 hours in the year 2000.

E. Executive Order 13132: Federalism

Executive Order 13132, entitled ''Federalism'' (64 FR 43255, August 10, 1999) requires EPA to develop an accountable process to ensure ''meaningful and timely input by State and local officials in the development of regulatory policies that have federalism implications.'' ''Policies that have federalism implications'' is defined in the Executive Order to include regulations that have ''substantial direct effects on the States, on the relationship between the national government and the States, or on the distribution of power and responsibilities among the various levels of government.''

Under section 6 of Executive Order 13132, EPA may not issue a regulation that has federalism implications, that imposes substantial direct compliance

costs, and that is not required by statute, unless the federal government provides the funds necessary to pay the direct compliance costs incurred by State and local governments, or EPA consults with State and local officials early in the process of developing the proposed regulation. EPA also may not issue a regulation that has federalism implications and that preempts State law, unless EPA consults with State and local officials early in the process of developing the proposed regulation.

This final rule does not have federalism implications. It will not have substantial direct effects on the States, on the relationship between the national government and the States, or on the distribution of power and responsibilities among the various levels of government, as specified in Executive Order 13132. As discussed above, the final rule that removes the obligation that States, Territories, and authorized Tribes submit a section 303(d) list is deregulatory because it eliminates a current requirement. Thus, the requirements of section 6 of the Executive Order do not apply to this final rule.

F. Executive Order 13084: Consultation and Coordination With Indian Tribal Governments

Under Executive Order 13084, EPA may not issue a regulation that is not required by statute, that significantly or uniquely affects the communities of Indian tribal governments, and that imposes substantial direct compliance costs on those communities, unless the Federal government provides the funds necessary to pay the direct compliance costs incurred by the tribal governments, or EPA consults with those governments. If EPA complies by consulting, Executive Order 13084 requires EPA to provide to OMB, in a separately identified section of the preamble to the rule, a description of the extent of EPA's prior consultation with representatives of affected tribal governments, a summary of the nature of their concerns, and a statement supporting the need to issue the regulation. In addition, Executive Order 13084 requires EPA to develop an effective process permitting elected and other representatives of Indian tribal governments ''to provide meaningful and timely input in the development of regulatory policies on matters that significantly or uniquely affect their communities.''

Today's final rule does not significantly or uniquely affect the communities of Indian tribal governments nor does it impose substantial direct compliance costs on them. Currently, there are no tribes authorized to establish TMDLs or lists of impaired waterbodies. Accordingly, the requirements of section 3(b) of Executive Order 13084 do not apply to today's final rule.

G. Executive Order 13045: Protection of Children From Environmental Health Risks and Safety Risks

Executive Order 13045 (62 FR 19885, April 23, 1997) applies to any rule that: (1) is determined to be ''economically significant'' as defined under Executive Order 12866, and (2) concerns an environmental health or safety risk that EPA has reason to believe may have a disproportionate effect on children. If the regulatory action meets both criteria, the EPA must evaluate the environmental health or safety effects of the planned rule on children, and explain why the planned regulation is preferable to other potentially effective and reasonably feasible alternatives considered by the Agency. This final rule is not subject to Executive Order 13045 because it is not ''economically significant'and further, it does not establish an environmental standard intended to mitigate health or safety risks.

H. National Technology Transfer and Advancement Act

As noted in the proposed rule, Section 12(d) of the National Technology Transfer and Advancement Act of 1995 (NTTAA), Public Law 104–113, section 12(d)(15 U.S.C. 272 note) directs EPA to use voluntary consensus standards in its regulatory activities unless to do so would be inconsistent with applicable law or otherwise impractical. Voluntary consensus standards are technical standards (*e.g.,* materials specifications, test methods, sampling procedures, and business practices) that are developed or adopted by voluntary consensus standards bodies. The NTTAA directs EPA to provide Congress, through OMB, explanations when the Agency decides not to use available and applicable voluntary consensus standards.

This final rule does not involve any technical standards. Therefore, EPA did not consider the use of any voluntary consensus standards.

I. Congressional Review Act

The Congressional Review Act, 5 U.S.C. 801 *et seq.*, as added by the Small Business Regulatory Enforcement Fairness Act of 1996, generally provides that before a rule may take effect, the agency promulgating the rule must submit a rule report, which includes a copy of the rule, to each House of the Congress and to the Comptroller General of the United States. EPA will submit a report containing this rule and other required information to the U.S. Senate, the U.S. House of Representatives, and the Comptroller General of the United States prior to publication of the rule in the **Federal Register**. A major rule cannot take effect until 60 days after it is published in the **Federal Register**. This action is not a ''major rule'' as defined by 5 U.S.C. 804(2). This rule will be effective March 31, 2000, for reasons discussed previously in this preamble.

List of Subjects in 40 CFR Part 130

Environmental protection, Intergovernmental relations, Reporting and recordkeeping requirements, Water pollution control.

Dated: March 27, 2000.

Carol M. Browner,

Administrator.

For the reasons set out in the preamble, EPA is amending title 40, chapter I of the Code of Federal Regulations as follows:

PART 130—[AMENDED]

1. The authority citation for part 130 continues to read as follows:

Authority: 33 U.S.C. 1251 *et seq.*

2. Amend Section 130.7 by adding a new sentence after the third sentence in paragraph (d)(1) as follows:

§ 130.7 Total maximum daily loads (TMDL) and individual water quality-based effluent limitations.

* * * * *

(d) * * * (1) * * * For the year 2000 submission, a State must submit a list required under paragraph (b) of this section only if a court order or consent decree, or commitment in a settlement agreement dated prior to January 1, 2000, expressly requires EPA to take action related to that State's year 2000 list. * * *

* * * * *

[FR Doc. 00–7986 Filed 3–30–00; 8:45 am]

BILLING CODE 6560–50–P

ENVIRONMENTAL PROTECTION AGENCY

40 CFR Part 180

[OPP–300986; FRL–6498–1]

2070–AB78

Glufosinate Ammonium; Pesticide Tolerance

AGENCY: Environmental Protection Agency (EPA).

ACTION: Final rule.

SUMMARY: This regulation establishes tolerances for combined residues of glufosinate ammonium (butanoic acid, 2-amino-4-(hydroxymethylphosphinyl)-mono ammonium salt) and metabolites (3-methylphosphinico-propionic acid and 2-acetamido-4-methylphosphinico-butanoic acid), expressed as 2-amino-4-(hydroxymethylphosphinyl) butanoic acid equivalents in or on transgenic canola meal and seed and trangenic sugar beet molasses, roots and tops. AgrEvo USA Company requested these tolerances under the Federal Food, Drug, and Cosmetic Act, as amended by the Food Quality Protection Act of 1996. Revoked/expired tolerances under § 180.473 (b) are deleted from the regulation.

DATES: This regulation is effective March 31, 2000. Objections and requests for hearings, identified by docket control number OPP–300986, must be received by EPA on or before May 30, 2000.

FOR FURTHER INFORMATION CONTACT: By mail: Joanne I. Miller, Registration Division (7505C), Office of Pesticide Programs, Environmental Protection Agency, Ariel Rios Bldg., 1200 Pennsylvania Ave., NW., Washington, DC 20460; telephone number: (703) 305–6224 and e-mail address: miller.joanne@epa.gov.

SUPPLEMENTARY INFORMATION:

I. General Information

A. Does this Action Apply to Me?

You may be affected by this action if you are an agricultural producer, food manufacturer, or pesticide manufacturer. Potentially affected categories and entities may include, but are not limited to:

Categories	NAICS	Examples of potentially affected entities
Industry	111 112 311 32532	Crop production Animal production Food manufacturing Pesticide manufacturing

This listing is not intended to be exhaustive, but rather provides a guide for readers regarding entities likely to be affected by this action. Other types of entities not listed in the table could also be affected. The North American Industrial Classification System (NAICS) codes have been provided to assist you and others in determining whether or not this action might apply to certain entities. If you have questions regarding the applicability of this action to a particular entity, consult the person listed under **FOR FURTHER INFORMATION CONTACT.**

B. How Can I Get Additional Information, Including Copies of this Document and Other Related Documents?

1. *Electronically.*You may obtain electronic copies of this document, and certain other related documents that might be available electronically, from the EPA Internet Home Page at http://www.epa.gov/. To access this document, on the Home Page select ''Laws and Regulations'' and then look up the entry for this document under the ''**Federal Register**—Environmental Documents.'' You can also go directly to the **Federal Register** listings at http://www.epa.gov/fedrgstr/.

2. *In person.* The Agency has established an official record for this action under docket control number OPP–300986. The official record consists of the documents specifically referenced in this action, and other information related to this action, including any information claimed as Confidential Business Information (CBI). This official record includes the documents that are physically located in the docket, as well as the documents that are referenced in those documents. The public version of the official record does not include any information claimed as CBI. The public version of the official record, which includes printed, paper versions of any electronic comments submitted during an applicable comment period is available for inspection in the Public Information and Records Integrity Branch (PIRIB), Rm. 119, Crystal Mall #2, 1921 Jefferson Davis Hwy., Arlington, VA, from 8:30 a.m. to 4 p.m., Monday through Friday, excluding legal holidays. The PIRIB telephone number is (703) 305–5805.

II. Background and Statutory Findings

In the **Federal Register** of October 8, 1997, (62 FR 52544) (FRL– 5746–9) and July 14, 1999 (64 FR 37973) (FRL–6085–5), EPA issued notices pursuant to section 408 of the Federal Food, Drug, and Cosmetic Act (FFDCA), 21 U.S.C. 346a(d) as amended by the Food Quality Protection Act of 1996 (FQPA) (Public Law 104–170) announcing the filing of a pesticide petition (PP) for tolerance by AgrEvo USA Company, Little Falls Centre One, 2711 Centerville Road, Wilmington, DE 19808. These notices included a summary of the petition prepared by AgrEvo USA Company, the registrant. There were no comments received in response to the notices of filing.

These petitions requested that 40 CFR 180.473 be amended by establishing permanent tolerances for combined residues of the herbicide glufosinate ammonium and its metabolites expressed as 2-amino-4-(hydroxymethylphosphinyl) butanoic acid in or on almond hulls at 0.50 part per million (ppm), apples at 0.05 ppm, bananas at 0.3 ppm (not more than 0.2 ppm shall be present in the pulp after peel is removed), cattle, fat and meat at 0.05 ppm; cattle, meat-by-products at 0.10 ppm; eggs at 0.05 ppm, goats, fat and meat at 0.05 ppm; goats, meat-by-products at 0.10 ppm; grapes at 0.05 ppm; hogs, fat and meat at 0.05 ppm; hogs, meat-by-product at 0.10 ppm; horses, fat and meat at 0.05 ppm; horses, meat-by-products at 0.10 ppm; milk at 0.02 ppm, potatoes at 0.8 ppm, potato chips at 1.6 ppm, potato granules/flakes at 2.0 ppm; poultry, fat and meat at 0.05 ppm; poultry, meat-by-products at 0.10 ppm; sheep, fat and meat at 0.05 ppm; sheep, meat-by-products at 0.10 ppm; transgenic aspirated grain fractions at 25.0 ppm; transgenic corn, field, forage at 4.0 ppm; trangenic corn, field, grain at 0.2 ppm; transgenic corn, field stover at 6.0 ppm; transgenic soybeans hulls at 5.0 ppm; transgenic soybeans at 2.0 ppm and tree nut group at 0.1 ppm.

This list included transgenic beet, sugar, tops (leaves) at 1.5 ppm; transgenic beet, sugar, root at 0.9 ppm; transgenic beet, sugar, molasses at 5.0 ppm; transgenic canola meal at 1.1 ppm and transgenic canola seed at 0.4 ppm. Tolerances were established for the former list of commodities on November 4, 1999 (64 FR 60112–60121). As EPA was not able to validate the analytical method submitted in support of tolerances for the commodities derived from transgenic canola and transgenic sugar beets, tolerances were not established at that time. AgrEvo USA Company revised the analytical method for determining residues in these commodities and the EPA has been able to validate the revised method and found it adequate for determining residues in these commodities. The level of the residues were also found appropriate.

The tolerances for canola and sugar beet commodities are listed under § 180.473(b) as commodities derived from transgenic canola and transgenic sugar beets and with commodities derived from transgenic corn and trangenic soybeans because the registered use-sites are for tolerant (transgenic) canola and tolerant (transgenic) sugar beets; and the metabolite residue 2-acetamido-4-methylphosphinico-butanoic acid is common to these tolerant (transgenic) crop plants cultured with the used of

glufosinate ammonium as a post-emergent herbicide.

Section 408(b)(2)(A)(i) of the FFDCA allows EPA to establish a tolerance (the legal limit for a pesticide chemical residue in or on a food) only if EPA determines that the tolerance is ''safe.'' Section 408(b)(2)(A)(ii) defines ''safe'' to mean that ''there is a reasonable certainty that no harm will result from aggregate exposure to the pesticide chemical residue, including all anticipated dietary exposures and all other exposures for which there is reliable information.'' This includes exposure through drinking water and in residential settings, but does not include occupational exposure. Section 408(b)(2)(C) requires EPA to give special consideration to exposure of infants and children to the pesticide chemical residue in establishing a tolerance and to ''ensure that there is a reasonable certainty that no harm will result to infants and children from aggregate exposure to the pesticide chemical residue.* * *''

EPA performs a number of analyses to determine the risks from aggregate exposure to pesticide residues. For further discussion of the regulatory requirements of section 408 and a complete description of the risk assessment process, see the final rule on Bifenthrin Pesticide Tolerances (62 FR 62961, November 26, 1997) (FRL–5754–7).

III. Aggregate Risk Assessment and Determination of Safety

Consistent with section 408(b)(2)(D), EPA has reviewed the available scientific data and other relevant information in support of this action. EPA has sufficient data to assess the hazards of and to make a determination on aggregate exposure, consistent with section 408(b)(2), for permanent tolerances for combined residues of glufosinate ammonium and its metabolite(s) in or on transgenic canola meal at 1.1 ppm, tansgenic canola seed at 0.4 ppm transgenic beet, sugar, tops (leaves) at 1.5 ppm; transgenic beet, sugar, root at 0.9 ppm; transgenic beet, sugar, molasses at 5.0 ppm. EPA's assessment of the dietary exposures and risks associated with establishing these tolerances follows.

A. Toxicological Profile

EPA has evaluated the available toxicity data and considered its validity, completeness, and reliability as well as the relationship of the results of the studies to human risk. EPA has also considered available information concerning the variability of the sensitivities of major identifiable subgroups of consumers, including infants and children. The nature of the toxic effects caused by glufosinate ammonium are discussed in this unit.

1. Glufosinate ammonium (also referred to as DL-glufosinate ammonium or HOE 039866) is toxicity category III for acute oral, dermal, and eye irritation toxicities. It is toxicity category III for inhalation toxicity. It is not a dermal irritant (toxicity category IV) nor is it a dermal sensitizer.

2. In a sub-chronic oral toxicity study, glufosinate-ammonium (95.3% a.i.) was administered to 10 NMRI mice/sex/dose in the diet at levels of 0, 80, 320 or 1,280 ppm (equivalent to 0, 12, 48 or 192 mg/kg/day) for 13 weeks. Significant ($p<0.05$) increases were observed in serum aspartate aminotransferase and in alkaline phosphatase in high-dose (192 mg/kg/day) males. Also observed were increases in absolute and relative liver weights in mid- (48 mg/kg/day) and high-dose males. The no-observed-adverse effect level (NOAEL) is 12 mg/kg/day, the lowest-observe-adverse effect level (LOAEL) is 48 mg/kg/day based on the changes in clinical biochemistry and liver weights.

3. In a 21- day repeated dose dermal toxicity study, groups of 6 male and 6 female Wistar rats were treated with HOE 039866 (95.3%) in deionized water by dermal occlusion at doses of 0, 100, 300 or 1,000 mg/kg/day, 6 hours/day, 5 days/week for 21 applications in 30 days. An additional five males and five females/dose group were dose and observed for 44 days in a ''recovery study''. Two of 6 LDT males at 300 mg/kg/day, and 4 of 11 males and 2 of 11 females at 1,000 mg/kg/day displayed aggressive behavior, piloerection and a high startle response. There were no effects of toxicological importance on body weights, food consumption, hematology, clinical chemistry, urinalysis, organ weights, or gross or microscopic pathology. Based on clinical observations, the LOAEL is 300 mg/kg/day and the NOAEL is 100 mg/kg/day.

4. In an oncogenicity study, HOE 039866 (glufosinate ammonium) was administered to 50 NMRI mice/sex/dose in the diet at dose levels of 0, 80, 160 (males only) or 320 (females only) ppm for 104 weeks. Dose levels corresponded to 0, 2.83, 10.82, 22.60 mg/kg/day in males and 0, 4.23, 16.19, 66.96 mg/kg/day in females. The NOAEL for systemic toxicity is 80 ppm (10.82/16.19 mg/kg/day in M/F), and the LOAEL is 160/320 ppm (22.60 / 63.96 mg/kg/day in M/F), based on increased mortality in males, increased glucose levels in males and females, and consistent changes in glutathione levels in males. No increase in tumor incidence was found in any treatment group.

5. In a chronic feeding study, HOE 039866 technical was fed to male and female beagle dogs for 12 months in the diet at levels of 2.0, 5.0 or 8.5 mg/kg/day. There were no overt signs of toxicity or dose-related effects on body weight, food consumption, ophthalmology, hematology, clinical chemistry, urinalyses or organ weights. Two dogs receiving 8.5 mg/kg/day died during the study as a result of heart and circulatory system failure from rapid diet consumption and necrotizing aspiration pneumonia. Electrocardiogram results of dosed males and females indicated a dose-related decrease in heart rate at 6 months; heart rates of dosed animals at 12 months were considered to be normal. The NOAEL is 5.0 mg/kg/day, the LOAEL is 8.5 mg/kg/day based on mortality.

6. In a rat oncogenicity study, glufosinate-ammonium (95.2–96.0% a.i.) was administered to Wistar rats (60/sex/group) for up to 24 months at 0, 1,000, 5,000, or 10,000 ppm (equivalent to 0, 45.4, 228.9, or 466.3 mg/kg/day in males and 0, 57.1, 281.5, or 579.3 mg/kg/day in females). The LOAEL for chronic toxicity is 5,000 ppm (equivalent to 228.9 mg/kg/day for male rats and 281.5 mg/kg/day for females), based on increased incidences of retinal atrophy. The chronic NOAEL is 1,000 ppm. Under the conditions of this study, there was no evidence of carcinogenic potential. Dosing was considered adequate based on increased incidences of retinal atrophy.

7. In a combined chronic toxicity/oncogenicity study, glufosinate ammonium was administered to 50 Wistar rats/sex/dose in the diet for 24 months at dose levels of 0, 40, 140, or 500 ppm (mean compound intake in males was 0, 1.9, 6.8, and 24.4 mg/kg/day and for females was 0, 2.4, 8.2 and 28.7 mg/kg/day, respectively). The LOAEL is 2.4 mg/kg/day (LDT) based on the increase in kidney glutamine synthetase activity and increased kidney weights in females. A NOAEL was not established. There was no clear demonstration of increased tumor incidence following exposure to glufosinate ammonium. Dosing was considered adequate based on the increase in kidney glutamine synthetase activity and increased kidney weights in females.

8. In a developmental toxicity study, groups of 20 pregnant female Wistar rats were administered HOE 039866 (glufosinate ammonium, 96.9 a.i.) by gavage at doses of 0, 0.5, 2.24 10, 50 and 250 mg/kg/day from days 7 to 16 of

pregnancy. The no-observed-adverse effect level (NOAEL) for maternal toxicity is 10 mg/kg/day; the LOAEL is 50 mg/kg/day based on vaginal bleeding and hyperactivity in dams. In the fetus, the NOAEL is 50 mg/kg/day, based on dilated renal pelvis at the LOAEL of 250 mg/kg/day.

9. In a developmental toxicity study, groups of 15 pregnant female Himalayan rabbits were administered HOE 039866 by gavage at doses of 0, 2.0, 6.3 or 20.0 mg/kg/day from days 7 to 19 of pregnancy. The NOAEL for both maternal toxicity and developmental toxicity was 2.0 mg/kg/day. The LOAEL is 6.3 mg/kg/day based on reduced food consumption, body weight and weight gains and increased kidney weights in dams, and incomplete ossification in fetuses with fetal death at 20 mg/kg/day.

10. In a multigeneration reproduction study, glufosinate ammonium was administered to groups of 30 male and 30 female Wistar/Han rats in the diet at concentrations of 0, 40, 120 or 360 ppm (approximately 2.0, 6.0, 18.0 mg/kg). The LOAEL for systemic toxicity is 120 ppm (6 mg/kg/day) based on increased kidney weights in both sexes and generations. The systemic toxicity NOAEL is 40 ppm (2 mg/kg/day). The LOAEL for reproductive/developmental toxicity is 360 ppm (18 mg/kg/day) based on decreased number of viable pups in all generations. The NOAEL is 120 ppm.

11. There is no concern for mutagenic activity in several studies, including: *Salmonella spp., E. coli, in vitro* mammalian cell gene mutation assays, mammalian cell chromosome aberration assays, *in vivo* mouse bone marrow micronucleus assays, and unscheduled DNA synthesis assays.

12. A rat metabolism study with dermal application showed that about 50% of the given radioactivity is absorbed 48 hours after a single dose application. In other metabolism studies, it was shown that over 80% of administered radioactivity is excreted within 24 to 48 hours as the parent compound in the feces and kidneys. Highest tissue levels were found in liver, kidney and gonads.

A consistent pattern of neurotoxicity was seen in several studies, including the subchronic, developmental and chronic studies in rats, mice and dogs. In addition to the clinical signs such as hyperactivity, aggressive behavior, piloerection, high startle response, retinal atrophy was observed. Changes in glutamine synthetase levels were observed in liver, kidney and brain in rats. These occurrences raise concern for the mechanism of neurotoxicity in these studies, an area where there are data gaps. It is expected that the requested neurotoxicity studies will provide the information needed for further characterization of these effects.

Additional testing was conducted with the major metabolites, HOE 061517 and HOE 099730, as well as the L-isomer, identified as HOE 058192. These compounds, tested in subchronic rat, mouse and dog studies, and in developmental toxicity studies in rat and rabbit showed a similar profile of toxicity as the parent compound (HOE 039866).

B. Toxicological Endpoints

1. *Acute toxicity.* An acute RfD was not established for the general population. No appropriate toxicological endpoint attributable to a single exposure was identified in the available toxicity studies. However, an acute RfD of 0.063 mg/kg/day was established for the females 13+ subgroup, based on a developmental NOAEL of 6.3 mg/kg/day in the rabbit and a 100x uncertainty factor (10x inter- 10x intra-species extrapolation). The developmental LOAEL (20 mg/kg/day) was based on reduced fetal body weight and increased fetal death. The FQPA safety factor of 10x was reduced to 3x because there was no qualitative or quantitative indication of increased susceptibility in the prenatal developmental toxicities in rats and rabbits or in the two generation reproductive study in rats with parent compound, the isomer or metabolites of concern. Toxicological studies showed neurological effects in short term studies described as aggressive behavior, piloerection and a high startle response at dosages of 300 mg/kg/day. Based on these effects, EPA determined that a 3x FQPA safety factor was appropriate for the risk assessment for the food and feed used of glufosinate ammonium. Using the 3x FQPA safety factor, the acute population adjusted dose (aPAD) for glufosinate ammonium is 0.021 mg/kg/day.

2. *Short- intermediate- and long-term toxicity*—i. *Dermal.* Short- and intermediate-term dermal toxicity risk assessments were recommended based on neurological clinical signs (hyperactivity, aggressive behavior, piloerection) observed in the 21- day dermal study at 300 mg/kg/day (LOAEL). The NOAEL was 100 mg/kg/day. A long-term dermal risk assessment was recommended based on the NOAEL of 2.1 mg/kg/day established in the 2-year chronic study in rats (see chronic dietary; 50% dermal absorption).

ii. *Inhalation.* With the exception of an acute inhalation study, no other inhalation studies were available. Therefore, oral NOAELs were selected for inhalation risk assessments. Because an oral dose was used, the exposure assessments was conducted by converting the application rate to oral equivalents and assuming 100% absorption.

Short-term inhalation risk assessments were recommended based on the developmental NOAEL of 6.3 mg/kg/day in the rabbit (see acute dietary endpoint). Intermediate-term inhalation risk assessments were recommended based on the NOAEL of 2.1 mg/kg/day from the 2- year chronic rat study (see chronic dietary endpoint below).

3. *Chronic toxicity.* EPA has established the RfD for glufosinate ammonium at 0.021 mg/kg/day based on the NOAEL of 2.1 mg/kg/day in the 2-year chronic study in rats and a 100x uncertainty factor (10x inter- 10x intra-species extrapolation). The LOAEL in the study was based on increased kidney weight and kidney/brain weight in males at 52 weeks (6.8 mg/kg/day) and decreased survival in females at 130 weeks (8.2 mg/kg/day). Using the 3x FQPA safety factor, the chronic population adjusted dose (cPAD) for glufosinate ammonium is 0.007 mg/kg/day.

4. *Carcinogenicity.* Based on a lack of mutagenic potential as assessed in a battery of mutagenicity assays and the absence of treatment-related tumors in rats and mice at dose levels adequate for assessment, the EPA has determined that glufosinate ammonium is not likely a carcinogen; and has classified it as a ''Group E—Evidence of Non-Carcinogenicity for Humans'' chemical.

C. Exposures and Risks

1. *From food and feed uses.* Tolerances have been established (40 CFR 180.473 for the combined residues of glufosinate ammonium and its metabolites, in or on a variety of raw agricultural commodities. All tolerances listed under Unit III of this preamble, except those for canola meal at 1.1 ppm, canola seed at 0.4 ppm, sugar beet, molasses at 5.0 ppm; sugar beet, roots at 0.9 ppm and sugar beet tops (leaves) at 1.5 ppm, were established as permanent tolerances on November 4, 1999 (64 FR 60112–61121). This rule addresses the pending petition for establishing permanent tolerances in these commodities. Risk assessments were conducted by EPA to assess dietary exposures from tolerance levels of residue as follows:

Section 408(b)(2)(F) states that the Agency may use data on the actual percent of crop treated (PCT) for assessing chronic dietary risk only if the

Agency can make the following findings: Condition 1, that the data used are reliable and provide a valid basis to show what percentage of the food derived from such crop is likely to contain such pesticide residue, Condition 2, that the exposure estimate does not underestimate exposure for any significant sub-population group and Condition 3. that if data are available on pesticide use and food consumption in a particular area, the exposure estimate does not understate exposure for the population in such area. In addition, the Agency must provide for periodic evaluation of any estimates used. To provide for the periodic evaluation of the estimate of PCT as required by section 408(b)(2)(F), EPA may require registrants to submit data on PCT. The Agency used PCT information as follows:

The chronic dietary exposure analysis assumed tolerance level residues for all registered and proposed commodities. The weighted average percent crop treated was incorporated for all registered commodities. Sweet corn and proposed commodities were maintained at 100% crop treated.

The Agency believes that the three conditions listed above have been met. With respect to (Condition 1), percent of crop treated estimates are derived from Federal and private market survey data, which are reliable and have a valid basis. EPA uses a weighted average percent crop treated for chronic dietary exposure estimates. This weighted average percent crop treated figure is derived by averaging state-level data for a period of up to 10 years, and weighting for the more robust and recent data. A weighted average of the percent crop treated reasonably represents a person's dietary exposure over a lifetime, and is unlikely to underestimate exposure to an individual because of the fact that pesticide use patterns (both regionally and nationally) tend to change continuously over time, such that an individual is unlikely to be exposed to more than the average percent crop treated over a lifetime. For acute dietary exposure estimates, EPA uses an estimated maximum percent crop treated. The exposure estimates resulting from this approach reasonably represent the highest levels to which an individual could be exposed, and are unlikely to underestimate an individual's acute dietary exposure. The Agency is reasonably certain that the percentage of the food treated is not likely to be an underestimation. As to Condition 2 and Condition 3, regional consumption information and consumption information for significant subpopulations is taken into account through EPA's computer-based model for evaluating the exposure of significant subpopulations including several regional groups. Use of this consumption information in EPA's risk assessment process ensures that EPA's exposure estimate does not understate exposure for any significant subpopulation group and allows the Agency to be reasonably certain that no regional population is exposed to residue levels higher than those estimated by the Agency. Other than the data available through national food consumption surveys, EPA does not have available information on the regional consumption of food to which pesticide glufosinate ammonium may be applied in a particular area.

i. *Acute exposure and risk.* The acute dietary exposure analysis for females 13+ (no acute dietary endpoint was identified for the general U.S. population including infants and children) assumed tolerance level residues and 100% crop treated for all registered and proposed commodities (Tier 1 analysis). The most highly exposed population was females 13+/nursing at 58% of the aPAD (95th percentile). Acute dietary food exposure to glufosinate ammonium is below EPA's level of concern.

ii. *Chronic exposure and risk.* The chronic dietary exposure analysis assumed tolerance level residues for all registered and proposed commodities. The weighted average percent crop treated was incorporated for all registered commodities. Sweet corn and proposed commodities were maintained at 100% crop treated. The most highly exposed population was children 1–6 years old at 71% of the cPAD (0.004974 mg/kg/day). Chronic dietary food exposure to glufosinate ammonium is below EPA's level of concern.

2. *From drinking water.* Aggregate exposures are generally calculated by summing dietary (food and water) and residential exposures. If the aggregate exposure is less than the specified PAD, the exposure is not expected to be a concern. Because EPA does not have ground and surface water monitoring data to calculate a quantitative aggregate exposure, a DWLOC was calculated. The DWLOC is the upper limit of a chemical's concentration in drinking water that will result in an acceptable aggregate exposure. The DWLOC is used as a point of comparison against model estimates of a pesticide's concentration in water. DWLOC values are not regulatory standards for drinking water. They do have indirect regulatory impact through aggregate exposure and risk assessments.

To calculate the acceptable acute and chronic exposure to glufosinate ammonium in drinking water, the dietary food exposure estimate was subtracted from the appropriate PAD (only short-term residential exposure). A DWLOC was then calculated by using default body weights and drinking water consumption figures (70 kg/2L (adult male), 60 kg/2L (adult female) and 10 kg/1L (infant/child)).

The estimated maximum and average concentration of glufosinate ammonium in ground and surface water are less than EPA's DWLOC for glufosinate ammonium as a contribution to acute and chronic aggregate exposure (for all population subgroups).

i. *Acute exposure and risk.* The Agency's analysis based on the information available is presented in the following table 1:

TABLE 1.—ACUTE DWLOCS

Population Subgroup [1]	aPAD mg/kg/day	Food Exposure mg/kg/day	Maximum Water Exposure [2] mg/kg/day	DWLOC[3] ppb	SCI-GROW ppb	PRZM-EXAMS ppb
Females (13+, nursing)	0.021	0.012131	0.008869	270	1.16	34.1

[1] Highest exposed subgroup among females 13+
[2] Maximum water exposure (mg/kg/day) = 0.021 mg/kg/day - acute food exposure (mg/kg/day)
[3] DWLOC = [(maximum water exposure mg/kg/day)(body weight kg)/(water consumption liters)] * 1,000

ii. *Chronic exposure and risk.* The Agency's analysis based on the information available is presented in the following table 2:

TABLE 2.—CHRONIC (NON-CANCER) DWLOC

Population Subgroup [1]	cPAD mg/kg/day	Food Exposure mg/kg/day	Maximum Water Exposure [2] mg/kg/day	DWLOC [3] ppb	SCI-GROW ppb	PRZM-EXAMS ppb
U.S. Population	0.007	0.002120	0.004880	170	1.16	0.79
Non-Hispanic blacks	0.007	0.002246	0.004754	170	1.16	0.79
Non-Hispanic/non-white/non-black	0.007	0.002256	0.004744	170	1.16	0.79
Non-Hispanic whites	0.007	0.002132	0.004868	170	1.16	0.79
Children 1–6 yrs	0.007	0.004974	0.002026	20	1.16	0.79
Females 13+ nursing	0.007	0.002035	0.004965	150	1.16	0.79
Males 13–19 yrs	0.007	0.002449	0.004551	160	1.16	
0.79.						

[1] The subgroups listed above are the following: (1) US Population, (2) the other general subgroups for which the %cPAD is greater than that of the US Population and (3) the most highly exposed population among infants and children, females, and males.
[2] maximum water exposure (mg/kg/day) = (0.007 mg/kg/day - acute food exposure, (mg/kg/day)); no residential exposure
[3] DWLOC = [(maximum water exposure mg/kg/day)(body weight kg)/(water consumption liters)]* 1,000

3. *From non-dietary exposure.* Glufosinate ammonium is currently registered for use on the following non-food sites: areas around ornamentals, shade trees, Christmas trees, shrubs, walks, driveways, flower beds, farmstead buildings, in shelter belts, and along fences. It is also registered for use as a post-emergent herbicide on farmsteads, areas associated with airports, commercial plants, storage and lumber yards, highways, educational facilities, fence lines, ditch banks, dry ditches, schools, parking lots, tank farms, pumping stations, parks, utility rights-of -way, roadsides, railroads, and other public areas and similar industrial and non-food crop areas. It is also registered for lawn renovation uses.

In a pharmacokinetics study with dermal application in rats radioactive glufosinate ammonium was used at levels of 0.1, 1.0, or 10.0 mg/rat on 6 cm square of shaved skin and exposed for 0.5, 1, 2, 4, 10, 24, or 168 hrs. At the low dose (0.1 mg), 42.5 to 50.8% of the applied radioactivity was absorbed whereas at the high dose (10.0 mg) 26% was absorbed. After removal and washing of the treated skin a substantial amount of the radioactivity still remained in the skin. and it was gradually absorbed and eliminated. Radioactivity was found in both feces and urine samples, but the majority of glufosinate ammonium was eliminated in the urine. In all organs/tissues examined, radioactivity was found to reach a maximum level either at 4 or 10 hours after exposure. Subsequently, the radioactivity dropped rapidly. The amount of radioactivity found in the brain was minimal relative to that of kidneys and liver. Based on this study, a 50% dermal absorption factor was determined based on the range of 42.5% to 50.8% of radioactivity absorbed at 0.10 mg/kg.

i. *Acute exposure and risk.* There are no acute non-dietary exposure scenarios.

ii. *Chronic exposure and risk.* There are no chronic non-dietary exposure scenarios.

iii. *Short- and intermediate-term exposure and risk.* It is not appropriate to aggregate short- and intermediate-term non-dietary exposure with dietary exposures in this risk assessment because the end-points are different.

iv. *Cumulative exposure to substances with common mechanism of toxicity.* Section 408(b)(2)(D)(v) requires that, when considering whether to establish, modify, or revoke a tolerance, the Agency consider ''available information'' concerning the cumulative effects of a particular pesticide's residues and ''other substances that have a common mechanism of toxicity.''

EPA does not have, at this time, available data to determine whether glufosinate ammonium has a common mechanism of toxicity with other substances or how to include this pesticide in a cumulative risk assessment. Unlike other pesticides for which EPA has followed a cumulative risk approach based on a common mechanism of toxicity, glufosinate ammonium does not appear to produce a toxic metabolite produced by other substances. For the purposes of this tolerance action, therefore, EPA has not assumed that glufosinate ammonium has a common mechanism of toxicity with other substances. For information regarding EPA's efforts to determine which chemicals have a common mechanism of toxicity and to evaluate the cumulative effects of such chemicals, see the final rule for Bifenthrin Pesticide Tolerances (62 FR 62961, November 26, 1997).

D. Aggregate Risks and Determination of Safety for U.S. Population

1. *Acute risk.* The acute dietary exposure analysis assumed tolerance level residues and 100% crop treated for all commodities derived from glufosinate ammonium treated crops. For the most highly exposed subgroup among females 13+ (nursing females), 58% of the aPAD is occupied by dietary (food) exposure, an acute RfD was not established for the general population including infants and children. The estimated glufosinate ammonium concentration in surface and ground water are less than EPA's DWLOC (for all population subgroups). Acute aggregate exposure to glufosinate ammonium and related metabolites, as a result of all registered and proposed uses, is below EPA's level of concern.

2. *Chronic risk.* There are no chronic non-dietary exposure scenarios. Therefore, only food and water are included in the chronic aggregate risk. The chronic dietary exposure analysis assumed tolerance level residues for all commodities derived from the crop use of glufosinate ammonium and incorporated the weighted average percent crop treated for all commodities derived from glufosinate ammonium treated crops, except for sweet corn, registered under section 18 of the Federal Insecticide, Fungicide and Rodenticide Act (FIFRA), as amended. For the most highly exposed subgroup (children, 1–6 years), 71% of the cPAD is occupied by dietary (food) exposure. The estimated glufosinate ammonium concentrations in surface and ground water are less than EPA's DWLOC for all population subgroups. Chronic

aggregate exposure to glufosinate ammonium as a result of all registered and proposed uses is below EPA's level of concern. EPA generally has no concern for exposures below 100% of the cPAD because the cPAD represents the level at or below which daily aggregate dietary exposure over a life time will not pose appreciable risks to human health. Despite the potential for chronic exposure to glufosinate ammonium in drinking water, after calculating a DWLOC (236 ppb) for the U.S. population and comparing it to conservative model estimates of concentrations of glufosinate ammonium in surface and ground water (59.43 ppb and 1.16 ppb, respectively), EPA does not expect the aggregate exposure to exceed 100% of the cPAD.

3. *Short- and intermediate-term risk.* Short- and intermediate-term aggregate exposure takes into account chronic dietary food and water (considered to be a background exposure level) plus indoor and outdoor residential exposure. There are registered residential uses for glufosinate ammonium. The potential dermal exposures were not aggregated because the toxic effects for short- and intermediate-term exposure (neurological clinical signs) and chronic exposure (increases in absolute and relative kidney weights) are different.

4. *Aggregate cancer risk for U.S. population.* There is no cancer concern based on negative results observed in three guideline studies available for the carcinogenicity screen: a chronic feeding study in rats, a carcinogenicity study in rats and a carcinogenicity study in mice, each described under the ''Toxicology Profile'', Unit III.A. of this preamble. Glufosinate ammonium has been classified as a ''not likely'' carcinogen according to the EPA Proposed Guidelines for Carcinogn Risk Assessment. Therefore, a cancer risk assessment was not necessary.

5. *Determination of safety.* Based on these risk assessments, EPA concludes that there is a reasonable certainty that no harm will result from aggregate exposure to glufosinate ammonium residues.

E. Aggregate Risks and Determination of Safety for Infants and Children

1. *Safety factor for infants and children*—i. *In general.* In assessing the potential for additional sensitivity of infants and children to residues of glufosinate ammonium, EPA considered data from developmental toxicity studies in the rat and rabbit and a 2-generation reproduction study in the rat. The developmental toxicity studies are designed to evaluate adverse effects on the developing organism resulting from maternal pesticide exposure during gestation. Reproduction studies provide information relating to effects from exposure to the pesticide on the reproductive capability of mating animals, and data on systemic toxicity.

FFDCA section 408 provides that EPA shall apply an additional tenfold margin of safety for infants and children in the case of threshold effects to account for pre- and post-natal toxicity and the completeness of the data base unless EPA determines that a different margin of safety will be safe for infants and children. Margins of safety are incorporated into EPA risk assessments either directly through use of a margin of exposure (MOE) analysis or through using uncertainty (safety) factors in calculating a dose level that poses no appreciable risk to humans. EPA believes that reliable data support using the standard uncertainty factor (usually 100 for combined inter- and intra-species variability) and not the additional tenfold MOE/uncertainty factor when EPA has a complete data base under existing guidelines and when the severity of the effect in infants or children or the potency or unusual toxic properties of a compound do not raise concerns regarding the adequacy of the standard MOE/safety factor.

ii. *Developmental toxicity studies.* Two studies were described in the Toxicology Profile, Unit III.A.8. and 9. of this preamble.

iii. *Reproductive toxicity study.* A reproductive toxicity study was described in the Toxicology Profile, Unit III.A.10. of this preamble.

iv. *Pre- and post-natal sensitivity.* The toxicological data base for evaluating prenatal and postnatal toxicity for glufosinate ammonium is complete with respect to current data requirements. There are no prenatal or postnatal susceptibility concerns for infants and children, based on the results of the rat and rabbit developmental toxicity studies and the 2-generation reproduction study.

v. *Other studies.* Based on clinical signs of neurological toxicity in short- and intermediate-dermal toxicity studies with rats, EPA has determined that an added FQPA safety factor of 3x is appropriate for the risk assessment for the tolerances in the commodities listed in this Final Rule. The FQPA safety factor of 10x was reduced to 3x because there were no qualitative or quantitative indications of increased susceptibility in the prenatal developmental toxicities in rats and rabbits, or in the two-generation reproductive studies in rats with the parent compound, the isomer or metabolites of concern.

vi. *Conclusion.* There is a complete toxicity database for glufosinate ammonium, and exposure data is complete or is estimated based on data that reasonably accounts for potential exposures.

2. *Acute risk.* The acute dietary exposure analysis assumed tolerance level residues and 100% crop treated for all registered and proposed commodities. For the most highly exposed subgroup among females 13–50 (nursing females), 58% of the aPAD is occupied by dietary (food) exposure (no acute RfD was established for the general population including infants and children). The estimated glufosinate ammonium concentration in surface and ground water are less than EPA's DWLOC (for all population subgroups). Acute aggregate exposure to glufosinate ammonium and related metabolites, as a result of all registered and proposed uses, is below EPA's level of concern.

3. *Chronic risk.* Based on exposure assumptions described above, EPA has concluded that aggregate exposure to glufosinate ammonium from food will utilize 71% of the cPAD for children 1–6 years of age, the most highly exposed subgroup. EPA generally has no concern for exposures blow 100% of the cPAD because the cPAD represents the level at or below which daily aggregate dietary exposure over a lifetime will not pose appreciable risks to human health. Despite the potential for chronic exposure to glufosinate ammonium in drinking water, after calculating a DWLOC (64 ppb) for non-nursing infants and comparing it to conservative model estimates of concentrations of glufosinate ammonium in surface and ground water (59.43 ppb and 11.16 ppb, respectively), EPA does not expect the aggregate exposure to exceed 100% of the cPAD.

4. *Short- or intermediate-term risk.* Short- and intermediate-term aggregate exposure takes into account chronic dietary food and water (considered to be a background exposure level) plus indoor and outdoor residential uses. There are registered residential uses for glufosinate ammonium, however, the potential dermal exposures were not aggregated because the toxic effects for short- and intermediate-term exposure (neurological clinical signs) and chronic exposure (increases in absolute and relative kidney weights) are different.

5. *Determination of safety.* Based on these risk assessments, EPA concludes that there is a reasonable certainty that no harm will result to infants and children from aggregate exposure to residues of glufosinate ammonium residues.

F. Metabolism in Plants and Animals

1. *Plants.* The nature of the residues of glufosinate ammonium is considered to be understood. The Agency has concluded that the residues of concern are glufosinate ammonium and its metabolites 2-acetamido-4-methylphosphinico-butanoic acid and 3-methylphosphinico-propionic acid expressed as glufosinate ammonium free acid equivalents.

2. *Animals.* A rat metabolism study with dermal application indicated that about 50% of the given radioactivity was absorbed 48 hours after a single dose application. In other metabolism studies, it was shown that over 80% of administered radioactivity is excreted within 24 to 48 hours as the parent compound in the feces and kidneys. Highest tissue levels were found in liver, kidney and gonads. The nature of glufosinate ammonium residues in lactating goats and hens is considered to be understood. Glufosinate ammonium and its metabolite (3-methylphosphinico propionic acid) are largely excreted and do not accumulate too any great degree in animal tissues. The only identifiable compounds in feces, urine, milk, eggs and tissues were the parent and 3-methylphosphinico propionic acid. EPA has concluded that the residues of concern in commodities derived from ruminants and poultry are glufosinate ammonium and its metabolite 3-methylphospinico propionic acid, expressed as glufosinate ammonium free acid equivalents.

G. Analytical Enforcement Methodology

In Pesticide Analytical Manual II (PAM II), method HRAV–5A describes an adequate analytical method for determining residues of glufosinate ammonium and its metabolite 3-methylphosphinico propionic acid in or on apples, bananas, grape, potatoes and tree nuts. In PAM II, method HRAV–12, is an adequate method for determining residues of glufosinate ammonium and its metabolite 3-methylphosphinico-propionic acid in or on milk, eggs and tissues of ruminants and poultry. Method BK/01/99 is an adequate method for determining residues of glufosinate ammonium and its metabolites in or on commodities derived from transgenic canola, transgenic field corn, transgenic soybeans and transgenic sugar beets. This method detects and measures total residues of parent and metabolites and allows detection and measurement of parent compound residues separately from residues of the metabolites. Final determination is made by gas chromatography with flame photometric detection (GC/FPD) operating in the phosphorus selective mode (p-mode). Residues are expressed as glufosinate ammonium free acid equivalents.

Adequate enforcement methodology (gas chromatography with mass spectrophotometry) is available to enforce the tolerances for commodities derived from transgenic canola and transgenic sugar beets. These methods may be requested from: Calvin Furlow, PRRIB, IRSD (7502C), Office of Pesticide Programs, Environmental Protection Agency, 401 M St., SW., Washington, DC 20460; telephone number: (703) 305–5229; e-mail address: furlow.calvin@epa.gov.

H. Magnitude of Residues

The residues established by this regulation are qualified and quantified in Unit IV. of this preamble.

I. International Residue Limits

The Codex Alimentarius Commission has established maximum residue limits (CODEX MRLs) for the combined residues of glufosinate ammonium and metabolites 3-methylphosphinico-propionic acid and, when used in culture of genetically modified glufosinate ammonium tolerant crops, *N*-acetyl glufosinate (2-acetamido-4-methylphosphinico-butanoic acid) expressed as glufosinate free acid equivalents. A CODEX MRL is established in or on rape seed (canola seed) at 5 ppm. Canada has established a maximum residue limit (MRL) for the combined residues of glufosinate ammonium and 3-methylphosphinico-propionic acid in/on canola seed at 3.0 ppm. Because the CODEX and Canadian MRLs for canola seed are significantly greater than the appropriate U.S. tolerance for canola seed established by this Final Rule, and because there are no MRLs for canola meal harmonization is not possible. CODEX MRLs are established in or on sugar beets at 0.05 ppm and sugar beet leaves or tops at 0.1 ppm. There is no CODEX MRL for sugar beet molasses and there are no Canadian MRLs for sugar beet commodities. Because the appropriate tolerances for sugar beet roots and tops (leaves) established by this Final Rule are greater than the CODEX MRLs and there is no CODEX MRL for molasses, harmonization is also not possible. As this Rule establishes tolerances for transgenic canola and transgenic sugar beet commodities and includes the metabolite 2-acetamido-4-methylphosphinico-butanoic acid expressed as 2-amino-4-(hydroxymethylphosphinyl) butanoic acid equivalents, harmonization is also not possible. These differences in residues are due to differences in the use-patterns represented in the data bases used in establishing these different levels of residues found in the raw agricultural commodities derived from transgenic canola and transgenic sugar beets, cultured with the use of glufosinate ammonium as a herbicide for weed control.

IV. Conclusion

Therefore, permanent tolerances are established for combined residues of glufosinate ammonium and its metabolites in or on transgenic canola meal at 1.1 ppm, transgenic canola seed at 0.4 ppm, transgenic sugar beet tops (leaves) at 1.5 ppm, transgenic sugar beet root at 0.9 ppm and transgenic sugar beet molasses at 5.0 ppm.

V. Objections and Hearing Requests

Under section 408(g) of the FFDCA, as amended by the FQPA, any person may file an objection to any aspect of this regulation and may also request a hearing on those objections. The EPA procedural regulations which govern the submission of objections and requests for hearings appear in 40 CFR part 178. Although the procedures in those regulations require some modification to reflect the amendments made to the FFDCA by the FQPA of 1996, EPA will continue to use those procedures, with appropriate adjustments, until the necessary modifications can be made. The new section 408(g) provides essentially the same process for persons to ''object'' to a regulation for an exemption from the requirement of a tolerance issued by EPA under new section 408(d), as was provided in the old FFDCA sections 408 and 409. However, the period for filing objections is now 60 days, rather than 30 days.

A. What Do I Need to Do to File an Objection or Request a Hearing?

You must file your objection or request a hearing on this regulation in accordance with the instructions provided in this unit and in 40 CFR part 178. To ensure proper receipt by EPA, you must identify docket control number OPP–300986 in the subject line on the first page of your submission. All requests must be in writing, and must be mailed or delivered to the Hearing Clerk on or before May 30, 2000.

1. *Filing the request.* Your objection must specify the specific provisions in the regulation that you object to, and the grounds for the objections (40 CFR 178.25). If a hearing is requested, the objections must include a statement of the factual issues(s) on which a hearing is requested, the requestor's contentions on such issues, and a summary of any

evidence relied upon by the objector (40 CFR 178.27). Information submitted in connection with an objection or hearing request may be claimed confidential by marking any part or all of that information as CBI. Information so marked will not be disclosed except in accordance with procedures set forth in 40 CFR part 2. A copy of the information that does not contain CBI must be submitted for inclusion in the public record. Information not marked confidential may be disclosed publicly by EPA without prior notice.

Mail your written request to: Office of the Hearing Clerk (1900), Environmental Protection Agency, Ariel Rios Bldg., 1200 Pennsylvania Ave., NW., Washington, DC 20460. You may also deliver your request to the Office of the Hearing Clerk in Rm. C400, Waterside Mall, 401 M St., SW., Washington, DC 20460. The Office of the Hearing Clerk is open from 8 a.m. to 4 p.m., Monday through Friday, excluding legal holidays. The telephone number for the Office of the Hearing Clerk is (202) 260–4865.

2. *Tolerance fee payment*. If you file an objection or request a hearing, you must also pay the fee prescribed by 40 CFR 180.33(i) or request a waiver of that fee pursuant to 40 CFR 180.33(m). You must mail the fee to: EPA Headquarters Accounting Operations Branch, Office of Pesticide Programs, P.O. Box 360277M, Pittsburgh, PA 15251. Please identify the fee submission by labeling it ''Tolerance Petition Fees.''

EPA is authorized to waive any fee requirement ''when in the judgement of the Administrator such a waiver or refund is equitable and not contrary to the purpose of this subsection.'' For additional information regarding the waiver of these fees, you may contact James Tompkins by phone at (703) 305–5697, by e-mail at tompkins.jim@epa.gov, or by mailing a request for information to Mr. Tompkins at Registration Division (7505C), Office of Pesticide Programs, Environmental Protection Agency, Ariel Rios Bldg., 1200 Pennsylvania Ave., NW., Washington, DC 20460.

If you would like to request a waiver of the tolerance objection fees, you must mail your request for such a waiver to: James Hollins, Information Resources and Services Division (7502C), Office of Pesticide Programs, Environmental Protection Agency, Ariel Rios Bldg., 1200 Pennsylvania Ave., NW., Washington, DC 20460.

3. *Copies for the Docket*. In addition to filing an objection or hearing request with the Hearing Clerk as described in Unit V.A., you should also send a copy of your request to the PIRIB for its inclusion in the official record that is described in Unit I.B.2. Mail your copies, identified by docket control number OPP–300986, to: Public Information and Records Integrity Branch, Information Resources and Services Division (7502C), Office of Pesticide Programs, Environmental Protection Agency, Ariel Rios Bldg., 1200 Pennsylvania Ave., NW., Washington, DC 20460. In person or by courier, bring a copy to the location of the PIRIB described in Unit I.B.2. You may also send an electronic copy of your request via e-mail to: opp-docket@epa.gov. Please use an ASCII file format and avoid the use of special characters and any form of encryption. Copies of electronic objections and hearing requests will also be accepted on disks in WordPerfect 6.1/8.0 file format or ASCII file format. Do not include any CBI in your electronic copy. You may also submit an electronic copy of your request at many Federal Depository Libraries.

B. When Will the Agency Grant a Request for a Hearing?

A request for a hearing will be granted if the Administrator determines that the material submitted shows the following: There is a genuine and substantial issue of fact; there is a reasonable possibility that available evidence identified by the requestor would, if established resolve one or more of such issues in favor of the requestor, taking into account uncontested claims or facts to the contrary; and resolution of the factual issues(s) in the manner sought by the requestor would be adequate to justify the action requested (40 CFR 178.32).

VI. Regulatory Assessment Requirements

This final rule establishes a tolerance under FFDCA section 408(d) in response to a petition submitted to the Agency. The Office of Management and Budget (OMB) has exempted these types of actions from review under Executive Order 12866, entitled *Regulatory Planning and Review* (58 FR 51735, October 4, 1993). This final rule does not contain any information collections subject to OMB approval under the Paperwork Reduction Act (PRA), 44 U.S.C. 3501 *et seq.,* or impose any enforceable duty or contain any unfunded mandate as described under Title II of the Unfunded Mandates Reform Act of 1995 (UMRA) (Public Law 104–4). Nor does it require any prior consultation as specified by Executive Order 13084, entitled Consultation and Coordination with Indian Tribal Governments (63 FR 27655, May 19, 1998); special considerations as required by Executive Order 12898, entitled Federal Actions to Address Environmental Justice in Minority Populations and Low-Income Populations (59 FR 7629, February 16, 1994); or require OMB review or any Agency action under Executive Order 13045, entitled Protection of Children from Environmental Health Risks and Safety Risks (62 FR 19885, April 23, 1997). This action does not involve any technical standards that would require Agency consideration of voluntary consensus standards pursuant to section 12(d) of the National Technology Transfer and Advancement Act of 1995 (NTTAA), Public Law 104–113, section 12(d) (15 U.S.C. 272 note). Since tolerances and exemptions that are established on the basis of a petition under FFDCA section 408(d), such as the tolerance in this final rule, do not require the issuance of a proposed rule, the requirements of the Regulatory Flexibility Act (RFA) (5 U.S.C. 601 et seq.) do not apply. In addition, the Agency has determined that this action will not have a substantial direct effect on States, on the relationship between the national government and the States, or on the distribution of power and responsibilities among the various levels of government, as specified in Executive Order 13132, entitled Federalism (64 FR 43255, August 10, 1999). Executive Order 13132 requires EPA to develop an accountable process to ensure ''meaningful and timely input by State and local officials in the development of regulatory policies that have federalism implications.'' ''Policies that have federalism implications'' is defined in the Executive Order to include regulations that have ''substantial direct effects on the States, on the relationship between the national government and the States, or on the distribution of power and responsibilities among the various levels of government.'' This final rule directly regulates growers, food processors, food handlers and food retailers, not States. This action does not alter the relationships or distribution of power and responsibilities established by Congress in the preemption provisions of FFDCA section 408(n)(4).

VII. Submission to Congress and the Comptroller General

The Congressional Review Act, 5 U.S.C. 801 et seq., as added by the Small Business Regulatory Enforcement Fairness Act of 1996, generally provides that before a rule may take effect, the agency promulgating the rule must submit a rule report, which includes a copy of the rule, to each House of the Congress and to the Comptroller General

of the United States. EPA will submit a report containing this rule and other required information to the U.S. Senate, the U.S. House of Representatives, and the Comptroller General of the United States prior to publication of this final rule in the **Federal Register**. This final rule is not a ''major rule'' as defined by 5 U.S.C. 804(2).

List of Subjects in 40 CFR Part 180

Environmental protection, Administrative practice and procedure, Agricultural commodities, Pesticides and pests, Reporting and recordkeeping requirements.

Dated: March 17, 2000

James Jones,

Director, Registration Division, Office of Pesticide Programs.

Therefore, 40 CFR chapter I is amended as follows:

PART 180—[AMENDED]

1. The authority citation for part 180 continues to read as follows:

Authority: 21 U.S.C. 321(q), (346a), and 371.

2. In § 180.473 by revising paragraph (a)(2) and by removing and reserving paragraph (b) to read as follows:

§ 180.473 Glufosinate ammonium; tolerances for residues.

(a) * * *

(2) Tolerances are established for the combined residues of glufosinate ammonium (butanoic acid, 2-ammino-4-(hydroxymethylphosphinyl)-monoammonium salt) and its metabolites, 2-acetamido-4-methylphosphinico-butanoic acid and 3-methylphosphinico-propionic acid, expressed as 2-amino-4-(hydroxymethylphosphinyl) butanoic acid equivalents, in or on the following food commodities derived from transgenic canola, transgenic field corn, transgenic soybeans and transgenic sugar beets that are tolerant to the herbicide glufosinate ammonium as follows:

Commodity	Parts per million
Aspirated grain fractions	25.0
Canola meal	1.1
Canola seed	0.4
Corn, field, forage	4.0
Corn, field, grain	0.2
Corn, field, stover	6.0
Soybean hulls	5.0
Soybeans	2.0
Sugar beet, molasses	5.0
Sugar beet, roots	0.9
Sugar beet, tops (leaves)	1.5

(b) *Section 18 emergency exemptions.* [Reserved]

* * * * *

[FR Doc. 00–8000 Filed 3–30–00; 8:45 am]

BILLING CODE 6560–50–F

FEDERAL COMMUNICATIONS COMMISSION

47 CFR Part 73

[DA 00–585; MM Docket No. 99–280; RM–9672]

Radio Broadcasting Services; Elaine, AR

AGENCY: Federal Communications Commission.

ACTION: Final rule.

SUMMARY: This document allots Channel 238A to Elaine, Arkansas, as that community's first local aural transmission service in response to a petition for rule making filed on behalf of Phillips County Broadcasting. *See* 64 FR 51285, September 22, 1999. Coordinates used for Channel 238A at Elaine, Arkansas, are 34–22–52 NL and 90–45–56 WL. With this action, the proceeding is terminated.

DATES: Effective May 1, 2000. A filing window for Channel 238A at Elaine, Arkansas, will not be opened at this time. Instead, the issue of opening a filing window for this channel will be addressed by the Commission in a subsequent Order.

FOR FURTHER INFORMATION CONTACT: Nancy Joyner, Mass Media Bureau, (202) 418–2180.

SUPPLEMENTARY INFORMATION: This is a synopsis of the Commission's Report and Order, MM Docket No. 99–280, adopted March 8, 2000, and released March 17, 2000. The full text of this Commission decision is available for inspection and copying during normal business hours in the FCC's Reference Information Center (Room CY–A257), 445 Twelfth Street, SW., Washington, DC. The complete text of this decision may also be purchased from the Commission's copy contractor, International Transcription Service, Inc., 1231 20th Street, NW., Washington, DC 20036, (202) 857–3800.

List of Subjects in 47 CFR Part 73

Radio broadcasting.

Part 73 of Title 47 of the Code of Federal Regulations is amended as follows:

PART 73—[AMENDED]

1. The authority citation for part 73 continues to read as follows:

Authority: 47 U.S.C. 154, 303, 334, 336.

§ 73.202 [Amended]

2. Section 73.202(b), the Table of FM Allotments under Arkansas, is amended by adding Elaine, Channel 238A.

Federal Communications Commission.

John A. Karousos,

Chief, Allocations Branch, Policy and Rules Division, Mass Media Bureau.

[FR Doc. 00–7827 Filed 3–30–00; 8:45 am]

BILLING CODE 6712–01–P

FEDERAL COMMUNICATIONS COMMISSION

47 CFR Part 73

[DA 00–585; MM Docket No. 99–281; RM–9684]

Radio Broadcasting Services; Ringgold, LA

AGENCY: Federal Communications Commission.

ACTION: Final rule.

SUMMARY: This document allots Channel 253C3 to Ringgold, Louisiana, as that community's first local aural transmission service in response to a petition for rule making filed on behalf of Black Lake Broadcasting. *See* 64 FR 51285, September 22, 1999. Coordinates used for Channel 253C3 at Ringgold, Louisiana, are 32–19–49 NL and 93–12–33 WL. With this action, the proceeding is terminated.

DATES: Effective May 1, 2000. A filing window for Channel 253C3 at Ringgold, Louisiana, will not be opened at this time. Instead, the issue of opening a filing window for this channel will be addressed by the Commission in a subsequent Order.

FOR FURTHER INFORMATION CONTACT: Nancy Joyner, Mass Media Bureau, (202) 418–2180.

SUPPLEMENTARY INFORMATION: This is a synopsis of the Commission's Report and Order, MM Docket No. 99–281, adopted March 8, 2000, and released March 17, 2000. The full text of this Commission decision is available for inspection and copying during normal business hours in the FCC's Reference Information Center (Room CY–A257), 445 Twelfth Street, SW., Washington, DC. The complete text of this decision may also be purchased from the Commission's copy contractor, International Transcription Service, Inc., 1231 20th Street, NW., Washington, DC 20036, (202) 857–3800.

List of Subjects in 47 CFR Part 73

Radio broadcasting.

Part 73 of Title 47 of the Code of Federal Regulations is amended as follows:

PART 73—[AMENDED]

1. The authority citation for part 73 continues to read as follows:

Authority: 47 U.S.C. 154, 303, 334, 336.

§ 73.202 [Amended]

2. Section 73.202(b), the Table of FM Allotments under Louisiana, is amended by adding Ringgold, Channel 253C3.

Federal Communications Commission.

John A. Karousos,

Chief, Allocations Branch, Policy and Rules Division, Mass Media Bureau.

[FR Doc. 00–7826 Filed 3–30–00; 8:45 am]

BILLING CODE 6712–01–P

FEDERAL COMMUNICATIONS COMMISSION

47 CFR Part 73

[DA 00–585; MM Docket No. 99–283; RM–9711]

Radio Broadcasting Services; Hays, KS

AGENCY: Federal Communications Commission.

ACTION: Final rule.

SUMMARY: This document allots Channel 289C2 to Hays, Kansas, as that community's third local FM transmission service in response to a petition for rule making filed on behalf of Gatoradio Media Group, Inc. See 64 FR 51286, September 22, 1999. Coordinates used for Channel 289C2 at Hays, Kansas, are 38–57–15 NL and 99–26–43 WL. With this action, the proceeding is terminated.

DATES: Effective May 1, 2000. A filing window for Channel 289C2 at Hays, Kansas, will not be opened at this time. Instead, the issue of opening a filing window for this channel will be addressed by the Commission in a subsequent Order.

FOR FURTHER INFORMATION CONTACT: Nancy Joyner, Mass Media Bureau, (202) 418–2180.

SUPPLEMENTARY INFORMATION: This is a synopsis of the Commission's Report and Order, MM Docket No. 99–283, adopted March 8, 2000, and released March 17, 2000. The full text of this Commission decision is available for inspection and copying during normal business hours in the FCC's Reference Information Center (Room CY–A257), 445 Twelfth Street, SW., Washington, DC. The complete text of this decision may also be purchased from the Commission's copy contractor, International Transcription Service, Inc., 1231 20th Street, NW., Washington, DC 20036, (202) 857–3800.

List of Subjects in 47 CFR Part 73

Radio broadcasting.

Part 73 of Title 47 of the Code of Federal Regulations is amended as follows:

PART 73—[AMENDED]

1. The authority citation for part 73 continues to read as follows:

Authority: 47 U.S.C. 154, 303, 334, 336.

§ 73.202 [Amended]

2. Section 73.202(b), the Table of FM Allotments under Kansas, is amended by adding Channel 289C2 at Hays.

Federal Communications Commission.

John A. Karousos,

Chief, Allocations Branch, Policy and Rules Division, Mass Media Bureau.

[FR Doc. 00–7824 Filed 3–30–00; 8:45 am]

BILLING CODE 6712–01–P

DEPARTMENT OF TRANSPORTATION

National Highway Traffic Safety Administration

49 CFR Part 572

[Docket No. NHTSA–00–7052]

RIN 2127–AG78

Anthropomorphic Test Devices; 12-Month-Old Child Dummy

AGENCY: National Highway Traffic Safety Administration (NHTSA), Department of Transportation.

ACTION: Final rule.

SUMMARY: This document adopts design and performance specifications for a new 12-month-old infant dummy. The new dummy is especially needed to evaluate the effects of air bag deployment on children who are in rear-facing child restraints installed in the front passenger seat of vehicles. It will also provide greater and more useful information in a variety of crash environments to evaluate child safety. Adopting the dummy is a step toward using it in the tests we conduct to determine compliance with our safety standards. The use of the dummy in our compliance tests is being addressed in separate rulemaking proceedings.

DATES: The amendment is effective on May 30, 2000. The incorporation by reference of certain publications listed in the regulations is approved by the Director of the Federal Register as of May 30, 2000.

Petitions for reconsideration of the final rule must be received by May 15, 2000.

ADDRESSES: Petitions for reconsideration should refer to the docket number and notice number of the notice and be submitted to: Administrator, room 5220, National Highway Traffic Safety Administration, 400 Seventh Street, SW., Washington, DC 20590.

FOR FURTHER INFORMATION CONTACT: For nonlegal issues: Stan Backaitis, Office of Crashworthiness Standards (telephone: 202–366–4912). For legal issues: Deirdre R. Fujita, Office of the Chief Counsel (202–366–2992). Both can be reached at the National Highway Traffic Safety Administration, 400 Seventh St., S.W., Washington, D.C., 20590.

SUPPLEMENTARY INFORMATION: This document amends our regulation for Anthropomorphic Test Devices (49 CFR Part 572) by adding Subpart R, containing specifications for a new, more advanced 12-month-old infant test dummy. The new dummy is more representative of humans than the dummies representing younger infants in Part 572, and allows the assessment of the potential for more types of injuries in automotive crashes. The new dummy can be used to evaluate the effects of air bag deployment on children in rear-facing child restraints and potentially on out-of-position children, and can provide a fuller evaluation of the performance of child restraint systems in protecting young children.

NHTSA has already specified a number of child test dummies in Part 572, including dummies representing a newborn, a 6-month-old and a 9-month-old child (subparts K, D and J, respectively). The dummies have been used to test child restraint systems to the requirements of Federal Motor Vehicle Safety Standard No. 213 (49 CFR 571.213). These test devices enable NHTSA to evaluate motor vehicle safety systems dynamically, in a manner that is both measurable and repeatable.

Today's final rule is part of NHTSA's effort to add to and improve the child dummies specified in Part 572. We recently amended Part 572 to add new, more advanced, Hybrid III-type test dummies representing a 6-year-old and a 3-year-old child. Together with the dummy adopted today, the new child test dummies will be used in tests we are specifying in our occupant crash protection standard (49 CFR 571.208) to assess the risks of air bag deployment for children, particularly unrestrained,

improperly restrained, and improperly located children. The new child test dummies may also be incorporated into Standard No. 213 (49 CFR 571.213) for use in compliance testing of child restraint systems. Today's final rule only concerns adding the new 12-month-old dummy to Part 572. Issues relating to whether this and the other new dummies should be incorporated into the compliance tests for the motor vehicle safety standards are being addressed in separate rulemaking actions.

Summary of Final Rule

The 12-month-old dummy was developed as a child restraint air bag interaction dummy (hereinafter referred to as the CRABI 12 dummy). Its specifications consist of a drawing package that shows the component parts, the subassemblies, and the assembly of the complete dummy. It also defines materials and material treatment processes for all the dummy's component parts, and specifies the dummy's instrumentation and instrument installation methods. In addition, there is a manual containing disassembly, inspection, and assembly procedures, and a dummy drawings list. These drawings and specifications ensure that the dummies will vary little from each other in their construction and are capable of consistent and repeatable responses in the impact environment. The parts list and drawings are available for inspection in NHTSA's docket (room 5108, 400 Seventh St., S.W., Washington, D.C. 20590, telephone (202) 366–4949). (We are using NHTSA's docket because the drawings cannot be electronically scanned into the DOT Docket Management System.) Copies may also be obtained from Reprographic Technologies, 9000 Virginia Manor Road, Beltsville, MD 20705; Telephone: (301) 210–5600.

In addition to the drawings and specifications, we are establishing impact performance criteria for the CRABI 12 dummy. These criteria will serve as calibration checks and further assure the kinematic uniformity of the dummy and the absence of structural damage and functional deficiency from previous use. The criteria address head, neck, and thorax impact responses. This rule does not adopt the torso flexion requirements that we had proposed.

We have adopted generic specifications for all of the dummy-based sensors. For dummies incorporated into Part 572 in years past, the agency specified sensors by make and model. However, we believe that approach is unnecessarily restrictive and limits innovation and competition. Accordingly, consistent with the new approach taken for the sensors for the new Hybrid III-type 3-year-old, 6-year-old child and 5th percentile female adult dummies, we are adopting generic specifications for the sensors. These generic specifications reflect performance characteristics of sensors used in our evaluation tests of the dummy, which are identified by make and model in a NHTSA technical report ''Development and Evaluation of the CRABI 12-month-old Infant Dummy.'' A copy of this report is in the docket for the notice of proposed rulemaking that we published for this final rule (Docket No. 99–5156). Those sensor characteristics were also the basis for our discussions with a special task force of the SAE J211 Instrumentation Committee concerning the dummy.

Background

Air bag fatalities of children have raised serious concerns about how best to evaluate the safety of children in a variety of crash environments. We have been working with the automotive industry to assure greater safety in motor vehicles through the development, evaluation and application of significantly improved occupant protection technologies. As part of our overall program to achieve greater safety, we have sought to evaluate, for possible inclusion into our safety standards, new and improved test devices to evaluate the relationship between observed injuries and the forces causing them. One of the new test devices is a 12-month-old infant dummy.

The dummy was developed through the efforts of the Society of Automotive Engineers (SAE) Child Restraint Air Bag Interaction (CRABI) Task Force. The CRABI Task Force had determined that a new infant dummy was needed for testing and evaluating the effects of child restraints and air bags, as well as their interaction, on infants. The new dummy had to be capable of evaluating both rear facing and forward facing child restraints, as well as the injury potential of air bags on out-of-position children.

The SAE subsequently developed a 12-month-old infant dummy. The dummy's initial configuration and biomechanical response corridors were based on anthropometry and mass distribution of 12-month-old infants and on scaling techniques from the larger size Hybrid III-type dummies. The scaling reflected differences in geometry and dimensional characteristics of particular body segments and their elastic properties. Our initial evaluation of the dummy in 1996 revealed some structural and performance deficiencies which the SAE later remedied with substantial modifications to the dummy. The dummy continued to be modified until September 1998.

In the latter part of 1998, based on the results of an agency test program evaluating the 12-month-old dummy, we tentatively concluded that the dummy was ready for incorporation into Part 572. On March 8, 1999, we published an NPRM proposing to incorporate the CRABI 12 dummy into Part 572 as Subpart R, and invited comments (64 FR 10965)(Docket NHTSA–99–5156). The original 45-day comment period was extended on April 22, 1999, to June 22, 1999 (64 FR 19742), in response to a request for an extension of the comment period.

Comments on the NPRM

We received comments from seven organizations and one individual: Robert A. Denton, Inc. (Denton), TRW Vehicle Safety Systems Inc. (TRW), Advocates for Highway and Auto Safety (Advocates), Toyota Technical Center, USA, Inc. (Toyota), Transportation Research Center, Inc. (TRC), the Alliance of Automobile Manufacturers (Alliance), the SAE Dummy Testing Equipment Subcommittee (DTES), and Gelsys Perez, a private citizen. General Motors (GM) submitted test data to the docket for this rulemaking on January 25, 2000.

Advocates and Gelsys Perez expressly supported the incorporation of the CRABI 12 dummy into our regulations. The Alliance, Toyota, and Denton (a manufacturer of load cells used in crash dummies) generally supported the proposal with technical comments to correct or clarify various specifications in the regulatory text proposed for the dummy. TRC and TRW commented on technical aspects of the proposal. GM submitted neck calibration test data to supplement data provided by the Alliance. In general, the comments addressed the following issues: calibration requirements and procedures, instrumentation specifications, dimensional changes to dummy drawings, and the dummy's user's manual.

In addition to comments on specific aspects of the proposal, TRW suggested that it is premature for the agency to proceed with rulemaking and suggested ''a delay of at least 12 months to allow the industry time to test the dummy * * * to assess the appropriateness of the dummy as a compliance tool.'' TRW believes that the industry has had insufficient time to test the CRABI 12 to ascertain performance and reliability

due to the unavailability of the latest dummy configuration from the manufacturer. The commenter contends that it has been unable to test the dummy under the requirements proposed in the agency's advanced air bag rulemaking (Docket NHTSA 98–4405, Notice 1) and therefore cannot make judgments as to the suitability of the CRABI 12 dummy for these test conditions.

We do not agree that this rulemaking should be delayed a year. Since the issuance of the NPRM, TRW has had sufficient time to procure a dummy and conduct enough tests to assess the dummy's appropriateness as a compliance tool. The dummy specified today differs very little from the dummy specified in the NPRM. There has been an ample supply of the dummy for parties to test and a sufficient amount of time to test. Since publication of the NPRM, GM has tested two dummies and has submitted its data to the docket (see 99–5156–14). Delaying this rulemaking would postpone use of the dummy in our compliance tests evaluating the injury causing potential of air bags on infants. Because the dummy has been shown to be a reliable test instrument time after time in rigorous testing, as discussed in a technical report cited in the NPRM,[1] we believe that delays in using the dummy for evaluating the safety of air bags cannot be justified.

Calibration Requirements and Procedures

Head

To calibrate the dummy's head, the agency proposed requirements for the head's response in drops onto the forehead and onto the rear of the head (§ 572.152). The head response on the forehead was proposed to be unimodal (*i.e.,* consisting of an acceleration-time curve which has only one prominent peak) and not less than 100 g or more than 120 g; the response on the back of the head was proposed to be not less than 55 g or not more than 71 g. The regulatory text proposed for the CRABI 12 dummy stated that the resultant acceleration versus time history curve shall be unimodal, and the oscillations occurring after the main pulse must be less than 10 percent of the peak resultant acceleration.

In its comments, TRW states that results from head drop tests indicate that a 10 percent limit on subsequent peaks after the first peak resultant acceleration is not sufficient for the dummy. TRW believes that none of the data presented by the agency, except for one rear impact test, met the 10 percent oscillation limit of the peak resultant head acceleration. The commenter suggests that a 15 to 20 percent oscillation limit of subsequent peaks would be more appropriate.

Similarly, TRC (a test facility that uses and calibrates test dummies) notes that the oscillation requirement should be changed because the 10 percent-of-peak definition does not fit the data beyond the primary peak. The commenter further states that truncating the time frame does not seem advisable. The commenter provided test data consisting of two head drop resultant acceleration plots, one front and one rear, that illustrate typical curves which have second or third peaks exceeding 10 percent of the first peak. The commenter states that the DTES has determined that 17 percent for front and 16 percent for rear would be more appropriate and suggests changing the requirement to reflect these values.

The Alliance also believes that the 10 percent limit on subsequent oscillations cannot be met. The commenter suggests that a limit of 20 percent is appropriate.

We agree that the 10 percent oscillation limit should be widened for this dummy. We proposed the 10 percent unimodal requirement based on our experience with dummies having metallic skulls. However, the CRABI 12 dummy's head has a non-metallic skull which responds in drop tests with a lower natural frequency and with less structural damping than heads with aluminum skulls,[2] which makes it more difficult to meet the 10 percent limit on oscillatory responses. Upon reevaluation of our test data, we agree that oscillatory head accelerations following the primary response peak could be as high as 14.5 percent in frontal impacts and 13.6 percent in rear impacts, as compared to an aluminum skull (with a vinyl skin cover) at less than 10 percent. Considering the head drop test data on a statistical basis, values of subsequent accelerations at 2 standard deviations (s.d.) could result in oscillation peaks as high as 16.4 percent in frontal impacts and 15.4 percent in rear impacts. Accordingly, this final rule specifies that for both frontal and rear head drop tests, oscillations occurring after the main pulse must be less than 17 percent of the peak resultant acceleration.

The regulatory text proposed for the CRABI 12 dummy specifies in section 572.152(c)(5) a two-hour wait between successive tests on the same head. TRC suggests that the waiting period should be changed to apply only to successive tests on the same side of the head (front or rear). We agree that the two-hour waiting time need apply to only head drops on the same side. The skin on the head needs a recovery period between tests, but a recovery time is not needed if the test is conducted on the opposite sides of the head. Thus, to allow testing of the head to proceed more expeditiously, this rule specifies that the two-hour waiting period applies to successive tests of the head assembly ''at the same impact point.''

Neck Flexion and Extension

For calibration, the agency proposed a pendulum mounted headform-neck assembly impact test and corresponding neck flexion and extension performance requirements (§ 572.153).

Neck Flexion Calibration Requirements

For flexion, the regulatory text proposed for the CRABI 12 dummy stated that:

(1) plane D of the headform must rotate in the direction of preimpact flight with respect to the pendulum's longitudinal centerline not less than 75 degrees and not more than 89 degrees occurring between 42 milliseconds (ms) and 56 ms from time zero; (2) the peak moment about the occipital condyles must not be less than 37 Newton meters (N-m) and not more than 45 N-m occurring within the minimum and maximum rotation interval; and (3) the positive moment shall decay for the first time to 5 N-m in the time frame between 60 ms and 80 ms.

TRW, TRC and the Alliance suggest that according to DTES-compiled data, some of the proposed calibration corridors need to be adjusted to incorporate a larger sampling of tested necks. The commenters recommend the following adjustments: Maximum rotation between 75 and 86 degrees; time at peak rotation between 49 and 57 ms; peak moment during the specified rotation interval not less than 34 and not more than 47 Nm; and moment decay time to 5 N-m (from time zero) not less than 66 and not more than 78 ms. The commenters state that these corridors are based on the statistical average of the DTES data ± two standard deviations.

Maximum rotation. We are lowering the upper limit of the headform peak rotation corridor by three degrees from

[1] ''Development and Evaluation of the CRABI 12-Month-Old Infant Crash Test Dummy (January, 1999 version).''

[2] We do not believe the lower natural frequency of this dummy's head has any significant consequences on the test results, unless the dummy's head was going to impact rigid objects. Test results in a variety of child restraints with and without head impact as well as in air bag out-of-position deployments did not indicate any resonance-associated problems that would have affected the impact measurements.

the proposal of 89 degrees to 86 degrees while retaining the lower limit at 75 degrees. The suggested narrower rotation range is based on a statistical analysis of a much larger data base than that available to the agency at the time the NPRM was published and thus is likely to be more representative of actual performance. Further, it limits variability to approximately 7 percent which is in the ''good'' performance range. It also is in agreement with the range proposed by the commenters.

Time at peak rotation. The regulatory text proposed for the CRABI 12 dummy specified headform rotation versus time requirements in § 572.153(b)(1)(i) that were identical in concept to the requirements for the 3-year-old child dummy specified in Subpart C of Part 572. TRW, TRC and the Alliance suggested changes to the requirements. Upon further consideration, we have decided to delete the headform rotation versus time requirement altogether. When the Subpart C dummy was added to Part 572 in 1979, a means of measuring bending moments in the neck and combining them with the motion of the head was not available. However, in 1991 a moment-measuring load cell became available for this dummy. With the availability of a six-axis load cell for the CRABI 12 dummy, it became possible to measure the peak moment and to relate it to the rotation of the headform. This made the headform displacement-rotation versus time requirement redundant. We believe that specifying a minimum-maximum peak moment within a maximum headform rotation window is sufficient to control the dynamic properties of the neck (to control head kinematics), and that headform rotation in time requirement would serve no purpose. Accordingly, this final rule does not adopt the proposed headform rotation versus time requirements.

Peak moment during rotation interval. TRW, TRC and the Alliance suggested that the proposed peak moment of 37–45 N-m within the maximum headform rotation corridor should be revised to a range between 34 and 47 N-m. The commenters indicate that the recommendation of the wider peak moment corridor is based on DTES-compiled data ± 2 s.d. However, they do not indicate if the moments listed by DTES were peak moments at the maximum headform rotation or peak moments within the allowed time corridor. Upon receiving these comments, we reviewed the DTES reported data summary in Attachment 11 of the DTES meeting minutes of April 14, 1999 (a copy of which is in the docket for the NPRM, Docket 99–5156). The data indicate that the average performance for 23 necks was 40.19 N-m ± a 2.31 s.d., leading to a response range of 35.56 N-m to 44.81 N-m. It is accepted practice in the biomechanics community to judge the adequacy of a component's variability in subsystems tests as 0–5% being in the excellent range, 5–8% good, 8–10% marginally acceptable and above 10% not acceptable. Using the 10% value as the maximum allowable variability and rounding the values to the lowest and the highest next numbers, we believe that the existing data support neck performance at 36 N-m at the lower limit and 45 N-m at the upper limit. We are accordingly specifying that range.

Moment decay time to 5 N-m (from time zero). TRW, TRC and the Alliance suggested reducing the time corridor for the positive moment decay at the first 5 N-m from the proposed range of 60–80 ms to 66–78 ms. While these test value recommendations are supported by the test data, we believe the data sample is still too small to justify the adoption of narrower corridor limits. Also, we do not know how narrowing the corridor might affect the rejection rate of manufactured necks. Further, we see no evidence that narrowing the corridor would lead to better performing necks. Accordingly, we are adopting the time duration for moment decay as proposed in the NPRM.

TRC suggested that the requirements be clarified to specify that the peak moment occurs during the time the angle is between the ''passing'' head displacement-rotation limits, rather than time limits. The commenter also suggested it would be clearer to specify that the moment of interest is not the Y-axis moment which reads directly from the load cell, but is a calculated moment reflecting its correction to the occipital condyle. TRC suggested including the actual equation for moment calculation.

The regulatory text proposed for the CRABI 12 dummy specifies in section 572.153(b)(1)(ii) that the moment is to be calculated about the occipital condyle. While the proposed regulatory text does not expressly provide the equation to be used, the proposed text incorporates by reference SAE J1733 ''Sign Convention for Vehicle Crash Testing,'' which includes the equation for moment calculation. The document also defines the proper polarities of the signal measured in a crash test which are critical to the calculation of the moment about the occipital condyle. Nonetheless, because the regulatory text for the Hybrid III-type 6-year-old child and 5th percentile female adult dummies include an equation for moment calculation, we have added the equation to the text for the CRABI 12 dummy. Accordingly this final rule adopts the following language in new § 572.153(b)(1)(iii): ''The moment shall be calculated by the following formula: Moment (Nm) = My − (0.005842m)×(Fx), where My is the moment about the y-axis, Fx is the shear force measured by the neck transducer (drawing SA572–S23) and 0.005842m is the distance from the point at which the load cell measures the force to the occipital condyle.''

Neck Extension Calibration Requirements

For extension, the regulatory text proposed for the CRABI 12 dummy specified that: (1) Plane D of the head must rotate in the direction of preimpact flight with respect to the pendulum's longitudinal centerline not less than 78 degrees and not more than 90 degrees occurring between 58 ms and 66 ms from time zero; (2) the peak negative moment about the occipital condyles must have a value not more than −11 N-m and not less than −23 N-m occurring within the minimum and maximum rotation interval; the negative moment shall decay for the first time to −5 N-m in the time frame between 78 and 90 ms after time zero.

TRW, TRC and the Alliance, referring to DTES data, indicate that some of the calibration corridors need to be adjusted to reflect a larger sampling of tested necks. These commenters believe that the neck extension calibration corridors be based on DTES-developed values as follows: Maximum rotation should be 81–92 degrees; time at peak rotation should be 67–78 ms; peak moment during the specified rotation interval should be −12 to −23 Nm; and moment decay time to −5 N-m (from time zero) should be 76–84 ms. The commenters state that these corridors are based on the statistical average of the DTES data ±2 s.d.

Maximum rotation. The three commenters recommended adjusting the headform peak rotation corridor from the proposed 78–90 degree range to 81–92 degrees. Our review of the furnished additional data support an upward shift of the proposed range. However, the data also show that the lower limit should be set at 80 degrees rather than at 81 degrees. Setting the limit at 81 degrees would fail a greater number of necks, even though those necks would be considered satisfactory on a statistical basis. Accordingly, the new rotation corridor is set at 80–92 degrees.

Time at peak rotation. The regulatory text proposed for the CRABI 12 dummy specified headform extension rotation versus time requirements in

§ 572.153(b)(2)(i) that were identical in concept to the requirements for the 3-year-old child dummy specified in Subpart C of Part 572. As discussed in the previous section on neck flexion requirements, we believe that specifying a minimum-maximum peak moment within a maximum headform rotation window is sufficient to control the dynamic properties of the neck (to control of head kinematics) without the need to establish redundant specifications for headform rotation versus time. Accordingly, this final rule does not adopt the proposed headform rotation versus time requirements.

Peak moment during rotation interval. The three commenters suggested that the NPRM's proposed peak moment of −11(−)−23 N-m within the maximum headform rotation corridor should be revised to −12(−)−23 N-m. Based on our analysis of all of the available test data, we agree with the suggestion to reduce the width of the peak moment corridor, and accordingly adopt acorridor of −12(−)−23 N-m.

Moment decay time to 5 N-m (from time zero). TRW, TRC and the Alliance suggested that we reduce the time corridor for the negative moment decay at the first −5 N-m from 78–90 ms to 76–84 ms. We agree that the data show that the lower limit of the time corridor should be lowered to 76 ms. However, we see no benefit in narrowing its range. Narrowing the range would fail a greater number of necks, even though those necks perform satisfactorily in all other respects. The commenters have not provided nor do we have any evidence that a narrower corridor at 76–84 ms would lead to better performing necks. Accordingly, this final rule reduces the lower limit to 76 ms while retaining the upper time limit at 90 ms.

In response to TRC's comment, as we did with regard to the neck flexion requirements, this final rule adopts new section 572.153(b)(2)(iii) to set forth the equation for calculating the moment. The reason for adding the equation is to clarify how the moment is calculated.

Issues Relating to Neck-Headform Test Procedure

The proposed regulatory text for the CRABI 12 dummy stated in § 572.153(c)(4)(i) that ''Time zero is defined as the time of initial contact between the pendulum striker plate and the honeycomb material. The pendulum accelerometer data channel should be at the zero level at this time.''

Toyota suggests that all data channels for the neck extension and flexion tests be set at the zero level at time zero, rather than only the pendulum accelerometer data channel, as was done for the Hybrid III-type 6-year-old and 5th percentile adult female dummies. We disagree. The CRABI 12 dummy neck is considerably more flexible than those of the 6-year-old and 5th percentile female adult dummies. As a result, the head-neck complex of the CRABI 12 dummy experiences considerable pre-impact kinematic lag as the pendulum accelerates downward towards the vertical. If all data channels, including rotation and moment channels, were made zero at impact, as Toyota suggests, the pre-impact neck rotation lag would not be accounted for in the total rotation of the neck, which would not be in line with the method by which biomechanical moment-rotation corridors were established.

The neck biomechanical response corridors were based on ''flexion'' and ''extension'' kinematics, or forward and backward bending of the neck from its neutral position, respectively, due to inertial forces of the head. In order to measure true flexion and extension of the dummy during calibration tests, the zero level of the data channels must be established prior to initiation of the drop test, when the longitudinal centerlines of the neck and pendulum are parallel to each other, i.e., when the pendulum hangs down in a vertical position. The pendulum accelerometer data channel, on the other hand, must be zeroed at time zero (the instant the pendulum engages the hexcell) in order to get the correct integrated velocity curve from which the velocity readings are taken at specific time intervals. Accordingly, as proposed in the NPRM, the final rule retains the time zero setting procedure for the pendulum data channel, but not for the neck data channels.

Toyota requested that the regulatory text specify a 30-minute recovery time between successive neck tests. The proposed regulatory text in § S572.156(m) specified a separation of 30 minutes between performance tests of the same component, segment, or assembly, which includes the neck. Accordingly, no change is needed to meet Toyota's concerns and the text is adopted as proposed.

Thorax

For calibration, we proposed a thorax response corridor in terms of peak resistance force exerted by the dummy's sternum on the penetrating impactor. The regulatory text proposed a peak force response corridor between 1600 N and 1700 N.

TRW, TRC and the Alliance believe that there is no need for this test. TRW states that the thorax consists of a rigid steel substructure with a foam pad attached to it. ''Since there are no moving parts within the chest area as well as no method by which chest displacement can be measured, a dynamic calibration test would seem inappropriate.'' TRW suggests that if NHTSA believes that a test is needed to check the foam pad, a standard ASTM compression test would be more appropriate. Further, TRW states that the proposed corridor of 1600 to 1700 N is not accurate because it was developed based on only four tests conducted on a single dummy. TRW's tests of its own dummy found that the average peak resistive force was 1830 N.

TRC states that the dummy was designed with no deflecting rib components and that a ''torso impact test when there is no chest deflection to measure gives little data; the compression characteristics of the foam can be determined without a dynamic test or by simply spelling them out as a manufacturer's specification of foam density/compression characteristics.'' The Alliance states ''It is our belief that the performance of the thorax in impact is best assured by specifying the ratio of the reactants for the foam from which the insert is molded, the method used by the manufacturer of the dummy. The foam-in-place reactant ratio is adjusted until a test block of the material exhibits the required compression force-deflection characteristic. The insert is then molded from the same mix of reactants.''

We do not agree with the suggestion to abolish the proposed thorax impact response requirement. In each of the Federal motor vehicle safety standards that use test dummies in compliance tests, one of the key injury assessment parameters is the thorax acceleration response. The suggestion that a periodic inspection test can be used in place of the proposed thorax impact test provides no assurance that the available material in conjunction with the supporting thorax structure will be capable of consistent and repeatable impact response. This assurance is particularly needed for thorax impacts because foams degrade with the number of test applications, different loading levels, and time. We do not know of any ASTM load-deflection tests for foams that would consistently correlate with dynamic-impact responses as installed and used on the dummy over time, and no information on that issue has been provided by the commenters. Accordingly, we are adopting a dynamic impact response requirement in the regulatory text for the CRABI 12 dummy.

The Alliance and TRW disagree with the peak force measurements proposed

in the regulatory text for the dummy. The Alliance suggests revising the thorax impact specification from the proposed 1600–1700 N level to 1526–1880 N. While TRW states that it ran impact tests on its own dummy and found the average peak resistance force to be 1830 N, TRW did not provide data to support this claim. Data in the minutes of the DTES meeting of June 2, 1999, provide a compilation of impact test results from three groups of dummies tested at three different facilities. The average response value for those test was 1695 N with a s.d. of 89 N, suggesting a response corridor, based on 2 s.d., between 1517 N and 1872 N. The majority of the data (16 dummies) were from FTSS, and three were from other users.

An indication of what can be expected from a reasonably controlled batch of foams is found in early data from the combined NHTSA and FTSS tests, as reported in DTES minutes of April 14, 1999. NHTSA tested one dummy and FTSS tested three. These tests yielded an average response of 1670 N with a s.d. of 63. Subsequently reported data from General Motors (DTES minutes of June 2, 1999), based on two dummies, yielded an average response 1622 N with an s.d. of 54. The latter two test series suggest corridor widths based on 2 s.d. at 1544–1796 N for the former and 1514–1730 for the latter. Based on these two test series, we believe that with some controls at the dummy manufacturer level, the dummies can meet a response range of 1514–1796 N. This suggested corridor would be larger than that proposed in the regulatory text, but it would reflect a more realistic data base, and it would be in the good to marginal acceptance range at 8.5 percent.

TRC states that the pendulum used in the thorax impact test should be specified in ''generic'' terms. We agree. In response to similar comments in our rulemakings on the Hybrid III-type 3-year-old, 6-year-old and 5th percentile adult female dummies, we have developed generic impactor specifications for those new dummies. Similar to what we have done with respect to the impactor specifications in those rulemakings, this final rule describes the thorax impactor using generic specifications.

TRC suggests that the positioning of the dummy in the thorax assembly test procedure needs to be modified to match the placement shown in proposed Figure R5. The proposed regulatory text (§ 572.154(c)(3)) stated that the dummy is positioned with fingers barely touching the seating surface plane. However, Figure R5 showed the dummy's fingers as well above the seating surface. We agree that the dummy's arms are too short for the fingers to touch the seating surface plane and have made the necessary corrections to § 572.154(c)(3).

The regulatory text proposed for the CRABI 12 dummy specifies that the dummy is dressed in a light-weight cotton stretch short-sleeve shirt and above-the-knee pants for the thorax impact test (§ 572.154(c)(2)). TRC states that these specifications for the clothing do not match the drawing package for the dummy. The commenter also states that it believes that all tests of the dummy have been run with the dummy in long-sleeved and ankle length clothing. Upon reviewing our testing experience with the dummy, we agree that the clothing that has been used consisted of long-sleeved shirt and long-legged pants. We have revised the paragraph in question to refer to such clothing, and have included a limit on how much the clothing may weigh. That specification more precisely describes the clothing that is used on this dummy.

Torso

The regulatory text proposed for the CRABI 12 dummy specified in § 572.155 the following torso flexion test and performance requirements: (1) When the torso is flexed 45 degrees from vertical, the resistance force must not be less than 90 N and not more than 120 N, and (2) upon removal of the force, the upper torso assembly returns to within 10 degrees of its initial position.

TRW, TRC and the Alliance question the need for this procedure in view of the anticipated use of the CRABI 12 test dummy in compliance tests. These commenters believe that the dummy will likely be used only when restrained in a rear-facing child restraint system, and thus there is no need to determine the flexion articulation between upper and lower halves of the torso assembly. The commenters suggest that periodic inspections would be adequate to assure the dummy's performance instead of a calibration test.

While we agree with the commenters that the dummy in crash tests will likely be restrained in a rear-facing child restraint, we had proposed the torso flexion test primarily to address an overall variability problem. At the time the NPRM was issued, we believed that a dummy's torso flexion stiffness could substantially influence the variability of the dummy's impact response when the dummy's upper torso moved considerably with respect to the lower half of the torso. In response to the comments received on this issue, we conducted additional sled tests in January 2000 and found that the dummy's response variability we had initially observed was caused by insufficient support of the child restraint seat back on the standard seat assembly. Once the child restraint was provided sufficient support, there was a substantial reduction in the dummy's impact response variability. (We have placed a report of this testing in the docket for this final rule.) Accordingly, we agree with the commenters that the torso flexion stiffness test is not needed, and that periodic inspections will be adequate to assure the dummy's structural integrity and performance consistency. Such inspection will be included in the Procedures for Assembly, Disassembly and Inspection (PADI) document (see discussion below on the PADI). Accordingly, we have not adopted the torso flexion requirement as proposed in § 572.155.

Other Issues Relating to Calibration Requirements and Procedures

Post-Test Calibration Requirement

The Alliance suggests that the specifications for the CRABI 12 dummy should include a requirement that the dummy meet calibration specifications following a NHTSA compliance test. The commenter states that Part 572 has such a requirement for dummies adopted in years past, while recent rulemakings on the new Hybrid III-type 3-year-old, 6-year-old, and 5th percentile female adult have not included such a requirement. The Alliance believes that the post-test dummy state of compliance is very important because test results indicating a noncompliance may be dummy-related. Without post-test dummy verification (calibration), the commenter claims, no one can determine with reasonable certainty whether a non-compliance is due to a test dummy anomaly or to the vehicle's safety deficiency.

We disagree. The pre-test calibration should adequately address the suitability of the dummy for testing. We are concerned that the post-test calibration requirement could handicap and delay our ability to resolve a potential vehicle or motor vehicle equipment test failure solely because the post-test dummy might have experienced a component failure and might no longer conform to all of the specifications. On several occasions during the past few years, a dummy has been damaged during a compliance test such that it could not satisfy all of the post-test calibration requirements. Yet the damage to the dummy at the time it occurred did not affect the dummy's

ability to accurately measure the performance requirements of the standard. We are also concerned that the interaction between the vehicle or equipment and the dummy could be directly responsible for the dummy's inability to meet calibration requirements. In such an instance, the failure of the test dummy should not preclude the agency from seeking a compliance investigation. Thus, we conclude that a post-calibration requirement would not be in the public interest, since it could impede our proceeding with a compliance investigation in those cases where the test data indicate that the dummy measurements were not markedly affected by the dummy damage or that some aspect of the vehicle or its equipment design were responsible for the dummy failure.

TRC also asks that a provision be added to the test procedure to specify that a light coat of talcum powder is applied to the headform skin to reduce the tackiness of the urethane. The agency has addressed the powdering question during the formulation of the Part 572 Subpart B rulemaking (50th percentile male) and has evaluated its merits in this rulemaking. We rejected the powdering issue on the basis of subjectivity of the procedure, which could unnecessarily complicate compliance tests in which the CRABI 12 dummy is used. Additionally, we believe that powder is neither needed nor helps to assure consistent head performance. We found no benefits or advantages in using the powder. Accordingly, we have not adopted the suggested change.

Instrumentation

The agency proposed generic specifications for all of the dummy-based sensors, which included—

(1) head, thorax, and pelvis accelerometers designated in drawing SA572–S4 and shown in drawing 921022–000;

(2) force and/or moment transducers:

(a) pubic load cell SA572–S24,

(b) lumbar spine and neck force moment transducer SA572–S23, and

(c) shoulder load cell SA572–S25.

Comments on proposed generic sensors were received from the Alliance and Denton. The Alliance supports the intent of the agency in proposing generic specifications, but finds the specifications not sufficiently generic. Denton commented on the need to revise specifications in drawings SA572–S23, –S24, –25, and 921022–35 (pelvis structure weldment).

Weight Specifications

Denton recommends changing the weights of the specified load cells in SA572–S23, –S24 and –S25. Denton also believes that several drawings should indicate a maximum weight, and not a nominal weight. We concur with this suggestion. While we would prefer to establish nominal weights for the load cells,[3] there is no acceptable method of weighing the load cells, particularly those containing integral cables. Because of this, weight tolerances for the load cells could not be established. Until an acceptable weighing procedure is developed, dummy manufacturers must take into account the variabilities of load cell weights to assure that each subsystem weight specification, as shown in sheet 5 of drawing 921022–000, is met. Accordingly, we have specified in the sensor drawings only maximum weights, as follows:

—Drawing SA572–23 (neck and lumbar spine)—0.34 lb maximum (each);

—Drawing SA572–24 (pubic)—0.58 lb maximum; and

—Drawing SA572–25 (shoulder)—0.14 lb maximum.

Denton also suggests that the load cell weight specifications should clarify that the specified weight does not include any cable or mounting hardware, except as noted. We disagree with this suggestion. All of the load cells specified by the agency include weights associated with 8 in. of cable length.

Accelerometer Specifications

The Alliance supports our intent to propose generic specifications for sensors to reduce the restrictive nature of instrumentation specifications seen in the past. However, the commenter believes that the proposed sensor specifications are not sufficiently generic. The commenter states that the generic specifications would require the use of a certain model made by a specific manufacturer, having a particular seismic mass and mounting hole configuration. The commenter notes that other accelerometers might be acceptable but can not be used under the proposed specification. The Alliance suggests that the agency develop a more functional description.

We are aware of at least two manufacturers that have in the past or are now marketing accelerometers that match the specifications listed in the drawings. The specific hole patterns are needed for mounting the accelerometers in several locations in this dummy as well as all of the other Part 572 dummies. Although the sensing mass of the accelerometer is defined relative to its attachment surface, hole patterns and mounting platform dimensions need to be known to assure the existence of compatible space, mating surfaces and methods of attachment in the areas where the accelerometers are to be mounted. In addition, shock and vibration standards require that matching mounting surfaces and attachments have structural integrity for vibration control purposes which we believe are sufficiently defined in the drawing package. While the Alliance's suggestion that the agency develop a ''more functional description'' of the sensors is attractive as a concept and warrants further study, we do not believe that the technology is sufficiently developed for implementation at the present time.

Pubic Load Cell Mounting

Denton suggests changes to drawing 921022–035 to specify an orientation of two tapped holes in the pelvic structure weldment to accommodate the mounting of the pubic load cell SA572–S24. If that is not done, Denton states, it will not be possible to insert a wrench through the access holes in the load cell to loosen the set screws which thread into detail 3 of drawing 921022–035. Denton suggests that ''the top surface of the weldment (which is ground flat to within 0.001) be indicated as datum A, and that a callout be added indicating that the centerlines of the holes are perpendicular to the datum surface A within 0.020 inches.''

We agree with the comment and have revised drawing 921022–35 in line with the suggested changes.

Accelerometer Frequency Response

Denton, in its comments on frequency response for the Hybrid III-type 5th percentile female adult dummy (Docket No. NHTSA–1998–4283–10), suggests adding a note on each of the sensor drawings indicating ''* * *what CFC channel class should be used for recording data with that type of transducer.'' This is a reasonable suggestion, since the SAE J211 clearly deals with the entire data channel and not with a particular sensor within the data channel. Accordingly, a note has been added to the drawings saying that ''Signal output must be compatible with and recordable in the data channel defined by SAE J211.''

[3] Load cell weights with only ''maximum'' weight designations could vary considerably. While not specifying a minimum load cell weight may not matter much for larger adult test dummies, lack of such a specification poses a potentially larger problem for the smaller child test dummies.

Title and Features of the Procedures for Assembly, Disassembly and Inspection

The preamble for the NPRM on the CRABI 12 dummy notes that the final rule package will contain a ''User's Manual'' for the dummy. The manual would contain identified procedures on how to inspect, assemble and disassemble the dummy, similar to procedures published for other Part 572 dummies. Responding to this issue, DTES noted that it has developed a User's Manual for this dummy and suggested its incorporation into Part 572. There are a number of reasons why we decline to incorporate the DTES User's Manual as a reference document.

DTES's manual contains, besides inspection and assembly procedures, several calibration procedures and response requirements. Calibration procedures and response requirements are set forth by this final rule in Part 572. It is not advisable to reference a document which could contain calibration procedures and response requirements that may be inconsistent or in conflict with the Part 572 requirements. Further, while the DTES manual appears to be reasonably well developed and well suited for research use, it has a number of redundancies and ambiguities which render it less suited for regulation and compliance testing purposes. Further, the DTES User's Manual is copyrighted by both the SAE and FTSS, which restrict its use and distribution as a public document.

Because we concluded that the DTES manual should not be incorporated into Part 572, we generated and incorporated into Part 572 our own document which is limited to addressing procedures for inspection, assembly and disassembly of the CRABI 12 test dummy. We have titled the document *Procedures for Assembly, Disassembly and Inspection (PADI), Subpart R, CRABI 12-month-old Infant Crash Test Dummy (CRABI–12, Alpha version), March 2000.* Our incorporation of the PADI does not prevent anyone from using the procedures contained in the DTES User's Manual. However, persons using the DTES document in tests assuring compliance with our safety standards are responsible for ensuring that the test dummies they use meet the specifications adopted today and are suitable for compliance testing.

Nomenclature

The CRABI 12 test dummy is incorporated in Part 572 as Subpart R. Today's final rule designates the dummy adopted today as the alpha version. Further significant changes to the dummy will be designated as beta, gamma, etc., to assure that modifications can be easily tracked and identified.

Regulatory Analyses and Notices

Executive Order 12866 and DOT Regulatory Policies and Procedures

This rulemaking document was not reviewed by the Office of Management and Budget under E.O. 12866, ''Regulatory Planning and Review.'' The rulemaking action is also not considered to be significant under the Department's Regulatory Policies and Procedures (44 FR 11034, February 26, 1979).

This document amends 49 CFR Part 572 by adding design and performance specifications for a new 12-month-old child dummy that we may later incorporate into Federal motor vehicle safety standards. This rule indirectly imposes requirements on only those businesses which choose to manufacture or test with the dummy, in that the agency will only use dummies for compliance testing that meet all of the criteria specified in this rule. It may affect vehicle and air bag manufacturers if it is incorporated by reference into the advanced air bag rulemaking, and may affect child restraint manufacturers if it is incorporated into the child restraint system standard.

The cost of an uninstrumented 12-month-old dummy is approximately $19,000. Instrumentation would add $15,000 to $43,000 to the cost, depending on the amount of instrumentation the user chooses to add.

Because the economic impacts of this proposal are minimal, no further regulatory evaluation is necessary.

Executive Order 13132

We have analyzed this rule in accordance with Executive Order 13132 (''Federalism''). We have determined that this rule does not have sufficient Federalism impacts to warrant the preparation of a federalism assessment.

Executive Order 13045

Executive Order 13045 (62 FR 19885, April 23, 1997) applies to any rule that: (1) Is determined to be ''economically significant'' as defined under E.O. 12866, and (2) concerns an environmental, health or safety risk that NHTSA has reason to believe may have a disproportionate effect on children. If the regulatory action meets both criteria, we must evaluate the environmental health or safety effects of the planned rule on children, and explain why the planned regulation is preferable to other potentially effective and reasonably feasible alternatives considered by us.

This rule is not subject to the Executive Order because it is not economically significant as defined in E.O. 12866. It also does not involve decisions based on health risks that disproportionately affect children.

Executive Order 12778

Pursuant to Executive Order 12778, ''Civil Justice Reform,'' we have considered whether this rule will have any retroactive effect. This rule does not have any retroactive effect. A petition for reconsideration or other administrative proceeding will not be a prerequisite to an action seeking judicial review of this rule. This rule does not preempt the states from adopting laws or regulations on the same subject, except that it does preempt a state regulation that is in actual conflict with the federal regulation or makes compliance with the Federal regulation impossible or interferes with the implementation of the federal statute.

Regulatory Flexibility Act

Pursuant to the Regulatory Flexibility Act (5 U.S.C. 601 *et seq.*, as amended by the Small Business Regulatory Enforcement Fairness Act (SBREFA) of 1996) whenever an agency is required to publish a notice of rulemaking for any proposed or final rule, it must prepare and make available for public comment a regulatory flexibility analysis that describes the effect of the rule on small entities (*i.e.,* small businesses, small organizations, and small governmental jurisdictions). However, no regulatory flexibility analysis is required if the head of an agency certifies the rule will not have a significant economic impact on a substantial number of small entities. SBREFA amended the Regulatory Flexibility Act to require Federal agencies to provide a statement of the factual basis for certifying that a rule will not have a significant economic impact on a substantial number of small entities.

I have considered the effects of this rulemaking action under the Regulatory Flexibility Act (5 U.S.C. § 601 *et seq.*) and certify that this rule will not have a significant economic impact on a substantial number of small entities. The rule does not impose or rescind any requirements for anyone. The Regulatory Flexibility Act does not, therefore, require a regulatory flexibility analysis.

National Environmental Policy Act

We have analyzed this amendment for the purposes of the National Environmental Policy Act and determined that it will not have any significant impact on the quality of the human environment.

Paperwork Reduction Act

Under the Paperwork Reduction Act of 1995, a person is not required to respond to a collection of information by a Federal agency unless the collection displays a valid OMB control number. This rule does not have any new information collection requirements.

National Technology Transfer and Advancement Act

Section 12(d) of the National Technology Transfer and Advancement Act of 1995 (NTTAA), Public Law 104–113, section 12(d) (15 U.S.C. 272) directs us to use voluntary consensus standards in its regulatory activities unless doing so would be inconsistent with applicable law or otherwise impractical. Voluntary consensus standards are technical standards (*e.g.,* materials specifications, test methods, sampling procedures, and business practices) that are developed or adopted by voluntary consensus standards bodies, such as the Society of Automotive Engineers (SAE). The NTTAA directs us to provide Congress, through OMB, explanations when we decide not to use available and applicable voluntary consensus standards.

The CRABI 12 test dummy that is the subject of this document was developed under the auspices of the SAE. All relevant SAE standards were reviewed as part of the development process. The following voluntary consensus standards have been used in developing the dummy: SAE Recommended Practice J211, Rev. Mar95 ''Instrumentation for Impact Tests''; and SAE J1733 of 1994–12 ''Sign Convention for Vehicle Crash Testing.''

Unfunded Mandates Reform Act

Section 202 of the Unfunded Mandates Reform Act of 1995 (UMRA) requires Federal agencies to prepare a written assessment of the costs, benefits and other effects of proposed or final rules that include a Federal mandate likely to result in the expenditure by State, local or tribal governments, in the aggregate, or by the private sector, of more than $100 million in any one year (adjusted for inflation with base year of 1995). Before promulgating a NHTSA rule for which a written statement is needed, section 205 of the UMRA generally requires us to identify and consider a reasonable number of regulatory alternatives and adopt the least costly, most cost-effective or least burdensome alternative that achieves the objectives of the rule.

This rule does not impose any unfunded mandates under the Unfunded Mandates Reform Act of 1995. This rule does not meet the definition of a Federal mandate because it does not impose requirements on anyone. Further, it will not result in costs of $100 million or more to either State, local, or tribal governments, in the aggregate, or to the private sector. Thus, this rule is not subject to the requirements of sections 202 and 205 of the UMRA.

Regulation Identifier Number (RIN)

The Department of Transportation assigns a regulation identifier number (RIN) to each regulatory action listed in the Unified Agenda of Federal Regulations. The Regulatory Information Service Center publishes the Unified Agenda in April and October of each year. You may use the RIN contained in the heading at the beginning of this document to find this action in the Unified Agenda.

List of Subjects in 49 CFR Part 572

Incorporation by reference, Motor vehicle safety.

In consideration of the foregoing, 49 CFR Part 572 is amended as follows:

PART 572—ANTHROPOMORPHIC TEST DUMMIES

1. The authority citation for Part 572 continues to read as follows:

Authority: 49 U.S.C. 322, 30111, 30115, 30117 and 30166; delegation of authority at 49 CFR 1.50.

2. 49 CFR Part 572 is amended by adding a new Subpart R consisting of 572.150–572.155, to read as follows:

Subpart R—CRABI 12-Month-Old Infant Crash Test Dummy, Alpha Version

Sec.

572.150 Incorporation by reference.
572.151 General description.
572.152 Head assembly and test procedure.
572.153 Neck-headform assembly and test procedure.
572.154 Thorax assembly and test procedure.
572.155 Test condition and instrumentation.

Subpart R—12-Month-Old Infant, Alpha Version

§ 572.150 Incorporation by reference.

(a) The following materials are incorporated by reference in this subpart R.

(1) A drawings and specifications package entitled ''Parts List and Drawings, Subpart R, CRABI 12-Month-Old Infant Crash Test Dummy, (CRABI–12, Alpha version), March 2000'' and consisting of :

(i) Drawing No. 921022–001, Head Assembly, incorporated by reference in §§ 572.151, 572.152, 572.154, and 572.155;

(ii) Drawing No. 921022–041, Neck Assembly, incorporated by reference in §§ 572.151, 572.153, 572.154, and 572.155;

(iii) Drawing No. TE–3200–160, Headform, incorporated by reference in §§ 572.151 and 572.153;

(iv) Drawing No. 921022–060, Torso Assembly, incorporated by reference in §§ 572.151, 572.154, and 572.155;

(v) Drawing No. 921022–055, Leg Assembly, incorporated by reference in §§ 572.151, and 572.155 as part of a complete dummy assembly;

(vi) Drawing No. 921022–054, Arm Assembly, incorporated by reference in §§ 572.151, and 572.155 as part of the complete dummy assembly;

(2) A procedures manual entitled ''Procedures for Assembly, Disassembly and Inspection (PADI), Subpart R, CRABI 12-month-old Infant Crash Test Dummy (CRABI–12, Alpha version), March 2000,'' incorporated by reference in § 572.151;

(3) SAE Recommended Practice J211/1, Rev. Mar95 ''Instrumentation for Impact Tests—Part 1—Electronic Instrumentation'', incorporated by reference in § 572.155;

(4) SAE J1733 1994–12 ''Sign Convention for Vehicle Crash Testing'', incorporated by reference in § 572.155.

(b) The Director of the Federal Register approved those materials incorporated by reference in accordance with 5 U.S.C. 552(a) and 1 CFR Part 51. Copies of the materials may be inspected at NHTSA's Docket Section, 400 Seventh Street S.W., room 5109, Washington, DC, or at the Office of the Federal Register, 800 North Capitol Street, NW, Suite 700, Washington, DC.

(c) The incorporated materials are available as follows:

(1) The drawings and specifications package referred to in paragraph (a)(1) of this section and the procedures manual referred to in paragraph (a)(2) of this section are available from Reprographic Technologies, 9000 Virginia Manor Road, Beltsville, MD 20705 (301) 419–5070.

(2) The SAE materials referred to paragraphs (a)(3) and (a)(4) of this section are available from the Society of Automotive Engineers, Inc., 400 Commonwealth Drive, Warrendale, PA 15096.

§ 572.151 General description.

(a) The 12-month-old-infant crash test dummy is described by drawings and specifications containing the following materials:

(1) Technical drawings and specifications package 921022–000

(refer to § 572.150(a)(1)), the titles of which are listed in Table A of this section;

(2) Procedures for Assembly, Disassembly and Inspection document (PADI) (refer to § 572.150(a)(2)).

(b) The dummy consists of the component assemblies set out in the following Table A:

TABLE A

Component assembly	Drawing number
Head Assembly	921022–001.
Neck Assembly (complete).	921022–041.
Torso Assembly	921022–060.
Leg Assembly	921022–055 R&L.
Arm Assembly	921022–054 R&L.

(c) Adjacent segments of the dummy are joined in a manner such that, except for contacts existing under static conditions, there is no contact between metallic elements throughout the range of motion or under simulated crash impact conditions.

(d) The structural properties of the dummy are such that the dummy shall conform to this Subpart in every respect before its use in any test under this chapter.

§ 572.152 Head assembly and test procedure.

(a) The head assembly (refer to § 572.150(a)(1)(i)) for this test consists of the assembly (drawing 921022–001), triaxial mount block (SA572–80), and 3 accelerometers (drawing SA572–S4).

(b) Frontal and rear impact.

(1) Frontal impact. When the head assembly in paragraph (a) of this section is dropped from a height of 376.0±1.0 mm (14.8±0.04 in) in accordance with paragraph (c)(3)(i) of this section, the peak resultant acceleration measured at the head CG shall not be less than 100 g or more than 120 g. The resultant acceleration vs. time history curve shall be unimodal, and the oscillations occurring after the main pulse shall be less than 17 percent of the peak resultant acceleration. The lateral acceleration shall not exceed ±15 g's.

(2) Rear impact. When the head assembly in paragraph (a) of this section is dropped from a height of 376.0±1.0 mm (14.8±0.04 in) in accordance with paragraph (c)(3)(ii) of this section, the peak resultant acceleration measured at the head CG shall be not less than 55 g and not more than 71 g. The resultant acceleration vs. time history curve shall be unimodal, and the oscillations occurring after the main pulse shall be less than 17 percent of the peak resultant acceleration. The lateral acceleration shall not exceed ±15 g's.

(c) Head test procedure. The test procedure for the head is as follows:

(1) Soak the head assembly in a controlled environment at any temperature between 18.9 and 25.6 °C (66 and 78 °F) and at any relative humidity between 10 and 70 percent for at least four hours prior to a test. These temperature and humidity levels shall be maintained throughout the entire testing period specified in this section.

(2) Before the test, clean the impact surface of the head skin and the steel impact plate surface with isopropyl alcohol, trichlorethane, or an equivalent. Both impact surfaces shall be clean and dry for testing.

(3)(i) For a frontal impact test, suspend the head assembly with its midsagittal plane in vertical orientation as shown in Figure R1 of this subpart. The lowest point on the forehead is 376.0±1.0 mm (14.8 ±0.04 in) from the impact surface. The 3.30 mm (0.13 in) diameter holes located on either side of the dummy's head are used to ensure that the head is level with respect to the impact surface. The angle between the lower surface plane of the neck transducer mass simulator (drawing 910420–003) and the plane of the impact surface is 45 ±1 degrees.

(ii) For a rear impact test, suspend the head assembly with its midsagittal plane in vertical orientation as shown in Figure R2 of this subpart. The lowest point on the back of the head is 376.0±1.0 mm (14.8 ±0.04 in) from the impact surface. The 3.30 mm (0.13 in) diameter holes located on either side of the dummy's head are used to ensure that the head is level with respect to the impact surface. The angle between the lower surface plane of the neck transducer structural replacement (drawing 910420–003) and the impact surface is 90 ±1 degrees.

(4) Drop the head assembly from the specified height by a means that ensures a smooth, instant release onto a rigidly supported flat horizontal steel plate which is 50.8 mm (2 in) thick and 610 mm (24 in) square. The impact surface shall be clean, dry and have a micro finish of not less than 203.2×10^{-6} mm (8 micro inches) (RMS) and not more than 2032.0×10^{-6} mm (80 micro inches) (RMS).

(5) Allow at least 2 hours between successive tests of the head assembly at the same impact point. For head impacts on the opposite side of the head, the 30-minute waiting period specified in § 572.155(m) does not apply.

§ 572.153 Neck-headform assembly and test procedure.

(a) The neck and headform assembly (refer to §§ 572.150(a)(1)(ii) and 572.150(a)(1)(iii)) for the purposes of this test consists of parts shown in CRABI neck test assembly (drawing TE–3200–100);

(b) When the neck and headform assembly, as defined in § 572.153(a), is tested according to the test procedure in § 572.153(c), it shall have the following characteristics:

(1) Flexion.

(i) Plane D referenced in Figure R3 of this subpart shall rotate in the direction of pre-impact flight with respect to the pendulum's longitudinal centerline not less than 75 degrees and not more than 86 degrees. Within this specified rotation corridor, the peak positive moment about the occipital condyles shall be not less than 36 N-m (26.6 ft-lbf) and not more than 45 N-m (33.2 ft-lbf).

(ii) The positive moment about the occipital condyles shall decay for the first time to 5 N-m (3.7 ft-lbf) between 60 ms and 80 ms after time zero.

(iii) The moment about the occipital condyles shall be calculated by the following formula: Moment (N-m) = My − (0.005842m) × (Fx), where My is the moment about the y-axis, Fx is the shear force measured by the neck transducer (drawing SA572 –S23) and 0.005842m is the distance from the point at which the load cell measures the force to the occipital condyle.

(2) Extension.

(i) Plane D referenced in Figure R4 of this subpart shall rotate in the direction of preimpact flight with respect to the pendulum's longitudinal centerline not less than 80 degrees and not more than 92 degrees. Within the specified rotation corridor, the peak negative moment about the occipital condyles shall be not more than −12 Nm (−8.9 ft-lbf) and not less than −23 N-m (−17.0 ft-lbf) within the minimum and maximum rotation interval.

(ii) The negative moment about the occipital condyles shall decay for the first time to −5 Nm (−3.7 lbf-ft) between 76 ms and 90 ms after time zero.

(iii) The moment about the occipital condyles shall be calculated by the following formula: Moment (N-m) = My − (0.005842m) × (Fx), where My is the moment about the y-axis, Fx is the shear force measured by the neck transducer (drawing SA572 –S23) and 0.005842m is the distance from the point at which the load cell measures the force to the occipital condyle.

(c) Test procedure.

(1) Soak the neck assembly in a controlled environment at any temperature between 20.6 and 22.2 °C (69 and 72 °F) and at any relative humidity between 10 and 70 percent for at least four hours prior to a test. These temperature and humidity levels shall be maintained throughout the testing period specified in this section.

(2) Torque the jam nut (drawing 9001336) on the neck cable (drawing ATD–6206) to 0.2 to 0.3 Nm (2–3 in-lbf).

(3) Mount the neck-headform assembly, defined in paragraph (b) of this section, on the pendulum so the midsagittal plane of the headform is vertical and coincides with the plane of motion of the pendulum as shown in Figure R3 for flexion and Figure R4 for extension tests.

(i) The moment and rotation data channels are defined to be zero when the longitudinal centerline of the neck and pendulum are parallel.

(ii) The test shall be conducted without inducing any torsion of the neck.

(4) Release the pendulum and allow it to fall freely to achieve an impact velocity of 5.2 ±0.1 m/s (17.1 ±0.3 ft/s) for flexion and 2.5 ±0.1 m/s (8.2 ±0.3 ft/s) for extension measured at the center of the pendulum accelerometer at the instant of contact with the honeycomb.

(i) Time-zero is defined as the time of initial contact between the pendulum striker plate and the honeycomb material. The pendulum data channel shall be defined to be zero at this time.

(ii) Stop the pendulum from the initial velocity with an acceleration vs. time pulse which meets the velocity change as specified in the following table. Integrate the pendulum acceleration data channel to obtain the velocity vs. time curve as indicated in Table B:

TABLE B.—PENDULUM PULSE

Time	Flexion		Time	Extension	
m/s	m/s	ft/s	ms	m/s	ft/s
10	1.6–2.3	5.2–7.5	6	0.8–1.2	2.6–3.9
20	3.4–4.2	11.2–13.8	10	1.5–2.1	4.9–6.9
25	4.3–5.2	14.1–17.1	14	2.2–2.9	7.2–9.5

§ 572.154 Thorax assembly and test procedure.

(a) Thorax Assembly (refer to § 572.150(a)(1)(iv)) . The thorax consists of the part of the torso assembly shown in drawing 921022–060.

(b) When the thorax of a completely assembled dummy (drawing 921022–000) is impacted by a test probe conforming to § 572.155(a) at 5.0 ±0.1m/s (16.5 ±0.3 ft/s) according to the test procedure in paragraph (c) of this section, the peak force, measured by the impact probe in accordance with paragraph § 572.155(a), shall be not less than 1514 N (340.7 lbf) and not more than 1796 N (404.1 lbf).

(c) Test procedure.

(1) Soak the dummy in a controlled environment at any temperature between 20.6 and 22.2 °C (69 and 72 °F) and at any relative humidity between 10 and 70 percent for at least four hours prior to a test. These temperature and humidity levels shall be maintained throughout the entire testing period specified in this section.

(2) The test dummy is clothed in a cotton-polyester based tight fitting sweat shirt with long sleeves and ankle long pants whose combined weight is not more than 0.25 kg (.55 lbs).

(3) Seat and orient the dummy on a level seating surface without back support as shown in Figure R5 of this subpart, with the lower limbs extended forward, parallel to the midsagittal plane and the arms 0 to 5 degrees forward of vertical. The dummy's midsagittal plane is vertical within ±/1 degree and the posterior surface of the upper spine box is aligned at 90±/1 degrees from the horizontal. (Shim material may be used under the upper legs to maintain the dummy's specified spine box surface alignment).

(4) Establish the impact point at the chest midsagittal plane so that the impact point of the longitudinal centerline of the probe coincides with the dummy's midsagittal plane, is centered on the torso 196 ±/2.5 mm (7.7 ±/0.1 in) vertically from the plane of the seating surface, and is within 0.5 degrees of a horizontal plane.

(5) Impact the thorax with the test probe so that at the moment of contact the probe's longitudinal center line falls within 2 degrees of a horizontal line in the dummy's midsagittal plane.

(6) Guide the test probe during impact so that there is no significant lateral, vertical or rotational movement.

§ 572.155 Test conditions and instrumentation.

(a) The test probe for thoracic impacts shall be of rigid metallic construction, concentric in shape, and symmetric about its longitudinal axis. It shall have a mass of 2.86±0.02 kg (6.3±0.05 lbs) and a minimum mass moment of inertia of 622 kg-cm^2 (0.55 lbs-in-sec^2) in yaw and pitch about the CG. Up to 1/3 of the weight of the suspension cables and their attachments to the impact probe may be included in the calculation of mass, but such components may not exceed five percent of the total weight of the test probe. The impacting end of the probe, perpendicular to and concentric with the longitudinal axis, must be at least 12.7 mm (0.5 in) thick, and have a flat, continuous, and non-deformable 101.6 ± 0.25 mm (4.00±0.01 in) diameter face with an edge radius of 12.7±0.25 mm (0.5±0.01 in). The probe's end opposite to the impact face must have provisions for mounting of an accelerometer with its sensitive axis collinear with the longitudinal axis of the probe. No concentric portions of the impact probe may exceed the diameter of the impact face. The impact probe shall have a free air resonant frequency of not less than 1000 Hz.

(b) Head accelerometers shall have the dimensions, response characteristics, and sensitive mass locations specified in drawing SA572–S4 and be mounted in the head as shown in drawing 921022–000.

(c) The neck force-moment transducer shall have the dimensions, response characteristics, and sensitive axis locations specified in drawing SA572–S23 and shall be mounted for testing as shown in drawing 921022–000 and in figures R3 and R4 of this subpart.

(d) The shoulder force transducers shall have the dimensions and response characteristics specified in drawing SA572–S25 and are allowed to be mounted as optional instrumentation in place of part No. 921022–022 in the torso assembly as shown in drawing 921022–000.

(e) The thorax accelerometers shall have the dimensions, response characteristics, and sensitive mass locations specified in drawing SA572–S4 and be mounted in the torso

assembly in triaxial configuration as shown in drawing 921022–000.

(f) The lumbar spine and lower neck force/moment transducer shall have the dimensions and response characteristics specified in drawing SA572–S23 and are allowed to be mounted as optional instrumentation in the torso assembly in place of part No. 910420–003 as shown in drawing 921022–000.

(g) The pelvis accelerometers shall have the dimensions, response characteristics, and sensitive mass locations specified in drawing SA572–S4 and are allowed to be mounted as optional instrumentation in the pelvis in triaxial configuration as shown in drawing 921022–000.

(h) The pubic force transducer shall have the dimensions and response characteristics specified in drawing SA572–S24 and is allowed to be mounted as optional instrumentation in place of part No. 921022–050 in the torso assembly as shown in drawing 921022–000.

(i) The outputs of acceleration and force-sensing devices installed in the dummy and in the test apparatus specified by this part are recorded in individual data channels that conform to the requirements of SAE Recommended Practice J211/1, Rev. Mar95 ''Instrumentation for Impact Tests—Part 1—Electronic Instrumentation'' (refer to § 572.150(a)(3)), with channel classes as follows:

(1) Head and headform acceleration—Class 1000.

(2) Neck :

(i) Forces—Class 1000;

(ii) Moments—Class 600;

(iii) Pendulum acceleration—Class 180;

(3) Thorax:

(i) Spine and pendulum accelerations—Class 180;

(ii) Shoulder forces—Class 600;

(4) Lumbar:

(i) Forces—Class 1000;

(ii) Moments —Class 600;

(5) Pelvis:

(i) Accelerations—Class 1000;

(ii) Pubic—Class 1000.

(j) Coordinate signs for instrumentation polarity shall conform to SAE J1733, 1994–12, ''Sign Convention For Vehicle Crash Testing, Surface Vehicle Information Report,'' (refer to § 572.150(a)(4)).

(k) The mountings for sensing devices shall have no resonance frequency within a range of 3 times the frequency range of the applicable channel class.

(l) Limb joints shall be set at l g, barely restraining the weight of the limb when it is extended horizontally. The force required to move a limb segment shall not exceed 2 g throughout the range of limb motion.

(m) Performance tests of the same component, segment, assembly, or fully assembled dummy shall be separated in time by period of not less than 30 minutes unless otherwise noted.

(n) Surfaces of dummy components may not be painted except as specified in this subpart or in drawings referenced in § 572.150.

BILLING CODE 4910–59–P

Figure R 1

FRONTAL HEAD DROP TEST SET-UP SPECIFICATIONS

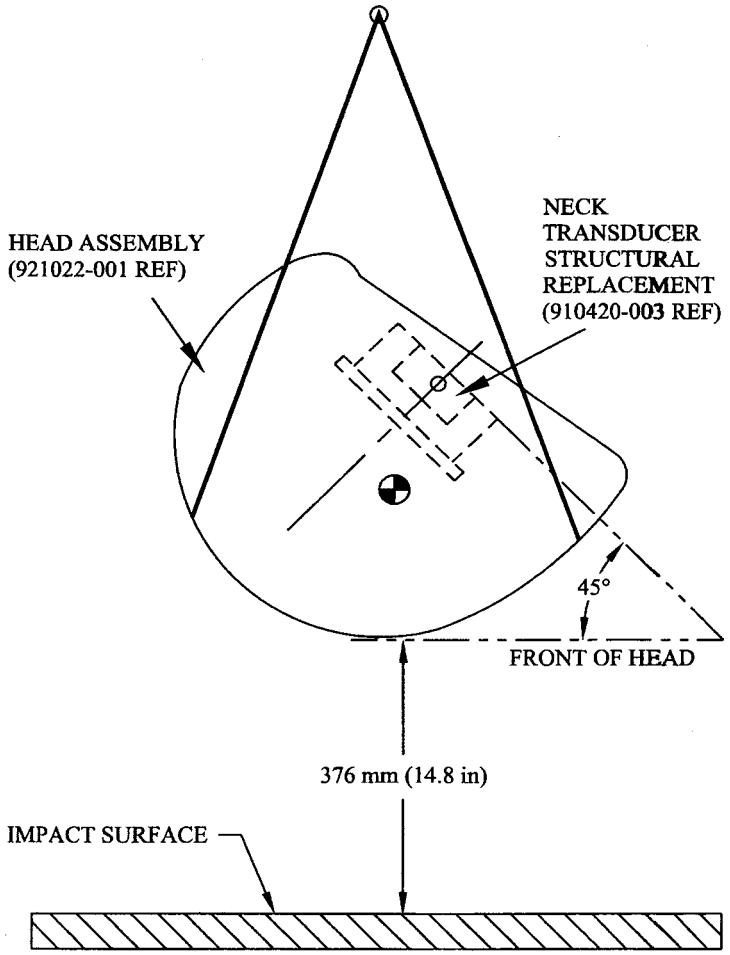

Figure R 2
REAR HEAD DROP TEST SET-UP SPECIFICATIONS

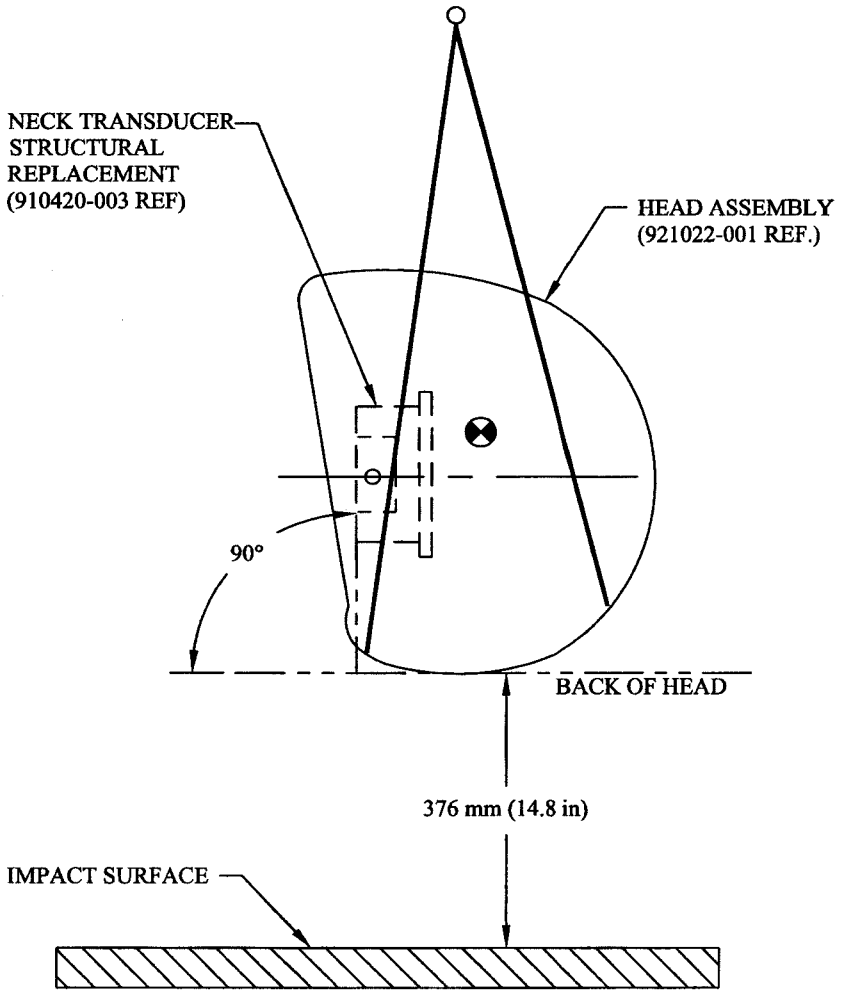

Figure R3

NECK FLEXION TEST SET-UP SPECIFICATIONS

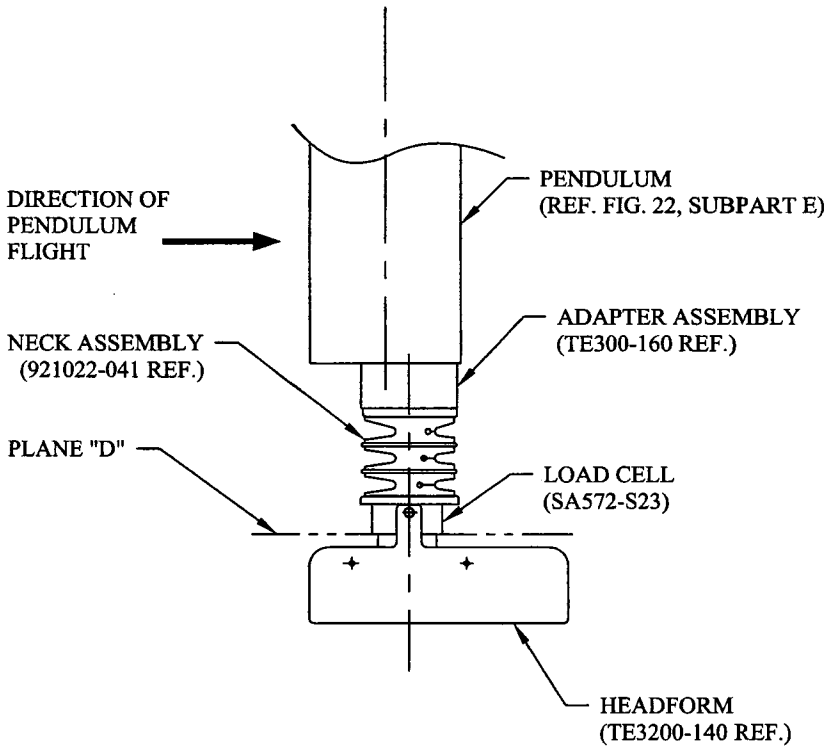

NOTE: MOUNT NECK AT LEADING EDGE OF PENDULUM TO AVOID INTERFERENCE.

Figure R4

NECK EXTENSION TEST SET-UP SPECIFICATIONS

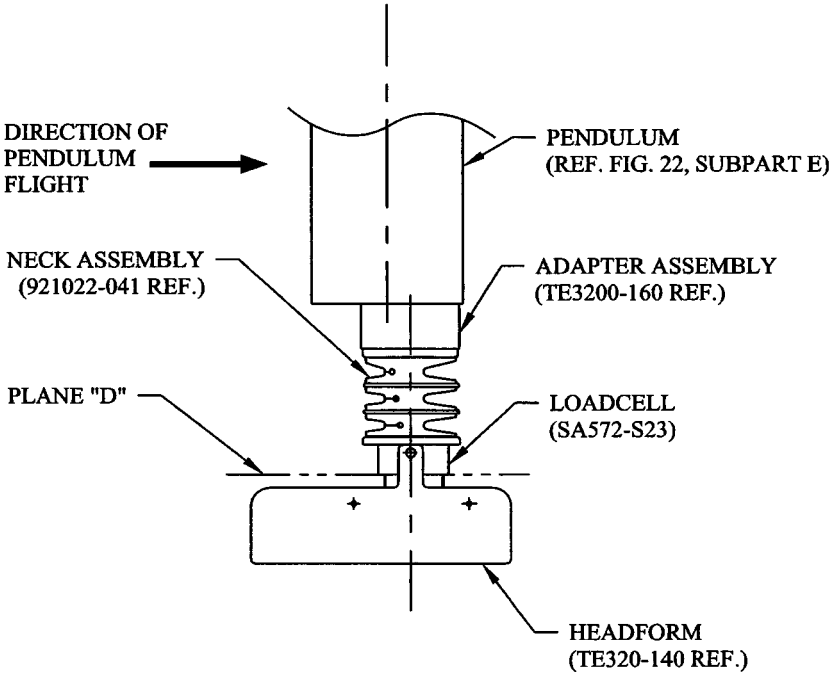

NOTE: MOUNT NECK AT LEADING EDGE OF PENDULUM TO AVOID INTERFERENCE.

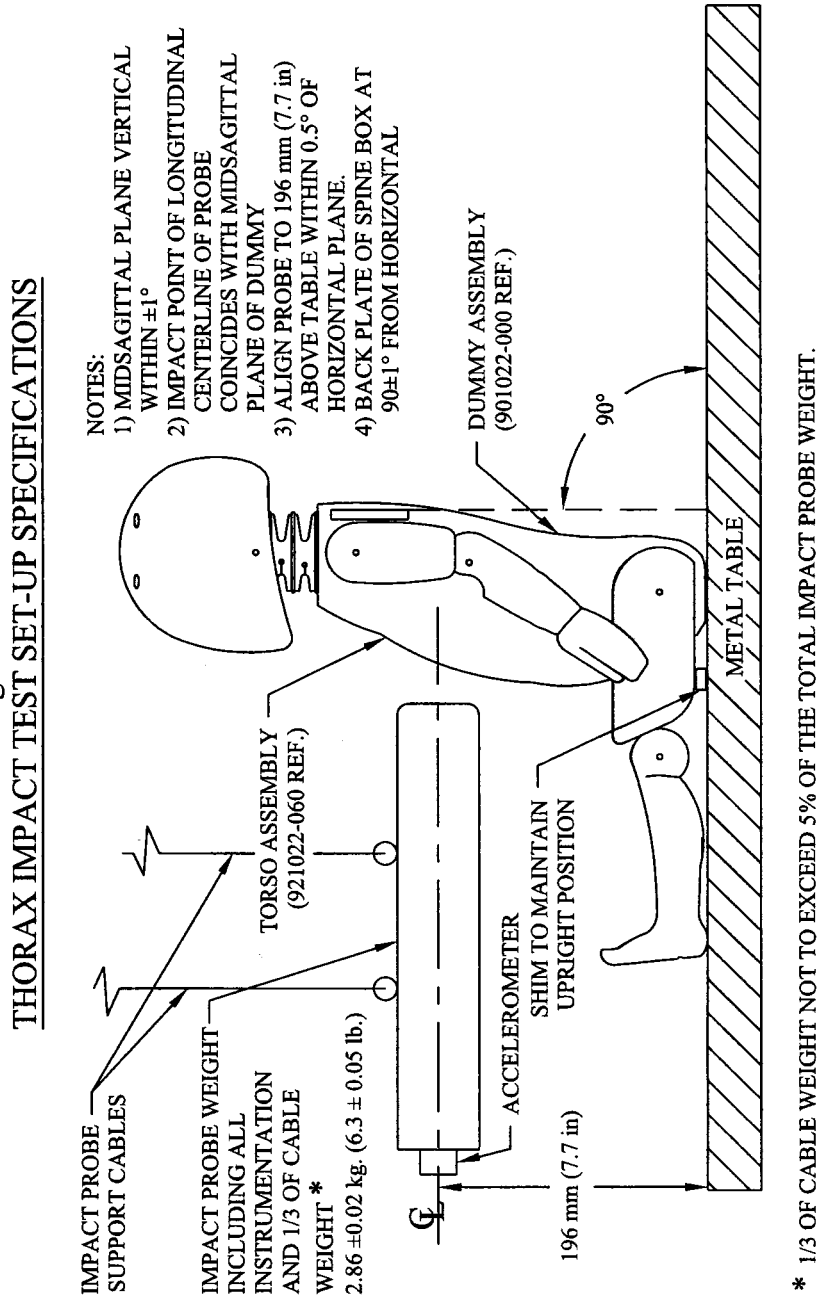

BILLING CODE 4910–59–C

Issued: March 27, 2000.

Rosalyn G. Millman,

Acting Administrator.

[FR Doc. 00–7955 Filed 3–30–00; 8:45 am]

BILLING CODE 4910–59–P

DEPARTMENT OF TRANSPORTATION

National Highway Traffic Safety Administration

49 CFR Part 587

[Docket No. NHTSA–2000–7142]

RIN 2127–AH93

Offset Deformable Barrier

AGENCY: National Highway Traffic Safety Administration (NHTSA), Department of Transportation.

ACTION: Final rule.

SUMMARY: This document amends 49 CFR Part 587 by adding specifications for an offset deformable barrier. This barrier is used in offset deformable barrier tests to evaluate the crashworthiness of vehicles. In this type of test, one side of a vehicle's front end is crashed into a barrier with a deformable face that absorbs some of the crash energy.

Adding the offset deformable barrier to Part 587 is the first step toward using it to evaluate the crashworthiness of vehicles. The issue of specifying use of the barrier as part of the performance requirements of specific safety standards is being addressed in separate

rulemaking documents, most notably those concerning requirements for advanced air bags.

DATES: *Effective Date:* This regulation becomes effective May 1, 2000. The incorporation by reference of the publications listed in the rule is approved by the Director of the Federal Register as of May 1, 2000.

Petitions: Petitions for reconsideration must be received by May 15, 2000.

ADDRESSES: Petitions for reconsideration should refer to the docket number of this rule and be submitted to: Administrator, National Highway Traffic Safety Administration, 400 Seventh Street, SW, Washington, DC 20590.

FOR FURTHER INFORMATION CONTACT:

For non-legal issues, you may call John Lee, Office of Crashworthiness Standards, at 202–366–2264.

For legal issues, you may call Edward Glancy, Office of the Chief Counsel, at 202–366–2992.

You may send mail to both of these officials at National Highway Traffic Safety Administration, 400 Seventh St., SW., Washington, DC, 20590.

SUPPLEMENTARY INFORMATION:

On September 18, 1998, we published in the **Federal Register** (63 FR 49958) a notice of proposed rulemaking (NPRM) to upgrade Standard No. 208, *Occupant Crash Protection*, to require advanced air bags. As part of that document, we proposed specifications for an offset deformable barrier to be used in offset deformable barrier tests. In this type of test, one side of a vehicle's front end is crashed into a barrier with a deformable face that absorbs some of the crash energy.

On November 5, 1999, we published in the **Federal Register** (64 FR 60556) a supplemental notice of proposed rulemaking (SNPRM) for advanced air bags. In the SNPRM, we updated and refined the amendments under consideration. As to the offset deformable barrier, we stated in the SNPRM that we were not republishing the proposed specifications for the barrier but expected to proceed to a final rule in a separate document. We also stated that we did not expect any significant changes from the NPRM.

As we discussed in the SNPRM, the offset deformable barrier we proposed is already used in various parts of the world in several ways. Europe uses it in 56 km/h (35 mph) offset tests, using belted 50th percentile adult male dummies, pursuant to EU Directive 96/79 EC. It is also used in higher speed offset tests as part of the European and Australian New Car Assessment Programs, and by the Insurance Institute for Highway Safety in this country. Transport Canada uses it in offset tests at impact speeds up to 40 km/h (25 mph), using belted 5th percentile adult female dummies, to evaluate air bag sensor performance and air bag aggressivity.

We received only one comment concerning the proposed specifications for the offset deformable barrier, from DaimlerChrysler. That company identified several errors in the specifications.

In this document, we are adopting as final, with minor modifications, the proposed specifications for the offset deformable barrier. We have corrected the errors identified by DaimlerChrysler and have also made a number of editorial changes for purposes of clarity.

The issue of specifying the use of the offset deformable barrier as part of the performance requirements of specific safety standards is being addressed in separate rulemaking documents, most notably those concerning requirements for advanced air bags. In particular, comments concerning the specific offset deformable barrier tests we proposed as part of the advanced air bag rulemaking, including comments raising issues about the suitability of this barrier for testing heavier light trucks and SUVs, are being addressed as part of the final rule for advanced air bags.

Regulatory Analyses and Notices

Executive Order 12866 and DOT Regulatory Policies and Procedures

Executive Order 12866, ''Regulatory Planning and Review'' (58 FR 51735, October 4, 1993), provides for making determinations whether a regulatory action is ''significant'' and therefore subject to Office of Management and Budget (OMB) review and to the requirements of the Executive Order. The Order defines a ''significant regulatory action'' as one that is likely to result in a rule that may:

(1) Have an annual effect on the economy of $100 million or more or adversely affect in a material way the economy, a sector of the economy, productivity, competition, jobs, the environment, public health or safety, or State, local, or Tribal governments or communities;

(2) Create a serious inconsistency or otherwise interfere with an action taken or planned by another agency;

(3) Materially alter the budgetary impact of entitlements, grants, user fees, or loan programs or the rights and obligations of recipients thereof; or

(4) Raise novel legal or policy issues arising out of legal mandates, the President's priorities, or the principles set forth in the Executive Order.

We have considered the impact of this rulemaking action under Executive Order 12866 and the Department of Transportation's regulatory policies and procedures. This rule is not considered a significant regulatory action under section 3(f) of the Executive Order 12866. Consequently, it was not reviewed by the Office of Management and Budget. This rulemaking document was not reviewed by the Office of Management and Budget under E.O. 12866, ''Regulatory Planning and Review.'' The rulemaking action is also not considered to be significant under the Department's Regulatory Policies and Procedures (44 FR 11034, February 26, 1979).

This document amends 49 CFR Part 587 by adding specifications for an offset deformable barrier that the agency may separately decide to use in the Federal motor vehicle safety standards. This rule indirectly imposes requirements on only those businesses that choose to manufacture or test with the barrier, in that the agency will only use barriers for compliance testing that meet all of the criteria specified in this rule. It may indirectly affect vehicle and air bag manufacturers if it is incorporated by reference into the final rule for advanced air bags.

The cost of the deformable face, which is destroyed with each test, is approximately $1,025.

Because the economic impacts of this rule are so minimal, no further regulatory evaluation is necessary.

Executive Order 13132

We have analyzed this rule in accordance with Executive Order 13132 (''Federalism''). We have determined that this rule does not have sufficient Federalism impacts to warrant the preparation of a federalism assessment.

Executive Order 13045

Executive Order 13045 (62 FR 19885, April 23, 1997) applies to any rule that: (1) Is determined to be ''economically significant'' as defined under E.O. 12866, and (2) concerns an environmental, health or safety risk that NHTSA has reason to believe may have a disproportionate effect on children. If the regulatory action meets both criteria, we must evaluate the environmental health or safety effects of the planned rule on children, and explain why the planned regulation is preferable to other potentially effective and reasonably feasible alternatives considered by us.

This rule is not subject to the Executive Order because it is not economically significant as defined in

E.O. 12866. It also does not involve decisions based on health risks that disproportionately affect children.

Executive Order 12778

Pursuant to Executive Order 12778, ''Civil Justice Reform,'' we have considered whether this rule will have any retroactive effect. This rule does not have any retroactive effect. A petition for reconsideration or other administrative proceeding will not be a prerequisite to an action seeking judicial review of this rule. This rule does not preempt the states from adopting laws or regulations on the same subject, except that it does preempt a state regulation that is in actual conflict with the federal regulation or makes compliance with the Federal regulation impossible or interferes with the implementation of the federal statute.

Regulatory Flexibility Act

Pursuant to the Regulatory Flexibility Act (5 U.S.C. 601 *et seq.*, as amended by the Small Business Regulatory Enforcement Fairness Act (SBREFA) of 1996) whenever an agency is required to publish a notice of rulemaking for any proposed or final rule, it must prepare and make available for public comment a regulatory flexibility analysis that describes the effect of the rule on small entities (*i.e.,* small businesses, small organizations, and small governmental jurisdictions). However, no regulatory flexibility analysis is required if the head of an agency certifies the rule will not have a significant economic impact on a substantial number of small entities. SBREFA amended the Regulatory Flexibility Act to require Federal agencies to provide a statement of the factual basis for certifying that a rule will not have a significant economic impact on a substantial number of small entities.

I have considered the effects of this rulemaking action under the Regulatory Flexibility Act (5 U.S.C. § 601 *et seq.*) and certify that this proposal will not have a significant economic impact on a substantial number of small entities. The rule does not impose or rescind any requirements for anyone. The Regulatory Flexibility Act does not, therefore, require a regulatory flexibility analysis.

National Environmental Policy Act

We have analyzed this amendment for the purposes of the National Environmental Policy Act and determined that it will not have any significant impact on the quality of the human environment.

Paperwork Reduction Act

Under the Paperwork Reduction Act of 1995, a person is not required to respond to a collection of information by a Federal agency unless the collection displays a valid OMB control number. This rule does not propose any new information collection requirements.

National Technology Transfer and Advancement Act

Section 12(d) of the National Technology Transfer and Advancement Act of 1995 (NTTAA), Public Law 104–113, section 12(d) (15 U.S.C. 272) directs us to use voluntary consensus standards in its regulatory activities unless doing so would be inconsistent with applicable law or otherwise impractical. Voluntary consensus standards are technical standards (*e.g.,* materials specifications, test methods, sampling procedures, and business practices) that are developed or adopted by voluntary consensus standards bodies, such as the Society of Automotive Engineers (SAE). The NTTAA directs us to provide Congress, through OMB, explanations when we decide not to use available and applicable voluntary consensus standards.

The following voluntary consensus standard has been used in developing specifications for the barrier:

- SAE Recommended Practice J211/1, Rev. Mar95 ''Instrumentation for Impact Tests.''

Unfunded Mandates Reform Act

Section 202 of the Unfunded Mandates Reform Act of 1995 (UMRA) requires Federal agencies to prepare a written assessment of the costs, benefits and other effects of proposed or final rules that include a Federal mandate likely to result in the expenditure by State, local or tribal governments, in the aggregate, or by the private sector, of more than $100 million in any one year (adjusted for inflation with base year of 1995). Before promulgating a NHTSA rule for which a written statement is needed, section 205 of the UMRA generally requires us to identify and consider a reasonable number of regulatory alternatives and adopt the least costly, most cost-effective or least burdensome alternative that achieves the objectives of the rule. The provisions of section 205 do not apply when they are inconsistent with applicable law. Moreover, section 205 allows us to adopt an alternative other than the least costly, most cost-effective or least burdensome alternative if we publish with the final rule an explanation why that alternative was not adopted.

This rule does not impose any unfunded mandates under the Unfunded Mandates Reform Act of 1995. This rule does not meet the definition of a Federal mandate because it does not impose requirements on anyone. Further, it will not result in costs of $100 million or more to either State, local, or tribal governments, in the aggregate, or to the private sector. Thus, this rule is not subject to the requirements of sections 202 and 205 of the UMRA.

Regulation Identifier Number (RIN)

The Department of Transportation assigns a regulation identifier number (RIN) to each regulatory action listed in the Unified Agenda of Federal Regulations. The Regulatory Information Service Center publishes the Unified Agenda in April and October of each year. You may use the RIN contained in the heading at the beginning of this document to find this action in the Unified Agenda.

List of Subjects in 49 CFR Part 587

Incorporation by reference, Motor vehicle safety.

In consideration of the foregoing, NHTSA amends 49 CFR Part 587 as follows:

PART 587—DEFORMABLE BARRIERS

1. The authority citation for part 587 is revised to read as follows:

Authority: 49 U.S.C. 322, 30111, 30115, 30117, and 30166; delegation of authority at 49 CFR 1.50.

2. The heading of part 587 is revised to read as set forth above.

3. The heading ''Subpart A—General'' is added immediately before § 587.1.

4. Section 587.1 is revised to read as follows:

§ 587.1 Scope.

This part describes deformable impact barriers that are to be used for testing compliance of motor vehicles with motor vehicle safety standards.

5. Section 587.3 is revised to read as follows:

§ 587.3 Application.

This part does not in itself impose duties or liabilities on any person. It is a description of tools that are used in compliance tests to measure the performance of occupant protection systems required by the safety standards that refer to these tools. It is designed to be referenced by, and become part of, the test procedures specified in motor vehicle safety standards such as

Standard No. 208, *Occupant Crash Protection,* and Standard No. 214, *Side Impact Protection.*

Subpart B—[Amended]

6. The heading ''Subpart B—Side Impact Moving Deformable Barrier'' is added immediately after the end of § 587.3.

§§ 587.7 through 587.10 [Reserved]

7. Sections 587.7 through 587.10 are reserved.

Subpart C—[Amended]

8. The heading ''Subpart C—Offset Deformable Barrier'' is added immediately after the end of § 587.10.

§ 587.11 [Reserved]

9. Section 587.11 is reserved.

10. Sections 587.12 through 587.19 are added to read as follows:

§ 587.12 Incorporation by reference.

Society of Automotive Engineers (SAE) Recommended Practice J211/1 Rev. MAR 95, Instrumentation for Impact Tests-Part 1—Electronic Instrumentation, is incorporated by reference in § 587.15 in accordance with 5 U.S.C. 552(a) and 1 CFR part 51. A copy may be obtained from SAE at Society of Automotive Engineers, Inc., 400 Commonwealth Drive, Warrendale, PA 15096. A copy of the material may be inspected at NHTSA's Docket Section, 400 Seventh Street, S.W., room 5109, Washington, DC, or at the Office of Federal Register, 800 North Capitol Street, N.W., Suite 700, Washington, DC.

§ 587.13 General description.

The offset deformable barrier is comprised of two elements: a fixed rigid barrier and a deformable face (Figure 1). The fixed rigid barrier is adequate to not deflect or displace more than 10 mm during the vehicle impact. The deformable face consists of aluminum honeycomb and aluminum covering.

§ 587.14 Deformable face component dimensions and material specifications.

The dimensions of the deformable face are illustrated in Figure 1 of this subpart. The dimensions and materials of the individual components are listed separately below. All dimensions allow a tolerance of ± 2.5 mm (0.1 in) unless otherwise specified.

(a) Main honeycomb block.

(1) *Dimensions.* The main honeycomb block has a height of 650 mm (25.6 in) (in the direction of honeycomb ribbon axis), a width of 1,000 mm (39.4 in), and a depth of 450 mm (17.7 in)(in the direction of honeycomb cell axis).

(2) *Material.* The main honeycomb block is constructed of the following material. The honeycomb is manufactured out of aluminum 3003, with a foil thickness of 0.076 mm (0.003 in) ± 0.004 mm (0.002 in) a cell size of 19.14 mm (0.75 in), a density of 28.6 kg/m^3 (1.78 lb/ft^3) ± 2kg/m^3 (0.25 1b/ft^3), and a crush strength of 0.342 MPa (49.6 psi) + 0% − 10%, measured in accordance with the certification procedure described in § 587.15.

(b) Bumper element honeycomb.

(1) *Dimensions.* The bumper element honeycomb has a height of 330 mm (13 in)(in the direction of honeycomb ribbon axis), a width of 1,000 mm (39.4 in), and a depth of 90 mm (3.5 in) (in the direction of honeycomb cell axis).

(2) *Material.* The bumper element honeycomb is constructed of the following material. The honeycomb is manufactured out of aluminum 3003, with a foil thickness of 0.076 mm (0.003 in) ± 0.004 mm (0.0002 in), a cell size of 6.4 mm (0.25 in) ± 1 mm (0.040 in), a density of 82.6 kg/m^3 (5.15 lb/ft^3) ± 3 kg/m^3 (0.19 lb/ft^3), and a crush strength of 1.711 MPa (248 psi) + 0% − 10%, measured in accordance with the certification procedure described in § 587.14.

(c) Backing sheet.

(1) *Dimensions.* The backing sheet has a height of 800 mm (31.5 in), a width of 1,000 mm (39.4 in), and a thickness of 2.0 mm (0.08 in) ± 0.1 mm (0.004 in).

(2) *Material.* The backing sheet is manufactured out of aluminum 5251/5052.

(d) Cladding sheet.

(1) *Dimensions.* The cladding sheet of the main honeycomb block has a total length of 1,700 mm (66.9 in), a width of 1,000 mm (39.4 in), and a thickness of 0.81 mm (0.03 in) ± 0.07 mm (0.003 in). It is shaped as indicated in Figure 1.

(2) *Material.* The cladding sheet of the main honeycomb block is manufactured out of aluminum 5251/5052.

(e) Bumper element honeycomb facing sheet.

(1) *Dimensions.* The bumper facing sheet has a height of 330 mm (13 in), a width of 1,000 mm (39.4 in), and a thickness of 0.81 mm (0.03 in) ± 0.07 mm (0.003 in).

(2) *Material.* The bumper element honeycomb facing sheet is manufactured out of aluminum 5251/5052.

(f) Adhesive. The adhesive used throughout is a two-part polyurethane. (such as Ciba-Geigy XB5090/1 resin with XB5304 hardener, or equivalent).

§ 587.15 Verification of aluminum honeycomb crush strength

The following procedure is used to ascertain the crush strength of the main honeycomb block and the bumper element honeycomb, as specified in §§ 587.14(a)(2) and 587.14(b)(2).

(a) *Sample locations.* To ensure uniformity of crush strength across the whole of the deformable face, 8 samples are taken from 4 locations evenly spaced across the honeycomb material. Seven of these 8 samples must meet the crush strength requirements when tested in accordance with the following sections. The location of the samples depends on the size of the honeycomb material being tested. Four samples, each measuring 300 mm (11.8 in) × 300 mm (11.8 in) × 25 mm (1 in) thick are cut from the honeycomb material. (See Figure 2 for how to locate these samples on two different sizes of honeycomb material.) Each of these larger samples is cut into samples of the size specified in § 587.15(b). Verification is based on the testing of two samples from each of the four locations. The other two samples are retained for future verification, if necessary.

(b) *Sample size.* Samples of the following size are used for testing. The length is 150 mm (5.9 in) ± 6 mm (0.24 in), the width is 150 mm (5.9 in) ± 6 mm (0.24 in), and the thickness is 25 mm (1 in) ± 2 mm (0.08 in). The walls of incomplete cells around the edge of the sample are trimmed as follows (See Figure 3). In the width (''W'') direction, the fringes (''f'') are no greater than 1.8 mm (0.07 in); in the length (''L'') direction, the fringes (''e'') are at least half the length of one bonded cell wall (''d'') (in the ribbon direction).

(c) *Area measurement.* The length of the sample is measured in three locations, 12.7 mm (0.5 in) from each end and in the middle, and recorded as L1, L2, and L3 (Figure 3). In the same manner, the width is measured and recorded as W1, W2, and W3 (Figure 3). These measurements are taken on the centerline of the thickness. The crush area is then calculated as:

$$A = \frac{(L1 + L2 + L3)}{3} X \frac{(W1 + W2 + W3)}{3}$$

(d) *Crush rate and distance.* The sample is crushed at a rate of not less than 5.1 mm/min (0.2 in/ min) and not more than 7.6 mm/min (0.29 in/min). The minimum crush distance is 16.5 mm (0.65 in). Force versus deflection data are collected in either analog or digital form for each sample tested. If analog data are collected, a means of converting the data to digital data must be made available. All digital data are collected at a rate consistent with SAE Recommended Practice J211/1 Rev. MAR 95 (see § 587.12).

(e) *Crush strength determination.* Ignore all data prior to 6.4 mm (0.25 in) of crush and after 16.5 mm (0.65 in) of crush. Divide the remaining data into three sections or displacement intervals (n = 1, 2, 3) (see Figure 4) as follows. Interval one is from 6.4–9.7 mm (0.25–0.38 in) deflection, inclusive. Interval two is from 9.7–13.2 mm (0.38–0.52 in) deflection, exclusive. Interval three is from 13.2–16.5 mm (0.52–0.65 in) deflection, inclusive. Find the average for each section as follows:

$$F(n) = \frac{[F(n)1 + \ldots + F(n)m]}{m}; n = 1,2,3$$

where m represents the number of data points measured in each of the three intervals. Calculate the crush strength of each section as follows:

$$S(n) = \frac{F(n)}{A}; n = 1,2,3$$

(f) *Sample crush strength specification.* For a honeycomb sample to meet crush strength requirements, the following condition must be met. For the 0.342 MPa (49.6 psi) material, the strength must be equal to or greater than 0.308 MPa (45 psi) but less than or equal to 0.342 MPa (49.6 psi) for all three compression intervals. For the 1.711 MPa (248 psi) material the strength must be equal to or greater than 1.540 MPa (223 psi) but less than or equal to 1.711 MPa (248 psi) for all three compression intervals.

(g) *Testing hardware.*

(1) The hardware used to verify crush strength is capable of applying a load of 13.3 kN (3,000 lb), over at least a 16.5 mm (0.65 in) stroke. The crush rate is constant and known. To ensure that the load is applied to the entire sample, the top and bottom crush plates are no smaller than 165 mm by 165 mm (6.5 in × 6.5 in). The engaging surfaces of the crush plates have a roughness approximately equivalent to 60 grit sandpaper. The bottom crush plate is marked to ensure that the applied load is centered on the sample.

(2) The crush plate assemblies have an average angular rigidity (about axes normal to the direction of crush) of at least 1017 Nm/deg (750 ft-lb/deg), over the range of 0 to 203 Nm (0 to 150 ft-lb) applied torque.

§ 587.16 Adhesive bonding procedure.

Immediately before bonding, aluminum sheet surfaces to be bonded are thoroughly cleaned using a suitable solvent, such as 1-1-1 Trichloroethane. This is carried out at least twice and more often if required to eliminate grease or dirt deposits. The cleaned surfaces are abraded using 120 grit abrasive paper. Metallic/silicon carbide abrasive paper is not to be used. The surfaces are thoroughly abraded and the abrasive paper changed regularly during the process to avoid clogging, which could lead to a polishing effect. Following abrading, the surfaces are thoroughly cleaned again, as above. In total, the surfaces are solvent-cleaned at least four times. All dust and deposits left as a result of the abrading process are removed, as these can adversely affect bonding. The adhesive is applied to one surface only, using a ribbed rubber roller. In cases where honeycomb is to be bonded to aluminum sheet, the adhesive is applied to the aluminum sheet only. A maximum pressure of 0.5 kg/m² (11.9 lb/ft²) is applied evenly over the surface, giving a maximum film thickness of 0.5 mm (0.02 in).

§ 587.17 Construction.

(a) The main honeycomb block is bonded to the backing sheet with adhesive such that the cell axes are perpendicular to the sheet. The cladding sheet is adhesively bonded to the front surface of the main honeycomb block. The top and bottom surfaces of the cladding sheet are not bonded to the main honeycomb block but are positioned close to it. The cladding sheet is adhesively bonded to the backing sheet at the mounting flanges. The bumper element honeycomb is adhesively bonded to the front of the cladding sheet such that the cell axes are perpendicular to the sheet. The bottom of the bumper element honeycomb is flush with the bottom surface of the cladding sheet. The bumper facing sheet is adhesively bonded to the front of the bumper element honeycomb.

(b) The bumper element honeycomb is divided into three equal sections by means of two horizontal slots. These slots are cut through the entire depth of the bumper element and extend the whole width of the bumper. The slots are cut using a saw; their width is the width of the blade used which do not exceed 4.0 mm (0.16 in).

(c) Clearance holes for mounting the deformable face are drilled in the cladding sheet mounting flanges (shown in Figure 5). The holes are 20 mm (0.79 in) in diameter. Five holes are drilled in the top flange at a distance of 40 mm (1.57 in) from the top edge of the flange and five holes in the bottom flange at a distance of 40 mm (1.6 in) from the bottom edge of the flange. The holes are spaced at 100 mm (3.9 in), 300 mm (11.8 in), 500 mm (19.7 in), 700 mm (27.5 in), 900 mm (35.4 in) horizontally, from either edge of the barrier. All holes are drilled within ±1 mm (0.04 in) of the nominal distances.

§ 587.18 Dimensions of fixed rigid barrier.

(a) The fixed rigid barrier has a mass of not less than 7×10^4 kg (154,324 lb).

(b) The height of the fixed rigid barrier is at least as high as the highest point on the vehicle at the intersection of the vertical transverse plane tangent to the forwardmost point of both front tires, when the tires are parallel to the longitudinal centerline of the vehicle, and the vertical plane through the longitudinal centerline of the vehicle.

§ 587.19 Mounting.

(a) The deformable face is rigidly attached to the edge of the fixed rigid barrier or to some rigid structure attached thereto. The front of the fixed rigid barrier to which the deformable face is attached is flat (continuous over the height and width of the face and vertical ±1 degree and perpendicular ±1 degree to the axis of the run-up track). The edge of the deformable face is aligned with the edge of the fixed rigid barrier appropriate for the side of the vehicle to be tested.

(b) The deformable face is attached to the fixed rigid barrier by means of ten bolts, five in the top mounting flange and five in the bottom, such that the bottom of the bumper element honeycomb is 200 mm (7.8 in) ±15 mm (0.6 in) from the ground. These bolts are at least 8 mm (0.3 in) in diameter. Steel clamping strips are used for both the top and bottom mounting flanges (Figure 1). These strips are 60 mm (2.4 in) high and 1000 mm (39.4 in) wide and have thickness of at least 3 mm (0.12 in). Five clearance holes of 20 mm (0.8 in) diameter are drilled in both strips to correspond with those in the mounting flange on the deformable face cladding sheet (see § 586.17(c)).

11. The heading ''Figures to Subpart C of 49 CFR Part 587'' is added immediately after the end of § 587.19.

12. Figures 1 through 5 are added at the end of Part 587 to read as follows:

BILLING CODE 4910–59–P

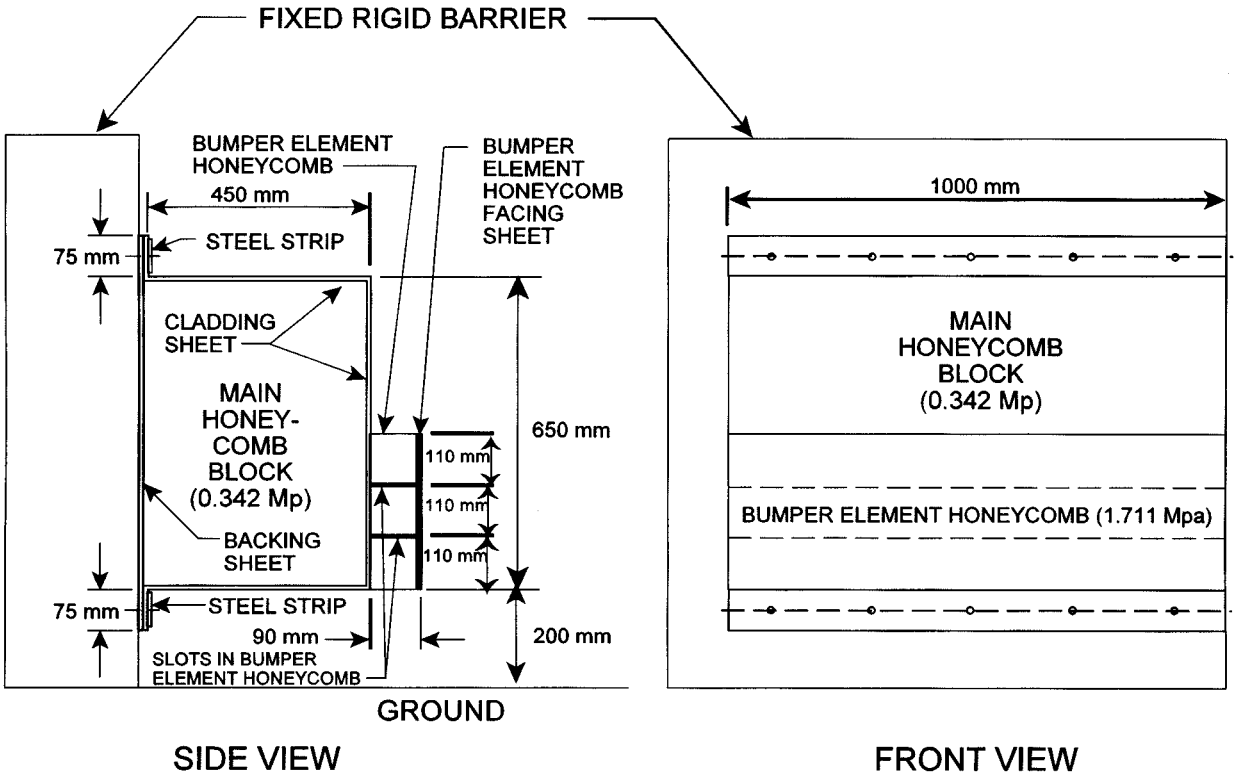

FIGURE 1
OFFSET BARRIER

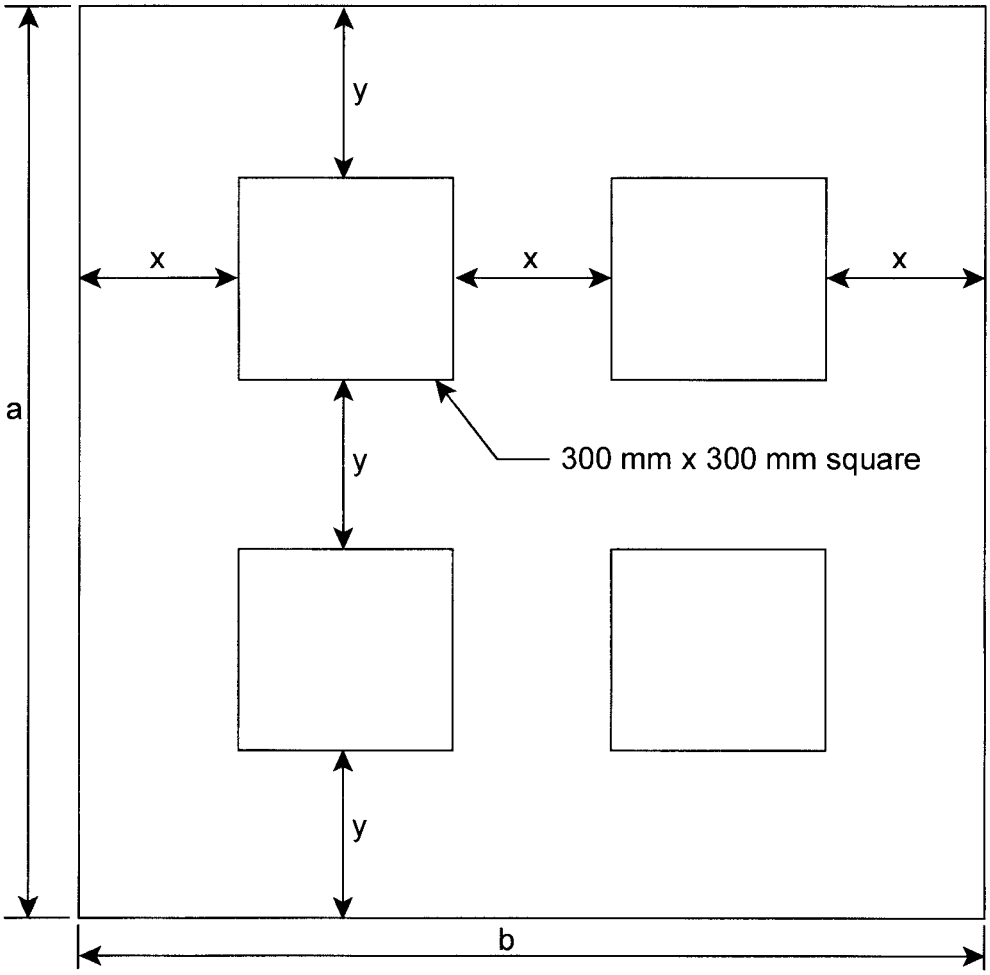

If a ≥ 900 mm: x = 1/3 (b - 600) mm and y = 1/3 (a - 600) mm (for a < b)

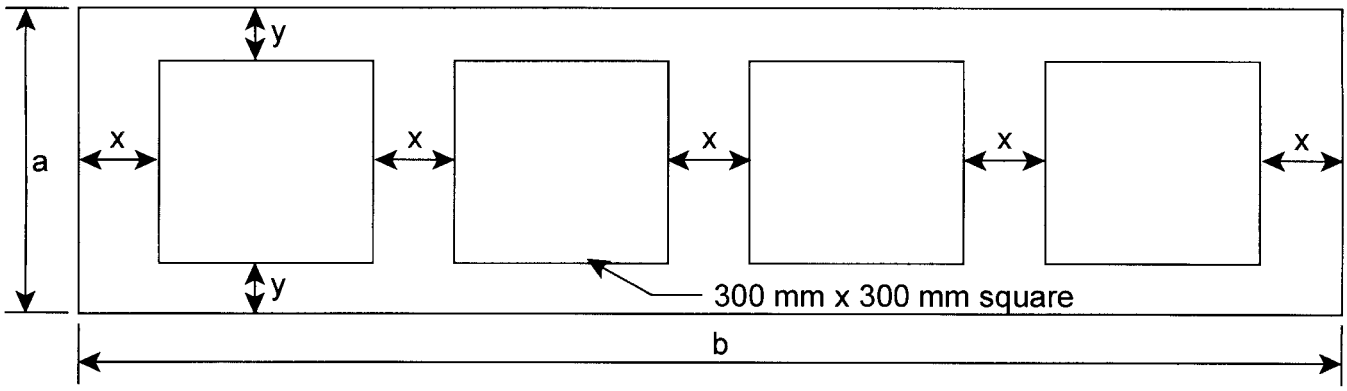

If a < 900 mm: x = 1/5 (b - 1200) mm and y = 1/2 (a - 300) mm (for a ≤ b)

FIGURE 2

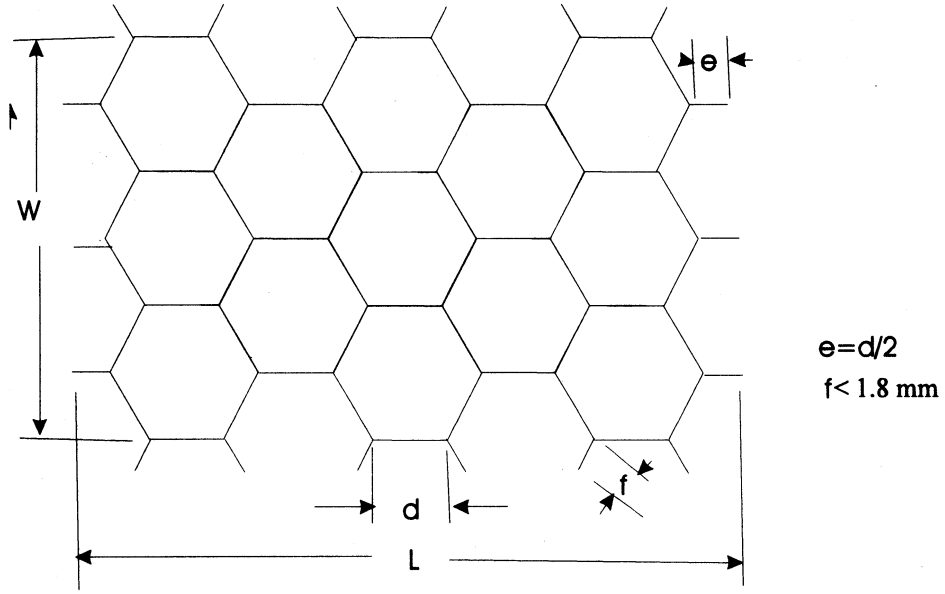

Figure 3
Honeycomb Axes and Measured Dimensions

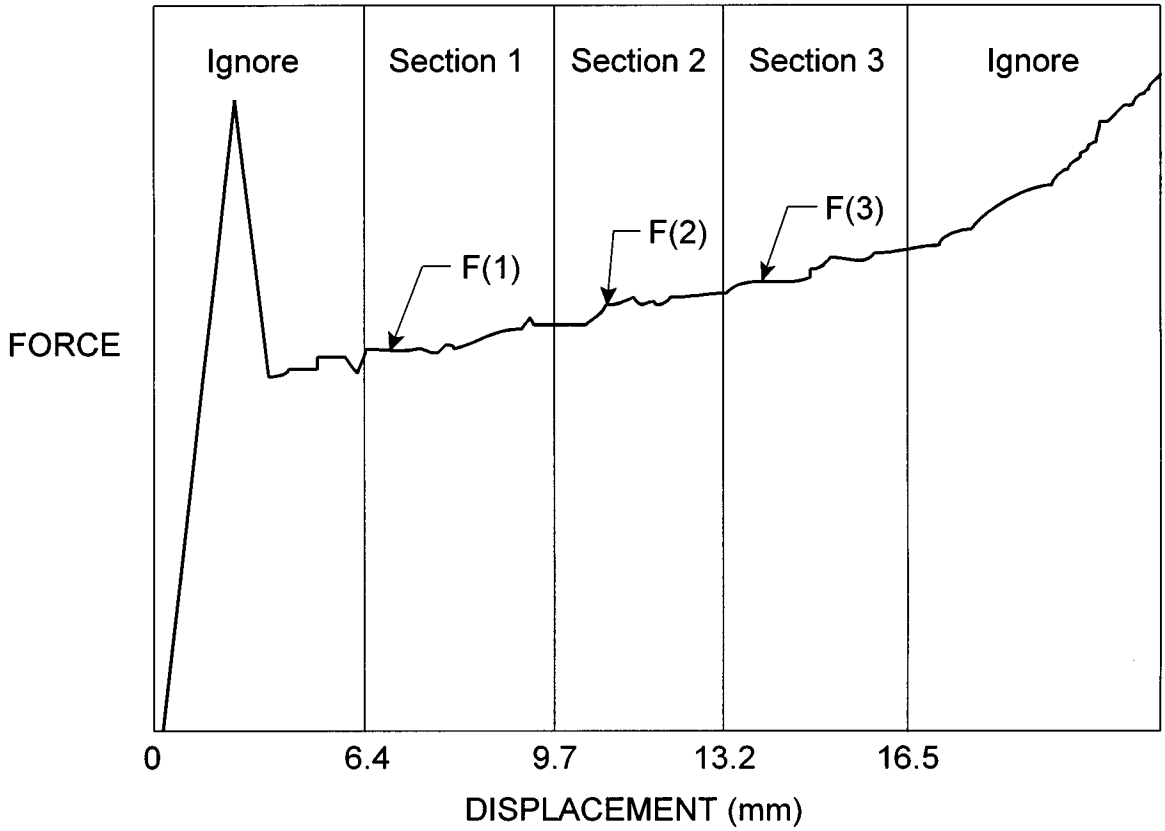

FIGURE 4
CRUSH FORCE AND DISPLACEMENT

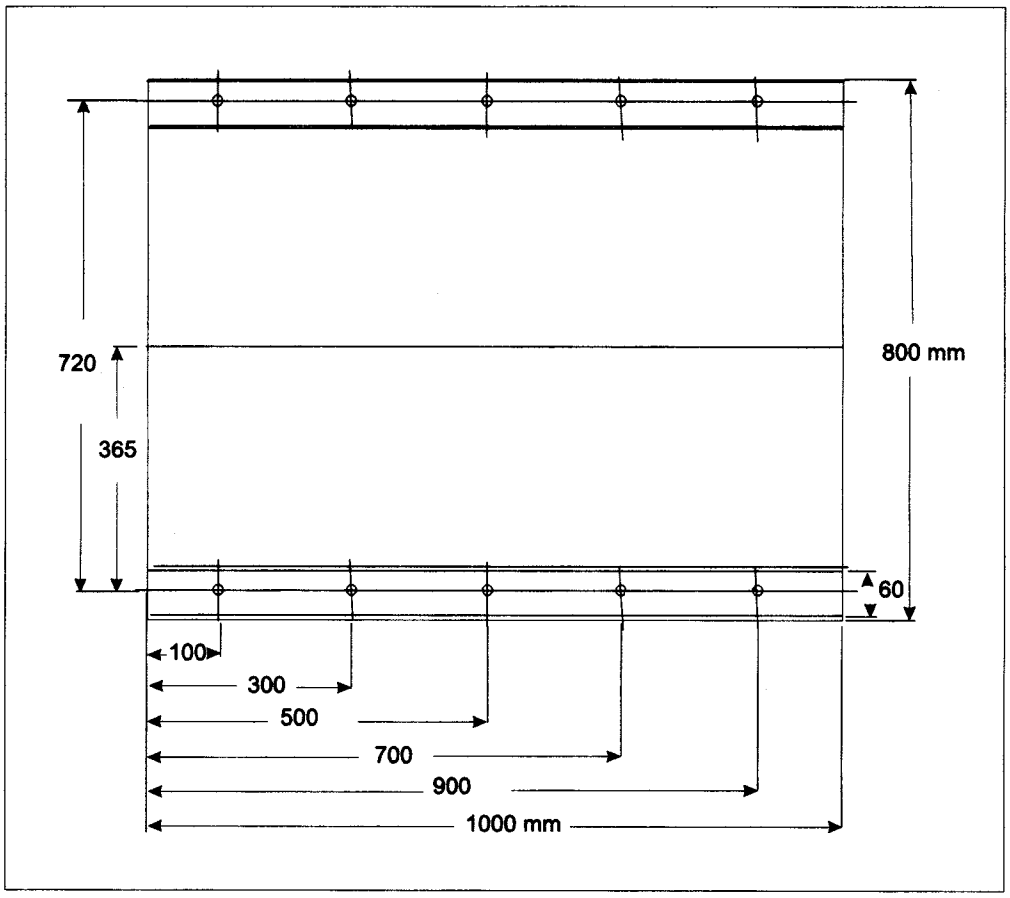

Figure 5
Positions of Holes for Deformable Face Mounting

Issued on: March 28, 2000.

Rosalyn G. Millman,

Acting Administrator.

[FR Doc. 00–8009 Filed 3–30–00; 8:45 am]

BILLING CODE 4910–59–C

DEPARTMENT OF COMMERCE

National Oceanic and Atmospheric Administration

50 CFR Part 679

[Docket No. 991228352–0012–02; I.D. 032700E]

Fisheries of the Exclusive Economic Zone Off Alaska; Opens Directed Fishing for Several Groundfish Species in the Central Regulatory Area in the Gulf of Alaska

AGENCY: National Marine Fisheries Service (NMFS), National Oceanic and Atmospheric Administration (NOAA), Commerce.

ACTION: Modification of a closure.

SUMMARY: NMFS is opening directed fishing for flathead sole, shallow water flatfish, arrowtooth flounder, and deep water flatfish by catcher vessels that are non-exempt under the American Fisheries Act (AFA) in the Central Regulatory Area of the Gulf of Alaska (GOA). This action is necessary to allow non-exempt catcher vessels to participate in these fisheries consistent with regulations implementing the AFA.

DATES: Effective 1200 hrs, Alaska local time (A.l.t.), March 28, 2000.

FOR FURTHER INFORMATION CONTACT: Andrew Smoker, 907–586–7228.

SUPPLEMENTARY INFORMATION: NMFS manages the groundfish fishery in the GOA exclusive economic zone according to the Fishery Management Plan for Groundfish of the Gulf of Alaska (FMP) prepared by the North Pacific Fishery Management Council under authority of the Magnuson-Stevens Fishery Conservation and Management Act. Regulations governing fishing by U.S. vessels in accordance with the FMP appear at subpart H of 50 CFR part 600 and 50 CFR part 679.

The amount of the 2000 GOA AFA catcher vessel sideboards in the Central Regulatory Area was established by the Emergency Interim Rule to Implement Major Provisions of the American Fisheries Act (65 FR 4520, January 28, 2000) in accordance with § 679.20(c)(2)(i) as follows: For flathead sole, 49 metric tons (mt), shallow water flatfish, 544 mt, arrowtooth flounder, 515 mt and deep water flatfish, 168 mt.

The Administrator, Alaska Region, NMFS (Regional Administrator), has established, in accordance with § 679.20(d)(iv), a directed fishing allowance for these fisheries as follows: For flathead sole, 40 mt, shallow water flatfish, 500 mt, arrowtooth flounder, 500 mt and deep water flatfish, 150 mt, and set aside the remaining amounts as bycatch to support other anticipated fishing activity by the non-exempt catcher vessels in the Central Regulatory Area. This area of the GOA was closed to directed fishing for Pacific cod by non-exempt AFA vessels on January 21, 2000 (65 FR 4520, January 28, 2000).

NMFS has determined that as of March 23, 2000, sufficient amounts remain in the directed fishing allowances for these species and species groups in the Central Regulatory Area to sustain a directed fishery. Therefore,

NMFS is terminating the previous closure and is opening directed fishing for flathead sole, shallow water flatfish, arrowtooth flounder, and deep water flatfish by catcher vessels that are non-exempt under the AFA in the Central Regulatory Area of the GOA.

Classification

All other closures remain in full force and effect. This action responds to the best available information recently obtained from the fishery. It must be implemented immediately in order to allow participation of catcher vessels that are non-exempt under the AFA. Providing prior notice and opportunity for public comment for this action is impracticable and contrary to the public interest. NMFS finds for good cause that the implementation of this action cannot be delayed for 30 days. Accordingly, under 5 U.S.C. 553(d), a delay in the effective date is hereby waived.

This action is required by § 679.20 and is exempt from review under E.O. 12866.

Authority: 16 U.S.C. 1801 *et seq.*

Dated: March 28, 2000.

Gary C. Matlock,

Director, Office of Sustainable Fisheries, National Marine Fisheries Service.

[FR Doc. 00–7989 Filed 3–28–00; 3:53 pm]

BILLING CODE 3510–22–F

DEPARTMENT OF COMMERCE

National Oceanic and Atmospheric Administration

50 CFR Part 679

[Docket No. 000211039–0039–01; I.D. 032700B]

Fisheries of the Exclusive Economic Zone Off Alaska; Pollock in the West Yakutat District of the Gulf of Alaska

AGENCY: National Marine Fisheries Service (NMFS), National Oceanic and Atmospheric Administration (NOAA), Commerce.

ACTION: Closure.

SUMMARY: NMFS is prohibiting directed fishing for pollock in the West Yakutat District of the Gulf of Alaska (GOA). This action is necessary to prevent exceeding the pollock total allowable catch (TAC) specified for the West Yakutat District established by the Final 2000 Harvest Specifications for Groundfish.

DATES: Effective 1200 hrs, Alaska local time (A.l.t.), March 28, 2000, until 2400 hrs, A.l.t., December 31, 2000.

FOR FURTHER INFORMATION CONTACT: Mary Furuness, 907–586–7228

SUPPLEMENTARY INFORMATION: NMFS manages the groundfish fishery in the GOA exclusive economic zone according to the Fishery Management Plan for Groundfish of the Gulf of Alaska (FMP) prepared by the North Pacific Fishery Management Council under authority of the Magnuson-Stevens Fishery Conservation and Management Act. Regulations governing fishing by U.S. vessels in accordance with the FMP appear at subpart H of 50 CFR part 600 and 50 CFR part 679.

The pollock TAC in the West Yakutat District was established by the Final 2000 Harvest Specifications for Groundfish (65 FR 8298, February 18, 2000) as 2,340 metric tons (mt), determined in accordance with § 679.20(c)(3)(ii).

In accordance with § 679.20(d)(1)(i), the Administrator, Alaska Region, NMFS (Regional Administrator), has determined that the TAC of pollock in the West Yakutat District will soon be reached. Therefore, the Regional Administrator is establishing a directed fishing allowance of 2,140 mt, and is setting aside the remaining 200 mt as bycatch to support other anticipated groundfish fisheries. In accordance with § 679.20(d)(1)(iii), the Regional Administrator finds that this directed fishing allowance will soon be reached. Consequently, NMFS is prohibiting directed fishing for pollock in the West Yakutat District of the GOA.

Maximum retainable bycatch amounts may be found in the regulations at § 679.20(e) and (f).

Classification

This action responds to the best available information recently obtained from the fishery. It must be implemented immediately to prevent overharvesting the pollock TAC in the West Yakutat District. Providing prior notice and an opportunity for public comment is impracticable and contrary to the public interest. Further delay would only result in overharvest. NMFS finds for good cause that the implementation of this action should not be delayed for 30 days. Accordingly, under 5 U.S.C. 553(d), a delay in the effective date is hereby waived.

This action is required by § 679.20 and is exempt from review under E.O. 12866.

Authority: 16 U.S.C. 1801 *et seq.*

Dated: March 27, 2000.

George H. Darcy,

Acting Director, Office of Sustainable Fisheries, National Marine Fisheries Service.

[FR Doc. 00–7988 Filed 3–28–00; 3:53 pm]

BILLING CODE 3510–22–F

Proposed Rules

Federal Register
Vol. 65, No. 63
Friday, March 31, 2000

This section of the FEDERAL REGISTER contains notices to the public of the proposed issuance of rules and regulations. The purpose of these notices is to give interested persons an opportunity to participate in the rule making prior to the adoption of the final rules.

DEPARTMENT OF AGRICULTURE

Farm Service Agency

7 CFR Part 770

Rural Housing Service

Rural Business-Cooperative Service

Rural Utilities Service

7 CFR Parts 1823 and 1956

[RIN 0560–AF43]

Loans to Indian Tribes and Tribal Corporations

AGENCY: Farm Service Agency, USDA.

ACTION: Proposed rule; extension of comment period.

SUMMARY: The comment period for the proposed rule is being extended in order to provide opportunities to further comment on this rule and its criteria as requested by several parties. This proposed rule was initially published in the **Federal Register** on November 2, 1999, (64 FR 59131). This proposed rule will consolidate into one part and to revise the Indian Tribal Land Acquisition Program (ITLAP) regulations to allow borrowers to use the loan reserve accounts to purchase additional real estate and to give borrowers additional servicing options. The proposed rule also would allow ITLAP funds to be used for certain refinancing activities; limit the requirement for reserve accounts to loans not secured by a general assignment of Tribal income; expand the uses borrowers may make of land purchased with ITLAP funds; require ITLAP loan applications, in most cases, include a copy of the borrower's option to purchase the land; and provide for subsequent loans to be made to ITLAP borrowers.

DATES: Comments on the proposed rule must be received on or before May 1, 2000 to be assured of consideration.

ADDRESSES: Mail comments on the proposed rule to: Arthur Veldon Hall, Director, Farm Loan Programs, Loan Servicing and Property Management Division, Farm Service Agency, USDA, 1400 Independence Avenue, S.W., STOP 0523, Washington, D.C. 20250–0523, fax number: (202) 690–0949, or hand deliver them to room 5449-South at the address listed above during normal business hours.

FOR FURTHER INFORMATION CONTACT: Gary West, Senior Loan Officer, Farm Loan Programs, Loan Servicing and Property Management Division, Farm Service Agency, USDA, 1400 Independence Avenue, S.W., STOP 0523, Washington, D.C. 20250–0523, telephone (202) 690–4008, facsimile (202) 690–0949, electronic mail: gwest@wdc.usda.fsa.gov.

SUPPLEMENTARY INFORMATION

I. Extension of Comment Period

In the **Federal Register** of November 2, 1999, FSA published a proposed rule to enunciate eligibility criteria for debt relief options for ITLAP loans. The comment period closed December 2, 1999, FSA is soliciting comments from interested persons concerning these elements.

FSA received one request from an indebted FSA ITLAP borrower to extend the comment period an additional 30 days. In response to the request, FSA is extending the comment period an additional 30 days.

II. Comments

Interested persons may, on or before May 1, 2000 submit to the Farm Loan Programs, Loan Servicing and Property Management Division (address above) written comments regarding the proposed rule. Two copies of any comments are to be submitted except that individuals may submit one copy. All written comments are available for public inspection from 9 a.m. to 4 p.m., Monday through Friday at the address listed above.

Signed at Washington, D.C., on March 23, 2000.

August Schumacher, Jr.,

Under Secretary for Farm and Foreign Agricultural Services.

[FR Doc. 00–8004 Filed 3–30–00; 8:45 am]

BILLING CODE 3410–05–P

DEPARTMENT OF TRANSPORTATION

Federal Aviation Administration

14 CFR Part 39

[Docket No. 98–NM–380–AD]

RIN 2120–AA64

Airworthiness Directives; Bombardier Model DHC–8–100 and –300 Series Airplanes

AGENCY: Federal Aviation Administration, DOT.

ACTION: Notice of proposed rulemaking (NPRM).

SUMMARY: This document proposes the adoption of a new airworthiness directive (AD) that is applicable to certain Bombardier Model DHC–8–100 and –300 series airplanes. This proposal would require revising the Aircraft Log Book to correct the airplane Production Modification List; performing an inspection to determine which bonded skin panels on the airplane require bonding integrity inspections (BII); and revising the Airworthiness Limitations List of the Approved Maintenance Plan to include the BII requirements. This proposal also would, for certain airplanes, require repetitive ultrasonic bond inspections to detect disbonding of airplane skin panels, and repair, if necessary. This proposal is prompted by issuance of mandatory continuing airworthiness information by a foreign civil airworthiness authority. The actions specified by the proposed AD are intended to prevent damage to bonded skin panels to go undetected, which could result in failure of the bonded skin panels, and consequent loss of controllability of the airplane.

DATES: Comments must be received by May 1, 2000.

ADDRESSES: Submit comments in triplicate to the Federal Aviation Administration (FAA), Transport Airplane Directorate, ANM–114, Attention: Rules Docket No. 98–NM–

380–AD, 1601 Lind Avenue, SW., Renton, Washington 98055–4056. Comments may be inspected at this location between 9:00 a.m. and 3:00 p.m., Monday through Friday, except Federal holidays.

The service information referenced in the proposed rule may be obtained from Bombardier, Inc., Bombardier Regional Aircraft Division, Garratt Boulevard, Downsview, Ontario M3K 1Y5, Canada. This information may be examined at the FAA, Transport Airplane Directorate, 1601 Lind Avenue, SW., Renton, Washington; or at the FAA, Engine and Propeller Directorate, New York Aircraft Certification Office, 10 Fifth Street, Third Floor, Valley Stream, New York.

FOR FURTHER INFORMATION CONTACT: Franco Pieri, Aerospace Engineer, Airframe and Propulsion Branch, ANE–171, FAA, Engine and Propeller Directorate, New York Aircraft Certification Office, 10 Fifth Street, Third Floor, Valley Stream, New York 11581; telephone (516) 256–7526; fax (516) 568–2716.

SUPPLEMENTARY INFORMATION:

Comments Invited

Interested persons are invited to participate in the making of the proposed rule by submitting such written data, views, or arguments as they may desire. Communications shall identify the Rules Docket number and be submitted in triplicate to the address specified above. All communications received on or before the closing date for comments, specified above, will be considered before taking action on the proposed rule. The proposals contained in this notice may be changed in light of the comments received.

Comments are specifically invited on the overall regulatory, economic, environmental, and energy aspects of the proposed rule. All comments submitted will be available, both before and after the closing date for comments, in the Rules Docket for examination by interested persons. A report summarizing each FAA-public contact concerned with the substance of this proposal will be filed in the Rules Docket.

Commenters wishing the FAA to acknowledge receipt of their comments submitted in response to this notice must submit a self-addressed, stamped postcard on which the following statement is made: ''Comments to Docket Number 98–NM–380–AD.'' The postcard will be date stamped and returned to the commenter.

Availability of NPRMs

Any person may obtain a copy of this NPRM by submitting a request to the FAA, Transport Airplane Directorate, ANM–114, Attention: Rules Docket No. 98–NM–380–AD, 1601 Lind Avenue, SW., Renton, Washington 98055–4056.

Discussion

Transport Canada Civil Aviation (TCCA), which is the airworthiness authority for Canada, notified the FAA that an unsafe condition may exist on certain Bombardier Model DHC–8–100 and –300 series airplanes. TCCA advises that, during a Bombardier investigation of an operator query, inconsistencies were found between the effectivity tables for the bonding integrity inspection (BII) in the non-destructive testing manuals and the modification status record in the airplane Modification Log. As a result of these inconsistencies, some of the bonded skin panels on affected DHC–8 aircraft were not being inspected under the BII program even though they were manufactured with panels that require a bonding integrity inspection. Failure to conduct these inspections could allow damage to bonded skin panels to go undetected, which could result in failure of the bonded skin panels, and consequent loss of controllability of the airplane.

Explanation of Relevant Service Information

Bombardier has issued Service Bulletin S.B. 8–51–2, Revision 'A,' dated September 19, 1998, which describes procedures for revising the Aircraft Log Book to correct the airplane Production Modification List; performing an inspection to determine which bonded skin panels on the airplane require the BII program; and revising the Airworthiness Limitations List of the Approved Maintenance Plan to include the BII requirements.

Bombardier also has issued Part 5, sections 55–00–01 and 57–30–01 of Bombardier Production Support Manual (PSM) 1–8–7A, dated December 15, 1998 (for Model DHC–8–100 series airplanes); and Part 5, sections 55–00–01 and 57–30–01 of Bombardier PSM 1–83–7A, dated April 30, 1999 (for Model DHC–8–300 series airplanes) which describe procedures for repetitive ultrasonic bond inspections to detect disbonding of the affected airplane skin panels and repair, if necessary.

Accomplishment of the actions specified in the service bulletin and service information is intended to adequately address the identified unsafe condition. TCCA classified this service bulletin and service information as mandatory and issued Canadian airworthiness directive CF–98–31, dated September 1, 1998, in order to assure the continued airworthiness of these airplanes in Canada.

FAA's Conclusions

These airplane models are manufactured in Canada and are type certificated for operation in the United States under the provisions of § 21.29 of the Federal Aviation Regulations (14 CFR 21.29) and the applicable bilateral airworthiness agreement. Pursuant to this bilateral airworthiness agreement, TCCA has kept the FAA informed of the situation described above. The FAA has examined the findings of TCCA, reviewed all available information, and determined that AD action is necessary for products of this type design that are certificated for operation in the United States.

Explanation of Requirements of Proposed Rule

Since an unsafe condition has been identified that is likely to exist or develop on other airplanes of the same type design registered in the United States, the proposed AD would require accomplishment of the actions specified in the service information described previously, except as discussed below.

Differences Between Proposed Rule and Service Information

Operators should note that, although the service information specifies that the manufacturer may be contacted for disposition of certain repair conditions, this proposal would require the repair of those conditions to be accomplished in accordance with a method approved by the FAA.

Operators also should note that, although the Canadian airworthiness directive affects Bombardier Model DHC–8–314 series airplanes, Bombardier Model DHC–8–314 series airplanes are not type certificated in the United States. Therefore, the proposed AD does not affect those airplanes.

Cost Impact

The FAA estimates that 41 airplanes of U.S. registry would be affected by this proposed AD, that it would take approximately 1 work hour per airplane to accomplish the proposed revisions to the Aircraft Log Book, Approved Maintenance Plan, and inspection, and that the average labor rate is $60 per work hour. Based on these figures, the cost impact of the actions proposed by this AD on U.S. operators is estimated to be $2,460, or $60 per airplane.

The cost impact figure discussed above is based on assumptions that no operator has yet accomplished any of the proposed requirements of this AD action, and that no operator would accomplish those actions in the future if this AD were not adopted.

Regulatory Impact

The regulations proposed herein would not have substantial direct effects on the States, on the relationship between the national government and the States, or on the distribution of power and responsibilities among the various levels of government.

Therefore, in accordance with Executive Order 12612, it is determined that this proposal would not have sufficient federalism implications to warrant the preparation of a Federalism Assessment.

For the reasons discussed above, I certify that this proposed regulation (1) is not a ''significant regulatory action'' under Executive Order 12866; (2) is not a ''significant rule'' under the DOT Regulatory Policies and Procedures (44 FR 11034, February 26, 1979); and (3) if promulgated, will not have a significant economic impact, positive or negative, on a substantial number of small entities under the criteria of the Regulatory Flexibility Act. A copy of the draft regulatory evaluation prepared for this action is contained in the Rules Docket. A copy of it may be obtained by contacting the Rules Docket at the location provided under the caption **ADDRESSES.**

List of Subjects in 14 CFR Part 39

Air transportation, Aircraft, Aviation safety, Safety.

The Proposed Amendment

Accordingly, pursuant to the authority delegated to me by the Administrator, the Federal Aviation Administration proposes to amend part 39 of the Federal Aviation Regulations (14 CFR part 39) as follows:

PART 39—AIRWORTHINESS DIRECTIVES

1. The authority citation for part 39 continues to read as follows:

Authority: 49 U.S.C. 106(g), 40113, 44701.

§ 39.13 [Amended]

2. Section 39.13 is amended by adding the following new airworthiness directive:

Bombardier Inc. (Formerly de Havilland, Inc.): Docket 98–NM–380–AD.

Applicability: DHC–8–100 and –300 series airplanes, serial numbers 215 through 341 inclusive; certificated in any category.

Note 1: This AD applies to each airplane identified in the preceding applicability provision, regardless of whether it has been modified, altered, or repaired in the area subject to the requirements of this AD. For airplanes that have been modified, altered, or repaired so that the performance of the requirements of this AD is affected, the owner/operator must request approval for an alternative method of compliance in accordance with paragraph (e) of this AD. The request should include an assessment of the effect of the modification, alteration, or repair on the unsafe condition addressed by this AD; and, if the unsafe condition has not been eliminated, the request should include specific proposed actions to address it.

Compliance: Required as indicated, unless accomplished previously.

To prevent damage to bonded skin panels to go undetected, which could result in failure of the bonded skin panels, and consequent loss of controllability of the airplane; accomplish the following:

Revision to Aircraft Log Book and Airworthiness Limitations List

(a) Within 30 days after the effective date of this AD, perform the actions required by paragraphs (a)(1), (a)(2), and (a)(3) of this AD.

(1) Revise the Aircraft Log Book to correct the airplane Production Modification List in accordance with the Accomplishment Instructions in Part A of Section III of Bombardier Service Bulletin S.B. 8–51–2, Revision 'A,' dated September 19, 1998.

(2) Perform an inspection to determine which bonded skin panels on the airplane require bonding integrity inspections (BII) in accordance with the Accomplishment Instructions in Part B of Section III of Bombardier Service Bulletin S.B. 8–51–2, Revision 'A,' dated September 19, 1998.

(3) Revise the Airworthiness Limitations List of the Approved Maintenance Plan by inserting the bonding integrity inspections identified as de Havilland Maintenance Task 5500/01 and de Havilland Maintenance Task 5700/01 into the Airworthiness Limitations List. Except as provided by paragraph (e) of this AD: After the actions specified in paragraph (a)(3) of this AD have been accomplished, no alternative replacement times or structural inspection intervals may be approved for the bonded panels of the empennage and wings specified in de Havilland Maintenance Task 5500/01 and de Havilland Maintenance Task 5700/01.

On-Condition Repetitive Inspections

(b) For airplanes on which the bonded skin panels require BII's, as determined in paragraph (a)(2) of this AD: At the next required maintenance visit, but no later than 12 months after the effective date of this AD, perform an initial ultrasonic bond inspection to detect disbonding of the skin panels, in accordance with Part 5, sections 55–00–01 and/or 57–30–01, of Bombardier Production Support Manual (PSM) 1–8–7A, dated December 15, 1998 (for Model DHC–8–100 series airplanes); or Part 5, sections 55–00–01 and 57–30–01 of Bombardier PSM 1–83–7A, dated April 30, 1999 (for Model DHC–8–300 series airplanes); as applicable. Thereafter, repeat the ultrasonic inspection at the interval specified in the applicable PSM.

On-Condition Repair

(c) Except as provided by paragraph (d) of this AD, if any disbonding is detected during any inspection required by paragraph (b) of this AD, prior to further flight, repair in accordance with Part 5, sections 55–00–01 and 57–30–01 of Bombardier PSM 1–8–7A, dated December 15, 1998 (for Model DHC–8–100 series airplanes); or Part 5, sections 55–00–01 and 57–30–01 of Bombardier PSM 1–83–7A, dated April 30, 1999 (for Model DHC–8–300 series airplanes); as applicable.

(d) If any disbonding is detected during any inspection required by paragraph (b) of this AD; and the applicable service information specifies to contact Bombardier for appropriate action: Prior to further flight, repair in accordance with a method approved by the Manager, New York Aircraft Certification Office (ACO), FAA, Engine and Propeller Directorate. For a repair method to be approved by the Manager, New York ACO, as required by this paragraph, the Manager's approval letter must specifically reference this AD.

Alternative Methods of Compliance

(e) An alternative method of compliance or adjustment of the compliance time that provides an acceptable level of safety may be used if approved by the Manager, New York ACO. Operators shall submit their requests through an appropriate FAA Principal Maintenance Inspector, who may add comments and then send it to the Manager, New York ACO.

Note 2: Information concerning the existence of approved alternative methods of compliance with this AD, if any, may be obtained from the New York ACO.

Special Flight Permits

(f) Special flight permits may be issued in accordance with §§21.197 and 21.199 of the Federal Aviation Regulations (14 CFR 21.197 and 21.199) to operate the airplane to a location where the requirements of this AD can be accomplished.

Note 3: The subject of this AD is addressed in Canadian airworthiness directive.

Issued in Renton, Washington, on March 27, 2000.

Donald L. Riggin,

Acting Manager, Transport Airplane Directorate, Aircraft Certification Service.

[FR Doc. 00–8020 Filed 3–30–00; 8:45 am]

BILLING CODE 4910–13–P

DEPARTMENT OF TRANSPORTATION

Federal Aviation Administration

14 CFR Part 39

[Docket No. 99–NM–26–AD]

RIN 2120–AA64

Airworthiness Directives; Bombardier Model CL–600–1A11 (CL–600) and CL–600–2A12 (CL–601) Series Airplanes

AGENCY: Federal Aviation Administration, DOT.

ACTION: Notice of proposed rulemaking (NPRM).

SUMMARY: This document proposes the adoption of a new airworthiness directive (AD) that is applicable to certain Bombardier Model CL–600–1A11 (CL–600) and CL–600–2A12 (CL–601) series airplanes. This proposal would require modification of the main landing gear (MLG) brake units and inboard MLG wheels; and a revision to the Airplane Flight Manual (AFM) to include the increased cooling times for the modified brakes. This proposal also would allow, for certain cases, removal of the inboard and/or outboard wheel discs by installation of a placard to limit airplane operation on the ground and a revision to the AFM to include information for operating the airplane with the wheel discs removed. This proposal is prompted by issuance of mandatory continuing airworthiness information by a foreign civil airworthiness authority. The actions specified by the proposed AD are intended to prevent water freezing on the brake while the airplane is in flight due to water, slush, or snow from the runway entering into the brake assemblies during takeoff, and consequently, a tire burst during landing of the airplane.

DATES: Comments must be received by May 1, 2000.

ADDRESSES: Submit comments in triplicate to the Federal Aviation Administration (FAA), Transport Airplane Directorate, ANM–114, Attention: Rules Docket No. 99–NM–26–AD, 1601 Lind Avenue, SW., Renton, Washington 98055–4056. Comments may be inspected at this location between 9 a.m. and 3 p.m., Monday through Friday, except Federal holidays.

The service information referenced in the proposed rule may be obtained from Bombardier, Inc., Canadair, Aerospace Group, P.O. Box 6087, Station Centre-ville, Montreal, Quebec H3C 3G9, Canada. This information may be examined at the FAA, Transport Airplane Directorate, 1601 Lind Avenue, SW., Renton, Washington; or at the FAA, Engine and Propeller Directorate, New York Aircraft Certification Office, 10 Fifth Street, Third Floor, Valley Stream, New York.

FOR FURTHER INFORMATION CONTACT: James E. Delisio, Aerospace Engineer, Airframe and Propulsion Branch, ANE–171, FAA, Engine and Propeller Directorate, New York Aircraft Certification Office, 10 Fifth Street, Third Floor, Valley Stream, New York 11581; telephone (516) 256–7521; fax (516) 568–2716.

SUPPLEMENTARY INFORMATION:

Comments Invited

Interested persons are invited to participate in the making of the proposed rule by submitting such written data, views, or arguments as they may desire. Communications shall identify the Rules Docket number and be submitted in triplicate to the address specified above. All communications received on or before the closing date for comments, specified above, will be considered before taking action on the proposed rule. The proposals contained in this notice may be changed in light of the comments received.

Comments are specifically invited on the overall regulatory, economic, environmental, and energy aspects of the proposed rule. All comments submitted will be available, both before and after the closing date for comments, in the Rules Docket for examination by interested persons. A report summarizing each FAA-public contact concerned with the substance of this proposal will be filed in the Rules Docket.

Commenters wishing the FAA to acknowledge receipt of their comments submitted in response to this notice must submit a self-addressed, stamped postcard on which the following statement is made: ''Comments to Docket Number 99–NM–26–AD.'' The postcard will be date stamped and returned to the commenter.

Availability of NPRMs

Any person may obtain a copy of this NPRM by submitting a request to the FAA, Transport Airplane Directorate, ANM–114, Attention: Rules Docket No. 99–NM–26–AD, 1601 Lind Avenue, SW., Renton, Washington 98055–4056.

Discussion

Transport Canada Civil Aviation (TCCA), which is the airworthiness authority for Canada, notified the FAA that an unsafe condition may exist on certain Bombardier Model CL–600–1A11 (CL–600) and CL–600–2A12 (CL–601) series airplanes. TCCA advises that a tire burst occurred on a number of airplanes during landing. Investigation revealed that the existing design of the main landing gear (MLG) allows water, slush, or snow from the runway to enter into the brake assemblies during takeoff. This condition, if not corrected, could result in the water freezing on the brake while the airplane is in flight, and consequently, a tire burst during landing of the airplane.

Explanation of Relevant Service Information

Bombardier has issued Canadair Challenger Service Bulletins 600–0369, Revision 4, dated June 27, 1984, including Attachment 1, dated December 6, 1983, and Attachment 2, dated January 11, 1984 [for Model CL–600–1A11 (CL–600) series airplanes]; and 601–0024, Revision 3, dated November 27, 1984, including Attachment 1, dated June 21, 1984, Attachment 2, dated December 6, 1983, and Attachment 3, dated January 11, 1984 [for Model CL–600–2A12 (CL–601) series airplanes]. These service bulletins describe procedures for modification of the MLG brake units and inboard MLG wheels; and a revision to the Normal and Limitation Sections of the Airplane Flight Manual (AFM) to include the increased cooling times for the brakes. The modification involves installation of a wheel disc on each inboard MLG wheel; replacement of screws securing the wheel disc on each outboard MLG wheel with longer screws; installation of a water barrier shield and water deflector to each MLG brake unit assembly; removal of balance weights, if fitted, from the main wheel assemblies; and reidentification of brake unit and main wheel assemblies. For certain airplanes, a sealing cap is also installed on each MLG trailing arm aperture.

Bombardier also has issued Canadair Challenger Service Bulletins 600–0662, dated November 30, 1995 [for Model CL–600–1A11 (CL–600) series airplanes]; and 601–0467, dated November 30, 1995 [for Model CL–600–2A12 (CL–601) series airplanes]. These service bulletins describe procedures for removal of the inboard and/or outboard wheel discs by installation of a placard to limit airplane operation on the ground and a revision to the Normal Procedures Section of the AFM to include information for operating the airplane with the wheel discs removed.

Accomplishment of the actions specified in the service bulletins is intended to adequately address the identified unsafe condition. TCCA classified these service bulletins as mandatory and issued Canadian airworthiness directive CF–84–04R2, dated July 24, 1998, in order to assure the continued airworthiness of these airplanes in Canada.

FAA's Conclusions

These airplane models are manufactured in Canada and are type certificated for operation in the United States under the provisions of § 21.29 of the Federal Aviation Regulations (14 CFR 21.29) and the applicable bilateral

airworthiness agreement. Pursuant to this bilateral airworthiness agreement, TCCA has kept the FAA informed of the situation described above. The FAA has examined the findings of TCCA, reviewed all available information, and determined that AD action is necessary for products of this type design that are certificated for operation in the United States.

Explanation of Requirements of Proposed Rule

Since an unsafe condition has been identified that is likely to exist or develop on other airplanes of the same type design registered in the United States, the proposed AD would require accomplishment of the actions specified in the service bulletins described previously.

Cost Impact

The FAA estimates that 131 airplanes of U.S. registry would be affected by this proposed AD.

It would take approximately 33 work hours [for Model CL–600–1A11 (CL–600) series airplanes] or 26 work hours [for Model CL–600–2A12 (CL–601) series airplanes] per airplane to accomplish the proposed modification, at an average labor rate of $60 per work hour. Required parts would cost approximately $2,977 per airplane. Based on these figures, the cost impact of this action proposed by this AD on U.S. operators is estimated to be $649,367 or $4,957 per airplane [for Model CL–600–1A11 (CL–600) series airplanes], and $594,347 or $4,537 per airplane [for Model CL–600–2A12 (CL–601) series airplanes].

It would take approximately 1 work hour per airplane to accomplish the proposed AFM revision, at an average labor rate of $60 per work hour. Based on these figures, the cost impact of the AFM revision proposed by this AD on U.S. operators is estimated to be $7,860, or $60 per airplane.

The cost impact figures discussed above are based on assumptions that no operator has yet accomplished any of the proposed requirements of this AD action, and that no operator would accomplish those actions in the future if this AD were not adopted.

Should an operator elect to accomplish the optional placard installation and AFM revision, it would take approximately 5 work hours per airplane to accomplish these actions, at an average labor rate of $60 per work hour. Required parts would cost approximately $75 per airplane. Based on these figures, the cost impact of these actions is estimated to be $375 per airplane, per modification cycle.

Regulatory Impact

The regulations proposed herein would not have a substantial direct effect on the States, on the relationship between the national Government and the States, or on the distribution of power and responsibilities among the various levels of government. Therefore, it is determined that this proposal would not have federalism implications under Executive Order 13132.

For the reasons discussed above, I certify that this proposed regulation (1) is not a ''significant regulatory action'' under Executive Order 12866; (2) is not a ''significant rule'' under the DOT Regulatory Policies and Procedures (44 FR 11034, February 26, 1979); and (3) if promulgated, will not have a significant economic impact, positive or negative, on a substantial number of small entities under the criteria of the Regulatory Flexibility Act. A copy of the draft regulatory evaluation prepared for this action is contained in the Rules Docket. A copy of it may be obtained by contacting the Rules Docket at the location provided under the caption **ADDRESSES.**

List of Subjects in 14 CFR Part 39

Air transportation, Aircraft, Aviation safety, Safety.

The Proposed Amendment

Accordingly, pursuant to the authority delegated to me by the Administrator, the Federal Aviation Administration proposes to amend part 39 of the Federal Aviation Regulations (14 CFR part 39) as follows:

PART 39—AIRWORTHINESS DIRECTIVES

1. The authority citation for part 39 continues to read as follows:

Authority: 49 U.S.C. 106(g), 40113, 44701.

§ 39.13 [Amended]

2. Section 39.13 is amended by adding the following new airworthiness directive:

Bombardier, Inc. (Formerly Canadair): Docket 99–NM–26–AD.

Applicability: Model CL–600–1A11 (CL–600) series airplanes, serial numbers 1004 through 1066 inclusive and 1068 through 1085 inclusive; and Model CL–600–2A12 (CL–601) series airplanes, serial numbers 3001 through 3050 inclusive; certificated in any category.

Note 1: This AD applies to each airplane identified in the preceding applicability provision, regardless of whether it has been modified, altered, or repaired in the area subject to the requirements of this AD. For airplanes that have been modified, altered, or repaired so that the performance of the requirements of this AD is affected, the owner/operator must request approval for an alternative method of compliance in accordance with paragraph (d) of this AD. The request should include an assessment of the effect of the modification, alteration, or repair on the unsafe condition addressed by this AD; and, if the unsafe condition has not been eliminated, the request should include specific proposed actions to address it.

Compliance: Required as indicated, unless accomplished previously.

To prevent water freezing on the brake while the airplane is in flight due to water, slush, or snow from the runway entering into the brake assemblies during takeoff, and consequently, a tire burst during landing of the airplane, accomplish the following:

Modification and AFM Revision

(a) Except as required by paragraph (b) of this AD, within 300 flight cycles after the effective date of this AD, accomplish the actions required by paragraphs (a)(1) and (a)(2) of this AD in accordance with the Accomplishment Instructions of Canadair Challenger Service Bulletins 600–0369, Revision 4, dated June 27, 1984, including Attachment 1, dated December 6, 1983, and Attachment 2, dated January 11, 1984 [for Model CL–600–1A11 (CL–600) series airplanes]; or 601–0024, Revision 3, dated November 27, 1984, including Attachment 1, dated June 21, 1984, Attachment 2, dated December 6, 1983, and Attachment 3, dated January 11, 1984 [for Model CL–600–2A12 (CL–601) series airplanes]; as applicable.

(1) Modify the main landing gear (MLG) brake units and inboard MLG wheels.

Note 2: Part A of the Accomplishment Instructions of Canadair Challenger Service Bulletin 600–0369, Revision 4, dated June 27, 1984, including Attachment 1, dated December 6, 1983, and Attachment 2, dated January 11, 1984; has been accomplished on airplane serial number 1072 in production.

(2) Revise the Normal Procedures Section of the FAA-approved Airplane Flight Manual (AFM) to include the brake cooling times for the modification specified in paragraph (a)(1) of this AD. This AFM revision may be accomplished by inserting the applicable AFM revision listed in the applicable service bulletin listed in paragraph (a) of this AD. Subsequent AFM revisions may be inserted in the AFM provided that the brake cooling information is identical to the applicable AFM revision listed in the applicable service bulletin listed in paragraph (a) of this AD.

(b) Operation of the airplane from contaminated runways (*i.e.,* wet, snow covered, or slush covered surfaces) is prohibited until the actions required by paragraph (a) of this AD are accomplished.

Optional Placard Installation and AFM Revision

(c) For airplanes that do not operate from a wet runway where the ambient temperature is below 10 degrees Celsius: It is permissible to remove the inboard and/or outboard wheel discs upon accomplishment of the actions specified in paragraphs (c)(1) and (c)(2) of this AD, in accordance with Canadair Challenger Service Bulletins 600–0662, dated November 30, 1995 [for Model CL–600–1A11 (CL–600) series airplanes]; or 601–0467, dated November 30, 1995 [for Model CL–600–2A12 (CL–601) series airplanes]; as applicable. The placard and AFM revision required by paragraphs (c)(1) and (c)(2) of this AD may be removed upon reinstallation of the inboard and outboard wheel discs.

(1) Install a placard on the instrument panel that states the following: ''WHEEL DISCS ARE REMOVED—REFER TO AFM FOR LIMITATIONS''

(2) Revise the Limitations Section of the AFM to include information for operating the airplane with the wheel discs removed. This AFM revision may be accomplished by inserting the applicable AFM revision specified in the applicable service bulletin listed in paragraph (a) of this AD. Subsequent AFM revisions may be inserted in the AFM provided that the information for operating the airplane with the wheel discs removed is identical to the applicable AFM revision specified in the applicable service bulletin listed in paragraph (a) of this AD.

Alternative Methods of Compliance

(d) An alternative method of compliance or adjustment of the compliance time that provides an acceptable level of safety may be used if approved by the Manager, New York Aircraft Certification Office (ACO), FAA, Engine and Propeller Directorate. Operators shall submit their requests through an appropriate FAA Principal Maintenance Inspector, who may add comments and then send it to the Manager, New York ACO.

Note 3: Information concerning the existence of approved alternative methods of compliance with this AD, if any, may be obtained from the New York ACO.

Special Flight Permits

(e) Special flight permits may be issued in accordance with §§21.197 and 21.199 of the Federal Aviation Regulations (14 CFR 21.197 and 21.199) to operate the airplane to a location where the requirements of this AD can be accomplished.

Note 4: The subject of this AD is addressed in Canadian airworthiness directive CF–84–CF–84–04R2, dated July 24, 1998.

Issued in Renton, Washington, on March 24, 2000.

Donald L. Riggin,

Acting Manager Transport Airplane Directorate, Aircraft Certification Service.

[FR Doc. 00–8019 Filed 3–30–00; 8:45 am]

BILLING CODE 4910–13–P

DEPARTMENT OF THE TREASURY

Internal Revenue Service

26 CFR Part 48

[PS–6–95; REG–209753–95]

RIN 1545–AT18

Diesel Fuel Excise Tax; Dye Injection Systems

AGENCY: Internal Revenue Service (IRS), Treasury.

ACTION: Partial withdrawal of notice of proposed rulemaking.

SUMMARY: This document withdraws the notice of proposed rulemaking as it relates to diesel fuel dye injection systems which was published on March 14, 1996. It affects certain enterers, refiners, terminal operators, and throughputters.

FOR FURTHER INFORMATION CONTACT: Frank Boland, (202) 622–3130 (not a toll-free number).

SUPPLEMENTARY INFORMATION:

Background

On March 14, 1996, the IRS issued proposed regulations (PS–6–95; REG–209753–95) relating to diesel fuel dye injection systems and the measurement of taxable fuel (61 FR 10490). The Treasury Department does not have any plans at the present time to issue final regulations relating to dye injection systems.

List of Subjects in 26 CFR Part 48

Excise taxes, Reporting and recordkeeping requirements.

Withdrawal of Notice of Proposed Rulemaking

Accordingly, under the authority of 26 U.S.C. 7805, the notice of proposed rulemaking as it relates to dye injection systems that was published in the **Federal Register** on March 14, 1996 (61 FR 10490) is withdrawn.

Robert E. Wenzel,

Deputy Commissioner of Internal Revenue.

[FR Doc. 00–7352 Filed 3–30–00; 8:45 am]

BILLING CODE 4830–01–U

DEPARTMENT OF THE INTERIOR

Office of Surface Mining Reclamation and Enforcement

30 CFR Part 934

[SPATS No. ND–040–FOR; ND State Program Amendment XXIX]

North Dakota Regulatory Program

AGENCY: Office of Surface Mining Reclamation and Enforcement, Interior.

ACTION: Proposed rule; public comment period and opportunity for public hearing on proposed amendment.

SUMMARY: Office of Surface Mining Reclamation and Enforcement (OSM) is announcing receipt of a proposed amendment to the North Dakota regulatory program (hereinafter, the ''State program'') under the Surface Mining Control and Reclamation Act of 1977 (SMCRA). North Dakota proposes revisions to its revegetation policy document, ''Standards for Evaluation of Revegetation Success and Recommended Procedures for Pre- and Postmining Vegetation Assessments,'' as discussed in **SUPPLEMENTARY INFORMATION**, II. Proposed Amendment. It intends to revise its program to improve operational efficiency.

DATES: We will accept written comments on this amendment until 4:00 p.m., m.s.t. May 1, 2000. If requested, we will hold a public hearing on the amendment on April 25, 2000. We will accept requests to speak until 4:00 p.m., m.s.t. on April 17, 2000.

ADDRESSES: You should mail or hand deliver written comments and requests to speak at the hearing to Guy Padgett at the address listed below.

You may review copies of the North Dakota program, this amendment, a listing of any scheduled public hearings, and all written comments received in response to this document at the addresses listed below during normal business hours, Monday through Friday, excluding holidays. You may receive one free copy of the amendment by contacting OSM's Casper Field Office.

Guy Padgett, Director, Casper Field Office, Office of Surface Mining Reclamation and Enforcement, 100 East ''B'' Street, Casper, Wyoming 82601–1918

James R. Deutsch, Director, Reclamation Division, Pubic Service Commission, 600 E. Boulevard Avenue, Bismarck, North Dakota 58505–0480, Telephone: 701/328–2400

FOR FURTHER INFORMATION CONTACT: Guy Padgett, Telephone: 307/261–6550. Internet: GPADGETT@OSMRE.GOV

SUPPLEMENTARY INFORMATION:

I. Background on the North Dakota Program
II. Description of the Proposed Amendment
III. Public Comment Procedures
IV. Procedural Determinations

I. Background on the North Dakota Program

North Dakota: On December 15, 1980, the Secretary of the Interior conditionally approved the North Dakota program. You can find background information on the North Dakota program, including the Secretary's findings, the disposition of comments, and conditions of approval of the North Dakota program in the December 15, 1980 **Federal Register** (45 FR 82214). You can also find later actions concerning North Dakota's program and program amendments at 30 CFR 934.15 and 934.16.

II. Description of the Proposed Amendment

By letter dated March 16, 2000, North Dakota sent to us a proposed amendment to its program (Amendment number XXIX), administrative record No. ND–DD–01 under SMCRA (30 U.S.C. 1201 *et seq.*). North Dakota sent the amendment to include changes made at its own initiative. The full text of the program amendment is available for you to read at the locations listed above under **ADDRESSES.**

Specifically, North Dakota proposes to revise its revegetation policy document to reflect changes in its approved State Program as follows: (1) to give mining companies the option of proving reclamation success for three out of five consecutive years, starting no sooner than the eighth year of the responsibility period; (2) that the time-in-place requirement for tree and shrub standards will be deemed satisfied if the mine operator demonstrates that no tree, shrub or half-shrub replanting has occurred during the last six years of the responsibility period; (3) to clarify the objectives section; (4) to add new provisions for adjusting North Dakota Agricultural Statistical Service crop yield to reflect certain management practices; (5) to include other factors, in addition to precipitation and temperature, in developing a cropland and/or tame pastureland regression equation to clinically adjust yield standards; (6) to add a statement to the native grassland section that established plant species must be predominantly native; (7) to provide more consistency for the standards on native grassland diversity and seasonality, (8) to clarify sampling procedures regarding when plant growth forms must be weighed separately; and (9) miscellaneous minor changes and additions.

III. Public Comment Procedures

Under the provisions of 30 CFR 732.17(h), we are requesting your comments on whether the amendment satisfies the applicable program approval criteria of 30 CFR 732.15. If we approve the amendment, it will become part of the North Dakota program.

Written Comments

Send your written comments to OSM at the address given above. We will make comments, including names and addresses of respondents, available for public review during normal business hours. We will not consider anonymous comments. If Individual respondents request confidentiality, we will honor their request to the extent allowable by law. Individual respondents who wish to withhold their name or address from public review, except for the city or town, must state this prominently at the beginning of their comments. We will make all submissions form organizations or businesses, and from individuals identifying themselves as representatives or officials of organizations or businesses, available for public review in their entirety.

Please submit Internet comments as an ASCII file avoiding the use of special characters and any form of encryption. Please also include ''Attn: SPATS No. ND–040–FOR'' and your name and return address in your Internet message. If you do not receive a confirmation that we have received your Internet message, contact the Casper Field Office at 307/261–6555.

Your written comments should be specific and pertain only to the issues proposed in this rulemaking, and include explanations in support of your recommendations. In the final rulemaking, we will not necessarily consider or include in the administrative record any comments received after the time indicated under **DATES** or at locations other than the Casper Field office.

Public Hearing

If you wish to speak at the public hearing, contact the person listed under **FOR FURTHER INFORMATION CONTACT** by 4:00 p.m., m.s.t. on April 17, 2000. If you are disabled and need special accommodations to attend a public hearing, contact the person listed under **FOR FURTHER INFORMATION CONTACT.** We will arrange the location and time of the hearing with those persons requesting the hearing. We will not hold the public hearing if no one requests an opportunity to speak.

To assist the transcriber and ensure an accurate record, we request, if possible, that each person who speaks at a public hearing provide us with a written copy of his or her comments. The public hearing will continue on the specified date until everyone scheduled to speak has been heard. If you are in the audience and have not been scheduled to speak and wish to do so, you will be allowed to speak after those who have been scheduled. We will end the hearing after everyone scheduled to speak and others present in the audience who wish to speak, have been heard.

Public Meeting

If only one person requests an opportunity to speak, we may hold a public meeting rather than a public hearing. If you wish to meet with us to discuss the amendment, please request a meeting by contracting the person listed under **FOR FURTHER INFORMATION CONTACT.** All such meetings are open to the public and, if possible, we will post notices of meetings at the locations listed under **ADDRESSES.** We will make a written summary of each meeting a part of the administrative record.

IV. Procedural Determinations

Executive Order 12866

This rule is exempted from review by the Office of Management and Budget (OMB) under Executive Order 12866 (Regulatory Planning and Review).

Executive Order 12988

The Department of the Interior has conducted the reviews required by section 3 of Executive Order 12988 (Civil Justice Reform) and has determined that this rule meets the applicable standards of subsections (a) and (b) of that section. However, these standards are not applicable to the actual language of State regulatory programs and program amendments since each such program is drafted and promulgated by a specific State, not by OSM. Under sections 503 and 505 of SMCRA (30 U.S.C. 1253 and 1255) and the Federal regulations at 30 CFR 730.11, 732.15, and 732.17(h)(10), decisions on proposed State regulatory programs and program amendments submitted by the States must be based solely on a determination of whether the submittal is consistent with SMCRA and

its implementing Federal regulations and whether the other requirements of 30 CFR Parts 730, 731, and 732 have been met.

National Environmental Policy Act

No environmental impact statement is required for this rule since section 702(d) of SMCRA (30 U.S.C. 1292(d)) provides that agency decisions on proposed State regulatory program provisions do not constitute major Federal actions within the meaning of section 102(2)(C) of the National Environmental Policy Act (42 U.S.C. 4332(2)(C)).

Paperwork Reduction Act

This rule does not contain information collection requirements that require approval by OMB under the Paperwork Reduction Act (44 U.S.C. 3507 *et seq.*).

Regulatory Flexibility Act

The Department of the Interior has determined that this rule will not have a significant economic impact on a substantial number of small entities under the Regulatory Flexibility Act (5 U.S.C. 601 *et seq.*). The State submittal that is the subject of this rule is based upon counterpart Federal regulations for which an economic analysis was prepared and certification made that such regulations would not have a significant economic effect upon a substantial number of small entities. Accordingly, this rule will ensure that existing requirements previously promulgated by OSM will be implemented by the State. In making the determination as to whether this rule would have a significant economic impact, the Department relied upon the data and assumptions for the counterpart Federal regulations.

Unfunded Mandates

This rule will not impose a cost of $100 million or more in any given year on any governmental entity or the private sector.

List of Subjects in 30 CFR Part 934

Intergovernmental relations, Surface mining, Underground mining.

Dated: March 24, 2000.

Brent Wahlquist,

Regional Director, Western Regional Coordinating Center.

[FR Doc. 00–8011 Filed 3–30–00; 8:45 am]

BILLING CODE 4310–05–M

DEPARTMENT OF THE INTERIOR

Office of Surface Mining Reclamation and Enforcement

30 CFR Part 936

[SPATS No. OK–027–FOR]

Oklahoma Regulatory Program

AGENCY: Office of Surface Mining Reclamation and Enforcement (OSM), Interior.

ACTION: Proposed rule; public comment period and opportunity for public hearing.

SUMMARY: OSM is announcing receipt of a proposed amendment to the Oklahoma regulatory program (Oklahoma program) under the Surface Mining Control and Reclamation Act of 1977 (SMCRA). Oklahoma proposes revisions to and/or additions of rules concerning restrictions on the financial interests of State employees, specifically, authority, where to file, what to report, and resolving prohibited interests. Oklahoma intends to revise its program to clarify the responsibilities of the Director of the Oklahoma Department of Mines, advisory board members, commissions, and employees regarding restrictions on the financial interest of State employees.

This document gives the times and locations that the Oklahoma program and the amendment to that program are available for your inspection, the comment period during which you may submit written comments on the amendment, and the procedures that we will follow for the public hearing, if one is requested.

DATES: We will accept written comments until 4:00 p.m., c.d.t., May 1, 2000. If requested, we will hold a public hearing on the amendment on April 25, 2000. We will accept requests to speak at the hearing until 4:00 p.m., c.d.t. on April 17, 2000.

ADDRESSES: You should mail or hand deliver written comments and requests to speak at the hearing to Michael C. Wolfrom, Director, Tulsa Field Office, at the address listed below.

You may review copies of the Oklahoma program, the proposed amendment, a listing of any scheduled public hearings, and all written comments received in response to this document at the addresses listed below during normal business hours, Monday through Friday, excluding holidays. You may receive one free copy of the amendment by contacting OSM's Tulsa Field Office.

Michael C. Wolfrom, Director, Tulsa Field Office, Office of Surface Mining, 5100 East Skelly Drive, Suite 470, Tulsa, Oklahoma 74135–6547, Telephone: (918) 581–6430.

Oklahoma Department of Mines, 4040 N. Lincoln Blvd., Suite 107, Oklahoma City, Oklahoma 73105, Telephone: (405) 521–3859.

FOR FURTHER INFORMATION CONTACT: Michael C. Wolfrom, Director, Tulsa Field Office. Telephone: (918) 581–6430. Internet: mwolfrom@tokgw.osmre.gov.

SUPPLEMENTARY INFORMATION:

I. Background on the Oklahoma Program

On January 19, 1981, the Secretary of the Interior conditionally approved the Oklahoma program. You can find background information on the Oklahoma program, including the Secretary's findings, the disposition of comments, and the conditions of approval in the January 19, 1981, **Federal Register** (46 FR 4902).You can find later actions concerning the Oklahoma program at 30 CFR 936.15 and 936.16.

II. Description of the Proposed Amendment

By letter dated January 13, 2000 (Administrative Record No. OK–985.01), Oklahoma sent us an amendment to its program under SMCRA. Oklahoma sent the amendment in response to our letter dated December 6, 1999 (Administrative Record No. OK–985), that we sent to Oklahoma concerning regulation changes in its program that we did not approve. Oklahoma proposes to amend the Oklahoma Administrative Code (OAC). Below is a summary of the changes proposed by Oklahoma. The full text of the program amendment is available for your inspection at the locations listed above under **ADDRESSES**.

A. Section 460:20–5–3. Authority

Oklahoma proposes to add new paragraph (4) to read as follows:

File all statements and supplements received pursuant to 45 O.S. Supp. 1980, Section 765, from members of advisory boards and the Oklahoma Mining Commission with the Oklahoma Governor's Office, Director of Appointments.

B. Section 460:20–5–9. Where to File

Oklahoma proposes to revise paragraph (a) and to add new paragraphs (b) and (c) to read as follows:

(a) The Director shall file his or her statement with the Director of OSM.

(b) Members of advisory boards and commissions representing multiple interests as provided in Section 460:20–

5–7, shall file their statement with the Governor's Office, Director of Appointments, or such other official as may be designated by State law or regulation.

(c) All other employees shall file his or her statement with the Department of Mines Director pursuant to the requirements of 45 O.S. Supp. 786 and this Subchapter.

C. Section 460:20–5–10. What To Report

Oklahoma proposes to revise paragraph (c)(3) to read as follows:

(3) The exceptions shown in the employee certification of the form must provide enough information for the Director of the Department or the Governor's Office, Director of Appointment, for Commission members, to determine the existence of a direct or indirect financial interest. Accordingly, the exceptions should:

D. Section 460:20–5–12. Resolving Prohibited Interests

Oklahoma proposes to make an editorial correction in the title of this section so that the title reads, ''Resolving prohibited interests,'' instead of ''Resolving prohibited interstate.'' Oklahoma also proposes to revise paragraph (b)(1) so that the second sentence reads:

Violations of the regulations in this subchapter by the Director will be cause for remedial action by the Governor of the State or other appropriate State official based on recommendations from the Director of OSM on behalf of the Secretary.

III. Public Comment Procedures

Under the provisions of 30 CFR 732.17(h), we are seeking comments on whether the proposed amendment satisfies the applicable program approval criteria of 30 CFR 732.15. If we approve the amendment, it will become part of the Oklahoma program.

Written Comments: If you submit written or electronic comments on the proposed rule during the 30-day comment period, they should be specific, should be confined to issues pertinent to the notice, and should explain the reason for your recommendation(s). We may not be able to consider or include in the Administrative Record comments delivered to an address other than the one listed above (see **ADDRESSES**).

Electronic Comments: Please submit Internet comments as an ASCII, WordPerfect, of Word file avoiding the use of special characters and any form of encryption. Please also include ''Attn: SPATS NO. OK–027–FOR'' and your name and return address in your Internet message. If you do not receive a confirmation that we have received your Internet message, contact the Tulsa Field Office at (918) 581–6430.

Availability of Comments: Our practice is to make comments, including names and home addresses of respondents, available for public review during regular business hours at OSM's Tulsa Field Office (see **ADDRESSES**). Individual respondents may request that we withhold their home address from the administrative record, which we will honor to the extent allowable by law. There also may be circumstances in which we would withhold from administrative record a respondent's identity, as allowable by law. If you wish us to withhold your name and/or address, you must state this prominently at the beginning of your comment. However, we will not consider anonymous comments. We will make all submissions from organizations or businesses, and from individuals identifying themselves as representatives or officials of organizations or businesses, available for public inspection in their entirety.

Public Hearing: If you wish to speak at the public hearing, contact the person listed under **FOR FURTHER INFORMATION CONTACT** by 4 p.m., c.d.t. on April 17, 2000. We will arrange the location and time of the hearing with those persons requesting the hearing. If no one requests an opportunity to speak at the public hearing, the hearing will not be held.

To assist the transcriber and ensure an accurate record, we request that you provide us with a written copy of your testimony if you speak at the public hearing. The public hearing will continue on the specified date until all persons scheduled to speak have been heard. If you are in the audience and have not been scheduled to speak and wish to do so, you will be allowed to speak after those who have been scheduled. We will end the hearing after all persons scheduled to speak and persons present in the audience who wish to speak have been heard.

If you are disabled and need a special accommodation to attend a public hearing, contact the person listed under **FOR FURTHER INFORMATION CONTACT**.

Public Meeting: If only one person requests an opportunity to speak at a hearing, a public meeting, rather than a public hearing, may be held. If you wish to meet with us to discuss the proposed amendment, request a meeting by contacting the person listed under **FOR FURTHER INFORMATION CONTACT**. All such meetings are open to the public and, if possible, we will post notices of meetings at the locations listed under **ADDRESSES**. We will also make a written summary of each meeting a part of the Administrative Record.

IV. Procedural Determinations

Executive Order 12866—Regulatory Planning and Review

This rule is exempted from review by the Office of Management and Budget (OMB) under Executive Order 12866.

Executive Order 12630—Takings

This rule does not have takings implications. This determination is based on the analysis performed for the counterpart federal regulation.

Executive Order 13132—Federalism

This rules does not have federalism implications. SMCRA delineates the roles of the federal and state governments with regard to the regulation of surface coal mining and reclamation operations. One of the purposes of SMCRA is to ''establish a nationwide program to protect society and the environment from the adverse effects of surface coal mining operations.'' Section 503(a)(1) of SMCRA requires that state laws regulating surface coal mining and reclamation operations be ''in accordance with'' the requirements of SMCRA, and section 503(a)(7) requires that state programs contain rules and regulations ''consistent with'' regulations issued by the Secretary pursuant to SMCRA.

Executive Order 12988—Civil Justice Reform

The Department of the Interior has conducted the reviews required by section 3 of Executive Order 12988 and has determined that, to the extent allowed by law, this rule meets the applicable standards of subsections (a) and (b) of this section. However, these standards are not applicable to the actual language of state regulatory programs and program amendments since each such program is drafted and promulgated by a specific state, not OSM. Under sections 503 and 505 of SMCRA (30 U.S.C. 1253 and 1255) and 30 CFR 730.11, 732.15, and 732.17(h)(10), decisions on proposed state regulatory programs and program amendments submitted by the states must be based solely on a determination of whether the submittal is consistent with SMCRA and its implementing federal regulations and whether the other requirements of 30 CFR Parts 730, 731, and 732 have been met.

National Environmental Policy Act

Section 702(d) of SMCRA (30 U.S.C. 1292(d)) provides that a decision on a proposed state regulatory program

provision does not constitute a major federal action within the meaning of section 102(2)(C) of the National Environmental Policy Act (42 U.S.C. 4332(2)(C)). A determination has been made that such decisions are categorically excluded from the NEPA process (516 DM 8.4.A).

Paperwork Reduction Act

This rule does not contain information collection requirements that require approval by OMB under the Paperwork Reduction Act (44 U.S.C. 3507 *et seq.*).

Regulatory Flexibility Act

The Department of the Interior has determined that this rule will not have a significant economic impact on a substantial number of small entities under the Regulatory Flexibility Act (5 U.S.C. 601 *et seq.*). The State submittal which is the subject of this rule is based upon counterpart federal regulations for which an economic analysis was prepared and certification made that such regulations would not have a significant economic effect upon a substantial number of small entities. Therefore, this rule will ensure that existing requirements previously promulgated by OSM will be implemented by the state. In making the determination as to whether this rule would have a significant economic impact, the Department relied upon the data and assumptions for the counterpart federal regulations.

Small Business Regulatory Enforcement Fairness Act

This rule is not a major rule under 5. U.S.C. 804(2), the Small Business Regulatory Enforcement Fairness Act. This rule:

a. Does not have an annual effect on the economy of $100 million.

b. Will not cause a major increase in costs or prices for consumers, individual industries, federal, state, or local government agencies, or geographic regions.

c. Does not have significant adverse effects on competition, employment, investment, productivity, innovation, or the ability of U.S. based enterprises to compete with foreign-based enterprises.

This determination is based upon the fact that the state submittal which is the subject of this rule is based upon counterpart federal regulations for which an analysis was prepared and a determination made that the federal regulation was not considered a major rule.

Unfunded Mandates

This rule will not impose a cost of $100 million or more in any given year any government entity or the private sector.

List of Subjects in 30 CFR Part 936

Intergovernmental relations, Surface mining, Underground mining.

Dated: March 23, 2000.

Richard J. Seibel,

Acting Regional Director, Mid-Continent Regional Coordinating Center.

[FR Doc. 00–8010 Filed 3–30–00; 8:45 am]

BILLING CODE 4310–05–P

DEPARTMENT OF COMMERCE

Patent and Trademark Office

37 CFR Part 1

[Docket No.: 000308066–0066–01]

RIN 0651–AB06

Changes to Implement Patent Term Adjustment Under Twenty-Year Patent Term

AGENCY: Patent and Trademark Office, Commerce.

ACTION: Notice of proposed rulemaking.

SUMMARY: The United States Patent and Trademark Office (Office) is proposing changes to the rules of practice in patent cases to implement certain provisions of section 4402 of the ''American Inventors Protection Act of 1999.'' These provisions of the ''American Inventors Protection Act of 1999'' provide patent term adjustment to compensate patentees for certain delays in the application examination process.

DATES: *Comment Deadline Date:* To be ensured of consideration, written comments must be received on or before May 30, 2000. No public hearing will be held.

ADDRESSES: Comments should be sent by electronic mail message over the Internet addressed to: patentterm.comments@uspto.gov. Comments may also be submitted by mail addressed to: Box Comments—Patents, Commissioner for Patents, Washington, D.C. 20231, or by facsimile to (703) 872–9411 or (703) 308–6916, marked to the attention of Karin L. Tyson. Although comments may be submitted by mail or facsimile, the Office prefers to receive comments via the Internet. If comments are submitted by mail, the Office would prefer that the comments be submitted on a DOS formatted 3½ inch disk accompanied by a paper copy.

The comments will be available for public inspection at the Special Program Law Office, Office of the Deputy Assistant Commissioner for Patent Policy and Projects, located at Room 3–C23 of Crystal Plaza 4, 2201 South Clark Place, Arlington, Virginia, and will be available through anonymous file transfer protocol (ftp) via the Internet (address: http://www.uspto.gov). Since comments will be made available for public inspection, information that is not desired to be made public, such as an address or phone number, should not be included in the comments.

FOR FURTHER INFORMATION CONTACT: Karin L. Tyson, Robert W. Bahr, or Robert A. Clarke by telephone at (703) 305–1383, or by mail addressed to: Box Comments—Patents, Commissioner for Patents, Washington, D.C. 20231, or by facsimile to (703) 872–9411 or (703) 308–6916, marked to the attention of Karin L. Tyson.

SUPPLEMENTARY INFORMATION: The ''American Inventors Protection Act of 1999'' (Title IV of the ''Intellectual Property and Communications Omnibus Reform Act of 1999'' (S. 1948) as introduced in the 106th Congress on November 17, 1999) was incorporated and enacted into law on November 29, 1999, by § 1000(a)(9), Division B, of Public Law 106–113, 113 Stat. 1501 (1999). The ''American Inventors Protection Act of 1999'' contains a number of changes to title 35, United States Code. This notice proposes changes to the rules of practice to implement the provisions of §§ 4401 and 4402 of the ''American Inventors Protection Act of 1999.'' These provisions are effective on the date that is six months after the date of enactment of the ''American Inventors Protection Act of 1999'' (May 29, 2000) and apply to applications, other than for a design patent, filed on or after the date that is six months after the date of enactment of the ''American Inventors Protection Act of 1999'' (May 29, 2000).

Section 532 of the Uruguay Round Agreements Act (Public Law 103–465, 108 Stat. 4809 (1994)) amended 35 U.S.C. 154 to provide that the term of patent protection begins on the date of patent grant and ends on the date twenty years from the filing date of the application, or the earliest filing date for which a benefit is claimed under 35 U.S.C. 120, 121, or 365(c). Public Law 103–465 also contained provisions, codified at 35 U.S.C. 154(b), for patent term extension due to certain examination delays.

Section 4402 of the ''American Inventors Protection Act of 1999'' amends 35 U.S.C. 154(b)(1) to provide

day-by-day patent term adjustment if the Office fails, within specified time periods, to: (1) initially act on the application; (2) respond to a reply or appeal to the Board of Patent Appeals and Interferences by the applicant; (3) act on an application containing allowed claims after a decision by the Board of Patent Appeals and Interferences or a Federal court; or (4) issue the application after the issue fee is paid in reply to a notice of allowance and all outstanding requirements are satisfied (35 U.S.C. 154(b)(1)(A)). Section 4402 of the ''American Inventors Protection Act of 1999'' also amends 35 U.S.C. 154(b)(1) to provide day-by-day patent term adjustment if, subject to a number of limitations, the Office fails to issue a patent within three years of the actual filing date of the application (35 U.S.C. 154(b)(1)(B)). Finally, § 4402 of the ''American Inventors Protection Act of 1999'' also amends 35 U.S.C. 154(b)(1) to provide day-by-day patent term adjustment for delays due to interference proceedings under 35 U.S.C. 135(a), imposition of a secrecy order under 35 U.S.C. 181, or successful appellate review by the Board of Patent Appeals and Interferences or a Federal court (35 U.S.C. 154(b)(1)(C)).

Section 4402 of the ''American Inventors Protection Act of 1999'' amends 35 U.S.C. 154(b)(2) to place limitations on the period of patent term adjustment granted under 35 U.S.C. 154(b)(1). First: to the extent that the periods of delay attributed to the grounds specified in 35 U.S.C. 154(b)(1) overlap, the period of adjustment shall not exceed the actual number of days the issuance of the patent was delayed. Second: no patent, the term of which has been disclaimed beyond a specified date, may be adjusted under 35 U.S.C. 154(b) beyond the expiration date specified in the disclaimer. Third: the period of patent term adjustment under 35 U.S.C. 154(b)(1) shall be reduced by a period equal to the period of time during which the applicant failed to engage in reasonable efforts to conclude prosecution (or processing or examination) of the application. Section 4402 of the ''American Inventors Protection Act of 1999,'' however, does not contain any limit (*e.g.,* of five or ten years) on the total extension or adjustment that may be granted under 35 U.S.C. 154(b).

An applicant is deemed to have failed to engage in reasonable efforts to conclude prosecution of the application with respect to any patent term adjustment under 35 U.S.C. 154(b)(1)(B) (failure to issue a patent within three years of the actual filing date of the application) for the cumulative total of any periods of time in excess of three months that are taken to reply to a notice of any rejection, objection, argument, or other request, measuring the three-month period from the date the notice was mailed or given. In addition, 35 U.S.C. 154(b)(2) directs the Office to prescribe regulations establishing the circumstances that constitute a failure of the applicant to engage in reasonable efforts to conclude processing or examination of the application.

Section 4402 of the ''American Inventors Protection Act of 1999'' also amends 35 U.S.C. 154(b)(3) to establish procedures for patent term adjustment determinations. 35 U.S.C. 154(b)(3) directs the Office to prescribe regulations establishing procedures for the application for and determination of patent term adjustment under 35 U.S.C. 154(b). 35 U.S.C. 154(b)(3), however, requires the Office to: (1) make a patent term adjustment determination and transmit a notice of that determination with the notice of allowance; and (2) provide the applicant with one opportunity to request reconsideration of that patent term adjustment determination. 35 U.S.C. 154(b)(3) also provides that the Office shall reinstate all or part of the cumulative period of time of an adjustment reduced under 35 U.S.C. 154(b)(2)(C) (for failure to reply to a notice of any rejection, objection, argument, or other request within three months of the date the notice was mailed or given) if, prior to issuance of the patent, the applicant makes a showing that, in spite of all due care, the applicant was unable to reply within the three-month period, except that the Office may not reinstate more than three additional months for each reply beyond the original three-month period. Section 4402 of the ''American Inventors Protection Act of 1999'' also amends 35 U.S.C. 154(b)(3) to provide that the Office shall proceed to grant the patent after completing its patent term adjustment determination, and amends 35 U.S.C. 154(b)(4) to provide for judicial review in the event that the applicant is dissatisfied with that patent term adjustment determination.

Section 4405(a) of the ''American Inventors Protection Act of 1999'' provides that § 4402 shall take effect on the date that is six months after the date of enactment of the ''American Inventors Protection Act of 1999'' (May 29, 2000) and shall apply to any application (other than a reissue or design) filed on or after the date that is six months after the date of enactment of the ''American Inventors Protection Act of 1999'' (May 29, 2000). Therefore, patents (other than reissue or design) issued on applications filed on or after June 8, 1995, but before May 29, 2000, are subject to the patent term extension provisions of 35 U.S.C. 154(b) as amended by § 532(a)(1) of Public Law 103–465 and § 1.701, whereas patents (other than reissue or design) issued on applications filed on or after May 29, 2000, are subject to the patent term adjustment provisions of 35 U.S.C. 154(b) as amended by § 4402 of the ''American Inventors Protection Act of 1999'' (as it is proposed to be implemented in §§ 1.702 through 1.705).

The filing date of a continued prosecution application (CPA) under § 1.53(d) is the date that the request for CPA is filed (§ 1.53(d)(2)), even though the Office uses the filing date of the prior application for identification purposes. Therefore, the patent term adjustment provisions of 35 U.S.C. 154(b) as amended by § 4402 of the ''American Inventors Protection Act of 1999'' apply to any CPA filed on or after May 29, 2000, regardless of the filing date of the prior application of the CPA. While an applicant may file a continuing application under § 1.53(b) on or after May 29, 2000, for the application to be subject to the patent term adjustment provisions of 35 U.S.C. 154(b) as amended by § 4402 of the ''American Inventors Protection Act of 1999,'' an applicant need only file a CPA under § 1.53(d) on or after May 29, 2000, for the application to be subject to the patent term adjustment provisions of 35 U.S.C. 154(b) as amended by § 4402 of the ''American Inventors Protection Act of 1999.'' The filing of a CPA on or after May 29, 2000, does not, however, entitle an applicant to receive term adjustment for Office delays before May 29, 2000.

The six-month lead time provided in § 4405(a) for implementing the patent term adjustment provisions of § 4402 of the ''American Inventors Protection Act of 1999'' is not sufficient to conduct a notice and comment rulemaking (giving a 60-day comment period) and adopt final rules by the effective date (May 29, 2000) of the patent term adjustment provisions of § 4402 of the ''American Inventors Protection Act of 1999.'' Nevertheless, the Office does not anticipate that any patent entitled to patent term adjustment based upon the provisions of § 4402 of the ''American Inventors Protection Act of 1999'' will issue until December of 2000, at the earliest. This notice of proposed rulemaking, however, places applicants on notice as to the actions or inactions that are considered by the Office (and may be adopted in the final rules) as circumstances constituting a failure to

engage in reasonable efforts to conclude prosecution (processing or examination) of the application, and which will result in a reduction of any patent term adjustment.

Discussion of Specific Rules

Section 1.18(e) is proposed to be added to provide a $200.00 fee for filing an application for patent term adjustment under § 1.705. Section 1.18(f) is proposed to be added to provide a $450.00 fee for filing a request for reinstatement of all or part of the term reduced pursuant to § 1.704(b)(1) in an application for patent term adjustment under § 1.705. Section 1.18(d) is proposed to be added in a rulemaking to implement the eighteen-month publication provisions of the ''American Inventors Protection Act of 1999.'' The fees in proposed § 1.18(e) and (f) are set to recover the estimated average cost to the Office for processing and evaluating an application for patent term adjustment under § 1.705 ($200.00), and for processing and evaluating a request under 35 U.S.C. 154(b)(3)(C) for reinstatement of term reduced under 35 U.S.C. 154(b)(2)(C) ($450.00), respectively. *See* 35 U.S.C. 41(d). In view of these proposed additions to § 1.18, the heading of § 1.18 is also proposed to be amended to refer to patent ''post-allowance (including issue) fees'(instead of only patent ''issue fees'').

Subpart F of 37 CFR Part 1 is proposed to be amended to include a first undesignated center heading to read ''ADJUSTMENT OF PATENT TERM DUE TO EXAMINATION DELAY'' followed by an amended § 1.701 and newly added §§ 1.702 through 1.705 concerning patent term adjustment under 35 U.S.C. 154(b), and a second undesignated center heading to read ''EXTENSION OF PATENT TERM DUE TO REGULATORY REVIEW'' followed by current § 1.710 *et seq.* concerning patent term extension under 35 U.S.C. 156.

Section 1.701 is proposed to be amended by revising its heading to indicate that its provisions concern the term provisions of the Uruguay Round Agreements Act (Public Law 103–465), and to add a paragraph (e) to specify that the provisions of § 1.701 apply only to original patents issued on applications filed on or after June 8, 1995, and before May 29, 2000. As discussed above, the provisions of 35 U.S.C. 154(b) as amended by § 532(a)(1) of Public Law 103–465 and current § 1.701 apply to applications (other than for a reissue or design patent) filed on or after June 8, 1995, but before May 29, 2000, and the provisions of § 4402 of the ''American Inventors Protection Act of 1999'' and proposed §§ 1.702 through 1.705 apply to applications (other than for a reissue or design patent) filed on or after May 29, 2000.

Section 1.702 is proposed to be added to set forth the bases for patent term adjustment under 35 U.S.C. 154(b)(1). Section 1.702(a) as proposed indicates that a patent is entitled to patent term adjustment if the Office fails to perform certain acts of examination within specified time frames (35 U.S.C. 154(b)(1)(A)). Section 1.702(b) as proposed indicates that a patent is entitled to patent term adjustment if, subject to a number of limitations, the Office fails to issue a patent within three years of the actual filing date of the application (35 U.S.C. 154(b)(1)(B)). Section 1.702(c) as proposed indicates that a patent is entitled to patent term adjustment if the issuance of the patent was delayed by an interference proceeding (35 U.S.C. 154(b)(1)(C)(i)). Section 1.702(d) as proposed indicates that a patent is entitled to patent term adjustment if the issuance of the patent was delayed by the application being placed under a secrecy order under 35 U.S.C. 181 (35 U.S.C. 154(b)(1)(C)(ii)). Section 1.702(e) as proposed indicates that a patent is entitled to patent term adjustment if the issuance of the patent was delayed by successful appellate review under 35 U.S.C. 134, 141, or 145 (35 U.S.C. 154(b)(1)(C)(iii)). Section 1.702(f) as proposed provides that the provisions of §§ 1.702 through 1.705 apply only to original applications, except applications for a design patent, filed on or after May 29, 2000, and patents issued on such applications.

Section 1.703 as proposed specifies the period of adjustment if a patent is entitled to patent term adjustment under 35 U.S.C. 154(b)(1) and § 1.702.

Section 1.703(a) as proposed indicates that the period of adjustment under § 1.702(a) is the sum of the following periods (to the extent that such periods are not overlapping): (1) The number of days, if any, in the period beginning on the date fourteen months after the date on which the application was filed under 35 U.S.C. 111(a) or fulfilled the requirements of 35 U.S.C. 371 and ending on the mailing date of either an action under 35 U.S.C. 132, or a notice of allowance under 35 U.S.C. 151, whichever occurs first (a written restriction requirement, a written election of species requirement, and an action under *Ex parte Quayle,* 1935 Comm'r Dec. 11 (1935) are each an action under 35 U.S.C. 132); (2) the number of days, if any, in the period beginning on the date four months after the date a reply under § 1.111 was filed and ending on the mailing date of an action under 35 U.S.C. 132, or a notice of allowance under 35 U.S.C. 151, whichever occurs first; (3) the number of days, if any, in the period beginning on the date four months after the date a reply in compliance with § 1.113 (*i.e.,* only an after final reply that cancels all of the rejected claims and removes all outstanding objections and requirements or otherwise places the application in condition for allowance) was filed and ending on the date of mailing of an action under 35 U.S.C. 132, or a notice of allowance under 35 U.S.C. 151, whichever occurs first; (4) the number of days, if any, in the period beginning on the date four months after the date a notice of appeal to the Board of Patent Appeals and Interferences under 35 U.S.C. 134 and § 1.191 was filed and ending on the mailing date of an examiner's answer under § 1.193, an action under 35 U.S.C. 132, or a notice of allowance under 35 U.S.C. 151, whichever occurs first; (5) the number of days, if any, in the period beginning on the date four months after the date of a final decision by the Board of Patent Appeals and Interferences or by a Federal court in an appeal under 35 U.S.C. 141 or a civil action under 35 U.S.C. 145 or 146 in an application containing allowable claims and ending on the mailing date of either an action under 35 U.S.C. 132, or a notice of allowance under 35 U.S.C. 151, whichever occurs first; and (6) the number of days, if any, in the period beginning on the date four months after the date the issue fee was paid and all outstanding requirements were satisfied (*i.e.,* the date the issue fee was paid or the date all outstanding requirements were satisfied, whichever is later) and ending on the date a patent was issued.

Section 1.703(b) as proposed indicates that the period of adjustment under § 1.702(b) is the number of days, if any, in the period beginning on the date three years after the actual filing date of the application and ending on the date a patent was issued. Section 1.703(b) as proposed also sets forth the limitations on patent term adjustment specified in 35 U.S.C. 154(b)(1)(B)(i) and (ii). Section 1.703(b) as proposed specifically provides that the period of adjustment of the term of a patent under § 1.703(b) shall not include the period equal to the sum of the following periods: (1) The period of pendency consumed by continued examination of the application under 35 U.S.C. 132(b) (35 U.S.C. 154(b)(1)(B)(i)); (2) the period of pendency consumed by interference proceedings (35 U.S.C. 154(b)(1)(B)(ii)); (3) the period of pendency consumed by

imposition of a secrecy order (35 U.S.C. 154(b)(1)(B)(ii)); and (4) the period of pendency consumed by appellate review under 35 U.S.C. 134, 141, 145, whether successful or unsuccessful (35 U.S.C. 154(b)(1)(B)(ii)). The provisions of 35 U.S.C. 154(b)(1)(B)(iii) concerning the period of pendency consumed by delays in the processing of the application requested by the applicant are treated in § 1.704 as such delays are also circumstances constituting a failure of an applicant to engage in reasonable efforts to conclude processing or examination of the application.

Section 1.703(c) as proposed indicates that the period of adjustment under § 1.702(c) is the sum of the following periods (to the extent that such periods are not overlapping): (1) The number of days, if any, in the period beginning on the date an interference was declared or redeclared to involve the application in the interference and ending on the date that the interference was terminated with respect to the application; and (2) the number of days, if any, in the period beginning on the date prosecution in the application was suspended by the Office due to interference proceedings under 35 U.S.C. 135(a) not involving the application and ending on the date of the termination of the suspension.

Section 1.703(d) as proposed indicates that the period of adjustment under § 1.702(d) is the sum of the following periods (to the extent that such periods are not overlapping): (1) The number of days, if any, the application was maintained in a sealed condition under 35 U.S.C. 181; (2) the number of days, if any, in the period beginning on the date of mailing of an examiner's answer under § 1.193 in the application under secrecy order and ending on the date the secrecy order was removed; (3) the number of days, if any, in the period beginning on the date applicant was notified that an interference would be declared but for the secrecy order and ending on the date the secrecy order was removed; and (4) the number of days, if any, in the period beginning on the date of notification under § 5.3(c) and ending on the date of mailing of the notice of allowance under § 1.311.

Section 1.703(e) as proposed indicates that the period of adjustment under § 1.702(e) is the sum of the number of days, if any, in the period beginning on the date on which a notice of appeal to the Board of Patent Appeals and Interferences was filed under 35 U.S.C. 134 and § 1.191 and ending on the date of a final decision in favor of the applicant by the Board of Patent Appeals and Interferences or by a Federal court in an appeal under 35 U.S.C. 141 or a civil action under 35 U.S.C. 145.

Section 1.703(f) as proposed indicates that the adjustment will run from the expiration date of the patent as set forth in 35 U.S.C. 154(a)(2). Section 1.703(f) also indicates that to the extent that periods of adjustment attributable to the grounds specified in § 1.702 overlap, the period of adjustment will not exceed the actual number of days the issuance of the patent was delayed (35 U.S.C. 154(b)(2)(A)). Section 1.703(f) as proposed also specifically indicates that the term of a patent entitled to adjustment under § 1.702 and this section shall be adjusted for the sum of the periods calculated under § 1.703(a) through (e), to the extent that such periods are not overlapping, less the sum of the periods calculated under § 1.704. Section 1.703(f) as proposed also provides that the date indicated on any certificate of mailing or transmission under § 1.8 shall not be taken into account in this calculation. That is, while the date indicated on any certificate of mailing or transmission under § 1.8 will continue to be taken into account in determining timeliness, the date of filing (§ 1.6) will be the date used in a patent term adjustment calculation. Applicant may wish to consider the use of the ''Express Mail Post Office to Addressee'' service of the United States Postal Service (§ 1.10) for replies (as well as original applications) to be accorded the earliest possible filing date for patent term adjustment calculations.

Section 1.703(g) as proposed indicates that no patent, the term of which has been disclaimed beyond a specified date, shall be adjusted under §§ 1.702 and 1.703 beyond the expiration date specified in the disclaimer (35 U.S.C. 154(b)(2)(B)).

Section 1.704 as proposed implements the provisions of 35 U.S.C. 154(b)(2)(C). 35 U.S.C. 154(b)(2)(C) specifies certain circumstances as constituting a failure of an applicant to engage in reasonable efforts to conclude processing or examination of an application, and also provides for the Office to prescribe regulations establishing circumstances that constitute a failure of an applicant to engage in reasonable efforts to conclude processing or examination of the application.

Section 1.704(a) as proposed implements the provisions of 35 U.S.C. 154(b)(2)(C)(i) and indicates that the period of adjustment shall be reduced by a period equal to the period of time during which the applicant failed to engage in reasonable efforts to conclude prosecution (*i.e.,* processing or examination) of the application.

Section 1.704(b) as proposed provides that with respect to the ground for adjustments set forth in § 1.702(a) though (e), and in particular § 1.702(b), an applicant shall be deemed to have failed to engage in reasonable efforts to conclude prosecution for the cumulative total of any periods of time in excess of three months that are taken to reply to any notice or action by the Office making any rejection, objection, argument, or other request, measuring such three-month period from the date the notice or action was mailed or given to the applicant. A Notice of Omitted Items (PTO–1669) is not a notice or action by the Office making a rejection, objection, argument, or other request within the meaning of 35 U.S.C. 154(b)(2)(C)(ii) or § 1.704(b), since the Office does not require a reply to that notice to continue the processing and examination of the application. The three-month period in 35 U.S.C. 154(b)(2)(C)(ii) and § 1.704(b) applies regardless of the period for reply set in the Office action or notice. For example, if an Office action sets a one-month period for reply (restriction requirement), the applicant may obtain a two-month extension of time under § 1.136(a) before being subject to a reduction of patent term adjustment under 35 U.S.C. 154(b)(2)(C)(ii) and § 1.704(b). If, however, an Office action set a six-month period for reply, as is commonly set in applications subject to secrecy orders (see section 130 of the *Manual of Patent Examining Procedure* (7th ed. 1998) (MPEP)), the applicant is subject to a reduction of patent term adjustment under 35 U.S.C. 154(b)(2)(C)(ii) and § 1.704(b) if the applicant does not reply to the Office action within three months, notwithstanding that a reply may be timely filed six months after the mailing date of the Office action. Section 1.704(b) as proposed indicates that in such a case the period of adjustment set forth in § 1.703 shall be reduced by the number of days, if any, beginning on the date three months after the date of mailing of the Office communication notifying the applicant of the rejection, objection, argument, or other request and ending on the date the reply was filed.

Section 1.704(c) as proposed also establishes further circumstances that constitute a failure of an applicant to engage in reasonable efforts to conclude processing or examination of the application. Section 1.704(c)(1) through (c)(16) set forth actions or inactions by an applicant that interfere with the Office's ability to process or examine an

application (and thus circumstances that constitute a failure of an applicant to engage in reasonable efforts to conclude processing or examination of the application), as well as the period by which a period of adjustment set forth in § 1.703 shall be reduced if an applicant engages in any of the enumerated actions or inactions. Sections 1.704(c)(1) through 1.704(c)(16) address situations that occur with sufficient frequency to warrant being specifically provided for in the rules of practice. An attempt to provide an exhaustive listing of actions or inactions that interfere with the Office's ability to process or examine an application, but do not occur with great frequency (*e.g.,* applicant files and persists in requesting reconsideration of a meritless petition under § 1.10 or when the scope of the broadest claim in the application at the time an application is placed in condition for allowance is substantially the same as suggested or allowed by the examiner more than six months earlier than the date the application was placed in condition for allowance), is impractical. Thus, the actions or inactions set forth in § 1.704(c) are exemplary circumstances that constitute a failure of an applicant to engage in reasonable efforts to conclude processing or examination of the application. The Office may also reduce a period of adjustment provided in § 1.703 on the basis of conduct that interferes with the Office's ability to process or examine an application under the authority provided in 35 U.S.C. 154(b)(2)(C)(iii), even if such conduct is not specifically addressed in § 1.704(c).

Section 1.704(c)(1) as proposed establishes suspension of action under § 1.103 at the applicant's request as a circumstance that constitutes a failure of an applicant to engage in reasonable efforts to conclude processing or examination of an application. Obviously, if action is suspended at the applicant's request, the Office is precluded from processing or examining the application as a result of an action by the applicant. Section 1.704(c)(1) as proposed also provides that in such a case the period of adjustment set forth in § 1.703 shall be reduced by the number of days, if any, beginning on the date a request for suspension of action under § 1.103 was filed and ending on the date of the termination of the suspension.

Section 1.704(c)(2) as proposed establishes deferral of issuance of a patent under § 1.314 as a circumstance that constitutes a failure of an applicant to engage in reasonable efforts to conclude processing or examination of an application. Obviously, if issuance of the patent is deferred under § 1.314, the Office is precluded from issuing the application as a result of an action by the applicant. When a petition under § 1.314 is granted, the petition decision generally states that the application will be held for a period of a month to await the filing of a paper. At the end of the period, the application is returned to the issue process without a further communication from the Office to the applicant. Section 1.704(c)(2) as proposed also provides that in such a case the period of adjustment set forth in § 1.703 shall be reduced by the number of days, if any, beginning on the date a request for deferral of issuance of a patent under § 1.314 was filed and ending on the issue date of the patent.

Section 1.704(c)(3) as proposed establishes abandonment of the application or late payment of the issue fee as a circumstance that constitutes a failure of an applicant to engage in reasonable efforts to conclude processing or examination of an application. Obviously, if the application is abandoned (either by failure to prosecute or late payment of the issue fee), the Office is precluded from processing or examining the application as a result of an action or inaction by the applicant. Section 1.704(c)(3) as proposed also provides that in such a case the period of adjustment set forth in § 1.703 shall be reduced by the number of days, if any, beginning on the date of abandonment or the date after the day the issue fee was due and ending on the date of mailing of the decision reviving the application or accepting late payment of the issue fee.

Section 1.704(c)(4) as proposed establishes failure to file a petition to withdraw a holding of abandonment or to revive an application within two months from the mailing date of a notice of abandonment as a circumstance that constitutes a failure of an applicant to engage in reasonable efforts to conclude processing or examination of an application. Any applicant who considers an application to have been improperly held abandoned (the reduction in § 1.704(c)(3) is applicable to the revival of an application properly held abandoned) is expected to file a petition to withdraw the holding of abandonment (or to revive the application) within two months from the mailing date of a notice of abandonment. *See* MPEP 711.03(c)(I). Section 1.704(c)(4) as proposed also provides that in such a case the period of adjustment set forth in § 1.703 shall be reduced by the number of days, if any, beginning on the date two months from the mailing date of a notice of abandonment and ending on the date a petition to withdraw the holding of abandonment or to revive the application was filed.

Section 1.704(c)(5) as proposed establishes conversion of a provisional application under 35 U.S.C. 111(b) to a nonprovisional application under 35 U.S.C. 111(a) (pursuant to 35 U.S.C. 111(b)(5)) as a circumstance that constitutes a failure of an applicant to engage in reasonable efforts to conclude processing or examination of an application. Section 4801(a) of the ''American Inventors Protection Act of 1999'' provides for the conversion of a provisional application under 35 U.S.C. 111(b) and § 1.53(c) to a nonprovisional application under 35 U.S.C. 111(a) and § 1.53(b), and it is being implemented in a separate rulemaking. Conversion of a provisional application to a nonprovisional application will require the Office to reprocess the application (as a nonprovisional application) up to one year after the filing date that will be accorded to such nonprovisional application as a result of an action by the applicant. Section 1.704(c)(5) as proposed also provides that in such a case the period of adjustment set forth in § 1.703 shall be reduced by the number of days, if any, beginning on the date the application was filed under 35 U.S.C. 111(b) and ending on the date a request in compliance with § 1.53(c)(3) to convert the provisional application into a nonprovisional application was filed.

Section 1.704(c)(6) as proposed establishes failure to file the basic filing fee (§ 1.16(a) or (g)), any English translation required by § 1.52(d), or an oath or declaration (§ 1.63) executed by all of the inventors in an application under 35 U.S.C. 111(a) as a circumstance that constitutes a failure of an applicant to engage in reasonable efforts to conclude processing or examination of an application. The Office cannot act on an application until the applicant files the basic filing fee, an English translation (if the application is filed in a language other than English), and an oath or declaration (§ 1.63) executed in compliance with § 1.64 (by all of the inventors or applicants under §§ 1.42, 1.43, or 1.47). The rules of practice (§ 1.53(f) and 1.136(a)), however, currently permit an applicant to delay filing the basic filing fee, any English translation required by § 1.52(d), and oath or declaration by up to seven months from the date the applicant is notified that the application is missing the basic filing fee, English translation, or oath or declaration. To avoid changing these provisions and

requiring that the basic filing fee and oath or declaration be filed when an application is filed under 35 U.S.C. 111(a), the Office is setting forth failure to file the basic filing fee (§ 1.16(a) or (g)), any English translation required by § 1.52(d), or an oath or declaration (§ 1.63) executed by all of the inventors in an application under 35 U.S.C. 111(a) as a circumstance that constitutes a failure of an applicant to engage in reasonable efforts to conclude processing of the application. Section 1.704(c)(6) as proposed provides that in such a case the period of adjustment set forth in § 1.703 shall be reduced by the number of days, if any, beginning on the date the application was filed and ending on the later of the date the applicant supplied the basic filing fee (§ 1.16), an English translation (§ 1.52(d)), and an oath or declaration (§ 1.63) executed in compliance with § 1.64 and, if the oath or declaration was not executed by all of the inventors, the earliest of the date the application was accorded status under § 1.47, or four months after a grantable petition under § 1.47 was filed.

Section 1.704(c)(7) as proposed establishes failure to fulfill the requirements of 35 U.S.C. 371(c) and § 1.494 or § 1.495 in an international application as a circumstance that constitutes a failure of an applicant to engage in reasonable efforts to conclude processing of an application. The three-year period in 35 U.S.C. 154(b)(1)(B) is measured from the ''actual filing date of the application in the United States'' and 35 U.S.C. 363 provides that an international application designating the United States has the same effect from its international filing date as a national application regularly filed in the United States (except as provided in 35 U.S.C. 102(e)). Nevertheless, the Office cannot act on an international application until the applicant fulfills the requirements of 35 U.S.C. 371(c) and § 1.494 or § 1.495, and the legislative history of 35 U.S.C. 154(b) makes clear that an applicant may not use the Patent Cooperation Treaty (PCT) application filing system to have the time period set forth in § 1.494 or § 1.495 count against the three-year time period in 35 U.S.C. 154(b)(1)(B). *See* 145 Cong. Rec. S14708, S14718 (daily ed. November 17, 1999) (statement of Sen. Lott); *see also* H.R. Rep. No. 106–464 at 126 (1999). Section 1.704(c)(7) as proposed also provides that in such a case the period of adjustment set forth in § 1.703 shall be reduced by the number of days, if any, beginning on the date the international application was filed under 35 U.S.C. 363 and the later of the date the application fulfilled the requirements of 35 U.S.C. 371(c) and §§ 1.494 or 1.495 and, if the oath or declaration was not executed by all of the inventors (§ 1.497), the earliest of the date the application was accorded status under § 1.47, or four months after a grantable petition under § 1.47 was filed.

Section 1.704(c)(8) as proposed establishes failure to request the national stage of processing in an international application if the application fulfills the requirements of 35 U.S.C. 371(c) and § 1.494 or § 1.495 before the expiration of the applicable time period set forth in § 1.494(b) or § 1.495(b) as a circumstance that constitutes a failure of an applicant to engage in reasonable efforts to conclude processing or examination of an application. The Office cannot act on an international application before the expiration of the applicable time period set forth in § 1.494(b) or § 1.495(b) without the applicant's express request (35 U.S.C. 371(f)), even if the application fulfills the requirements of 35 U.S.C. 371(c) and § 1.494 or § 1.495 prior to the expiration of the applicable time period set forth in § 1.494(b) or § 1.495(b). Section 1.704(c)(8) as proposed also provides that in such a case the period of adjustment set forth in § 1.703 shall be reduced by the number of days, if any, beginning on the date the international application was filed under 35 U.S.C. 363 and the earlier of the date of expiration of the applicable time period in § 1.494(b) or § 1.495(b) or the date on which an express request for national stage of processing is filed.

Section 1.704(c)(9) as proposed establishes failure to file an application with a specification on papers in compliance with § 1.52 and having a title and abstract in compliance with § 1.72, drawings in compliance with § 1.84 (if applicable), and a sequence listing in compliance with §§ 1.821 through 1.825 (if applicable) as a circumstance that constitutes a failure of an applicant to engage in reasonable efforts to conclude processing or examination of an application. The Office must require these items during its preexamination processing of an application to implement the pre-grant publication provisions of the ''American Inventors Protection Act of 1999.'' Therefore, the Office cannot act on an application until it contains a specification on papers in compliance with § 1.52 and having an abstract (§ 1.72(b)), drawings in compliance with § 1.84 (if applicable), and a sequence listing in compliance with §§ 1.821 through 1.825 (if applicable). Section 1.704(c)(9) as proposed also provides that in such a case the period of adjustment set forth in § 1.703 shall be reduced by the number of days, if any, beginning on the filing date of the application and ending on the date the application contains a specification on papers in compliance with § 1.52 and having an abstract (§ 1.72(b)), drawings in compliance with § 1.84 (if applicable), and a sequence listing in compliance with §§ 1.821 through 1.825 (if applicable).

Section 1.704(c)(10) as proposed establishes submission of a preliminary amendment or other preliminary paper less than one month before the mailing of an Office action under 35 U.S.C. 132 or a notice of allowance under 35 U.S.C. 151 that requires the mailing of a supplemental Office action or notice of allowance as a circumstance that constitutes a failure of an applicant to engage in reasonable efforts to conclude processing or examination of an application. If the submission of a preliminary amendment or other paper requires the Office to issue a supplemental Office action or notice of allowance, the submission of that preliminary amendment or other paper has interfered with the processing and examination of an application. Section 1.704(c)(10) as proposed also provides that in such a case the period of adjustment set forth in § 1.703 shall be reduced by the number of days, if any, beginning on the mailing date of the original Office action or notice of allowance and ending on the mailing date of the supplemental Office action or notice of allowance.

Section 1.704(c)(11) as proposed establishes submission of a reply having an omission (§ 1.135(c)) as a circumstance that constitutes a failure of an applicant to engage in reasonable efforts to conclude processing or examination of an application. Submitting a reply having an omission requires the Office to issue an action under § 1.135(c) and await and process the applicant's reply before the initial reply (as completed) can be treated on its merits. Section 1.704(c)(11) as proposed also provides that in such a case the period of adjustment set forth in § 1.703 shall be reduced by the number of days, if any, beginning on the date the reply having an omission was filed and ending on the date that the omission was filed.

Section 1.704(c)(12) as proposed establishes submission of a supplemental reply or other paper after a reply has been filed as a circumstance that constitutes a failure of an applicant to engage in reasonable efforts to conclude processing or examination of an application. The submission of a

supplemental reply or other paper (*e.g.,* IDS or petition) after an initial reply was filed requires the Office to restart consideration of the initial reply in view of the supplemental reply or other paper, which will result in a delay in the Office's response to the initial reply. Section 1.704(c)(12) as proposed also provides that in such a case the period of adjustment set forth in § 1.703 shall be reduced by the number of days, if any, beginning on the date the initial reply was filed and ending on the date that the supplemental reply or such other paper was filed.

Section 1.704(c)(13) as proposed establishes failure to file an appeal brief (and brief fee) in compliance with § 1.192 with the notice of appeal to the Board of Patent Appeals and Interferences under 35 U.S.C. 134 and § 1.191 as a circumstance that constitutes a failure of an applicant to engage in reasonable efforts to conclude processing or examination of an application. The examiner cannot prepare an examiner's answer in response to an appeal until the applicant files an appeal brief in compliance with § 1.192, and the rules of practice (§§ 1.192(a) and 1.136(a)) now allow the applicant to delay filing an appeal brief for up to seven months from the filing date of the notice of appeal under § 1.191. Thus, to continue to permit this time frame for filing an appeal brief, the Office must establish the failure to file an appeal brief (and brief fee) in compliance with § 1.192 with the notice of appeal to the Board of Patent Appeals and Interferences under 35 U.S.C. 134 and § 1.191 as a circumstance that constitutes a failure of an applicant to engage in reasonable efforts to conclude processing or examination of the application. Section 1.704(c)(13) as proposed also provides that in such a case the period of adjustment set forth in § 1.703 shall be reduced by the number of days, if any, beginning on the date a notice of appeal under 35 U.S.C. 134 and § 1.191 was filed and ending on the day an appeal brief (and brief fee) in compliance with § 1.192 was filed, or, if no appeal brief under § 1.192 is filed, ending on the day an amendment in compliance with § 1.113 was filed.

Section 1.704(c)(14) as proposed establishes submission of an amendment or other paper in an application containing allowed claims after a decision by the Board of Patent Appeals and Interferences (other than a decision containing a rejection under § 1.196(b)) or a Federal court less than one month before the mailing of an Office action under 35 U.S.C. 132 or notice of allowance under 35 U.S.C. 151 that requires the mailing of a supplemental Office action or supplemental notice of allowance as a circumstance that constitutes a failure of an applicant to engage in reasonable efforts to conclude processing or examination of the application. The submission of an amendment or other paper (*e.g.,* IDS or petition) in an application after a Board of Patent Appeals and Interferences or court decision requires the Office to restart consideration of the application in view of the amendment or other paper, which will result in a delay in the Office's taking action on the application. Section 1.704(c)(14) as proposed also provides that in such a case the period of adjustment set forth in § 1.703 shall be reduced by the number of days, if any, beginning on the mailing date of the original Office action or notice of allowance and ending on the mailing date of the supplemental Office action or notice of allowance.

Section 1.704(c)(15) as proposed establishes submission of an amendment under § 1.312 or other paper after a notice of allowance has been given or mailed as a circumstance that constitutes a failure of an applicant to engage in reasonable efforts to conclude processing or examination of an application. The submission of amendments (or other papers) after an application is allowed causes substantial interference with the patent issue process. *See Filing of Continuing Applications, Amendments, or Petitions after Payment of Issue Fee,* Notice, 1221 *Off. Gaz. Pat. Office* 14 (April 6, 1999); and *Patents to Issue More Quickly After Issue Fee Payment,* Notice, 1220 *Off. Gaz. Pat. Office* 42 (March 9, 1999). Thus, to continue to permit applicants to submit an amendment or other paper after a notice of allowance is mailed or given, the Office must establish submission of an amendment under § 1.312 or other paper after a notice of allowance has been given or mailed as a circumstance that constitutes a failure of an applicant to engage in reasonable efforts to conclude processing or examination of the application. Section 1.704(c)(15) as proposed also provides that in such a case the period of adjustment set forth in § 1.703 shall be reduced by the lesser of: (1) The number of days, if any, beginning on the date the amendment under § 1.312 was filed and ending on the mailing date of the Office action or notice in response to the amendment under § 1.312 or such other paper; or (2) four months. The ''lesser of * * * or four months'' provision is to provide a four-month cap for reductions under § 1.704(c)(15).

Section 1.704(c)(16) as proposed establishes further prosecution via a continuing application as a circumstance that constitutes a failure of an applicant to engage in reasonable efforts to conclude processing or examination of the application. Currently, a continuing application may be used to: (1) Obtain further examination of an invention disclosed and claimed in the prior application (continuation application); (2) obtain examination (for the first time) of an invention disclosed but not claimed or not elected for examination in the prior application (divisional application); or (3) obtain examination of an invention neither disclosed nor claimed in the prior application (continuation-in-part application). The provisions of 35 U.S.C. 132(b) (which are being implemented in a separate rulemaking) will permit an applicant to obtain further or continued examination of an invention disclosed and claimed in an application, which renders it unnecessary for an applicant whose application is eligible for patent term adjustment under 35 U.S.C. 154(b) to file a continuing application to obtain further examination of an invention disclosed and claimed in an application. If an applicant is filing a continuing application to obtain examination (for the first time) of an invention disclosed but not claimed or not elected for examination in the prior application or an invention neither disclosed nor claimed in the prior application, it is not appropriate for that applicant to obtain any benefit in the continuing application for examination delays that might have occurred in the prior application. Thus, the Office is establishing further prosecution via a continuing application as a circumstance that constitutes a failure of an applicant to engage in reasonable efforts to conclude processing or examination of the application, in that the period of adjustment set forth in § 1.703 shall not include any period that is prior to the actual filing date of the application that resulted in the patent. Thus, if the application that resulted in the patent is a CPA, the period of adjustment set forth in § 1.703 (if any) will not include any period that is prior to the filing date of the request for that CPA.

As discussed above, an applicant may file a CPA under § 1.53(d) on or after May 29, 2000, for the application to be subject to the patent term adjustment provisions of 35 U.S.C. 154(b) as amended by § 4402 of the ''American Inventors Protection Act of 1999.'' The period of patent term adjustment § 1.703

(if any), however, will not include any period that is prior to the filing date of the request for that CPA.

These are three examples of how 35 U.S.C. 154(b) and the proposed rules to implement 35 U.S.C. 154(b) would apply. For purposes of clarity and ease of calculation, the examples illustrate mailing of some Office actions on non-business days, and granting of patents on days other than Tuesdays.

In a first example: (1) A first application (''Application A'') is filed on January 2, 1998; (2) a second application (''Application B'') is filed as a continued prosecution application (CPA under § 1.53(d)) of Application A on May 29, 2000, without payment of the filing fee or providing a deposit account authorization for payment of the filing fee; (3) a ''Notice to File Missing Parts of Application (CPA)'' is mailed on July 25, 2000, requiring the filing fee, and setting a two-month period for reply; (4) the filing fee is paid on September 25, 2000; (5) a written restriction requirement is mailed on November 13, 2000; (6) a petition for a four-month extension of time and an election are filed on April 6, 2001; (7) an Office action (first action on the merits) is mailed on September 10, 2001; (8) an amendment is filed in reply (§ 1.111) to that Office action on November 1, 2001; (9) a notice of allowability requiring a biological material deposit (§ 1.809(c)) and notice of allowance are mailed on December 3, 2001; (10) the issue fee is paid on February 28, 2002; (11) the biological material deposit is made on March 15, 2002, with a one-month extension of time; and (12) the patent issues on July 9, 2002.

The fourteen-month time period set forth in 35 U.S.C. 154(b)(1)(A)(i)(§ 1.702(a)(1) and § 1.703(a)(1)) was met by the mailing of the written restriction requirement on November 13, 2000, within fourteen months of the filing date of the application (May 29, 2000). The four-month time period set forth in 35 U.S.C. 154(b)(1)(A)(ii)(§ 1.702(a)(2) and § 1.703(a)(2)) was not met for acting on the reply (election) of April 6, 2001, but was met for acting on the reply (amendment) of November 1, 2001. The four-month time period for acting on the reply of April 6, 2001, expired on August 6, 2001; however, the Office's response to the reply of April 6, 2001, was not mailed until September 10, 2001, the difference in time between August 6, 2001, and September 10, 2001, being 35 days. The four-month time period set forth in 35 U.S.C. 154(b)(1)(A)(iii)(§ 1.702(a)(2) through (a)(3) and § 1.703(a)(3) through (a)(4)) is not applicable in this example. The four-month time period set forth in 35 U.S.C. 154(b)(1)(A)(iv)(§ 1.702(a)(4) and § 1.703(a)(6)) was met as all formal requirements were satisfied on March 15, 2002, and the patent was issued on July 9, 2002 (within four months of March 15, 2002). As the application (Application B) was pending for less than three years (from May 29, 2000, until July 9, 2002), there is no adjustment pursuant to 35 U.S.C. 154(b)(1)(B)(§ 1.702(b) and § 1.703(b)). In addition, as there was also no interference, secrecy order or appellate review in the application, there is no adjustment pursuant to 35 U.S.C. 154(b)(1)(C)(§ 1.702(b) through (e) and § 1.703(c) through (e)).

35 U.S.C. 154(b)(2)(C)(i) provides that the period of adjustment shall be reduced by the period of time during which applicant failed to engage in reasonable efforts to conclude prosecution of the application. Section 1.704(b) as proposed sets forth that any time periods in excess of three months taken to reply to any notice or action by the Office shall each be deemed failures to engage in reasonable efforts to conclude prosecution of an application, and that the period of adjustment shall be reduced by the period of time beginning on the date three months after the date of mailing of the Office communication notifying the applicant of the rejection, objection, argument, or other request and ending on the date the reply was filed. In this example, the period of time from three months after the written restriction (February 13, 2001) until the reply (April 6, 2001) is 52 days, and the period of time from three months after the notice of allowance (March 3, 2002) and the date the biological material deposit was made (March 15, 2002) is 12 days, for a total reduction under § 1.704(b) of 64 days. Sections 1.704(c)(1) through 1.704(c)(16) as proposed set forth actions or inactions, each of which further constitutes a failure by the applicant to engage in reasonable efforts to conclude prosecution of an application. As applicable in this example, proposed § 1.704(c)(6) provides that a failure to file the basic filing fee of an application on filing will result in a reduction of any period of adjustment (§ 1.703) by the period between the application filing date and the submission of the basic filing fee, and proposed § 1.704(c)(16) provides that the period of adjustment (§ 1.703) shall not include any period that is prior to the actual filing date of the application that resulted in the patent. In this example, the period of time from filing of Application B (May 29, 2000) until submission of the basic filing fee (September 25, 2000) is 119 days, and the period of adjustment does not include any period that is prior to May 29, 2000 (the actual filing date of Application B).

Accordingly, the total period during which applicant failed to engage in reasonable efforts to conclude prosecution would be 64 days (1.704(b)) plus 119 days (1.704(c)) for a total of 183 days. It should be noted that the reduction attributed to the extension of time (§ 1.704(b)) may be reduced if a proper showing pursuant to § 1.705(c) is submitted after mailing of the notice of allowance and before or with payment of the issue fee.

In this example, the period of adjustment pursuant to 35 U.S.C. 154(b)(1)(§ 1.702 and § 1.703) is 35 days, which is reduced by the 183-day period in which applicant failed to engage in reasonable efforts to conclude prosecution (§ 1.704). Since 35 is less than 183, there is no adjustment to the term of the patent issuing on Application B, whose projected expiration date remains January 2, 2018.

In a second example: (1) An application is filed which includes a sequence listing as required by § 1.821(c) on March 1, 2001; (2) a PTOL–1661 Notice stating that the computer readable form (CRF) was not in compliance with the requirements of § 1.824 was mailed by the Office on April 1, 2001; (3) Applicant submits a substitute or corrected CRF on May 1, 2001; (4) a second PTOL–1661 Notice stating that the corrected or substitute CRF is not in compliance with the requirements of § 1.824 was mailed by the Office on June 1, 2001; (5) a second corrected CRF is submitted on July 1, 2001; (6) a third PTOL–1661 Notice stating that the corrected or substitute CRF is not in compliance with the requirements of § 1.824 was mailed by the Office on September 1, 2001; (7) a third corrected CRF is submitted on October 1, 2001; (8) a fourth PTOL–1661 Notice stating that the corrected or substitute CRF is not in compliance with the requirements of § 1.824 was mailed by the Office on December 1, 2002; (9) a fourth corrected CRF is submitted on January 1, 2002; (10) a fifth PTOL–1661 Notice stating that the corrected or substitute CRF is not in compliance with the requirements of § 1.824 was mailed by the Office on February 1, 2002; (11) a proper CRF submission is filed on March 1, 2002; (12) an Office action (first action on the merits) is mailed on July 1, 2002; (13) an amendment is filed in reply (§ 1.111) to that Office action on October 1, 2002;

(14) a second Office action is mailed on February 1, 2003; (15) an amendment is filed in reply to the second Office action on May 1, 2003; (16) a third (final) Office action is mailed on September 1, 2003; (17) an amendment is filed, which adopts the allowable subject matter noted in the final Office action, on November 1, 2003; (18) a notice of allowance and notice of allowability are mailed by the Office on December 1, 2003; (19) applicant provides the issue fee on January 1, 2004; (20) the patent issues on March 1, 2004.

The fourteen-month period set forth in 35 U.S.C. 154(b)(1)(A)(i) (§§ 1.702(a)(1) and 1.703(a)(1)) was not met by the mailing of the first Office action on July 1, 2002, by a 61-day period. The four-month time period set forth in 35 U.S.C. 154(b)(1)(A)(ii) (§ 1.702(a)(2) and § 1.703(a)(2)) was met for acting on the replies of October 1, 2002, May 1, 2003, and November 1, 2003. The four-month time period set forth in 35 U.S.C. 154(b)(1)(A)(iv)(§ 1.702(a)(4) and § 1.703(a)(6)) was met as all formal requirements were satisfied on January 1, 2004, and the patent was issued on March 1, 2004 (within four months of January 1, 2004). As the application was pending for three years (from March 1, 2001, to March 1, 2004), there is no adjustment pursuant to 35 U.S.C. 154(b)(1)(B)(§ 1.702(b) and § 1.703(b)). In addition, as there was also no interference, secrecy order or appellate review in the application, there is no adjustment pursuant to 35 U.S.C. 154(b)(1)(C)(§ 1.702(b) through (e) and § 1.703(c) through (e)).

35 U.S.C. 154(b)(2)(C)(i) provides that the period of adjustment shall be reduced by the period of time during which applicant failed to engage in reasonable efforts to conclude prosecution of the application. Sections 1.704(b) and 1.704(c)(1) through 1.704(c)(16) as proposed set forth actions or inactions, each of which constitutes a failure by the applicant to engage in reasonable efforts to conclude prosecution of an application. As applicable in this example, proposed § 1.704(c)(9) provides that a failure to file an application with a sequence listing in compliance with §§ 1.821 through 1.825 will result in a reduction of any period of adjustment (§ 1.703) by the period between the application filing date and the date a sequence listing in compliance with §§ 1.821 through 1.825 is submitted. In this example, the period of time from filing date (March 1, 2001) and the filing of the correct CRF submission (March 1, 2002) is 365 days.

In this example, the period of adjustment pursuant to 35 U.S.C. 154(b)(1)(§ 1.702 and § 1.703) is 61 days, which is reduced by the 365-day period in which applicant failed to engage in reasonable efforts to conclude prosecution (§ 1.704). Since 61 is less than 365, there is no adjustment to the term of the patent, whose projected expiration date remains March 1, 2021.

In a third example: (1) An international application is filed in the United States Receiving Office on January 1, 2001; (2) a Demand for international preliminary examination is filed on July 1, 2002; (3) the documents and fees to fulfill the requirements of 35 U.S.C. 371(c) (§ 1.495) were filed on July 1, 2003; (4) an Office action is mailed on November 1, 2003; (5) a reply to the first Office action is filed May 1, 2004, with a three-month extension of time; (6) a notice of allowance and notice of allowability are mailed on February 1, 2009; (7) applicant pays the issue fee on March 1, 2009; (8) patent issues on July 1, 2010.

The fourteen-month period set forth in 35 U.S.C. 154(b)(1)(A)(i) (§§ 1.702(a)(1) and 1.703(a)(1)) was met by the mailing of the first Office action on November 1, 2003, since the fourteen-month period is measured from the date on which the international application fulfilled the requirements of 35 U.S.C. 371 (35 U.S.C. 154(b)(1)(A)(i)(II)). The four-month time period set forth in 35 U.S.C. 154(b)(1)(A)(ii) (§ 1.702(a)(2) and § 1.703(a)(2)) was not met for acting on the reply of May 1, 2004, by a period of 1,614 days. The four-month time period set forth in 35 U.S.C. 154(b)(1)(A)(iv)(§ 1.702(a)(4) and § 1.703(a)(6)) was not met as all formal requirements were satisfied on March 1, 2009, and the patent was issued on July 1, 2010, 365 days after the expiration of the four-month time period (on July 1, 2009) for issuing the patent. The application was pending for more than three years from January 1, 2001, to July 1, 2010, without continued examination under 35 U.S.C. 132(b), a proceeding under 35 U.S.C. 135(a) (interference), an order under 35 U.S.C. 181 (secrecy order), or appellate review.

Therefore, there is an adjustment pursuant to 35 U.S.C. 154(b)(1)(B) (§ 1.702(b) and § 1.703(b)) of 2,373 days. As there was no interference, secrecy order or appellate review in the application, there is no adjustment pursuant to 35 U.S.C. 154(b)(1)(C)(§ 1.702(c) through (e) and § 1.703(c) through (e)).

35 U.S.C. 154(b)(2)(C)(i) provides that the period of adjustment shall be reduced by the period of time during which applicant failed to engage in reasonable efforts to conclude prosecution of the application. Section 1.704(c) as proposed sets forth that any time periods in excess of three months taken to reply to any notice or action by the Office shall each be deemed failures to engage in reasonable efforts to conclude prosecution of an application, and that the period of adjustment shall be reduced by the period of time beginning on the date three months after the date of mailing of the Office communication notifying the applicant of the rejection, objection, argument, or other request and ending on the date the reply was filed. In this example, the period of time from three months after the Office action (November 1, 2003) until the reply (May 1, 2004) is 90 days. Sections 1.704(c)(1) through 1.704(c)(16) as proposed set forth actions or inactions, each of which further constitutes a failure by the applicant to engage in reasonable efforts to conclude prosecution of an application. As applicable in this example, proposed § 1.704(c)(7) provides that a failure to fulfill the requirements of 35 U.S.C. 371(c) and § 1.494 or § 1.495 in an international application will result in a reduction of any period of adjustment (§ 1.703) by the period between the date the application was filed under 35 U.S.C. 363 and the later date the application fulfilled the requirements of 35 U.S.C. 371(c) and § 1.494 or § 1.495 or, if the oath or declaration (§ 1.497) is not executed by all of the inventors, the earliest of the date the application was accorded status under § 1.47, or four months after a grantable petition under § 1.47 was filed. In this example, the period of time from filing (January 1, 2001) and fulfillment of 35 U.S.C. 371(c) and § 1.494 or § 1.495 (July 1, 2003) is 911 days. The total period during which applicant failed to engage in reasonable efforts to conclude prosecution would be 90 days (1.704(b)) plus 911 days (1.704(c)) for a total of 1,001 days.

As set forth in § 1.703(f), the term adjustment is the sum of the periods calculated under § 703(a)–(e), to the extent the periods are not overlapping, less the sum of the periods calculated under § 1.704. In this example, the period of adjustment pursuant to 35 U.S.C. 154(b)(1)(§ 1.703(b)) of 2,373 days overlaps entirely with the period of adjustment pursuant to 35 U.S.C. 154(b)(1)(§ 1.703(a)) of 1,979 days. Consequently, 1,001 days (the sum of the periods in which applicant failed to engage in reasonable efforts to conclude prosecution (§ 1.704)) is deducted from 2,373 days, which leaves a term adjustment of 1,372 days. As a result,

the projected expiration date of the patent is adjusted from January 1, 2021, to October 4, 2024.

Section 1.705 as proposed implements the provisions of 35 U.S.C. 154(b)(3) and (b)(4)(B).

Section 1.705(a) as proposed indicates that the notice of allowance will include notification of any patent term adjustment under 35 U.S.C. 154(b) (35 U.S.C. 154(b)(3)(B)(i)).

Section 1.705(b) as proposed provides that any request for review or reconsideration of the patent term adjustment indicated in the notice of allowance (except as provided in § 1.705(d)) and any request for reinstatement of all or part of the term reduced pursuant to § 1.704(b)(1) must be filed no later than payment of the issue fee but may not be filed earlier than the date of mailing of the notice of allowance. Section 1.705(b) as proposed provides that any such request must be by way of an application for patent term adjustment accompanied by the fee set forth in § 1.18(e) and a statement of the facts involved. Section 1.705(b) as proposed also provides that such statement of facts must specify: (1) The basis or bases under § 1.702 for the adjustment; (2) the relevant dates as specified in § 1.703(a) through (e) for which an adjustment is sought and the adjustment as specified in § 1.703(f) to which the patent is entitled; (3) whether the patent is subject to a terminal disclaimer and any expiration date specified in the terminal disclaimer; and (4) any circumstances during the prosecution of the application resulting in the patent that constitute a failure to engage in reasonable efforts to conclude processing or examination of such application as set forth in § 1.704 (or that there were no such circumstances). Since the Office must complete its determination of patent term adjustment before proceeding to issue the patent (35 U.S.C. 154(b)(3)(D)), the Office must require that such application for patent term adjustment be filed within a non-extendable time period and set forth with particularity why the Office's patent term adjustment determination is not correct. In the absence of these requirements, the issuance of the patent will be further delayed by a protracted patent term adjustment determination proceeding.

Section 1.705(c) as proposed implements the provisions of 35 U.S.C. 154(b)(3)(C). Section 1.705(c) as proposed specifically provides that a request for reinstatement of all or part of the time reduced pursuant to § 1.704(b)(1) for failing to reply to a rejection, objection, argument, or other request within three months of the date of mailing of the Office communication notifying the applicant of the rejection, objection, argument, or other request must include: (1) the fee set forth in § 1.18(f); and (2) a showing to the satisfaction of the Director that, in spite of all due care, the applicant was unable to reply to the rejection, objection, argument, or other request within three months of the date of mailing of the Office communication notifying the applicant of the rejection, objection, argument, or other request. Section 1.705(c) as proposed also provides that the Office shall not grant any request for reinstatement for more than three additional months for each reply beyond three months of the date of mailing of the Office communication notifying the applicant of the rejection, objection, argument, or other request (35 U.S.C. 154(b)(3)(C)).

Since the Office is obligated to provide a determination of patent term adjustment under 35 U.S.C. 154(b) in the notice of allowance (*i.e.,* before the actual patent issue date), the Office must project (or estimate) the actual patent issue date and base its patent term adjustment determination on that projection. Thus, § 1.705(d) as proposed provides for a request to change the period of patent term adjustment in the event that the patent is issued on a date other than the projected date of issue and this change necessitates a revision of the patent term adjustment indicated in the notice of allowance. Section 1.705(d) specifically provides that if the patent is issued on a date other than the projected date of issue and this change necessitates a revision of the patent term adjustment indicated in the notice of allowance, the patent will indicate the revised patent term adjustment. Section 1.705(d) also provides that if the patent indicates a revised patent term adjustment due to the patent being issued on a date other than the projected date of issue, any request for reconsideration of the patent term adjustment indicated in the patent must be filed within thirty days of the date the patent issued and must comply with the requirements of § 1.705(b)(1) and § 1.705(b)(2).

Section 1.705(e) as proposed provides that the periods set forth in this section are not extendable. As discussed above, the Office must set non-extendable time periods in § 1.705 to avoid delay in the issuance of the patent.

Section 1.705(f) as proposed implements the provisions of 35 U.S.C. 154(b)(4)(B), and provides that no submission or petition on behalf of a third party concerning patent term adjustment under 35 U.S.C. 154(b) will be considered by the Office, and that any such submission or petition, will be returned to the third party, or otherwise disposed of, at the convenience of the Office.

Classification

Regulatory Flexibility Act

The Chief Counsel for Regulation of the Department of Commerce certified to the Chief Counsel for Advocacy, Small Business Administration, that the changes proposed in this notice, if adopted, would not have a significant impact on a substantial number of small entities (Regulatory Flexibility Act, 5 U.S.C. 605(b)). This rulemaking implements the provisions of §§ 4401 and 4402 of the ''American Inventors Protection Act of 1999.'' The changes proposed in this notice (if adopted) would provide procedures for the Office's patent term adjustment determination and for filing an application to request reconsideration of the Office's patent term adjustment determination.

The Office mails a notice of allowance in roughly 160,000 applications each year. The Office's patent term adjustment determination will be a calculation based upon time periods involving the dates of various actions by the Office and the applicant during the application process. Because of the number of actions by the Office and the applicant during the application process, the Office anticipates that there will be disagreement on at least one of these dates in roughly fifteen percent of applications (24,000). Based upon the percentage of applicants who are small entities (thirty percent), the Office expects that 7,200 small entities will file an application requesting reconsideration of a patent term adjustment determination each year. Since a small entity applicant who exercises reasonable due care or diligence should be able to reply to any Office action or notice within three months, the Office does not anticipate that any small entities will file a request for reinstatement of reduced patent term adjustment (based upon a showing that the applicant was unable to reply to an Office action or notice within three months in spite of all due care).

Filing an application requesting reconsideration of a patent term adjustment determination (as well as a request for reinstatement of reduced patent term adjustment) is optional. To obtain any benefit from an application requesting reconsideration of the Office's patent term adjustment determination, the applicant must plan to pay the three maintenance fees required by law (35 U.S.C. 41(b)) to

maintain a patent in force until the end of the non-adjusted patent term as specified in 35 U.S.C. 154. The current first, second, and third maintenance fees are $415.00, $950.00, and $1,455.00, respectively. Since the fee ($200.00) for filing an application requesting reconsideration of the Office's patent term adjustment determination is less than one-tenth of the combined cost of these three maintenance fees (and the fee ($450.00) for filing a request for reinstatement of reduced patent term adjustment is less than one-sixth of the combined cost of these three maintenance fees), there will not be a significant economic impact on a substantial number of small entities due to the procedures for requesting reconsideration of the Office's patent term adjustment determination.

Executive Order 13132

This rulemaking does not contain policies with federalism implications sufficient to warrant preparation of a Federalism Assessment under Executive Order 13132 (August 4, 1999).

Executive Order 12866

This rulemaking has been determined to be not significant for purposes of Executive Order 12866 (September 30, 1993).

Paperwork Reduction Act

This notice of proposed rulemaking involves information collection requirements which are subject to review by the Office of Management and Budget (OMB) under the Paperwork Reduction Act of 1995 (44 U.S.C. 3501 *et seq.*). The collection of information involved in this notice of proposed rulemaking has been reviewed and previously approved by OMB under OMB control number 0651–0020.

As required by the Paperwork Reduction Act of 1995 (44 U.S.C. 3507(d)), the Patent and Trademark Office has submitted an information collection package to OMB for its review and approval of the proposed information collections under OMB control number 0651-0020. The Patent and Trademark Office is submitting this information collection to OMB for its review and approval because this notice of proposed rulemaking will add the request for reconsideration of a patent term adjustment determination by the Patent and Trademark Office and the request for reinstatement of reduced patent term adjustment (based upon a showing that the applicant was unable to reply to an Office action or notice within three months in spite of all due care) provided for in 35 U.S.C. 154(b)(3) to that collection.

The title, description, and respondent description of the information collection is shown below with an estimate of the annual reporting burdens. Included in this estimate is the time for reviewing instructions, gathering, and maintaining the data needed, and completing and reviewing the collection of information. The principal impact of the changes in this notice of proposed rulemaking is to implement the changes to Office practice necessitated by § 4402 of the ''American Inventors Protection Act of 1999'' (enacted into law by § 1000(a)(9), Division B, of Public Law 106–113).

OMB Number: 0651–0020.

Title: Patent Term Extension.

Form Numbers: None.

Type of Review: Approved through September of 2001.

Affected Public: Individuals or households, businesses or other for-profit, not-for-profit institutions, farms, Federal Government, and state, local, or tribal governments.

Estimated Number of Respondents: 26,857.

Estimated Time Per Response: 1.15 hour.

Estimated Total Annual Burden Hours: 30,902 hours.

Needs and Uses: The information supplied to the Patent and Trademark Office by an applicant requesting reconsideration of a patent term adjustment determination under 35 U.S.C. 154(b) (proposed § 1.702 *et seq.*) is used by the Patent and Trademark Office to determine whether its determination of patent term adjustment under 35 U.S.C. 154(b) is correct, and whether the applicant is entitled to reinstatement of reduced patent term adjustment. The information supplied to the Patent and Trademark Office by an applicant seeking a patent term extension under 35 U.S.C. 156 (§ 1.710 *et seq.*) is used by the Patent and Trademark Office, the Department of Health and Human Services, and the Department of Agriculture to determine the eligibility of a patent for extension and to determine the period of any such extension. The applicant can apply for patent term and interim extensions, petition the Patent and Trademark Office to review final eligibility decisions, withdraw patent term applications, and declare his or her eligibility to apply for a patent term extension.

Comments are invited on: (1) Whether the collection of information is necessary for proper performance of the functions of the agency; (2) the accuracy of the agency's estimate of the burden; (3) ways to enhance the quality, utility, and clarity of the information to be collected; and (4) ways to minimize the burden of the collection of information to respondents.

Interested persons are requested to send comments regarding these information collections, including suggestions for reducing this burden, to Robert J. Spar, Director, Special Program Law Office, Patent and Trademark Office, Washington, D.C. 20231, or to the Office of Information and Regulatory Affairs of OMB, New Executive Office Building, 725 17th Street, N.W., Room 10235, Washington, D.C. 20503, Attention: Desk Officer for the Patent and Trademark Office.

Notwithstanding any other provision of law, no person is required to respond to nor shall a person be subject to a penalty for failure to comply with a collection of information subject to the requirements of the Paperwork Reduction Act unless that collection of information displays a currently valid OMB control number.

List of Subjects in 37 CFR Part 1

Administrative practice and procedure, Courts, Freedom of information, Inventions and patents, Reporting and recordkeeping requirements, Small businesses.

For the reasons set forth in the preamble, 37 CFR Part 1 is proposed to be amended as follows:

PART 1—RULES OF PRACTICE IN PATENT CASES

1. The authority citation for 37 CFR Part 1 is revised to read as follows:

Authority: 35 U.S.C. 2(b)(2), unless otherwise noted.

2. Section 1.18 is amended by revising the section heading, adding and reserving paragraph (d), and adding paragraphs (e) and (f) to read as follows:

§ 1.18 Patent post allowance (including issue) fees.

* * * * *

(d) [Reserved]

(e) For filing an application for patent term adjustment under § 1.705—$200.00

(f) For filing a request for reinstatement of all or part of the term reduced pursuant to § 1.704(b) in an application for patent term adjustment under § 1.705—$450.00

Subpart F—Adjustment and Extension of Patent Term

3. The heading of subpart F is revised to read as set forth above.

4. An undesignated center heading is added to Subpart F § 1.701 to read as follows:

ADJUSTMENT OF PATENT TERM DUE TO EXAMINATION DELAY

5. Section 1.701 is amended by revising the section heading and adding paragraph (e) to read as follows:

§ 1.701 Extension of patent term due to examination delay under the Uruguay Round Agreements Act (original applications, other than designs, filed on or after June 8, 1995, and before May 29, 2000).

* * * * *

(e) The provisions of this section apply only to original patents, except for design patents, issued on applications filed on or after June 8, 1995.

6. Sections 1.702 through 1.705 are added to read as follows:

§ 1.702 Grounds for adjustment of patent term due to examination delay under the Patent Term Guarantee Act of 1999 (original applications, other than designs, filed on or after May 29, 2000).

(a) *Failure to take certain actions within specified time frames.* Subject to the provisions of 35 U.S.C. 154(b) and this subpart, the term of an original patent shall be adjusted if the issuance of the patent was delayed due to the failure of the Office to:

(1) Mail at least one of a notification under 35 U.S.C. 132 or a notice of allowance under 35 U.S.C. 151 not later than fourteen months after the date on which the application was filed under 35 U.S.C. 111(a) or fulfilled the requirements of 35 U.S.C. 371;

(2) Respond to a reply under 35 U.S.C. 132 or to an appeal taken under 35 U.S.C. 134 not later than four months after the date on which the reply was filed or the appeal was taken;

(3) Act on an application not later than four months after the date of a decision by the Board of Patent Appeals and Interferences under 35 U.S.C. 134 or 135 or a decision by a Federal court under 35 U.S.C. 141, 145, or 146 where allowable claims remain in the application; or

(4) Issue a patent not later than four months after the date on which the issue fee was paid under 35 U.S.C. 151 and all outstanding requirements were satisfied.

(b) *Failure to issue a patent within three years of the actual filing date of the application.* Subject to the provisions of 35 U.S.C. 154(b) and this subpart, the term of an original patent shall be adjusted if the issuance of the patent was delayed due to the failure of the Office to issue a patent within three years after the actual filing date of the application, not including:

(1) Any time consumed by continued examination of the application under 35 U.S.C. 132(b);

(2) Any time consumed by an interference proceeding under 35 U.S.C. 135(a);

(3) Any time consumed by the imposition of a secrecy order under 35 U.S.C. 181;

(4) Any time consumed by review by the Board of Patent Appeals and Interferences or a Federal court; or

(5) Any delay in the processing of the application by the Office that was requested by the applicant.

(c) *Delays caused by interference proceedings.* Subject to the provisions of 35 U.S.C. 154(b) and this subpart, the term of an original patent shall be adjusted if the issuance of the patent was delayed due to interference proceedings under 35 U.S.C. 135(a).

(d) *Delays caused by secrecy order.* Subject to the provisions of 35 U.S.C. 154(b) and this subpart, the term of an original patent shall be adjusted if the issuance of the patent was delayed due to the application being placed under a secrecy order under 35 U.S.C. 181.

(e) *Delays caused by successful appellate review.* Subject to the provisions of 35 U.S.C. 154(b) and this subpart, the term of an original patent shall be adjusted if the issuance of the patent was delayed due to review by the Board of Patent Appeals and Interferences under 35 U.S.C. 134 or by a Federal court under 35 U.S.C. 141 or 145, if the patent was issued pursuant to a decision reversing an adverse determination of patentability.

(f) The provisions of this section and §§ 1.703 through 1.705 apply only to original applications, except applications for a design patent, filed on or after May 29, 2000, and patents issued on such applications.

§ 1.703 Period of adjustment of patent term due to examination delay.

(a) The period of adjustment under § 1.702(a) is the sum of the following periods, to the extent that the periods are not overlapping:

(1) The number of days, if any, in the period beginning on the date fourteen months after the date on which the application was filed under 35 U.S.C. 111(a) or fulfilled the requirements of 35 U.S.C. 371 and ending on the date of mailing of either an action under 35 U.S.C. 132, or a notice of allowance under 35 U.S.C. 151, whichever occurs first;

(2) The number of days, if any, in the period beginning on the date four months after the date a reply under § 1.111 was filed and ending on the date of mailing of an action under 35 U.S.C. 132, or a notice of allowance under 35 U.S.C. 151, whichever occurs first;

(3) The number of days, if any, in the period beginning on the date four months after the date a reply in compliance with § 1.113 was filed and ending on the date of mailing of an action under 35 U.S.C. 132, or a notice of allowance under 35 U.S.C. 151, whichever occurs first;

(4) The number of days, if any, in the period beginning on the date four months after the date a notice of appeal to the Board of Patent Appeals and Interferences under 35 U.S.C. 134 and § 1.191 was filed and ending on the date of mailing of an examiner's answer under § 1.193, an action under 35 U.S.C. 132, or a notice of allowance under 35 U.S.C. 151, whichever occurs first;

(5) The number of days, if any, in the period beginning on the date four months after the date of a final decision by the Board of Patent Appeals and Interferences or by a Federal court in an appeal under 35 U.S.C. 141 or a civil action under 35 U.S.C. 145 or 146 in an application containing allowable claims and ending on the date of mailing of either an action under 35 U.S.C. 132 or a notice of allowance under 35 U.S.C. 151, whichever occurs first; and

(6) The number of days, if any, in the period beginning on the date four months after the date the issue fee was paid and all outstanding requirements were satisfied and ending on the date a patent was issued.

(b) The period of adjustment under § 1.702(b) is the number of days, if any, in the period beginning on the date three years after the actual filing date of the application and ending on the date a patent was issued, but not including the sum of the following periods:

(1) The number of days, if any, in the period beginning on the date on which a request for continued examination of the application under 35 U.S.C. 132(b) was filed and ending on the date the patent was issued;

(2)(i) The number of days, if any, in the period beginning on the date an interference was declared or redeclared to involve the application in the interference and ending on the date that the interference was terminated with respect to the application; and

(ii) The number of days, if any, in the period beginning on the date prosecution in the application was suspended by the Office due to interference proceedings under 35 U.S.C. 135(a) not involving the application and ending on the date of the termination of the suspension;

(3)(i) The number of days, if any, the application was maintained in a sealed condition under 35 U.S.C. 181;

(ii) The number of days, if any, in the period beginning on the date of mailing

of an examiner's answer under § 1.193 in the application under secrecy order and ending on the date the secrecy order was removed;

(iii) The number of days, if any, in the period beginning on the date applicant was notified that an interference would be declared but for the secrecy order and ending on the date the secrecy order was removed; and

(iv) The number of days, if any, in the period beginning on the date of notification under § 5.3(c) of this chapter and ending on the date of mailing of the notice of allowance under § 1.311; and,

(4) The number of days, if any, in the period beginning on the date on which a notice of appeal to the Board of Patent Appeals and Interferences was filed under 35 U.S.C. 134 and § 1.191 and ending on the date of a final decision by the Board of Patent Appeals and Interferences or by a Federal court in an appeal under 35 U.S.C. 141 or a civil action under 35 U.S.C. 145.

(c) The period of adjustment under § 1.702(c) is the sum of the following periods, to the extent that the periods are not overlapping:

(1) The number of days, if any, in the period beginning on the date an interference was declared or redeclared to involve the application in the interference and ending on the date that the interference was terminated with respect to the application; and

(2) The number of days, if any, in the period beginning on the date prosecution in the application was suspended by the Office due to interference proceedings under 35 U.S.C. 135(a) not involving the application and ending on the date of the termination of the suspension.

(d) The period of adjustment under § 1.702(d) is the sum of the following periods, to the extent that the periods are not overlapping:

(1) The number of days, if any, the application was maintained in a sealed condition under 35 U.S.C. 181;

(2) The number of days, if any, in the period beginning on the date of mailing of an examiner's answer under § 1.193 in the application under secrecy order and ending on the date the secrecy order was removed;

(3) The number of days, if any, in the period beginning on the date applicant was notified that an interference would be declared but for the secrecy order and ending on the date the secrecy order was removed; and

(4) The number of days, if any, in the period beginning on the date of notification under § 5.3(c) of this chapter and ending on the date of mailing of the notice of allowance under § 1.311.

(e) The period of adjustment under § 1.702(e) is the sum of the number of days, if any, in the period beginning on the date on which a notice of appeal to the Board of Patent Appeals and Interferences was filed under 35 U.S.C. 134 and § 1.191 and ending on the date of a final decision in favor of the applicant by the Board of Patent Appeals and Interferences or by a Federal court in an appeal under 35 U.S.C. 141 or a civil action under 35 U.S.C. 145.

(f) The adjustment will run from the expiration date of the patent as set forth in 35 U.S.C. 154(a)(2). To the extent that periods of adjustment attributable to the grounds specified in § 1.702 overlap, the period of adjustment granted under this section shall not exceed the actual number of days the issuance of the patent was delayed. The term of a patent entitled to adjustment under § 1.702 and this section shall be adjusted for the sum of the periods calculated under paragraphs (a) through (e) of this section, to the extent that such periods are not overlapping, less the sum of the periods calculated under § 1.704. The date indicated on any certificate of mailing or transmission under § 1.8 shall not be taken into account in this calculation.

(g) No patent the term of which has been disclaimed beyond a specified date shall be adjusted under § 1.702 and this section beyond the expiration date specified in the disclaimer.

§ 1.704 Reduction of period of adjustment of patent term.

(a) The period of adjustment of the term of a patent under § 1.703(a) through (e) shall be reduced by a period equal to the period of time during which the applicant failed to engage in reasonable efforts to conclude prosecution (processing or examination) of the application.

(b) With respect to the ground for adjustment set forth in § 1.702(a) through (e), and in particular the ground of adjustment set forth in § 1.702(b), an applicant shall be deemed to have failed to engage in reasonable efforts to conclude processing or examination of the application for the cumulative total of any periods of time in excess of three months that are taken to reply to any notice or action by the Office making any rejection, objection, argument, or other request, measuring such three-month period from the date the notice or action was mailed or given to the applicant, in which case the period of adjustment set forth in § 1.703 shall be reduced by the number of days, if any, beginning on the date three months after the date of mailing of the Office communication notifying the applicant of the rejection, objection, argument, or other request and ending on the date the reply was filed.

(c) Circumstances that constitute a failure of the applicant to engage in reasonable efforts to conclude processing or examination of the application also include the following circumstances, which will result in the following reduction of the period of adjustment set forth in § 1.703 to the extent that the periods are not overlapping:

(1) Suspension of action under § 1.103 at the applicant's request, in which case the period of adjustment set forth in § 1.703 shall be reduced by the number of days, if any, beginning on the date a request for suspension of action under § 1.103 was filed and ending on the date of the termination of the suspension;

(2) Deferral of issuance of a patent under § 1.314, in which case the period of adjustment set forth in § 1.703 shall be reduced by the number of days, if any, beginning on the date a request for deferral of issuance of a patent under § 1.314 was filed and ending on the date the patent was issued;

(3) Abandonment of the application or late payment of the issue fee, in which case the period of adjustment set forth in § 1.703 shall be reduced by the number of days, if any, beginning on the date of abandonment or the date after the day the issue fee was due and ending on the date of mailing of the decision reviving the application or accepting late payment of the issue fee;

(4) Failure to file a petition to withdraw the holding of abandonment or to revive an application within two months from the mailing date of a notice of abandonment, in which case the period of adjustment set forth in § 1.703 shall be reduced by the number of days, if any, beginning on the date two months from the mailing date of a notice of abandonment and ending on the date a petition to withdraw the holding of abandonment or to revive the application was filed;

(5) Conversion of a provisional application under 35 U.S.C. 111(b) to a nonprovisional application under 35 U.S.C. 111(a) pursuant to 35 U.S.C. 111(b)(5), in which case the period of adjustment set forth in § 1.703 shall be reduced by the number of days, if any, beginning on the date the application was filed under 35 U.S.C. 111(b) and ending on the date a request in compliance with § 1.53(c)(3) to convert the provisional application into a nonprovisional application was filed;

(6) Failure to file the basic filing fee (§ 1.16(a) or (g)), any English language translation required by § 1.52(d), or an oath or declaration (§ 1.63) executed by all of the inventors in an application under 35 U.S.C. 111(a), in which case the period of adjustment set forth in § 1.703 shall be reduced by the number of days, if any, beginning on the date the application was filed and ending on the later of the date the applicant supplied the basic filing fee (§ 1.16), supplied any English language translation required by § 1.52(d), and either supplied an oath or declaration (§ 1.63) executed in compliance with § 1.64 or, if the oath or declaration was not executed by all of the inventors, the earliest of date the application was accorded status under § 1.47 or four months after a grantable petition under § 1.47 was filed;

(7) Failure to fulfill the requirements of 35 U.S.C. 371(c) and § 1.494 or § 1.495 in an international application, in which case the period of adjustment set forth in § 1.703 shall be reduced by the number of days, if any, beginning on the date the application was filed under 35 U.S.C. 363 and the later of the date the application fulfilled the requirements of 35 U.S.C. 371(c) and § 1.494 or § 1.495 or, if the oath or declaration (§ 1.497) is not executed by all of the inventors, the earliest of date the application was accorded status under § 1.47 or four months after a grantable petition under § 1.47 was filed;

(8) Failure to request the national stage of processing in an international application if the application fulfills the requirements of 35 U.S.C. 371(c) and § 1.494 or § 1.495 before the expiration of the applicable time period set forth in § 1.494(b) or § 1.495(b), in which case the period of adjustment set forth in § 1.703 shall be reduced by the number of days, if any, beginning on the date the application was filed under 35 U.S.C. 363 and ending on the earlier of date of expiration of the applicable time period in § 1.494(b) or § 1.495(b) or the date on which an express request for national stage of processing is filed;

(9) Failure to file an application with a specification on papers in compliance with § 1.52 and having a title and abstract in compliance with § 1.72, drawings in compliance with § 1.84 (if applicable), and a sequence listing in compliance with §§ 1.821 through 1.825 (if applicable), in which case the period of adjustment set forth in § 1.703 shall be reduced by the number of days, if any, beginning on the filing date of the application and ending on the date the application contains a specification on papers in compliance with § 1.52 and having an abstract (§ 1.72(b)), drawings in compliance with § 1.84 (if applicable), and a sequence listing in compliance with §§ 1.821 through 1.825 (if applicable);

(10) Submission of a preliminary amendment or other preliminary paper less than one month before the mailing of an Office action under 35 U.S.C. 132 or notice of allowance under 35 U.S.C. 151 that requires the mailing of a supplemental Office action or notice of allowance, in which case the period of adjustment set forth in § 1.703 shall be reduced by the number of days, if any, beginning on the mailing date of the original Office action or notice of allowance and ending on the mailing date of the supplemental Office action or notice of allowance;

(11) Submission of a reply having an omission under § 1.135(c), in which case the period of adjustment set forth in § 1.703 shall be reduced by the number of days, if any, beginning on the date the reply having an omission was filed and ending on the date that the omission was filed;

(12) Submission of a supplemental reply or other paper after a reply has been filed, in which case the period of adjustment set forth in § 1.703 shall be reduced by the number of days, if any, beginning on the date the initial reply was filed and ending on the date that the supplemental reply or other such paper was filed;

(13) Failure to file an appeal brief (and brief fee) in compliance with § 1.192 with a notice of appeal to the Board of Patent Appeals and Interferences under 35 U.S.C. 134 and § 1.191, in which case the period of adjustment set forth in § 1.703 shall be reduced by the number of days, if any, beginning on the date a notice of appeal to the Board of Patent Appeals and Interferences under 35 U.S.C. 134 and § 1.191 was filed and ending on the day an appeal brief in compliance with § 1.192 was filed, or, if no appeal brief under § 1.192 is filed, ending on the day an amendment in compliance with § 1.113 was filed;

(14) Submission of an amendment or other paper after a decision by the Board of Patent Appeals and Interferences, other than a decision designated as containing a new ground of rejection under § 1.196(b) or statement under § 1.196(c), or a decision by a Federal court less than one month before the mailing of an Office action under 35 U.S.C. 132 or notice of allowance under 35 U.S.C. 151 that requires the mailing of a supplemental Office action or supplemental notice of allowance, in which case the period of adjustment set forth in § 1.703 shall be reduced by the number of days, if any, beginning on the mailing date of the original Office action or notice of allowance and ending on the mailing date of the supplemental Office action or notice of allowance;

(15) Submission of an amendment under § 1.312 or other paper after a notice of allowance has been given or mailed, in which case the period of adjustment set forth in § 1.703 shall be reduced by the lesser of:

(i) The number of days, if any, beginning on the date the amendment under § 1.312 or other paper was filed and ending on the mailing date of the Office action or notice in response to the amendment under § 1.312 or such other paper; or

(ii) Four months; and

(16) Further prosecution via a continuing application, in which case the period of adjustment set forth in § 1.703 shall not include any period that is prior to the actual filing date of the application that resulted in the patent.

§ 1.705 Patent term adjustment determination.

(a) The notice of allowance will include notification of any patent term adjustment under 35 U.S.C. 154(b).

(b) Any request for reconsideration of the patent term adjustment indicated in the notice of allowance, except as provided in paragraph (d) of this section, and any request for reinstatement of all or part of the term reduced pursuant to § 1.704(b) must be by way of an application for patent term adjustment. An application for patent term adjustment under this section must be filed no later than payment of the issue fee but may not be filed earlier than the date of mailing of the notice of allowance. An application for patent term adjustment under this section must be accompanied by:

(1) The fee set forth in § 1.18(e); and

(2) A statement of the facts involved, specifying:

(i) The correct patent term adjustment and the basis or bases under § 1.702 for the adjustment;

(ii) The relevant dates as specified in § 1.703(a) through (e) for which an adjustment is sought and the adjustment as specified in § 1.703(f) to which the patent is entitled;

(iii) Whether the patent is subject to a terminal disclaimer and any expiration date specified in the terminal disclaimer; and

(iv)(A) Any circumstances during the prosecution of the application resulting in the patent that constitute a failure to engage in reasonable efforts to conclude processing or examination of such application as set forth in § 1.704; or

(B) That there were no circumstances constituting a failure to engage in

reasonable efforts to conclude processing or examination of such application as set forth in § 1.704.

(c) Any application for patent term adjustment under this section that requests reinstatement of all or part of the term reduced pursuant to § 1.704(b) for failing to reply to a rejection, objection, argument, or other request within three months of the date of mailing of the Office communication notifying the applicant of the rejection, objection, argument, or other request must also be accompanied by:

(1) The fee set forth in § 1.18(f); and

(2) A showing to the satisfaction of the Director that, in spite of all due care, the applicant was unable to reply to the rejection, objection, argument, or other request within three months of the date of mailing of the Office communication notifying the applicant of the rejection, objection, argument, or other request. The Office shall not grant any request for reinstatement for more than three additional months for each reply beyond three months of the date of mailing of the Office communication notifying the applicant of the rejection, objection, argument, or other request.

(d) If the patent is issued on a date other than the projected date of issue and this change necessitates a revision of the patent term adjustment indicated in the notice of allowance, the patent will indicate the revised patent term adjustment. If the patent indicates a revised patent term adjustment due to the patent being issued on a date other than the projected date of issue, any request for reconsideration of the patent term adjustment indicated in the patent must be filed within thirty days of the date the patent issued and must comply with the requirements of paragraphs (b)(1) and (b)(2) of this section.

(e) The periods set forth in this section are not extendable.

(f) No submission or petition on behalf of a third party concerning patent term adjustment under 35 U.S.C. 154(b) will be considered by the Office. Any such submission or petition will be returned to the third party, or otherwise disposed of, at the convenience of the Office.

7. A undesignated center heading is added to Subpart F before § 1.710 to read as follows:

EXTENSION OF PATENT TERM DUE TO REGULATORY REVIEW

Dated: March 24, 2000.

Q. Todd Dickinson,

Assistant Secretary of Commerce and Commissioner of Patents and Trademarks.

[FR Doc. 00–7938 Filed 3–30–00; 8:45 am]

BILLING CODE 3510–16–P

ENVIRONMENTAL PROTECTION AGENCY

40 CFR Part 52

[CA–207–0228; FRL–6570–3]

Approval and Promulgation of Implementation Plans; California State Implementation Plan Revision; Antelope Valley Air Pollution Control District and South Coast Air Quality Management District

AGENCY: Environmental Protection Agency (EPA).

ACTION: Proposed rule.

SUMMARY: EPA is proposing a disapproval of revisions to the California State Implementation Plan (SIP) in the Antelope Valley Air Pollution Control District (AVAPCD) and South Coast Air Quality Management District (SCAQMD). These revisions would allow the district the discretion to suspend district rules, regulations or orders in the event of a state or federally declared state of emergency. EPA has evaluated these revisions and is proposing to disapprove them because they would weaken the SIP.

DATES: Comments on this proposed action must be received by May 1, 2000.

ADDRESSES: Comments may be mailed to: Andrew Steckel, Chief, Rulemaking Office (AIR–4), Air Division, U.S. Environmental Protection Agency, Region IX, 75 Hawthorne Street, San Francisco, CA 94105–3901.

Copies of the rules are available for public inspection at EPA's Region IX office during normal business hours. Copies of the submitted rules are also available for inspection at the following locations:

California Air Resources Board, Stationary Source Division, Rule Evaluation Section, 2020 L Street, Sacramento, CA 95812

Antelope Valley Air Pollution Control District, 315 W. Pondera Street, Lancaster, California 93534

South Coast Air Quality Management District, 21865 E. Copley Drive, Diamond Bar, CA 91765

FOR FURTHER INFORMATION CONTACT: Cynthia G. Allen, Rulemaking Office (AIR–4), Air Division, U.S. Environmental Protection Agency, Region IX, 75 Hawthorne Street, San Francisco, CA 94105, Telephone (415) 744–1189.

SUPPLEMENTARY INFORMATION:

I. Applicability

The rules being proposed for disapproval are Antelope Valley Air Pollution Control District (AVAPCD) and South Coast Air Quality Management District (SCAQMD) Rule 118, Emergencies. Rule 118 was submitted to EPA by the California Air Resources Board on March 10, 1998 and May 18, 1998, respectively.

II. Background

This document addresses EPA's proposed action for Antelope Valley Air Pollution Control District (AVAPCD) and South Coast Air Quality Management District (SCAQMD) Rule 118, Emergencies. These rules were adopted by AVAPCD on August 19, 1997 and by SCAQMD on December 7, 1995. These rules were found to be complete on May 21, 1998 for AVAPCD and on July 17, 1998 for SCAQMD, pursuant to EPA's completeness criteria that are set forth in 40 CFR part 51, appendix V.[1]

III. EPA Evaluation and Proposed Action

In determining the approvability of a rule, EPA must evaluate the rule for consistency with the requirements of the CAA and EPA regulations, as found in section 110 and part D of the CAA and 40 CFR part 51 (Requirements for Preparation, Adoption and Submittal of Implementation Plans). EPA's interpretation of these requirements, which forms the basis for this action, appears in EPA policy guidance documents. In general, the guidance documents have been set forth to ensure that submitted rules meet Federal requirements, are fully enforceable, and strengthen or maintain the SIP.

There is currently no version of Antelope Valley or South Coast Rule 118, Emergencies, in the SIP. The submitted rules include the following:

- Definitions of various terms used in the rule;
- Executive Officer authority to suspend AQMD rules; regulations, or orders in the event of a state or federally-declared State of Emergency; and
- Guidelines for suspending or modifying compliance with existing rules, regulations, or permit conditions, and provisions allowing extension of suspension beyond the state of emergency.

Rules submitted to EPA for approval as revisions to the SIP must be fully enforceable, must maintain or strengthen the SIP, and must conform with EPA policy in order to be approved by EPA. AVAPCD and SCAQMD Rules 118 weaken, rather than strengthen or

[1] EPA adopted the completeness criteria on February 16, 1990 (55 FR 5830) and, pursuant to section 110(k)(l)(A) of the CAA, revised the criteria on August 26, 1991 (56 FR 42216).

maintain the SIP. Under the Clean Air Act, EPA does not have the authority to approve SIP provisions which would allow Executive Officers' discretion to suspend federally enforceable requirements. AVAPCD and SCAQMD Rule 118, if approved, would impact EPA's ability to seek injunctive relief and penalties in appropriate instances and would allow the districts to waive federally enforceable requirements contrary to section 110 of the Clean Air Act. These deficiencies undermine the prerogatives retained by EPA for protecting the NAAQS, PSD increments, and other air quality related values under section 110 and part D. Therefore, in order to maintain the SIP, EPA is proposing a disapproval of these rules. Because these rules are not required under section 110 or part D, their disapproval will not trigger sanctions or FIP requirements pursuant to section 179.

Nothing in this action should be construed as permitting or allowing or establishing a precedent for any future request for revision to any State implementation plan. Each request for revision to the State Implementation Plan shall be considered separately in light of specific technical, economic and environmental factors and in relation to relevant statutory and regulatory requirements.

IV. Administrative Requirements

A. Executive Order 12866

The Office of Management and Budget (OMB) has exempted this regulatory action from Executive Order 12866, Regulatory Planning and Review.

B. Executive Order 13132

Federalism (64 FR 43255, August 10, 1999) revokes and replaces Executive Orders 12612, Federalism and 12875, Enhancing the Intergovernmental Partnership. Executive Order 13132 requires EPA to develop an accountable process to ensure ''meaningful and timely input by State and local officials in the development of regulatory policies that have federalism implications.'' ''Policies that have federalism implications'' is defined in the Executive Order to include regulations that have ''substantial direct effects on the States, on the relationship between the national government and the States, or on the distribution of power and responsibilities among the various levels of government.'' Under Executive Order 13132, EPA may not issue a regulation that has federalism implications, that imposes substantial direct compliance costs, and that is not required by statute, unless the Federal government provides the funds necessary to pay the direct compliance costs incurred by State and local governments, or EPA consults with State and local officials early in the process of developing the proposed regulation. EPA also may not issue a regulation that has federalism implications and that preempts State law unless the Agency consults with State and local officials early in the process of developing the proposed regulation.

This proposed rule will not have substantial direct effects on the States, on the relationship between the national government and the States, or on the distribution of power and responsibilities among the various levels of government, as specified in Executive Order 13132 (64 FR 43255, August 10, 1999), because it merely approves a state rule implementing a federal standard, and does not alter the relationship or the distribution of power and responsibilities established in the Clean Air Act. Thus, the requirements of section 6 of the Executive Order do not apply to this rule.

C. Executive Order 13045

Protection of Children from Environmental Health Risks and Safety Risks (62 FR 19885, April 23, 1997), applies to any rule that: (1) Is determined to be ''economically significant'' as defined under Executive Order 12866, and (2) concerns an environmental health or safety risk that EPA has reason to believe may have a disproportionate effect on children. If the regulatory action meets both criteria, the Agency must evaluate the environmental health or safety effects of the planned rule on children, and explain why the planned regulation is preferable to other potentially effective and reasonably feasible alternatives considered by the Agency. This rule is not subject to Executive Order 13045 because it is does not involve decisions intended to mitigate environmental health or safety risks.

D. Executive Order 13084

Under Executive Order 13084, Consultation and Coordination with Indian Tribal Governments, EPA may not issue a regulation that is not required by statute, that significantly or uniquely affects the communities of Indian tribal governments, and that imposes substantial direct compliance costs on those communities, unless the Federal government provides the funds necessary to pay the direct compliance costs incurred by the tribal governments, or EPA consults with those governments. If EPA complies by consulting, Executive Order 13084 requires EPA to provide to the Office of Management and Budget, in a separately identified section of the preamble to the rule, a description of the extent of EPA's prior consultation with representatives of affected tribal governments, a summary of the nature of their concerns, and a statement supporting the need to issue the regulation. In addition, Executive Order 13084 requires EPA to develop an effective process permitting elected officials and other representatives of Indian tribal governments ''to provide meaningful and timely input in the development of regulatory policies on matters that significantly or uniquely affect their communities.'' Today's rule does not significantly or uniquely affect the communities of Indian tribal governments. Accordingly, the requirements of section 3(b) of Executive Order 13084 do not apply to this rule.

E. Regulatory Flexibility Act

The Regulatory Flexibility Act (RFA) generally requires an agency to conduct a regulatory flexibility analysis of any rule subject to notice and comment rulemaking requirements unless the agency certifies that the rule will not have a significant economic impact on a substantial number of small entities. Small entities include small businesses, small not-for-profit enterprises, and small governmental jurisdictions. This final rule will not have a significant impact on a substantial number of small entities because SIP approvals under section 110 and subchapter I, part D of the Clean Air Act do not create any new requirements but simply approve requirements that the State is already imposing. Therefore, because the Federal SIP approval does not create any new requirements, I certify that this action will not have a significant economic impact on a substantial number of small entities. Moreover, due to the nature of the Federal-State relationship under the Clean Air Act, preparation of flexibility analysis would constitute Federal inquiry into the economic reasonableness of state action. The Clean Air Act forbids EPA to base its actions concerning SIPs on such grounds. *Union Electric Co.*, v. *U.S. EPA*, 427 U.S. 246, 255–66 (1976); 42 U.S.C. 7410(a)(2).

F. Unfunded Mandates

Under section 202 of the Unfunded Mandates Reform Act of 1995 (''Unfunded Mandates Act''), signed into law on March 22, 1995, EPA must prepare a budgetary impact statement to accompany any proposed or final rule

that includes a Federal mandate that may result in estimated annual costs to State, local, or tribal governments in the aggregate; or to private sector, of $100 million or more. Under section 205, EPA must select the most cost-effective and least burdensome alternative that achieves the objectives of the rule and is consistent with statutory requirements. Section 203 requires EPA to establish a plan for informing and advising any small governments that may be significantly or uniquely impacted by the rule.

EPA has determined that the approval action promulgated does not include a Federal mandate that may result in estimated annual costs of $100 million or more to either State, local, or tribal governments in the aggregate, or to the private sector. This Federal action approves pre-existing requirements under State or local law, and imposes no new requirements. Accordingly, no additional costs to State, local, or tribal governments, or to the private sector, result from this action.

List of Subjects in 40 CFR Part 52

Environmental protection, Air pollution control, Intergovernmental relations, Reporting and recordkeeping requirements.

Authority: 42 U.S.C. 7401–7671q.

Dated: March 17, 2000.

Laura Yoshii,

Acting Regional Administrator, Region IX.

[FR Doc. 00–7993 Filed 3–30–00; 8:45 am]

BILLING CODE 6560–50–P

ENVIRONMENTAL PROTECTION AGENCY

40 CFR Parts 52 and 70

[AD–FRL–6569–2]

Clean Air Act Proposed Interim Approval of the Operating Permits Program; Proposed Approval of State Implementation Plan Revision for the Issuance of Federally Enforceable State Operating Permits; Antelope Valley Air Pollution Control District, California

AGENCY: Environmental Protection Agency (EPA).

ACTION: Proposed rule.

SUMMARY: The EPA proposes interim approval of the title V operating permits program submitted by the Antelope Valley Air Pollution Control District (Antelope Valley, or ''District'') for the purpose of complying with federal requirements that mandate that states develop, and submit to EPA, programs for issuing operating permits to all major stationary sources and to certain other sources. There are two deficiencies in Antelope Valley's program, as specified in the Technical Support Document and outlined below, that must be corrected before the program can be fully approved. EPA is also proposing to approve a revision to Antelope Valley's portion of the California State Implementation Plan (SIP) regarding synthetic minor regulations for the issuance of federally enforceable state operating permits (FESOP). In order to extend the federal enforceability of state operating permits to hazardous air pollutants (HAPs), EPA is also proposing approval of Antelope Valley's synthetic minor regulations pursuant to section 112 of the Clean Air Act (''Act''). Today's action also proposes approval of Antelope Valley's mechanism for receiving straight delegation of section 112 standards.

DATES: Comments on these proposed actions must be received in writing May 1, 2000.

ADDRESSES: Comments should be addressed to Duong Nguyen, Mail Code Air-3, U.S. Environmental Protection Agency, Region IX, Air Division, 75 Hawthorne Street, San Francisco, CA 94105.

Copies of the District's submittal and other supporting information used in developing the proposed interim approval are available for inspection during normal business hours at the following location: U.S. Environmental Protection Agency, Region IX, 75 Hawthorne Street, San Francisco, CA 94105.

FOR FURTHER INFORMATION CONTACT: Duong Nguyen (telephone 415/744–1142), Mail Code Air-3, U.S. Environmental Protection Agency, Region IX, Air & Toxics Division, 75 Hawthorne Street, San Francisco, CA 94105.

SUPPLEMENTARY INFORMATION:

I. Background and Purpose

As required under title V of the Clean Air Act (Act) as amended (1990), EPA has promulgated rules that define the minimum elements of an approvable state operating permits program and the corresponding standards and procedures by which the EPA will approve, oversee, and withdraw approval of state operating permits programs (see 57 FR 32250 (July 21, 1992)). These rules are codified at 40 CFR part 70 (part 70). Title V requires states to develop, and submit to EPA, programs for issuing operating permits to all major stationary sources and to certain other sources.

The Act requires that states develop and submit title V programs to EPA by November 15, 1993, and that EPA act to approve or disapprove each program within 1 year after receiving the submittal. The EPA's program review occurs pursuant to section 502 of the Act and the part 70 regulations, which together outline criteria for approval or disapproval. Where a program substantially, but not fully, meets the requirements of part 70, EPA may grant the program interim approval for a period of up to 2 years. If EPA has not fully approved a program by the end of an interim program, it must establish and implement a federal program.

On June 28, 1989 (54 FR 27274), EPA published criteria for approving and incorporating into the SIP regulatory programs for the issuance of federally enforceable state operating permits. Permits issued pursuant to an operating permit program meeting these criteria and approved into the SIP are considered federally enforceable. EPA has encouraged states to consider developing such programs in conjunction with title V operating permit programs for the purpose of creating federally enforceable limits on a source's potential to emit. This mechanism would enable sources to reduce their potential to emit to below the title V applicability thresholds and avoid being subject to title V. (See the guidance document entitled, ''Limitation of Potential to Emit with Respect to Title V Applicability Thresholds'', dated September 18, 1992, from John Calcagni, Director of EPA's Air Quality Management Division.) On November 3, 1993, EPA announced in a guidance document entitled, ''Approaches to Creating Federally Enforceable Emissions Limits,'' signed by John S. Seitz, Director of EPA's Office of Air Quality Planning and Standards (OAQPS), that this mechanism could be extended to create federally enforceable limits for emissions of hazardous air pollutants (HAPs) if the program were approved pursuant to section 112(l) of the Act.

II. Proposed Action and Implications

Antelope Valley is a new air district created by the state legislature in 1997. Sources in Antelope Valley were previously under the jurisdiction of the South Coast Air Quality Management District. This document focuses on specific elements of Antelope Valley's title V operating permits program submittal that must be corrected to meet the minimum requirements of 40 CFR part 70. The full program submittal, the Technical Support Document containing a detailed analysis of the full

program, and other relevant materials are available as part of the public docket.

A. Analysis of State Submission

1. Title V Support Materials

Antelope Valley's title V program was submitted by the California Air Resources Board (CARB) on January 26, 1999 and found by EPA to be complete on March 26, 1999. The Governor's letter requesting source category-limited interim approval, California enabling legislation, and Attorney General's legal opinion were submitted by CARB for all districts in California and therefore were not included separately in Antelope Valley's submittal. The Antelope Valley submission does contain a complete program description, District implementing and supporting regulations, and all other program documentation required by § 70.4.

2. Title V Operating Permit Regulations and Program Implementation

The Antelope Valley's title V regulations were adopted on March 17, 1998. They consist of Regulation XXX (Federal Operating Permits). The District also submitted supporting materials including the following rules: Rule 219 (Equipment Not Requiring a Permit, adopted July 21, 1998), Rule 225 (Federal Operating Permit Requirement, adopted March 17, 1998), Rule 226 (Limitation on Potential to Emit, adopted July 21, 1998), Rule 301 (Permit Fees, adopted March 17, 1998), Rule 312 (Fees for Federal Operating Permits, adopted May 19, 1998), and Rule 430 (Breakdown Provisions, adopted March 17, 1998). These regulations ''substantially meet'' the requirements of 40 CFR 70.2 and 70.3 for applicability; §§ 70.4, 70.5, and 70.6 for permit content, including operational flexibility; § 70.7 for public participation and minor permit modifications; § 70.5 for complete application forms; and § 70.11 for enforcement authority. While the regulations substantially meet part 70 requirements, there are several program deficiencies, or interim approval issues. These issues are outlined below. Recommended changes are detailed further in the Technical Support Document.

Variances—Antelope Valley has authority under State and local law to issue a variance from State and local requirements. Sections 42350 *et seq.* of the California Health and Safety Code and District Regulation 1, sections 431–433 allow the District to grant relief from enforcement action for permit violations. The EPA regards these provisions as wholly external to the program submitted for approval under part 70, and consequently, is proposing to take no action on these provisions of State and local law.

The EPA has no authority to approve provisions of state or local law, such as the variance provisions referred to, that are inconsistent with the Act. The EPA does not recognize the ability of a permitting authority to grant relief from the duty to comply with a federally enforceable part 70 permit, except where such relief is granted through procedures allowed by part 70. A part 70 permit may be issued or revised (consistent with part 70 permitting procedures) to incorporate those terms of a variance that are consistent with applicable requirements. A part 70 permit may also incorporate, via part 70 permit issuance or modification procedures, the schedule of compliance set forth in a variance. However, EPA reserves the right to pursue enforcement of applicable requirements notwithstanding the existence of a compliance schedule in a permit to operate. This is consistent with 40 CFR 70.5(c)(8)(iii)(C), which states that a schedule of compliance ''shall be supplemental to, and shall not sanction noncompliance with, the applicable requirements on which it is based.''

Insignificant Activities—§ 70.4(b)(2) requires states to include in their part 70 programs any criteria used to determine insignificant activities or emission levels for the purpose of determining complete applications. Section 70.5(c) states that an application for a part 70 permit may not omit information needed to determine the applicability of, or to impose, any applicable requirement, or to evaluate appropriate fee amounts. Section 70.5(c) also states that EPA may approve, as part of a state program, a list of insignificant activities and emissions levels which need not be included in permit applications. Under part 70, a state must request and EPA must approve as part of that state's program any activity or emission level that the state wishes to consider insignificant. Part 70, however, does not establish appropriate emission levels for insignificant activities, relying instead on a case-by-case determination of appropriate levels based on the particular circumstances of the part 70 program under review.

In Rule 219 (Equipment Not Requiring a Permit) Antelope Valley provided both threshold emissions levels and a list of specific equipment which would not require a permit. This rule also clearly states that equipment need not be listed in a permit application for a federal operating permit if it falls below the threshold, is on the list of equipment in the rule, is not subject to an applicable requirement, and is not included in the equipment list solely due to size or production rate.

Rule 219 set the threshold criteria for equipment to be exempt from a federal operating permit as 10% of the applicable threshold for determination of a major source, or 5 tons per year of any regulated air pollutant (whichever is less), and for HAPs any *de minimis* level, any significance level, or 0.5 tons per year (whichever is less). The levels established by Rule 219 exceed levels EPA has accepted for other state and district programs: 2 tons per year for criteria pollutants and the lesser of 1000 pounds per year, section 112(g) *de minimis* levels, or other title I significant modification levels for HAPs and other toxics (40 CFR 52.21(b)(23)(i)).

During discussions between Antelope Valley and EPA staff on this issue, the District stated that the District would wait for a CAPCOA/EPA Workgroup on insignificant activities to publish its recommendations, before revising Rule 219 to address EPA's concerns. On February 19, 1999, the Workgroup issued the ''Model List of Insignificant Activities for Title V Permit Program.'' In this document, the general insignificant activity criteria for emissions were set as: no more than 0.5 ton/year of a federal HAP and no more than 2 tons/year of a regulated pollutant that is not a HAP. Consequently, the District stated that Rule 219 will be amended to lower the insignificant activity threshold to 2 tons per year for a regulated air pollutant. This issue is identified below as an interim approval deficiency.

3. Title V Permit Fee Demonstration

Section 502(b)(3) of the Act requires that each permitting authority collect fees sufficient to cover all reasonable direct and indirect costs required to develop and administer its title V operating permits program. Each title V program submittal must contain either a detailed demonstration of fee adequacy or a demonstration that aggregate fees collected from title V sources meet or exceed $33.82 per ton of emissions per year (adjusted from 1989 by the Consumer Price Index (CPI)). The $33.82 per ton amount is presumed, for program approval, to be sufficient to cover all reasonable program costs and is thus referred to as the ''presumptive minimum.'' See § 70.9(b)(2)(i).

Antelope Valley has opted to make a presumptive minimum fee demonstration. Antelope Valley's existing fee schedule (Element 7)

requires title V facilities to pay an amount approximately equal to $217 per ton in annual operating fees. This amount meets EPA's presumptive minimum (CPI adjusted). The $217 per ton amount is based on dividing the current fee revenues for title V work (40% of the total permit fees) plus a flat annual surcharge that covers the additional costs posed by title V by the total emissions (based on the 1996 inventory). It should be noted that the $217 per ton figure may change as Antelope Valley is a new district with no prior operating history and a fee structure inherited from the South Coast Air Quality Management District, from which it separated in 1997. The annual fee number will be adjusted to reflect actual and more accurate operating data as it becomes available. Antelope Valley will maintain an accounting system and is prepared to increase fees, as needed, to reflect actual program implementation costs.

4. Provisions Implementing the Requirements of Other Titles of the Act

a. Section 112—Antelope Valley has demonstrated in its title V program submittal adequate legal authority to implement and enforce all section 112 requirements through the title V permit. This legal authority is contained in the State of California enabling legislation and in regulatory provisions defining ''applicable requirements'' and ''federally enforceable'' and mandating that all federal air quality requirements must be incorporated into permits. EPA has determined that this legal authority is sufficient to allow Antelope Valley to issue permits that assure compliance with all section 112 requirements. For further discussion, please refer to the Technical Support Document accompanying this action and the April 13, 1993 guidance memorandum entitled, ''Title V Program Approval Criteria for Section 112 Activities,'' signed by John Seitz.

b. Title IV—Antelope Valley Governing Board adopted Rule 3010 (Acid Rain Provision of Federal Operating Permits) on March 17, 1998, which incorporates the pertinent provisions of part 72, either by reference or in specific language in the rule. EPA interprets ''pertinent provisions'' to include all provisions necessary for the permitting of affected sources.

B. Proposal for and Implications of Interim Approval

1. Title V Operating Permits Program

a. *Proposed Interim Approval*—The EPA is proposing to grant interim approval to the operating permits program submitted by CARB on behalf of Antelope Valley on January 26, 1999. Following interim approval, Antelope Valley must make the following changes to receive full approval:

(1) Section 70.7(f)(1)(i) provides that no reopening of the permit is required if the effective date of a new, applicable requirement is later than the permit expiration date, unless the original permit or any of its terms and conditions has been extended per § 70.4(b)(10). Section 70.4(b)(10) provides that the original permit shall remain in effect until the renewal permit has been issued or denied, if a timely and complete application is submitted for a permit renewal.

Antelope Valley's Rule 3006(A)(1)(a)(i) states that no reopening is required if an additional requirement's effective date is later than the permit's expiration date, unless the permit or any of its terms has been extended per Rule 3002(E)(2)(b). However, Rule 3002(E)(2)(b) only provides that all terms and conditions in the original permit shall remain in effect, until a permit renewal has been issued, denied, or the original permit has been terminated for cause. This provision did not address the important § 70.4(b)(10) requirement that the original permit can only remain in effect, if a timely and complete application is submitted for a permit renewal. Still, a broader examination of Rule 3002(E)(2) reveals that the timely application requirement is covered in 3002(E)(2)(a). Therefore, in order to ensure complete compliance with § 70.4(b)(10) requirements, Antelope Valley must revise Rule 3006(A)(1)(a)(i) to state that no reopening is required if an additional requirement's effective date is later than the permit's expiration date, unless the permit or any of its terms has been extended per Rule 3002(E)(2). (Antelope Valley indicated that this was an oversight and will be corrected at the earliest opportunity to revise Rule 3002.)

(2) Revise Antelope Valley's Rule 219 to lower the insignificant activity emission cutoff for a regulated pollutant that is not a HAPs to 2 tons/year, as recommended by EPA and the CAPCOA/EPA Workgroup on Insignificant Activities.

b. *Legislative Source Category—Limited Interim Approval Issue*—In addition to the District-specific issues arising from Antelope Valley's program submittal and locally adopted regulations, California State law currently exempts agricultural production sources from permit requirements. Because of this exemption, California programs are only eligible for source category-limited interim approval. In order for this program to receive full approval (and avoid a disapproval upon the expiration of this interim approval), the California Legislature must revise the Health and Safety Code to eliminate the exemption of agricultural production sources from the requirement to obtain a permit.

c. *Implications of Interim Approval*—The above described program and legislative deficiencies must be corrected before Antelope Valley can receive full program approval. For additional information, please refer to the Technical Support Document, which contains a detailed analysis of Antelope Valley's operating permits program, and California's enabling legislation.

Interim approval, which may not be renewed, would extend for a period of 2 years. During the interim approval period, the District would be protected from sanctions, and EPA would not be obligated to promulgate a federal permits program in Antelope Valley. Permits issued under a program with interim approval would have full standing with respect to part 70, and the 1-year time period for submittal of permit applications by subject sources would begin upon EPA's final rulemaking granting interim approval, as would the 3-year time period for processing initial permit applications.

Following final interim approval, if Antelope Valley should fail to submit a complete corrective program for full approval by the date 6 months before expiration of the interim approval, EPA would start an 18-month clock for mandatory sanctions. Then, if Antelope Valley should fail to submit a corrective program that EPA found complete before the expiration of that 18-month period, EPA would be required to apply one of the sanctions in section 179(b) of the Act, which would remain in effect until EPA determined that the District has corrected the deficiency by submitting a complete corrective program. If, six months after application of the first sanction, the Antelope Valley still had not submitted a corrective program that EPA found complete, a second sanction would be required.

If, following final interim approval, EPA were to disapprove Antelope Valley's complete corrective program, EPA would be required to apply one of the section 179(b) sanctions on the date 18 months after the effective date of the disapproval unless prior to that date the District submitted a revised program and EPA determined that it corrected the deficiencies that prompted the disapproval. Again, if, six months after EPA applied the first sanction, Antelope

Valley had not submitted a revised program that EPA determined corrected the deficiencies, a second sanction would be required. In addition, discretionary sanctions may be applied where warranted any time after the end of an interim approval period if a state or district has not submitted a timely and complete corrective program or EPA has disapproved a submitted corrective program. Moreover, if EPA has not granted full approval to a state or district program by the expiration of an interim approval, EPA must promulgate, administer and enforce a federal permits program for that state or district upon interim approval expiration.

2. Section 112(g) Implementation

EPA has decided that it is not reasonable to expect the states and districts to implement section 112(g) before a rule is issued. EPA therefore published an interpretive document in the **Federal Register** regarding section 112(g) of the Act: 60 FR 8333 (February 14, 1995). This document outlines EPA's revised interpretation of 112(g) applicability prior to EPA's issuing the final 112(g) rule. The document states that major source modifications, constructions, and reconstructions will not be subject to 112(g) requirements until the final rule is promulgated.

The document further explains that EPA is considering whether the effective date of section 112(g) should be delayed beyond the date of promulgation of the Federal rule so as to allow States and Districts time to adopt rules implementing the Federal rule, and that EPA will provide for any such additional delay in the final section 112(g) rulemaking. Unless and until EPA provides for such an additional postponement of section 112(g), Antelope Valley must be able to implement section 112(g) during the period between promulgation of the Federal section 112(g) rule and adoption of implementing District regulations. For this reason, EPA is proposing to approve the use of Antelope Valley's preconstruction review programs as a mechanism to implement section 112(g) during the transition period between promulgation of the section 112(g) rule and adoption by the nineteen districts of rules specifically designed to implement section 112(g). However, since approval is intended solely to confirm that Antelope Valley has a mechanism to implement section 112(g) during the transition period, the approval itself will be without effect if EPA decides in the final section 112(g) rule that there will be no transition period. The EPA is limiting the duration of its approval of the use of preconstruction programs to implement 112(g) to 12 months following promulgation by EPA of the section 112(g) rule.

3. Program for Delegation of Section 112 Standards as Promulgated

Requirements for part 70 program approval, specified in 40 CFR 70.4(b), encompass section 112(l)(5) requirements for approval of a program for delegation of section 112 standards as promulgated by EPA as they apply to part 70 sources. Section 112(l)(5) requires that the District's program contain adequate authorities, adequate resources for implementation, and an expeditious compliance schedule, which are also requirements under part 70. Therefore, the EPA is also proposing to grant approval under section 112(l)(5) and 40 CFR 63.91 of Antelope Valley's program for receiving delegation of section 112 standards that are unchanged from the federal standards as promulgated. California Health and Safety Code section 39658 provides for automatic adoption by CARB of section 112 standards upon promulgation by EPA. Section 39666 of the Health and Safety Code requires that districts then implement and enforce these standards. Thus, when section 112 standards are automatically adopted pursuant to section 39658, Antelope Valley will have the authority necessary to accept delegation of these standards without further regulatory action by the District.

4. State Operating Permit Program for Synthetic Minors

On March 31, 1995, CARB submitted for approval into the Antelope Valley's portion of the California State Implementation Plan (SIP) a local operating permit program designed to create federally enforceable limits on a source's potential to emit. This District program is referred to as a synthetic minor operating permit program, and it consists of regulations that will be integrated with the District's existing, non-federally enforceable, operating permit program. Such programs are also referred to as federally enforceable state operating permit (FESOP) programs. This synthetic minor or FESOP mechanism will allow sources to reduce their potential to emit to below the title V applicability thresholds and avoid being subject to title V.

Antelope Valley's synthetic minor regulations were adopted on March 17, 1998 and codified in Rule 225 (Federal Operating Permit Requirement). EPA found the initial SIP submittal administratively complete by default.

The five criteria for approving a state operating permit program into a SIP were set forth in the June 28, 1989 **Federal Register** notice (54 FR 27282): (1) The program must be submitted to and approved by EPA; (2) the program must impose a legal obligation on the operating permit holders to comply with the terms and conditions of the permit, and permits that do not conform with the June 28, 1989 criteria shall be deemed not federally enforceable; (3) the program must contain terms and conditions that are at least as stringent as any requirements contained in the SIP or enforceable under the SIP or any other section 112 or other Clean Air Act standard or requirement; (4) permits issued under the program must contain conditions that are permanent, quantifiable, and enforceable as a practical matter; and (5) permits issued under the program must be subject to public participation.

Permits issued under an approved program are federally enforceable and may be used to limit the potential to emit of sources of criteria pollutants. Antelope Valley's synthetic minor provisions of Rule 225 meet the June 28, 1989 criteria by ensuring that the limits will be permanent, quantifiable, and practically enforceable and by providing adequate notice and comment to EPA and the public. Therefore, EPA is proposing to approve, pursuant to part 52 and the approval criteria specified in the June 28, 1989 **Federal Register** notice, Rule 225 (Federal Operating Permit Requirement), which was submitted to create the synthetic minor operating permit program. Please refer to the Technical Support Document for a thorough analysis of the June 28, 1989 criteria as applied to the Antelope Valley's syntheticminor program.

On November 10, 1999, Antelope Valley requested approval of its synthetic minor program, consisting of the rule specified above, under section 112(l) of the Act for the purpose of creating federally enforceable limitations on the potential to emit of hazardous air pollutants (HAPs). The separate request for approval under section 112(l) is necessary because the proposed SIP approval discussed above only provides a mechanism for controlling criteria pollutants. While federally enforceable limits on criteria pollutants (*i.e.,* VOCs or PM–10) may have the incidental effect of limiting certain HAPs listed pursuant to section 112(b),[1] section 112 of the Act provides the underlying authority for controlling HAPs emissions that are not criteria pollutants. As a legal matter, no

[1] The EPA intends to issue guidance addressing the technical aspects of how these criteria pollutant limits may be recognized for purposes of limiting a source's potential to emit of HAPs to below section 112 major source levels.

additional program approval by EPA is required in order for these criteria pollutant limits to be recognized as federally enforceable. EPA has determined that the five approval criteria for approving FESOP programs into the SIP, as specified in the June 28, 1989 **Federal Register** notice, are also appropriate for evaluating and approving the programs under section 112(l). The June 28, 1989 notice does not address HAPs because it was written prior to the 1990 amendments to section 112 (which injected the concept of major HAPs sources versus non-major or area HAPs sources into the permit) and not because it establishes requirements unique to criteria pollutants. Hence, the five criteria outlined above are applicable to FESOP approvals under section 112(l).

In addition to meeting the criteria in the June 28, 1989 notice, a FESOP program that will control HAPs emissions must meet the statutory criteria for approval under section 112(l)(5). Section 112(l)(5) allows EPA to approve a program only if it: (l) contains adequate authority to assure compliance with any section 112 standard or requirement; (2) provides for adequate resources; (3) provides for an expeditious schedule for assuring compliance with section 112 requirements; and (4) is otherwise likely to satisfy the objectives of the Act.

The EPA plans to codify the approval criteria for programs limiting potential to emit of HAPs in subpart E of part 63 (subpart E), the regulations promulgated to implement section 112(l) of the Act. The EPA currently anticipates that these criteria, as they apply to FESOP programs controlling HAPs, will mirror those set forth in the June 28, 1989 document, with the addition that the state's authority must extend to all HAPs, instead of, or in addition to, VOCs and PM–10. The EPA currently anticipates that FESOP programs that are approved pursuant to section 112(l) prior to the subpart E revisions will have had to meet these criteria, and hence, will not be subject to any further approval action.

The EPA believes it has authority under section 112(l) to approve programs to limit potential to emit of HAPs directly under section 112(l) prior to this revision to subpart E. Section 112(l)(5) requires EPA to disapprove programs that are inconsistent with guidance required to be issued under section 112(l)(2). This might be read to suggest that the ''guidance'' referred to in section 112(l)(2) was intended to be a binding rule. Even under this interpretation, the EPA does not believe that section 112(l) requires this rulemaking to be comprehensive. That is, it need not address all instances of approval under section 112(l). Given the severe timing problems posed by impending deadlines set forth in MACT standards and for submittal of title V applications, EPA believes it is reasonable to read section 112(l) to allow for approval of programs to limit potential to emit prior to issuance of a rule specifically addressing this issue.

EPA proposes approval of Antelope Valley's synthetic minor program pursuant to section 112(l) because the program meets all of the approval criteria specified in the June 28, 1989 **Federal Register** notice and in section 112(l)(5) of the Act. Please refer to the Technical Support Document for a complete discussion of how the June 28, 1989 criteria are met by Antelope Valley. Regarding the statutory criteria of section 112(l)(5) referred to above, the EPA believes Antelope Valley's synthetic minor program contains adequate authority to assure compliance with section 112 requirements since the third criterion of the June 28, 1989 notice is met: The program does not provide for waiving any section 112 requirement. Sources would still be required to meet section 112 requirements applicable to non-major sources. Furthermore, EPA believes that Antelope Valley's synthetic minor program provides for an expeditious schedule for assuring compliance because it allows a source to establish a voluntary limit on potential to emit and avoid being subject to a federal Clean Air Act requirement applicable on a particular date. Nothing in Antelope Valley's program would allow a source to avoid or delay compliance with a federal requirement if it fails to obtain the appropriate federally enforceable limit by the relevant deadline. Finally, Antelope Valley's synthetic minor program is consistent with the objectives of the section 112 program because its purpose is to enable sources to obtain federally enforceable limits on potential to emit to avoid major source classification under section 112. The EPA believes this purpose is consistent with the overall intent of section 112, which is to decrease the amount of HAPs being emitted; by committing to stay below a certain emission level for HAPs, a source with a synthetic minor permit is achieving this goal.

III. Administrative Requirements

A. Request for Public Comments

The EPA is requesting comments on all aspects of this proposed interim approval. Copies of Antelope Valley's submittal and other information relied upon for the proposed interim approval are contained in a docket maintained at the EPA Regional Office. The docket is an organized and complete file of all the information submitted to, or otherwise considered by, EPA in the development of this proposed interim approval. The principal purposes of the docket are:

(1) To allow interested parties a means to identify and locate documents so that they can effectively participate in the approval process, and

(2) To serve as the record in case of judicial review. The EPA will consider any comments received by May 1, 2000.

B. Executive Order 12866

The Office of Management and Budget (OMB) has exempted this regulatory action from Executive Order 12866, Regulatory Planning and Review.

C. Executive Order 13132

Executive Order 13132, entitled Federalism (64 FR 43255, August 10, 1999), revokes and replaces Executive Orders 12612, Federalism, and 12875, Enhancing the Intergovernmental Partnership. Executive Order 13132 requires EPA to develop an accountable process to ensure ''meaningful and timely input by State and local officials in the development of regulatory policies that have federalism implications.'' ''Policies that have federalism implications'' is defined in the Executive Order to include regulations that have ''substantial direct effects on the States, on the relationship between the national government and the States, or on the distribution of power and responsibilities among the various levels of government.'' Under Executive Order 13132, EPA may not issue a regulation that has federalism implications, that imposes substantial direct compliance costs, and that is not required by statute, unless the Federal government provides the funds necessary to pay the direct compliance costs incurred by State and local governments, or EPA consults with State and local officials early in the process of developing the proposed regulation. EPA also may not issue a regulation that has federalism implications and that preempts State law unless the Agency consults with State and local officials early in the process of developing the proposed regulation.

This proposed rule will not have substantial direct effects on the States, on the relationship between the national government and the States, or on the distribution of power and responsibilities among the various levels of government, as specified in Executive Order 13132 (64 FR 43255,

August 10, 1999), because it merely approves a state rule implementing a federal standard, and does not alter the relationship or the distribution of power and responsibilities established in the Clean Air Act. Thus, the requirements of section 6 of the Executive Order do not apply to this rule.

D. Executive Order 13045

Protection of Children from Environmental Health Risks and Safety Risks (62 FR 19885, April 23, 1997), applies to any rule that: (1) is determined to be ''economically significant'' as defined under Executive Order 12866, and (2) concerns an environmental health or safety risk that EPA has reason to believe may have a disproportionate effect on children. If the regulatory action meets both criteria, the Agency must evaluate the environmental health or safety effects of the planned rule on children, and explain why the planned regulation is preferable to other potentially effective and reasonably feasible alternatives considered by the Agency. This rule is not subject to Executive Order 13045 because it is does not involve decisions intended to mitigate environmental health or safety risks.

E. Executive Order 13084

Under Executive Order 13084, Consultation and Coordination with Indian Tribal Governments, EPA may not issue a regulation that is not required by statute, that significantly or uniquely affects the communities of Indian tribal governments, and that imposes substantial direct compliance costs on those communities, unless the Federal government provides the funds necessary to pay the direct compliance costs incurred by the tribal governments, or EPA consults with those governments. If EPA complies by consulting, Executive Order 13084 requires EPA to provide to the Office of Management and Budget, in a separately identified section of the preamble to the rule, a description of the extent of EPA's prior consultation with representatives of affected tribal governments, a summary of the nature of their concerns, and a statement supporting the need to issue the regulation. In addition, Executive Order 13084 requires EPA to develop an effective process permitting elected officials and other representatives of Indian tribal governments ''to provide meaningful and timely input in the development of regulatory policies on matters that significantly or uniquely affect their communities.'' Today's rule does not significantly or uniquely affect the communities of Indian tribal governments. Accordingly, the requirements of section 3(b) of Executive Order 13084 do not apply to this rule.

F. Regulatory Flexibility Act

The Regulatory Flexibility Act (RFA) generally requires an agency to conduct a regulatory flexibility analysis of any rule subject to notice and comment rulemaking requirements unless the agency certifies that the rule will not have a significant economic impact on a substantial number of small entities. Small entities include small businesses, small not-for-profit enterprises, and small governmental jurisdictions. This final rule will not have a significant impact on a substantial number of small entities because SIP approvals under section 110 and subchapter I, part D of the Clean Air Act do not create any new requirements but simply approve requirements that the State is already imposing. Therefore, because the Federal SIP approval does not create any new requirements, I certify that this action will not have a significant economic impact on a substantial number of small entities. Moreover, due to the nature of the Federal-State relationship under the Clean Air Act, preparation of flexibility analysis would constitute Federal inquiry into the economic reasonableness of state action. The Clean Air Act forbids EPA to base its actions concerning SIPs on such grounds. *Union Electric Co.,* v. *U.S. EPA,* 427 U.S. 246, 255–66 (1976); 42 U.S.C. 7410(a)(2).

G. Unfunded Mandates

Under section 202 of the Unfunded Mandates Reform Act of 1995 (''Unfunded Mandates Act''), signed into law on March 22, 1995, EPA must prepare a budgetary impact statement to accompany any proposed or final rule that includes a Federal mandate that may result in estimated annual costs to State, local, or tribal governments in the aggregate; or to private sector, of $100 million or more. Under section 205, EPA must select the most cost-effective and least burdensome alternative that achieves the objectives of the rule and is consistent with statutory requirements. Section 203 requires EPA to establish a plan for informing and advising any small governments that may be significantly or uniquely impacted by the rule.

EPA has determined that the approval action promulgated does not include a Federal mandate that may result in estimated annual costs of $100 million or more to either State, local, or tribal governments in the aggregate, or to the private sector. This Federal action approves pre-existing requirements under State or local law, and imposes no new requirements. Accordingly, no additional costs to State, local, or tribal governments, or to the private sector, result from this action.

List of Subjects

40 CFR Part 52

Environmental protection, Air pollution control, Carbon monoxide, Hydrocarbons, Intergovernmental relations, Lead, Nitrogen dioxide, Ozone, Particulate matter, Reporting and recordkeeping requirements, Sulfur oxides, Volatile organic compounds.

40 CFR Part 70

Environmental protection, Administrative practice and procedure, Air pollution control, Hazardous substances, Intergovernmental relations, Operating permits, Reporting and recordkeeping requirements.

Authority: 42 U.S.C. 7401–7671q.

Dated: March 17, 2000.

Laura Yoshii,

Acting Regional Administrator, Acting Region IX.

[FR Doc. 00–7999 Filed 3–30–00; 8:45 am]

BILLING CODE 6560–50–P

ENVIRONMENTAL PROTECTION AGENCY

40 CFR Part 180

[OPP–300985; FRL–6497–7]

RIN 2070–AB78

Fenthion, Methidathion, Naled, Phorate, and Profenofos; Proposed Revocation of Tolerances

AGENCY: Environmental Protection Agency (EPA).

ACTION: Proposed rule.

SUMMARY: EPA is proposing to revoke 67 meat, milk, poultry, and egg tolerances for residues of the organophosphate pesticides fenthion, methidathion, naled, phorate, and profenofos. EPA determined that there are no reasonable expectations of finite residues in or on meat, milk, poultry, or eggs for the aforementioned organophosphate pesticides and announced on August 2, 1999, that those tolerances were reassessed under the Federal Food, Drug, and Cosmetic Act (FFDCA). The regulatory actions proposed in this document are part of the Agency's reregistration program under the Federal Insecticide, Fungicide, and Rodenticide Act (FIFRA), and the tolerance reassessment requirements of the FFDCA. By law, EPA is required to

reassess 66% of the tolerances in existence on August 2, 1996, by August 2002, or about 6,400 tolerances. Since those 67 tolerances were previously reassessed, those reassessments were counted at that time. Consequently, no reassessments are counted here toward the August 2002 review deadline of FFDCA section 408(q), as amended by the Food Quality Protection Act (FQPA) of 1996.

DATES: Comments, identified by docket control number OPP–300985, must be received on or before May 30, 2000.

ADDRESSES: Comments may be submitted by mail, electronically, or in person. Please follow the detailed instructions for each method as provided in Unit I. of **SUPPLEMENTARY INFORMATION.** To ensure proper receipt by EPA, it is imperative that you identify docket control number OPP–300985 in the subject line on the first page of your response.

FOR FURTHER INFORMATION CONTACT: By mail: Dan Helfgott, Special Review and Reregistration Division (7508C), Office of Pesticide Programs, Environmental Protection Agency, Ariel Rios Bldg., 1200 Pennsylvania Ave., NW., Washington, DC 20460; telephone number: (703) 308–8054; fax number: (703) 308–8041; e-mail address: helfgott.daniel@epa.gov.

SUPPLEMENTARY INFORMATION:

I. General Information

A. Does This Action Apply to Me?

You may be potentially affected by this action if you are an agricultural producer, food manufacturer or pesticide manufacturer. Potentially affected categories and entities may include, but are not limited to:

Categories	NAICS codes	Examples of potentially affected entities
Industry	111 112 311 32532	Crop production Animal production Food manufacturing Pesticide manufacturing

This listing is not intended to be exhaustive, but rather provides a guide for readers regarding entities likely to be affected by this action. Other types of entities not listed in this table could also be affected. The North American Industrial Classification System (NAICS) codes are provided to assist you and others in determining whether or not this action might apply to certain entities. If you have questions regarding the applicability of this action to a particular entity, consult the person listed under **FOR FURTHER INFORMATION CONTACT.**

B. How Can I Get Additional Information, Including Copies of This Document and Other Related Documents?

1. *Electronically.* You may obtain electronic copies of this document, and certain other related documents that might be available electronically, from the EPA Internet Home Page at http://www.epa.gov/. To access this document, on the Home Page select ''Laws and Regulations'' and then look up the entry for this document under the ''**Federal Register**—Environmental Documents.'' You can also go directly to the **Federal Register** listings at http://www.epa.gov/fedrgstr/.

2. *In person.* The Agency has established an official record for this action under docket control number OPP–300985. The official record consists of the documents specifically referenced in this action, any public comments received during an applicable comment period, and other information related to this action, including any information claimed as Confidential Business Information (CBI). This official record includes the documents that are physically located in the docket, as well as the documents that are referenced in those documents. The public version of the official record does not include any information claimed as CBI. The public version of the official record, which includes printed, paper versions of any electronic comments submitted during an applicable comment period, is available for inspection in the Public Information and Records Integrity Branch (PIRIB), Rm. 119, Crystal Mall #2, 1921 Jefferson Davis Hwy., Arlington, VA, from 8:30 a.m. to 4 p.m., Monday through Friday, excluding legal holidays. The PIRIB telephone number is (703) 305–5805.

C. How and to Whom Do I Submit Comments?

You may submit comments through the mail, in person, or electronically. To ensure proper receipt by EPA, it is imperative that you identify docket control number OPP–300985 in the subject line on the first page of your response.

1. *By mail.* Submit your comments to: Public Information and Records Integrity Branch (PIRIB), Information Resources and Services Division (7502C), Office of Pesticide Programs (OPP), Environmental Protection Agency, Ariel Rios Bldg., 1200 Pennsylvania Ave., NW., Washington, DC 20460.

2. *In person or by courier.* Deliver your comments to: Public Information and Records Integrity Branch (PIRIB), Information Resources and Services Division (7502C), Office of Pesticide Programs (OPP), Environmental Protection Agency, Rm. 119, Crystal Mall #2, 1921 Jefferson Davis Hwy., Arlington, VA. The PIRIB is open from 8:30 a.m. to 4 p.m., Monday through Friday, excluding legal holidays. The PIRIB telephone number is (703) 305–5805.

3. *Electronically.* You may submit your comments electronically by e-mail to: ''opp-docket@epa.gov,'' or you can submit a computer disk as described above. Do not submit any information electronically that you consider to be CBI. Avoid the use of special characters and any form of encryption. Electronic submissions will be accepted in WordPerfect 6.1/8.0 or ASCII file format. All comments in electronic form must be identified by docket control number OPP–300985. Electronic comments may also be filed online at many Federal Depository Libraries.

D. How Should I Handle CBI That I Want to Submit to the Agency?

Do not submit any information electronically that you consider to be CBI. You may claim information that you submit to EPA in response to this document as CBI by marking any part or all of that information as CBI. Information so marked will not be disclosed except in accordance with procedures set forth in 40 CFR part 2. In addition to one complete version of the comment that includes any information claimed as CBI, a copy of the comment that does not contain the information claimed as CBI must be submitted for inclusion in the public version of the official record. Information not marked confidential will be included in the public version of the official record without prior notice. If you have any questions about CBI or the procedures for claiming CBI, please consult the person listed under **FOR FURTHER INFORMATION CONTACT.**

E. What Should I Consider as I Prepare My Comments for EPA?

You may find the following suggestions helpful for preparing your comments:

1. Explain your views as clearly as possible.

2. Describe any assumptions that you used.

3. Provide copies of any technical information and/or data you used that support your views.

4. If you estimate potential burden or costs, explain how you arrived at the estimate that you provide.

5. Provide specific examples to illustrate your concerns.

6. Offer alternative ways to improve the proposed rule or collection activity.

7. Make sure to submit your comments by the deadline in this document.

8. To ensure proper receipt by EPA, be sure to identify the docket control number assigned to this action in the subject line on the first page of your response. You may also provide the name, date, and **Federal Register** citation.

II. Background

A. What Action Is the Agency Taking?

EPA is proposing to revoke specific meat, milk, poultry and egg tolerances for residues of fenthion, methidathion, naled, phorate, and profenofos because the Agency has concluded that there is no reasonable expectation of finite residues in or on the commodities associated with those tolerances.

The determinations to revoke the tolerances listed in this document were made based on feeding studies submitted since the time that the tolerances were originally established. These feeding studies used exaggerated amounts of the compound (10x the dietary burden) and did not show measurable residues of the pesticides tested. Because there is no reasonable expectation of finite residues, these 67 tolerances are not required under the FFDCA and can be revoked. The Agency originally made the determination that there is no reasonable expectation of finite residues on fenthion, methidathion, naled, phorate, or profenophos for the 67 commodities listed below on July 11, 1999. EPA published a notice in the **Federal Register** on August 2, 1999 (64 FR 41933) (FRL–6097–3) that these 67 tolerances were considered reassessed and had already been counted toward meeting the tolerance reassessment requirements listed in FFDCA section 408(q).

1. *Fenthion*. EPA is proposing to revoke the tolerances in 40 CFR 180.214 for residues of fenthion in or on poultry, fat; poultry, meat byproducts (mbyp); and poultry, meat. In 40 CFR 180.214, EPA is also proposing to remove the ''N'' designation from all entries to conform to current Agency administrative practice (''N'' designation means negligible residues).

2. *Methidathion*. EPA is proposing to revoke the tolerances in 40 CFR 180.298 for residues of methidathion in or on cattle, fat; cattle, mbyp; cattle, meat; goats, fat; goats, mbyp; goats, meat; hogs, fat; hogs, mbyp; hogs, meat; horses, fat; horses, mbyp; horses, meat; poultry, fat; poultry, mbyp; poultry, meat; sheep, fat; sheep, mbyp; sheep, meat; milk; and eggs. In 40 CFR 180.298, EPA is also proposing to remove the ''N'' designation from all entries to conform to current Agency administrative practice.

3. *Naled*. EPA is proposing to revoke the tolerances in 40 CFR 180.215 for residues of naled in or on cattle, fat; cattle, mbyp; cattle, meat; goats, fat; goats, mbyp; goats, meat; hogs, fat; hogs, mbyp; hogs, meat; horses, fat; horses, mbyp; horses, meat; poultry, fat; poultry, mbyp; poultry, meat; sheep, fat; sheep, mbyp; sheep, meat; milk; and eggs.

4. *Phorate*. EPA is proposing to revoke the tolerances in 40 CFR 180.206 for residues of phorate in or on cattle, fat; cattle, mbyp; cattle, meat; goats, fat; goats, mbyp; goats, meat; hogs, fat; hogs, mbyp; hogs, meat; horses, fat; horses, mbyp; horses, meat; poultry, fat; poultry, mbyp; poultry, meat; sheep, fat; sheep, mbyp; sheep, meat; milk; and eggs.

5. *Profenofos*. EPA is proposing to revoke the tolerances in 40 CFR 180.404 for residues of profenofos in or on poultry, fat; poultry, mbyp; poultry, meat; and eggs.

B. What Is the Agency's Authority for Taking This Action?

A ''tolerance'' represents the maximum level for residues of pesticide chemicals legally allowed in or on raw agricultural commodities and processed foods. Section 408 of FFDCA, 21 U.S.C. 301 *et seq.*, as amended by the FQPA of 1996, Public Law 104–170, authorizes the establishment of tolerances, exemptions from tolerance requirements, modifications in tolerances, and revocation of tolerances for residues of pesticide chemicals in or on raw agricultural commodities and processed foods (21 U.S.C. 346(a)). Without a tolerance or exemption, food containing pesticide residues is considered to be unsafe and therefore ''adulterated'' under section 402(a) of the FFDCA. If food containing pesticide residues is considered to be ''adulterated,'' you may not distribute the product in interstate commerce (21 U.S.C. 331(a) and 342(a)). For a food-use pesticide to be sold and distributed, the pesticide must be registered under FIFRA (7 U.S.C. *et seq.*) Food-use pesticides not registered in the United States have tolerances for residues of pesticides in or on commodities imported into the United States.

When EPA establishes tolerances for pesticide residues in or on raw agricultural commodities, consideration must be given to the possible residues of those chemicals in meat, milk, poultry, and/or eggs produced by animals that are fed agricultural products (for example, grain or hay) containing pesticide residues (40 CFR 180.6). When considering this possibility, EPA can conclude that:

1. Finite residues will exist in meat, milk, poultry and/or eggs.

2. There is a reasonable expectation that finite residues will exist.

3. There is a reasonable expectation that finite residues will not exist. If there is no reasonable expectation of finite pesticide residues in or on meat, milk, poultry, or eggs, tolerances do not need to be established for these commodities (40 CFR 180.6(b) and 40 CFR 180.6(c)).

EPA has evaluated the meat, milk, poultry, and egg tolerances listed in the table in this proposed rule and has concluded that there is no reasonable expectation of finite residues of the listed organophosphate pesticides in or on those commodities.

C. When Do These Actions Become Effective?

EPA is proposing that these actions become effective 90 days following publication of a final rule in the **Federal Register**. EPA has proposed delaying the effectiveness of these revocations for 90 days following the publication of a final rule to ensure that all affected parties receive notice of EPA's actions. If you have comments regarding the effective date, please submit comments as described under the **SUPPLEMENTARY INFORMATION** section of this document.

D. What Is the Contribution to Tolerance Reassessment?

By law, EPA is required to reassess 66% or about 6,400 of the tolerances in existence on August 2, 1996, by August 2002. EPA is also required to assess the remaining tolerances by August 2006. As of February 1, 2000, EPA has reassessed 3,430 tolerances. While this document proposes to revoke 67 tolerances, those 67 tolerances have been previously counted as reassessed and none are counted here toward the August 2002 review deadline of FFDCA section 408(q), as amended by FQPA in 1996.

III. Are the Proposed Actions Consistent With International Obligations?

The tolerance revocations in this proposal are not discriminatory. EPA has evaluated the meat, milk, poultry,

and egg tolerances listed in the table in the regulatory text and has concluded that there is no reasonable expectation of finite residues of the listed organophosphate pesticides in or on those commodities, whether domestic or imported.

EPA is working to ensure that the U.S. tolerance reassessment program under FQPA does not disrupt international trade. EPA considers Codex Maximum Residue Limits (MRLs) in setting U.S. tolerances and in reassessing them. MRLs are established by the Codex Committee on Pesticide Residues, a committee within the Codex Alimentarius Commission, an international organization formed to promote the coordination of international food standards. It is EPA's policy to harmonize U.S. tolerances with Codex MRLs to the extent possible, provided that the MRLs achieve the level of protection required under FFDCA. EPA's effort to harmonize with Codex MRLs is summarized in the tolerance reassessment section of individual Reregistration Eligibility Decision documents.

IV. How Do the Regulatory Assessments Requirements Apply to This Action?

In this document, EPA is proposing to revoke specific meat, milk, poultry, and egg tolerances established under FFDCA section 408. The Office of Management and Budget (OMB) has exempted this type of action, i.e., a tolerance revocation for which extraordinary circumstances do not exist, from review under Executive Order 12866, entitled *Regulatory Planning and Review* (58 FR 51735, October 4, 1993). This action does not contain any information collections subject to OMB approval under the Paperwork Reduction Act (PRA), 44 U.S.C. 3501 *et seq.*, or impose any enforceable duty or contain any unfunded mandate as described under Title II of the Unfunded Mandates Reform Act of 1995 (UMRA) (Public Law 104–4). Nor does it require any prior consultation as specified by Executive Order 13084, entitled *Consultation and Coordination with Indian Tribal Governments* (63 FR 27655, May 19, 1998); special considerations as required by Executive Order 12898, entitled *Federal Actions to Address Environmental Justice in Minority Populations and Low-Income Populations* (59 FR 7629, February 16, 1994); or require OMB review or any Agency action under Executive Order 13045, entitled *Protection of Children from Environmental Health Risks and Safety Risks* (62 FR 19885, April 23, 1997). This action does not involve any technical standards that would require Agency consideration of voluntary consensus standards pursuant to section 12(d) of the National Technology Transfer and Advancement Act of 1995 (NTTAA), Public Law 104–113, section 12(d) (15 U.S.C. 272 note). Pursuant to the Regulatory Flexibility Act (RFA) (5 U.S.C. 601 *et seq.*), the Agency previously assessed whether revocations of tolerances might significantly impact a substantial number of small entities and concluded that, as a general matter, these actions do not impose a significant economic impact on a substantial number of small entities. The factual basis and the Agency's certification under section 605(b) for tolerance revocations published on December 17, 1997 (62 FR 66020), and was provided to the Chief Counsel for Advocacy of the Small Business Administration. Since no extraordinary circumstances exist as to the present revocation that would change EPA's previous analysis, the Agency is able to reference the general certification. Any comments about the Agency's determination should be submitted to EPA along with comments on the proposal, and will be addressed prior to issuing a final rule.

In addition, the Agency has determined that this action will not have a substantial direct effect on States, on the relationship between the national government and the States, or on the distribution of power and responsibilities among the various levels of government, as specified in Executive Order 13132, entitled *Federalism* (64 FR 43255, August 10, 1999). Executive Order 13132 requires EPA to develop an accountable process to ensure ''meaningful and timely input by State and local officials in the development of regulatory policies that have federalism implications.'' ''Policies that have federalism implications'' is defined in the Executive Order to include regulations that have ''substantial direct effects on the States, on the relationship between the national government and the States, or on the distribution of power and responsibilities among the various levels of government.'' This rule directly regulates growers, food processors, food handlers and food retailers, not States. This action does not alter the relationships or distribution of power and responsibilities established by Congress in the preemption provisions of FFDCA section 408(n)(4).

List of Subjects in 40 CFR Part 180

Environmental protection, Administrative practice and procedure, Agricultural commodities, Pesticides and pests, Reporting and recordkeeping requirements.

Dated: March 23, 2000.

Jack E. Housenger, Acting

Director, Special Review and Reregistration Division, Office of Pesticide Programs.

Therefore, it is proposed that 40 CFR part 180 be amended as follows:

PART 180—[AMENDED]

1. The authority citation for part 180 continues to read as follows:

Authority: 21 U.S.C. 321(q), 346a and 371.

§ 180.206 [Amended]

2. In § 180.206, by removing from the table in paragraph (a) the entries for cattle, fat; cattle, mbyp; cattle, meat; eggs; goats, fat; goats, mbyp; goats, meat; hogs, fat; hogs, mbyp; hogs, meat; horses, fat; horses, mbyp; horses, meat; milk (negligible residue); poultry, fat; poultry, mbyp; poultry, meat; sheep, fat; sheep, mbyp; and sheep, meat.

§ 180.214 [Amended]

3. In § 180.214, by removing the entries for poultry, fat; poultry, mbyp; and poultry, meat; and by removing the ''(N)'' designation from the entry ''milk'' in the table under paragraph (a).

§ 180.215 [Amended]

4. In § 180.215, by removing from the table in paragraph (a) the entries for cattle fat; cattle, mbyp; cattle, meat; eggs; goats, fat; goats, mbyp; goats, meat; hogs, fat; hogs, mbyp; hogs, meat; horses, fat; horses, mbyp; horses, meat; milk; poultry, fat; poultry, mbyp; poultry, meat; sheep, fat; sheep, mbyp; and sheep, meat.

§ 180.298 [Amended]

5. In § 180.298, by removing paragraph (a)(2), and redesignating paragraph (a)(1) as (a), and by removing the ''(N)'' designation wherever it appears from any entry in the table under paragraph (a).

§ 180.404 [Amended]

6. In § 180.404, by removing the entries for poultry, fat; poultry, mbyp; poultry, meat; and eggs; and redesignating the existing paragraph as paragraph (a) and adding and reserving paragraphs (b), (c), and (d) to read as follows:

(b) *Section 18 emergency exemptions.* [Reserved]

(c) *Tolerances with regional registrations.* [Reserved]

(d) *Indirect or inadvertent residues.* [Reserved]

[FR Doc. 00–8001 Filed 3–30–00; 8:45 am]

BILLING CODE 6560–50–F

ENVIRONMENTAL PROTECTION AGENCY

40 CFR Part 228

[FRL–6567–7]

Ocean Dumping; Proposed Designation of Site

AGENCY: Environmental Protection Agency (EPA).

ACTION: Proposed rule.

SUMMARY: EPA today proposes to designate an ocean dredged material disposal site located offshore of Coos Bay, Oregon, for the disposal of dredged material removed from the federal navigation project at Coos Bay, Oregon, and for materials dredged during other actions authorized by, and in accordance with, section 103 of the Marine Protection, Research, and Sanctuaries Act of 1972 (MPRSA). This action is necessary to provide a acceptable ocean dumping site for the current and future disposal of this dredged material. This proposed site designation is for an indefinite period of time, but the site is subject to continuing monitoring to insure that unacceptable, adverse environmental impacts do not occur.

DATES: Comments must be received on or before May 15, 2000.

ADDRESSES: Comments on this proposed rule should be sent to: John Malek, Dredging and Ocean Dumping Coordinator, EPA Region 10 MS: ECO–083, 1200 Sixth Avenue, Seattle, WA 98101.

The file supporting this proposed designation is available for public inspection at the following locations:

EPA Public Information Reference Unit (PIRU), Room 2904 (rear), 401 M Street Southwest, Washington, DC.

EPA Region 10, 1200 Sixth Avenue, Seattle, Washington 98101.

U.S. Army Corps of Engineers, Northwestern Division, U.S. Customs House, 220 Northwest Eighth, Portland, Oregon.

U.S. Army Corps of Engineers, Portland District, Robert Duncan Plaza, 333 S.W. First Avenue, Portland, Oregon.

FOR FURTHER INFORMATION CONTACT: John Malek, Ocean Dumping Coordinator, U.S. Environmental Agency, Region X (ECO–083), 1200 Sixth Avenue, Seattle, WA 98191–1128, telephone (206) 553–1286, e-mail malek.john@epa.gov.

SUPPLEMENTARY INFORMATION:

A. Background

Section 102(c) of the Marine Protection, Research, and Sanctuaries Act of 1972 (MPRSA), as amended, 33 U.S.C. 1403 *et seq.*, gives the Administrator the authority to designate sites where ocean dumping may be permitted. On October 1, 1986, the Administrator delegated the authority to designate ocean dumping sites to the Regional Administrator of the Region in which the site is located. This site designation is being made persuant to that authority.

The EPA Ocean Dumping Regulations (40 CFR Chapter I, subchapter H, section § 228.4) state that ocean dumping sites will be designated by publication in part 228. A list of ''Approved and Final Ocean Dumping Sites'' was published on January 11, 1977 (42 FR 2461 *et seq.*) and was last updated on July 1, 1999 (40 CFR 228.15(n)(2), (n)(3), and (n)(4)). A total of three ocean dumping sites off of Coos Bay (Site E, Site F, and site H) were designated in 1986 (51 FR 29927 *et seq.*). This proposed rule designates a new Site F which incorporates the 1986-designated Site F but appreciably expands it. Interested persons may participate in this proposed rulemaking by submitting written comments within 45 days of the date of this publication to the address given above.

B. EIS Development

Section 102(c) of the National Environmental Policy Act of 1969, 42 U.S.C. 4321 *et seq.*, (NEPA) requires that Federal agencies prepare an Environmental Impact Statement (EIS) on proposals for legislation and other major Federal actions significantly affecting the quality of the human environment. The object of NEPA is to build into agency decision-making processes careful consideration of all environmental aspects of proposed actions.

The U.S. Army Corps of Engineers (Corps) has prepared the *Feasibility Report on Navigation Improvements with Environmental Impact Statement (1994)* (Channel Deepening) for Coos Bay, Oregon, with the EPA Region 10 as a cooperating agency in the EIS preparation. The action discussed in the EIS is the designation of a larger Site F for ocean disposal of dredged material. The other two sites (E and H) are not affected by this rule. The purpose of the designation is to provide an environmentally acceptable location for ocean disposal of dredged material. The appropriateness of ocean disposal is determined on a case-by-case basis as part of the process of issuing permits for ocean disposal.

Existing Site F was designated in 1986 and in 1989 the area available for disposal of dredged material was doubled by the Corps using its section 103 authority of the MPRSA. The expansion was to the north to prevent excessive mounding and to reduce potential sediment transport back into the entrance channel. In 1995 Site F was again expanded by the Corps in order to accommodate less than anticipated sediment dispersion and to prevent excessive mounding. The size and location of Site F herein proposed for final designation is the same as that established by the Corps 103 action in 1995.

The EIS provides documentation to support final designation of a larger Site F as an ocean dredged material disposal site (ODMDS) for continuing use. Site designation studies were conducted by the Portland District, Corps of Engineers, in consultation with EPA, Region 10. The ODMDS site proposed for designation is located in the area best suited for dredged material disposal in terms of environmental and navigational safety factors. No significant or long-term adverse environmental effects are predicted to result from the designation. The designated ODMDS would continue to receive sediments dredged by the Corps to maintain the federally authorized navigation project at Coos Bay, Oregon, and for disposal of material dredged during other actions authorized in accordance with section 103 of the MPRSA. Before any disposal may occur, a specific evaluation by the Corps must be made using EPA's ocean dumping criteria. EPA makes an independent evaluation of the proposal and can disapprove the actual disposal.

The studies and final designation process are being conducted in accordance with the MPRSA, the Ocean Dumping Regulations, and other applicable federal environmental legislation.

C. Proposed Site Description

The center of the proposed site is located approximately 1.6 miles offshore with an east-west site dimension of 14,500 feet and a north-south site dimension of 8,000 feet (Figure 1.) The coordinates of the site are as follows (NAD 83):

43°22'58'' N, 124°19'32'' W
43°21'50'' N, 124°20'29'' W
43°22'52'' N, 124°23'28'' W
43°23'59'' N, 124°22'31'' W

If at any time disposal operations at the site cause unacceptable adverse impacts, further use of the site will be restricted or terminated.

D. Regulatory Requirements

Five general criteria are used in the selection and approval of ocean disposal sites for continuing use. Sites are

selected so as to minimize interference with other marine activities, to keep any temporary perturbations from the dumping from causing impacts outside the disposal site, and to permit effective monitoring to detect any adverse impacts at an early stage. Where feasible, locations off the Continental Shelf are chosen. If at any time disposal operations at a site cause unacceptable adverse impacts, the use of that site will be terminated as soon as suitable alternate sites can be designated. The general criteria are given in 40 CFR 228.5 of the EPA Ocean Dumping Regulations. Eleven specific criteria, given in 40 CFR 228.6, are used in evaluating a proposed disposal site to assure that the general criteria are met. The evaluations of the general and specific criteria, given below, are based on information published in the site designation EIS, monitoring studies, and the Channel Deepening EIS.

General Criteria (40 CFR 228.5)

1. Minimal Interference With Other Activities

The location of proposed ODMDS F is based on reasonable distance from the Coos Bay entrance, depth of water, biological conditions, historical use, and estimated amount and type of dredged material. Disposal activities are not expected to result in more than minimal interference with the typical marine activities such as navigation and commercial and recreational fishing. Use of the nearshore portion could conflict with crab fishing, but timing of disposal to occur after the season closes minimizes interference.

2. Minimize Changes in Water Quality

The material to be disposed consists of clean sand and silt. As described in the EIS, sediment test results indicate this material is suitable for ocean disposal. Testing and evaluation of material proposed for disposal would occur as necessary to insure suitability.

3. Interim Sites Which Do Not Meet Criteria

Not applicable; the existing Site F was designated on an interim basis in 1977 and received final designation status in 1986. The site did not have sufficient capacity to meet long-term need without mounding, leading to the need for an expanded site.

4. Size of Sites

The size of the designated Site F has proven to be inadequate. By the Corps' Section 103 authority, Site F was twice expanded (1989 and 1995) to its presently proposed dimensions to limit mound development caused by inadequate sediment dispersion. The enlarged Site F proposed for designation is anticipated to adequately accommodate disposal of current and future maintenance dredging by using a larger placement area and by using the more active nearshore dispersal areas.

5. Sites Off the Continental Shelf

Such sites were eliminated during site evaluation for the 1986 site designation EIS. Conditions have not changed to offer any environmental advantage to the use of a site off the continental shelf. Transportation costs, sampling and testing costs, and post-disposal monitoring costs associated with disposal at a continental shelf site would greatly increase over present costs. In addition, there is greater uncertainty over impacts associated with continental shelf disposal, compared to disposal at existing sites which are known low impact areas. Therefore, disposal at a site off the continental shelf is not considered necessary or practical.

Transporting dredged material off the continental shelf presents potentially significant environmental concerns. Benthic and pelagic ecosystems near the shelf contain important fishery resources and the effects of disposal operations on them are not well understood. Fine-grained sediment and rocky habitats would be directly impacted by disposal. These deep-water areas are stable and generally not disturbed by wave action or sediment movement. Consequently, the benthic invertebrate communities in these deep, offshore environments are adapted to very stable conditions and would be less able to survive disturbance from the immediate impact of disposal and the long-term alteration of substrate type. Little is known of the ecology of benthic communities on the continental slope; however, disposal onto those communities would cause severe and long-term impacts. Bottom gradients can be 5 to 25 percent on the continental slope, making accumulated unconsolidated sediments susceptible to slumping. Deposited sediments could be transported long distances downslope as turbidity currents and offshore by near-bottom currents, potentially affecting organisms outside of any designated site.

The cost for site evaluation necessary to designate a site and subsequent baseline and monitoring, along with unanswered environmental concerns about the effects of disposal in such areas, makes off-shelf disposal undesirable as well as infeasible. Further, disposal off the continental shelf would remove natural sediments from the nearshore littoral transport system, a system that functions with largely non-renewable quantities of sand.

Specific Criteria (40 CFR 228.6)

1. Geographical Position, Depth of Water, Bottom Topography, and Distance From Coast

The proposed site lies in 20 to 160 feet (6 to 51 m) of water, approximately 1.6 miles offshore with an east-west dimension of 14,500 feet and a north-south dimension of 8,000 feet. Coordinates are (NAD 83):

43°22'58'' N, 124°19'32'' W
43°21'50'' N, 124°20'29'' W
43°22'52'' N, 124°23'28'' W
43°23'59'' N, 124°22'31'' W

In general, bottom contours of the proposed site slope at a rate of 10/1000 feet to the WNW.

Sediments in proposed Site F and adjoining areas are clean fine sands of marine origin with median grain diameters of 0.15 to 0.20 millimeters.

2. Location in Relation to Breeding, Spawning, Nursery, Feeding, or Passage Area of Living Resources in Adult and Juvenile Phases

Aquatic resources of the proposed Site F are described in detail in the EISs (1986, 1994). The inshore high-dispersive area (depth to 15 meters) are populated by species tolerant of a high energy wave environment that are adapted to continued disturbance. Deeper areas are generally less dispersive and are populated by species generally less adapted to continued disturbance. Most organisms display seasonal changes of abundance typical of coastal Oregon and Pacific Northwest waters.

Based on analyses of benthic samples, proposed Site F and vicinity contains benthic fauna characteristic of oceanic coastal Pacific Northwest environs. By utilizing the more dispersive shallower areas and, when appropriate, deeper areas of the proposed site, the disturbance or burial of benthic organisms would be minimized. Various management options described in the site Management and Monitoring plan (SMMP) over a larger site area would further avoid or minimize these impacts. Most organisms and communities which are adapted to a higher energy environment tend to recolonize quickly following the disposal operation. No unique biological communities would be impacted.

The dominant commercially and recreationally important macroinvertebrate species in the coastal area are shellfish, Dungeness crab and

shrimp. A variety of demersal and pelagic fish species are present. Common demersal fish are flatfish, sole, and smelt. Anadromous salmon, herring, and anchovy are representative of pelagic fishes present in the coastal waters.

The proposed Site F is in an area where numerous species of birds and marine animals occur in the pelagic nearshore and shoreline habitats.

In summary, the proposed ODMDS contains living resources that could be affected by disposal activities. However, evaluation of past disposal activities does not indicate that unacceptable adverse effects to these resources have occurred. Appropriate future management should minimize the potential of adverse impacts and make this proposed site acceptable for final designation.

3. Location in Relation to Beaches and Other Amenity Areas

The nearshore limit of proposed Site F is located within 2000 feet of the shoreline. Sediments disposed near that site boundary would be in an active transport zone and would disperse rapidly both onshore and alongshore. Limited onshore transport would be expected due to the nature of currents and wave transport in that vicinity. Proper management could detect any onshore effects and modify disposal actions accordingly. Placement in the nearshore could help to reduce erosion on the beach near the Coos Bay North Jetty.

4. Types and Quantities of Wastes Proposed To Be Disposed of, and Proposed Methods of Release, Including Methods of Packing the Waste, if Any

For purposes of maintaining the existing federal channel, an average of approximately 1.38 million cubic yards (cy) of sediment is annually dredged from the estuary and placed in designated ODMDSs (Sites F and H) offshore of the entrance to Coos Bay. About half is classified as sand and the remainder as fine-grained material (silt). In the recent past the fine-grained material has been disposed at Site H and the sand at Site F although both sites have been designated to receive sand and silt. Since the recent channel deepening, Site H has shown evidence of mounding and its long-term viability to receive significant disposal volumes, without exceeding site boundaries, is being analyzed. Whether expansion of Site H, a shift to greater reliance on proposed Site F, or another management option is appropriate, is presently being studied.

For the present, proposed disposal site F will receive dredged materials transported by either government or private contractor hopper dredges or ocean-going barges. The dredges typically release dredged material while moving slowly through the disposal site. Mounding should be minimized by dispersing the disposal in such a manner and by placing material in both the nearshore and the offshore part of the proposed site, as appropriate.

Small quantities of non-Federal material are annually disposed at site F or H in accordance with Department of the Army permits. These disposals are determined to comply with the ocean dumping criteria.

5. Feasibility of Surveillance and Monitoring

Surveillance of the proposed disposal site can be made from shore facilities or vessels. Approaches to the Coos Bay entrance, including the disposal area, are surveyed annually by the Corps. Surveillance during heavy weather conditions is expected to be unnecessary since heavy sea conditions curtail ocean disposal operations.

The Corps and EPA have developed a site management plan which addresses post-disposal monitoring.

6. Disposal, Horizontal Transport and Vertical Mixing Characteristics of the Area, Including Prevailing Current Direction, and Velocity

Average currents in the region generally flow parallel to the bathymetric contours with downslope components predominating over upslope components near the bottom. Local current strength and direction, however, reflect the variability of local winds. During disposal operations in the summer months the predominant direction of material transport is southward, but with a stronger northward component the remainder of the year. At proposed site F dispersal characteristics range greatly depending on depth; the nearshore areas are very dispersive whereas dispersion in the offshore areas is minimal.

7. Existence and Effects of Current and Previous Discharges and Dumping in the Area (Including Cumulative Effects)

Disposal at designated Site F has resulted in significant mounding, as much as 20 feet by 1989, and in the Corps' 103 expanded Site F (1989) as much as 24 feet by 1994. No material from the Federal navigation project has been disposed in the designated Site F and the 1989 expansion area since 1994. Dredged material from other dredging has been placed at the EPA designated site under Department of the Army permits. Material dredged from the Federal navigation project has been managed since 1995 by placement further offshore, nearshore, and to the north within the area of the presently proposed for designation. Material placed into the nearshore portion of the proposed site has moved out between dredging cycles.

No significant biological impacts have been associated with any disposal at the Coos Bay sites.

8. Interference With Shipping, Fishing, Recreation, Mineral Extraction, Desalination, Fish and Shellfish Culture, Areas of Special Scientific Importance, and Other Legitimate Uses of the Ocean

The only known commercial and recreational uses occurring in the vicinity of proposed Site F are fishing and marine navigation. No significant impact to these activities has occurred in the past or is anticipated for the future. Commercial crabbing occurs in the area, especially in the nearshore portion. Timing of disposal in that portion has been scheduled to occur after the crabbing season has closed to minimize interference.

9. The Existing Water Quality of the Site as Determined by Available Data or Trend Assessment of Baseline Survey

Water and sediment quality analyses conducted in the study area and experience with past disposals in this region have not identified any adverse water quality impacts from ocean disposal of dredged material.

The ecology of the offshore area is a Northeast Pacific mobile sand community. This determination is based mainly on fisheries and benthic data. Neither the pelagic or benthic communities should sustain irreparable harm due to their mobility and widespread occurrence off the Oregon coast.

10. Potentiality for the Development or Recruitment of Nuisance Species in the Disposal Site

Nuisance species are considered as any undesirable organism not previously existing at the disposal site. They are either transported to or recruited to the site because the disposal of dredged material created an environment where they could establish. The major component of dredged material which might attract nuisance species is the organic material. The only material containing any appreciable amounts of organic material is that dredged between RM 12 and 15. This material has historically been

disposed at Site H. No nuisance species have been observed at this site in more than 10 years of monitoring.

11. Existence at or in Close Proximity to the Site of any Significant Natural or Cultural Features of Historical Significance

The cutural resource most likely to be directly impacted by the proposed project would be submerged shipwrecks at or near proposed Site F. Potential impacts may include exposure and destruction of remnants of shipwrecks if present in the location of areas scheduled for dredging or impacts from disposal at the disposal site. Proposed Site F and vicinity has been investigated and no shipwrecks have been found.

E. Proposed Action

The 1994 EIS concluded that the proposed site may be appropriately designated for use. The proposed site is compatible with the general criteria and specific factors used for site evaluation.

The designation of the larger Coos Bay Site F as approved Ocean Dumping Site is being published as proposed rulemaking. Management of this site will be delegated to the Regional Administrator of EPA Region 10.

It should be emphasized that, if an ocean dumping site is designated, such a designation does not constitute or imply EPA's approval of actual disposal of material at sea. Before ocean dumping of dredged material at the site may commence, the Corps of Engineers must evaluate the proposed Corps action or a permit application according to EPA's ocean dumping criteria. EPA has the right to disapprove the actual dumping, if it determines that environmental concerns under MPRSA have not been met.

F. Regulatory Assessment

1. Consistency With the Coastal Zone Management Act

The designation of proposed Site F has been determined by the Corps and EPA to be consistent with the acknowledged local comprehensive plans and the State of Oregon Coastal Zone Management Program. The State of Oregon, Department of Land Conservation and Development, reviewed this consistency determination and concurred (1994 EIS).

2. Endangered Species Act Consultation

Federally listed species, under the administration of the National Marine Fishery Service (NMFS), which may occur in or near the proposed disposal site include: gray, fin, humpback, blue, sei, sperm and right whales, Steller sea lions, leatherback, loggerhead and green sea turtles, Snake River sockeye salmon, Snake River fall and spring/summer chinook salmon and Sacramanto River winter-run chinook salmon. They are normally present in offshore waters and occur in limited numbers on a seasonal basis. Biological Assessments have been prepared and concurrence letters from NMFS received.

Five Federally listed species administered by the U.S. Fish and Wildlife Service (USFWS) occur in the coastal area. Species present are the brown pelican, peregrine falcon, bald eagle, western snowy plover, and the marbled murrelet. The peregrine falcon and the bald eagle are proposed for de-listing. Biological Assessments have been prepared and concurrence received.

G. Administrative Review

1. Executive Order 12866

Under Executive Order 12866 (58 FR 51735, October 4,1993), EPA must determine whether the regulatory action is ''significant'', and therefore subject to OMB review and other requirements of the Executive Order. The Order defines ''significant regulatory action'' as one that is likely to lead to a rule that may:

(a) Have an annual effect on the economy of $100 million or more, or adversely affect in a material way, the economy, a sector of the economy, productivity, competition, jobs, the environment, public health or safety, or State, local or tribal governments or communities;

(b) Create a serious inconsistency or otherwise interfere with an action taken or planned by another agency;

(c) Materially alter the budgetary impact of entitlements, grants, user fees, or loan programs, or the rights and obligations of recipients thereof; or

(d) Raise novel legal or policy issues arising out of legal mandates, the President's priorities, or the principles set forth in the Executive Order.

This proposed rule does not entail ''significant regulatory action'' as defined. Consequently EPA has determined that this proposed rule is not a ''significant regulatory action'' under the terms of Executive Order 12866.

2. Executive Order 13084

Under Executive Order 13084, EPA may not issue a regulation that is not required by statute that significantly or uniquely affects the communities of Indian tribal governments, and that imposes substantial direct compliance costs on those communities, unless the Federal government provides the funds necessary to pay the direct compliance costs incurred by the tribal governments, or EPA consults with those governments. If EPA complies by consulting, Executive Order 13084 requires EPA to provide to the Office of Management and Budget in a separately identified section of the preamble to the rule, a description of the extent of EPA's prior consultation with representatives of affected tribal governments, a summary of the nature of their concerns, and a statement supporting the need to issue the regulation. In addition, Executive Order 13083 requires EPA to develop an effective process permitting elected officials and other representatives of Indian tribal governments ''to provide meaningful and timely input in the development of regulatory policies on matters that significantly or uniquely affect their communities''.

This proposed rule does not significantly or uniquely affect the communities of Indian tribal governments. Tribal governments are not affected in any fashion. Accordingly, the requirements of section 3(b) of Executive Order 13084 do not apply to this rule.

3. Regulatory Flexibility

Under the Regulatory Flexibility Act (RFA), 5 U.S.C. 601 *et seq.*, as amended by the Small Business Regulatory Enforcement Fairness Act (SBREFA), federal agencies generally are required to conduct an initial regulatory flexibility analysis (IRFA) describing the impact of the regulatory action on small entities as part of a proposed rulemaking. However, under section 605(b) of the RFA, if the Administrator for the agency certifies that the proposed rule will not have a significant economic impact on a substantial number of small entities, the agency is not required to prepare an IRFA. The Administrator certifies, pursuant to section 605(b) of the RFA, that this proposed rule will not have a significant economic impact on a substantial number of small entities. Therefore, the agency did not prepare an initial regulatory flexibility analysis.

The RFA requires analysis of the impacts of a rule on the small entities subject to the rule's requirements. *See United States Distribution Companies* v. *FERC,* 88 F.3d 1105, 1170 (D.C. Cir. 1996). Today's proposed rule establishes no requirements applicable to small entities, and so is not susceptible to regulatory flexibility analysis as described by the RFA. (''No [regulatory flexibility] analysis is necessary when an agency determines that the rule will not have a significant economic impact on a substantial number of small entities that are subject to the requirements of the rule,'' *United Distribution at 1170,*

quoting Mid-Tex Elec. Co-op v. *FERC*, 773 F. 2d. 327, 342 (D.C. Cir. 1985) (emphasis added by *United Distribution* court).) The Agency is thus certifying that today's proposed rule will not have a significant economic impact on substantial number of small entities, within the meaning of the RFA.

4. Paperwork Reduction Act

The Paperwork Reduction Act, 44 U.S.C. 3501 *et seq.*, is intended to minimize the reporting and record-keeping burden on the regulated community, as well as to minimize the cost of Federal information collection and dissemination. In general, the Act requires that information requests and record-keeping requirements affecting ten or more non-Federal respondents be approved by OPM. Since the proposed Rule does not establish or modify any information or record-keeping requirements, but only clarifies existing requirements, it is not subject to the provisions of the Paperwork Reduction Act.

5. Unfunded Mandates

Title II of the Unfunded Mandates Reform Act (UMRA) of 1995 (Pub. L. 104–4) establishes requirements for Federal agencies to assess the effects of their regulatory actions on State, local and tribal governments and the private sector. Under section 202 of the UMRA, EPA generally must prepare a written statement, including a cost-benefit analysis, for proposed and final rules with ''Federal mandates'' that may result in expenditures to State, local and tribal governments, in the aggregate, or to the private sector, of $100 million or more in any year. Before promulgating an EPA rule for which a written statement is needed, Section 205 of the UMRA generally requires EPA to identify and consider a reasonable number of regulatory alternatives and adopt the least costly, most cost-effective or least burdensome alternative that achieves the objectives of the rule, the provisions of section 205 do not apply when they are inconsistent with applicable law. Moreover, section 205 allows EPA to adopt an alternative other than the least costly, most cost-effective or least burdensome alternative if the Administrator publishes with the final rule an explanation why the alternative was not adopted. Before EPA establishes any regulatory requirements that may significantly or uniquely affect small governments, including tribal governments, it must have developed under section 203 of the UMRA a small government agency plan. The plan must provide for notifying potentially affected small governments, enabling officials of affected small governments to have meaningful and timely input in the development of EPA regulatory proposals with significant Federal intergovernmental mandates, and informing, educating, and advising small governments on compliance with the regulatory requirements.

This proposed rule contains no Federal mandates (under the regulatory provisions of Title II of the UMRA) for State, local or tribal governments or the private sector. It imposes no new enforceable duty on any State, local or tribal governments or the private sector. Similarly, EPA has also determined that this Rule contains no regulatory requirements that might significantly or uniquely affect small government entities. Thus, the requirements of section 203 of the UMRA do not apply to this rule.

6. Executive Order 12875

Today's proposed rule does not create a mandate on State, local or tribal governments. The rule does not impose any enforceable duties on these entities. Accordingly, the requirements of section 1(a) of the Executive Order do not apply to this Rule.

7. Executive Order 13045

The Executive Order applies to any rule that: (1) Is determined to be ''economically significant'' as defined under E.O. 12866, and (2) Concerns an environmental health or safety risk that EPA has reason to believe may have a disproportionate effect on children.

EPA interprets E.O. as applying only to those regulatory actions that are based on health or safety risks, such that the analysis required under section 5–501 of the Order has the potential to influence the regulation. This proposed rule is not subject to E.O. 13045 because it is not economically significant as defined under E.O. 12866 and, further, it does not establish an environmental standard intended to mitigate health or safety risks.

8. Executive Order 12898

To the greatest extent practicable and permitted by law, and consistent with the principles set forth in the report on the National Performance Review, each Federal agency must make achieving environmental justice part of its mission by identifying and addressing, as appropriate, disproportionately high and adverse human health and environmental effects of its programs, policies, and activities on minority populations and low-income populations in the United States and its territories and possessions, the District of Columbia, the Commonwealth of Puerto Rico, and the Commonwealth of the Mariana Islands.

Because this proposed rule addresses ocean dumping (away from inhabited land areas), with no anticipated significant adverse human health or environmental effects, the rule is not subject to Executive Order 12898.

BILLING CODE 6560–50–P

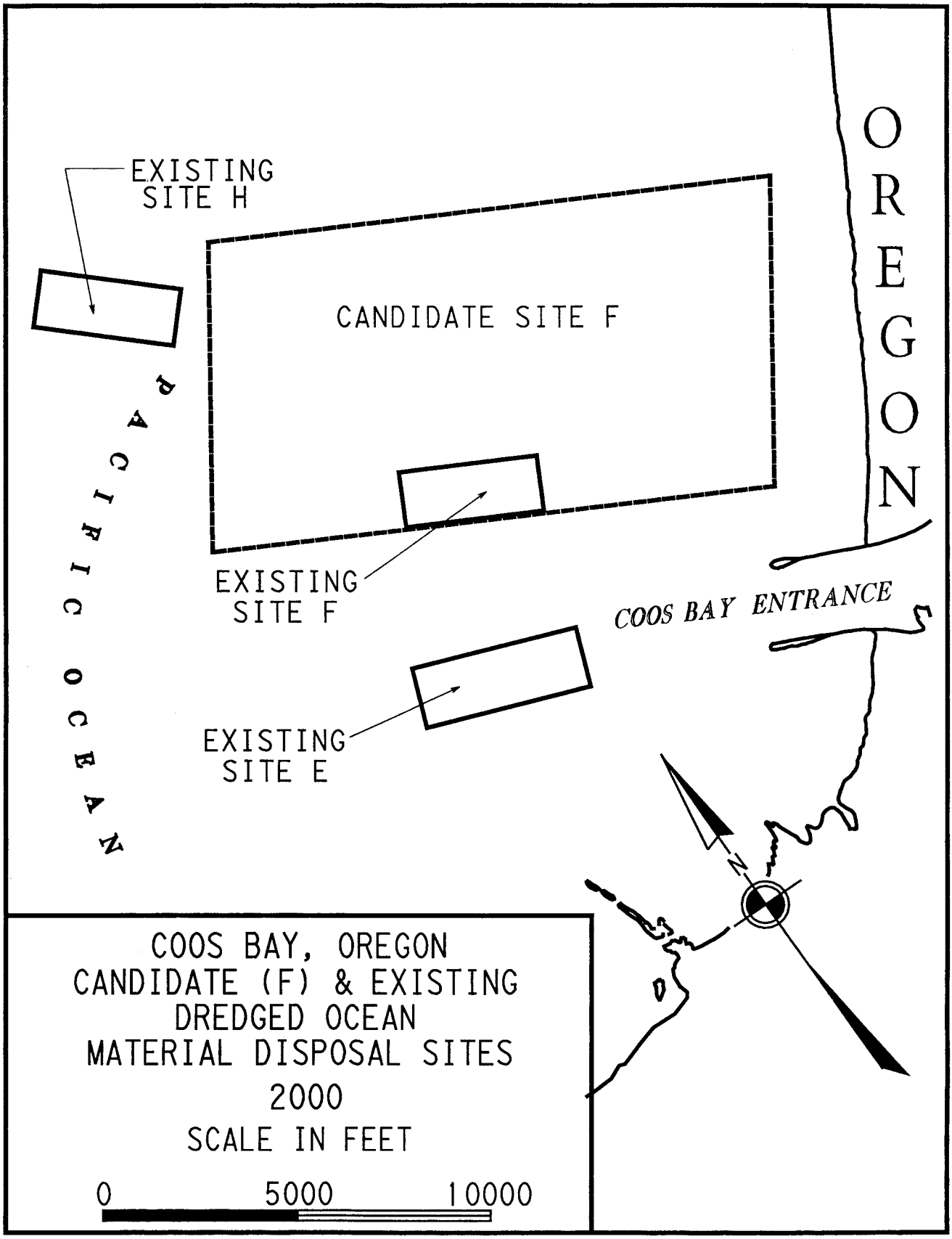

BILLING CODE 6560–50–C

List of Subjects in 40 CFR Part 228.

Environmental protection, Water pollution control.

Dated: March 15, 2000.

Chuck Clarke,

Regional Administrator for Region X.

For the reasons set out in the preamble, Chapter I of title 40 is amended as set forth below:

PART 228—[AMENDED]

1. The authority citation for Part 228 continues to read as follows:

Authority: 33 U.S.C. 1412 and 1418.

2. Section 228.15 is amended by revising paragraphs (n) (4) (i), (ii), (iii), (iv), (v), and (vi) to read as follows:

§ 228.15 Dumping sites designated on a final basis.

* * * * *

(n) * * *

(4) * * *

(i) Location: 43°22′58″ N., 124°19′32″ W.; 43°21′50″ N., 124°20′29″ W.; 43°22′52″ N., 124°23′28″ W.; 43°23′59″ N., 124°22′31″ W. (NAD 83)

(ii) Size: 4.42 kilometers long and 2.44 kilometers wide.

(iii) Depth: Ranges from 6 to 51 meters.

(iv) Primary Use: Dredged material.

(v) Period of Use: Continuing Use.

(vi) Restriction: Disposal shall be limited to dredged material determined to be suitable for unconfined disposal and any other restrictions contained in the then-currently approved site monitoring and management plan.

* * * * *

[FR Doc. 00–7734 Filed 3–30–00; 8:45 am]

BILLING CODE 6560–50–P

FEDERAL COMMUNICATIONS COMMISSION

47 CFR Part 2

[ET Docket No. 00–47, FCC 00–103]

Inquiry Regarding Software Defined Radios

AGENCY: Federal Communications Commission.

ACTION: Notice of inquiry.

SUMMARY: This document requests comments on ''software defined radio'', which the Commission believes could have wide range implications for radio technology and our regulatory policies. Software defined radios have the potential to change the way users can communicate across traditional services and to promote efficient use of spectrum. The Commission believe's that software defined radios could significantly affect a number of Commission functions, including spectrum allocation, spectrum assignment, and equipment approval. The purpose of this inquiry is to gather information on the state of software defined radio technology, interoperability issues, spectrum efficiency issues, equipment authorization processes, and other relevant issues.

DATES: Comments June 14, 2000; and reply comments July 14, 2000.

ADDRESSES: All filings must be sent to the Commission's Secretary, Magalie Roman Salas, Office of the Secretary, Federal Communications Commission, 415 12th Street, SW, TW–A325, Washington, DC 20554.

FOR FURTHER INFORMATION CONTACT: Hugh Van Tuyl, Office of Engineering and Technology, (202) 418–7506.

SUPPLEMENTARY INFORMATION: This is a summary of the Commission's *Notice of Inquiry,* ET Docket 00–47, FCC 00–103, adopted March 17, 2000, and released March 22, 2000. The full text of this Commission decision is available for inspection and copying during normal business hours in the FCC Reference Information Center, Room Cy-A257, 445 12th Street, SW, Washington, DC, and also may be purchased from the Commission's duplication contractor, International Transcription Services, Inc. (202) 857–3800, 1231 20th Street, NW, Washington, DC 20036.

Summary of Notice of Inquiry

1. The Commission initiated this *Notice of Inquiry* (''NOI'') to obtain comments from the public on a variety of issues related to software defined radios. Software defined radios could offer tremendous advantages to consumers over currently available wireless equipment. These benefits include lower cost, a greater variety of features, and the ability to adapt to multiple communication standards. They could also offer advantages to manufacturers, such as increased economies of scale in production, increased worldwide market opportunities, and a decrease in the number of devices that must be maintained in inventory. Software defined radios could expand access to broadband communications for all persons and increase competition among telecommunication service providers. Through this inquiry, we seek input to help us evaluate the current state of software defined radio technology, and to determine whether changes to the Commission's rules are necessary to facilitate the deployment of this technology. Upon review of the responses to this inquiry, we will determine whether to propose any changes to the rules.

2. Software defined radio technology was originally developed for the United States military. The ''SPEAKeasy'' project was undertaken by the Department of Defense with the goal of developing a multi-band, multi-mode software. The SPEAKeasy project showed that a software defined radio is feasible. Nevertheless, there are many technological hurdles that must be overcome before software defined radios can be widely deployable. For example, there are limitations on the speed and dynamic range of current analog to digital converters, physical limitations on the frequency range over which an antenna can operate, and speed and cost constraints on digital signal processing circuitry. In addition, standards that would allow interoperability between hardware and software produced by different manufacturers are still under development. Therefore, in order to assist us in understanding the current state of software defined radio technology, we seek comment in the following areas.

- What features in a radio are apt to be controlled by software? For example, could the operating frequency, output power, and modulation format be software controlled?
- What are the specific limitations of current software defined radio technology? What are the cost implications?
- What capabilities could software defined radios have that are not found in current radio technology?
- When could software defined radios be deployed commercially, and for what services or purposes?
- What work is being done on software defined radios internationally, and are there any steps the Commission should take to encourage this work?

3. Interoperability. The Commission's rules are divided up into a number of parts that contain the requirements for various licensed radio services. The rules for each service specify the operating frequencies and other technical requirements for radio equipment in that particular service. In some cases there is overlap between these frequencies and other requirements, so equipment can be developed to operate in more than one service. However, in most cases, equipment designed to operate in one service can not communicate with equipment designed to operate in another service, and in some cases can not even communicate with other equipment in the same service due to

lack of common transmission standards or operating frequencies.

4. The inability of users to communicate due to non-uniform standards within services or between services can be a serious problem. The ability of software defined radios to change frequency and transmission standards would appear to be a way to overcome the lack of interoperability between different wireless systems. We are therefore asking for comment on the following questions.

- To what extent can software defined radios improve interoperability between different public safety agencies?
- To what extent can software defined radios improve interoperability between equipment and services using differing transmission standards?
- To what extent would software defined radios move toward uniformity in standards within or across bands?
- To what extent can software defined radios be used to facilitate transitions from one technical standard to another, such as the transition mandated by the land mobile ''refarming'' proceeding?
- What particular means could be employed by software defined radios to facilitate interoperability?

5. Improving spectrum efficiency and spectrum sharing. The Commission allocates bands of spectrum to the various radio services in the rules, and maintains a table of these frequency allocations. In order to operate within a service, a license issued by the Commission is required. The rules for each service specify eligibility requirements for obtaining a license, and the technical requirements for operation, including location, power and frequency. Licenses may be issued through an application process, or through a competitive bidding process.

6. Because of the ability to be easily reprogrammed, a software defined radio would not be limited to operation within a single fixed frequency band or on a limited set of pre-programmed channels. It could have the capability of operating on any frequency within the limits of its design, and could operate on channels of varying widths with varying modulation formats. Further, it should be possible to design the equipment with some ''intelligence,'' which would let it monitor the spectrum to detect usage by other parties and transmit on open frequencies. These capabilities could open up new possibilities in the area of spectrum allocation and licensing.

7. The use of software defined radios may also enable new types of spectrum sharing that are currently precluded by today's conventional equipment. For example, our PCS rules permit wide flexibility in terms of the services offered and technology employed in the PCS spectrum. In the event that a PCS licensee has spectrum available in excess of its immediate needs, it could lease that spectrum on a short-term basis to a third party. Software defined radio could facilitate such sharing. A third party could, for example, acquire from a manufacturer software defined radio equipment capable of being configured to offer different services in the various frequency ranges. Having negotiated for spectrum use, it would be in a position to rent a package of equipment and ''airtime'' to end users needing communications capacity on a short-term basis. It would load the appropriate software to properly configure the equipment at the time the end user enters into the rental agreement. Another alternative would be for the end user to contract directly with the licensee for the necessary spectrum and then rent the properly configured software defined radio equipment. With today's technology, such short-term sharing is difficult or impossible to accomplish due to the difficulties associated with quickly configuring radios for different applications in novel spectrum configurations. As a result, we believe that significant public benefits might flow from software defined radio technology. The public benefits include increased communications capacity for end users and better utilization of the spectrum resource. We seek comments regarding these potential benefits and what regulatory steps we might take to

8. Functions described in the NOI have the potential to allow spectrum to be utilized more efficiently. We are therefore seeking comment on the following areas related to frequency allocation and licensing.

- To what extent could software defined radios improve the efficiency of spectrum usage?
- What particular functions related to spectrum usage could a software defined radio perform? Could it locate free spectrum, dynamically allocate bandwidth, and enable better sharing of the spectrum?
- How specifically could it carry out these functions?
- What are the benefits of the spectrum sharing arrangements described above, and what steps might we take to permit the use of software defined radios to enable such sharing arrangements?
- What changes may be appropriate for the way the Commission currently allocates spectrum?
- If changes are warranted, how could we make the transition from the current allocation and licensing model to a new model?

9. Equipment approval process. Section 302 of the Communications Act of 1934, as amended, authorizes the Commission to make reasonable regulations, consistent with the public interest, governing the interference potential of equipment that emits radio frequency energy. The Commission carries out its responsibilities under this section by establishing technical regulations for transmitters and other equipment to minimize their potential for causing interference to radio services, and by administering an authorization program to ensure that equipment reaching the market complies with the technical requirements. The authorization program requires that equipment be tested either by the manufacturer or at a private test laboratory to ensure that it complies with the technical requirements. The majority of radio transmitters require the submission of an application that must be reviewed and approved before the equipment can be marketed, although certain transmitters may be authorized through a manufacturer's self-approval process.

10. A transmitter is approved to a specific set of technical parameters, including the operating frequencies, output power, and types of radio frequency emissions. If a manufacturer changes these parameters after a piece of equipment has been authorized, the FCC issues a new approval before the unit may be marketed with the changes. By design, the operating parameters of a software defined radio can be readily changed in the field by altering its software. Such a change could violate the terms of the transmitter's equipment authorization by causing it to operate in modes for which it has not been approved. Also, our rules do not allow parties other than the grantee of the equipment authorization to make modifications to approved equipment without obtaining a new approval. Even if a new approval were obtained by the original grantee, the rules require the modified transmitter to be labeled with a new FCC identification number, which would be impractical for software modification of equipment that is already in the field. We therefore seek comments on the following issues related to the authorization of software defined radio transmitters.

- Should we approve the radio hardware, the software or the combination of them?
- Are the currently required measurements in Part 2 of the rules appropriate for software defined radios?
- How should software defined radio equipment be tested for compliance, including compliance with SAR requirements? What type of approval process and labeling would be appropriate?

• Should we regulate who changes the software and the manner in which it is done? If so, should the Commission maintain records of such modifications?

• What are the various means that may be used to download new software? We anticipate, for example, that software could be downloaded by methods such as direct connection to a programming device or over the airwaves. To what extent will the software interfaces be standardized?

• Should we require anti-tampering or other security features? How would such security features work? Could equipment be designed to prevent it from transmitting in certain designated frequency bands, such as those allocated exclusively for government use, as a safeguard against causing interference?

• Do we need to adopt additional requirements for software defined radios to ensure the privacy of users' communications?

11. One possible scenario for an approval process for software defined radios could be as follows. The software could be tested and approved to ensure that the transmitter meets the applicable technical requirements under all operating conditions. In order to ensure that untested and unapproved software could not be loaded, such transmitters would have an authentication system that checks the software for an authentication code added to it by the FCC or a Telecommunications Certification Body (TCB). The software itself would be submitted for approval in a process similar to today's application process except that a copy of the object code would be supplied in machine-readable form. Upon approving the software application, which would involve a test of the hardware and software together similar to today's tests, the FCC or TCB would compute the authentication code for the submitted source code and send it to the applicant. The authentication system would be a two key system in which the key needed to compute the authentication code would be known to only the FCC or TCB, and the key needed to check in a transmitter object code which is being loaded would be publicly available.

12. In an analogy to the current requirement for labeling a transmitter, there may be a need for a method to allow users to determine whether the desired operating software is currently loaded in a transmitter, and to allow Commission enforcement personnel to verify that the software has been approved. To meet this need, the transmitter could display information about the software installed by a means such as a liquid crystal display (LCD) screen in response to an input from a keypad. The identification information about the software installed in the radio could include such information as the technical operating parameters, the source of the software, and the name of the body that approved it. The user manual and the authorization application would describe how to access this information. Since such radios are expected to have displays for user information and input mechanisms for the user in normal use, we do not think this requirement would be burdensome. We seek comments on the following questions about this possible approval method.

• Is there a need for such an approval system, and is it feasible and practical?

• What type of authentication system should be used? Should there be one system or alternative systems? Who should have responsibility for generating the authentication codes: the FCC, TCBs, equipment manufacturers, or some other party?

• In the case of transmitters subject to verification how should authentication of software be handled? For example, could an ''authentication only'' service be offered in which the FCC or TCB computes the authentication code for the software after all elements of compliance with the FCC rules are verified by the manufacturer?

• How should simple changes to software be handled that do not affect the operating parameters of the equipment but require the computation of a new authentication code? Could an ''authentication only'' service be offered for them?

• Is there a need for a method to display information about the software loaded in a transmitter? If so, what method should be used and what information should be displayed?

13. Other matters. The questions raised in this notice are intended to solicit information to assist the Commission in deciding whether to propose rule changes as a result of the developing software defined radio technology. We realize that these questions do not necessarily encompass all of the issues raised by this technology. Commenters may want to address whether software defined radio technology could help parties comply with Sections 255 and 251(a) of the Communications Act. These sections require manufacturers of telecommunications equipment and providers of telecommunications services to ensure that such equipment and services are accessible to persons with disabilities, if readily achievable. Commenters may also wish to address how we would enforce any new rules for software defined radios. Accordingly, comments are invited on any other matters or issues that may be pertinent to software defined radios.

Federal Communications Commission.

Magalie Roman Salas,

Secretary.

[FR Doc. 00–7967 Filed 3–30–00; 8:45 am]

BILLING CODE 6712–01–U

FEDERAL COMMUNICATIONS COMMISSION

47 CFR Part 73

[DA 00–586; MM Docket No. 99–212; RM–9640]

Radio Broadcasting Services; Amelia, LA

AGENCY: Federal Communications Commission.

ACTION: Proposed rule; denial.

SUMMARY: This document denies a petition for rule making filed by Mountain West Broadcasting proposing the allotment of FM Channel 249C3 to Amelia, Louisiana, as that locality's first local aural transmission service. Petitioner failed to establish the availability of a suitable location for tower construction as the required site restriction located 18.4 kilometers south of the community at coordinates 29–30–21 NL and 91–03–46 WL to accommodate Channel 249C3 at Amelia is in marshland. See 64 FR 31173, June 10, 1999. With this action, this proceeding is terminated.

ADDRESSES: Federal Communications Commission, Washington, DC 20554.

FOR FURTHER INFORMATION CONTACT: Nancy Joyner, Mass Media Bureau, (202) 418–2180.

SUPPLEMENTARY INFORMATION: This is a synopsis of the Commission's Report and Order, MM Docket No. 99–212, adopted March 8, 2000, and released March 17, 2000. The full text of this Commission decision is available for inspection and copying during normal business hours in the FCC's Reference Information Center (Room CY–A257), 445 Twelfth Street, SW., Washington, DC. The complete text of this decision may also be purchased from the Commission's copy contractor, International Transcription Service, Inc., 1231 20th Street, NW., Washington, DC 20036, (202) 857–3800.

Federal Communications Commission.

John A. Karousos,

Chief, Allocations Branch, Policy and Rules Division, Mass Media Bureau.

[FR Doc. 00–7828 Filed 3–30–00; 8:45 am]

BILLING CODE 6712–01–P

Notices

Federal Register
Vol. 65, No. 63
Friday, March 31, 2000

This section of the FEDERAL REGISTER contains documents other than rules or proposed rules that are applicable to the public. Notices of hearings and investigations, committee meetings, agency decisions and rulings, delegations of authority, filing of petitions and applications and agency statements of organization and functions are examples of documents appearing in this section.

AFRICAN DEVELOPMENT FOUNDATION

Board of Directors Meeting; This Supercedes the Announcement Published on December 1, 1999

Time: 1:00 p.m. to 4:00 p.m.

Place: ADF Headquarters, 1400 Eye St., NW., 10th Floor, Washington, DC 20005.

Date: Wednesday, 12 April 2000.

Status: Open.

Agenda

1:00 p.m.—Chairman's Report.
1:30 p.m.—President's Report.
2:30 p.m.—New Business.
3:00 p.m.—Closed Session.
4:00 p.m.—Adjournment.

If you have any questions or comments, please direct them to Dick Day, Coordinator, Office of Policy, Planning and Outreach, who can be reached at (202) 673–3916.

William R. Ford,
President.

[FR Doc. 00–8085 Filed 3–28–00; 4:49 pm]

BILLING CODE 6116–01–U

DEPARTMENT OF AGRICULTURE

Submission for OMB Review; Comment Request

March 27, 2000.

The Department of Agriculture has submitted the following information collection requirement(s) to OMB for review and clearance under the Paperwork Reduction Act of 1995, Public Law 104–13. Comments regarding (a) whether the collection of information is necessary for the proper performance of the functions of the agency, including whether the information will have practical utility; (b) the accuracy of the agency's estimate of burden including the validity of the methodology and assumptions used; (c) ways to enhance the quality, utility and clarity of the information to be collected; (d) ways to minimize the burden of the collection of information on those who are to respond, including through the use of appropriate automated, electronic, mechanical, or other technological collection techniques or other forms of information technology should be addressed to: Desk Officer for Agriculture, Office of Information and Regulatory Affairs, Office of Management and Budget (OMB), Washington, D.C. 20503 *and* to Departmental Clearance Office, USDA, OCIO, Mail Stop 7602, Washington, D.C. 20250–7602. Comments regarding these information collections are best assured of having their full effect if received within 30 days of this notification. Copies of the submission(s) may be obtained by calling (202) 720–6746.

An agency may not conduct or sponsor a collection of information unless the collection of information displays a currently valid OMB control number and the agency informs potential persons who are to respond to the collection of information that such persons are not required to respond to the collection of information unless it displays a currently valid OMB control number.

Farm Service Agency

Title: Disaster Assistance—General (7 CFR part 1945–A).

OMB Control Number: 0560–0170.

Summary of Collection: Subtitle C of the Consolidated Farm and Rural Development Act of 1972, as amended, authorizes emergency loss (EM) loans for the purpose of assisting farmers and ranchers who have suffered weather-related physical and production losses in areas declared by the President, designated by the Secretary of Agriculture, or named for physical loss loans by the Farm Service Agency (FSA) Administrator. For EM production loss loan, applicants must show a 30% loss in at least one basic farming enterprise. For Physical losses, applicants must show that property damaged or destroyed is essential to the continued operation of the farming or ranching operations. Applicant must be unable to obtain commercial credit or recover from the disaster and meet the specific eligibility and repayment requirements. FSA will collect information to evaluate requests for a Secretarial natural disaster designation.

Need and Use of the Information: FSA will collect information on determining whether sufficient losses have been suffered to warrant a Secretarial natural disaster designation, determine whether extenuating circumstances exist to grant a natural disaster designation under the Secretary's discretionary authority. The information will be used by FSA to process State Governor requests for Secretarial natural disaster designations.

Description of Respondents: Farms; Federal Government; State, Local or Tribal Government.

Number of Respondents: 2,236.

Frequency of Responses: Reporting: On occasion.

Total Burden Hours: 988.

Food and Nutrition Service

Title: Status of Claims Against Households.

OMB Control Number: 0584–0069.

Summary of Collection: Section 11, 13, and 16 of the Food Stamp Act of 1977, as amended (the Act) and appropriate Food Stamp Program Regulation are the basis for the information collected on FNS–209. Food Stamp Program regulations require that State agencies submit quarterly form FNS–209, Status of Claims Against Households, reports. The required information provided on this report must be obtained from a State accountable system responsible for establishing claims, sending demand letters, collecting claims, and managing other claim activity.

Need and Use of the Information: The Food and Nutrition Service (FNS) will collect information on the outstanding aggregate claim balance; claims established; collections; any balance and collection adjustments; and the amount to be retained for collecting non-agency error claims. The information will be used by State agencies to ascertain aggregate claim balance and collections for determining overall performance, the collection amounts to return to FNS, and claim retention amounts. FNS will receive collections and report collection activity to Treasury.

Description of Respondents: State, Local or Tribal Government.

Number of Respondents: 53.

Frequency of Responses: Recordkeeping; Reporting: Quarterly.

Total Burden Hours: 742.

Forest Service

Title: Airplane Pilot Qualifications and Approval Record, Helicopter Pilot Qualifications and Approval Record, Airplane Data Record, and Helicopter.

OMB Control Number: 0596–0015.

Summary of Collection: The Forest Service (FS) is the largest owner and operator of aircraft in the federal government outside of the Department of Defense. In conducting the Forest Service land management mission they use 44 owned aircraft with 306 aircraft on loan to 18 States for fire suppression activities. The majority of FS flying is in support of wildland fire suppression. In addition to the agency owned aircraft, the FS contracts with approximately 400 vendors for aviation services used in resource protection and administrative projects. Contractor aircraft and pilots are used to place water and chemical retardants on fires, provide aerial delivery of firefighters to fires, perform reconnaissance, resource surveys, search for lost personnel, and fire detection. Contracts for such services established rigorous qualification requirements for pilots and specific condition/equipment/performance requirements for aircraft. The authority is granted under the Federal Aviation Administration Regulations in Title 14 (Aeronautics and Space) of the Code of Federal Regulations. FS will collect information using forms FS 5700–20 & 20a and FS 5700–21 & 21a.

Need and Use of the Information: FS will collect information to document the basis for approval of contract pilot and aircraft for use in specific FS aviation missions. The information collected from contract pilots in face to face meetings (such as name, age, pilots license number, number of hours flown in type of aircraft, *etc.*) is based on the length and type of contract but is usually done on a reoccurring annual basis. Without the information supplied on these forms, FS contracting officers and pilot/aircraft inspectors cannot determine if pilots and aircraft meet the detailed qualification, equipment, and condition requirements essential to safe, efficient accomplishment of FS specified flying missions and which are included in contract specifications.

Description of Respondents: Individuals or households; Business or other for-profit; State, Local or Tribal Government.

Number of Respondents: 988.

Frequency of Responses: Reporting: Annually.

Total Burden Hours: 248.

Rural Utilities Service

Title: 7 CFR 1980–I, Community Programs Guaranteed Loans.

OMB Control Number: 0572–NEW.

Summary of Collection: The Rural Utilities Service (RUS) is authorized by Section 306 of the Consolidated Farm and Rural Development Act (7 U.S.C. 1926) to make loans to public agencies, nonprofit corporations, and Indian tribes for the development of water and waste disposal facilities primarily serving rural residents. Implementation of the Community Program guaranteed loan program was effected to comply with the Appropriations Act of 1990 when Congress allocated funds for this authority. The guaranteed loan program encourages lender participation and provides specific guidance in the processing and servicing of guaranteed Water and Waste Disposal loans.

Need and Use of the Information: RUS will collect information to determine applicant/borrower eligibility, project feasibility, and to ensure borrowers operate on a sound basis and use loan funds for authorized purposes. Failure to collect proper information could result in improper determinations of eligibility, improper use of funds, and/or unsound loans.

Description of Respondents: Not-for-profit institutions; State, Local or Tribal Government.

Number of Respondents: 10.

Frequency of Responses: Reporting: On occasion; Annually.

Total Burden Hours: 1,352.

Agricultural Marketing Service

Title: Customer Service Survey (Meat Grading and Certification Services).

OMB Control Number: 0581–NEW.

Summary of Collection: The Agricultural Marketing Act (AMA) of 1946, as amended, authorizes the Secretary of Agriculture to provide consumers with voluntary Federal meat grading and certification services that facilitate the marketing of meat and meat products. The Meat Grading and Certification (MGC) Branch provides these services under the authority of 7 CFR Part 54B Meats, Prepared Meats, and Meat Products (Grading, Certification, and Standards). Applicants (individuals or businesses with financial interest in the product) may request MGC Branch services. Once services are provided, the MGC Branch does not have any way of determining the quality of service that is being provided to its customers. Therefore, the MGC Branch would like to annually conduct a customer service survey to gather information from its customers.

Need and use of the Information: The Agricultural Marketing Service will collect information to evaluate services and assist in planning and managing the program. The information will be used to continually improve the MGC Branch services.

Description of Respondents: Business or other for-profit.

Number of Respondents: 428.

Frequency of Responses: Reporting: Annually.

Total Burden Hours: 36.

Agricultural Marketing Service

Title: Federal-State Shipping Point Inspection Program Customer Service Survey.

OMB Control Number: 0581–NEW.

Summary of Collection: The Agricultural Marketing Service (AMS) provides federal oversight of grading and product certification services of fresh fruits and vegetables at shipping point locations under authority of 7 CFR Part 51, Regulations Governing Inspection, Certification and Standards for Fresh Fruits, Vegetables, and Other Products. These services are provided through cooperative agreements with all State grading and certification services by providing Federal oversight to the state grading programs, including training, license certification, and indirect supervisory oversight of shipping point graders employed by the states. To maintain and improve the quality of these services, AMS has sought to make this process more customer-driven and therefore is seeking opinion from the users of these services. AMS will distribute the FV–600, A Federal-State Shipping Point Inspection Program Customer Service Survey. AMS will collect information using a survey for customers that use the USDA Federal-State Shipping Point Inspection Program services.

Need and Use of the Information: AMS will collect information to maintain and improve grading and certification services through the revision of current grading and certification services and by the development of new and improved services that respond to customer needs while maintaining program integrity. Information collected will be shared with each participating State in a cooperative effort to seek improvements in the delivery of services to the customers and to design new grading and certification services that meet customer needs. If the information is not collected AMS will not be able to obtain timely and accurate information about its services from the customers that use them.

Description of Respondents: Business or other for-profit; farms.

Number of Respondents: 18,000.

Frequency of Responses: Reporting: On occasion.

Total Burden Hours: 3,000.

William McAndrew,

Departmental Clearance Officer.

[FR Doc. 00–8006 Filed 3–30–00; 8:45 am]

BILLING CODE 3410–01–M

DEPARTMENT OF AGRICULTURE

Office of the Secretary

Privacy Act: Proposed New System of Records

AGENCY: Office of the Secretary, USDA.

ACTION: Notice of proposed new System of Records—USDA/FNS–10, entitled Persons Doing Business with the Food and Nutrition Service.

SUMMARY: In accordance with the requirements of the Privacy Act of 1974, as amended, 5 U.S.C. 552a, the United States Department of Agriculture (USDA), Food and Nutrition Service (FNS), is giving notice that it proposes to add a new system of records.

FNS is creating a new system of records to include the names, addresses and Social Security Numbers of persons involved in a direct payment relationship with FNS, including program sponsors, contractors and other individuals. The Debt Collection Improvement Act of 1996 (DCIA), Public Law 104–134, requires FNS to collect taxpayer identifying numbers (TINs) from all individuals and entities with which FNS does business, and to furnish the TIN with each certified voucher requesting payment. The Privacy Act of 1974, in turn, requires that before personal identifying information may be shared with other entities, a Privacy Act notice must be published. Therefore, FNS is publishing the accompanying notice announcing the establishment of a system of records providing routine uses to allow FNS to provide TINs to the Department of the Treasury for the purposes required under the Law.

EFFECTIVE DATE: This notice will be effective, without further notice, May 10, 2000 unless modified by a subsequent notice to incorporate comments received by the public. Comments must be received by the contact person listed below on or before May 1, 2000 to be assured consideration.

ADDRESSES: Comments should be addressed to: Lou Pastura, Director, Grants Management Division, Food and Nutrition Service, USDA, Room 407, 3101 Park Center Drive, Alexandria, Virginia 22302.

FOR FURTHER INFORMATION CONTACT: Mark Porter at (703) 305–2048.

SUPPLEMENTARY INFORMATION: The Debt Collection Act of 1982 (Pub. L. 97–365), as amended, provides statutory authority for Federal agencies to collect debts through administrative offset. The Debt Collection Improvement Act of 1996 (Pub. L. 104–134), expanded that statutory authority by requiring Federal agencies to obtain TINs from all individuals and entities doing business with it, and to furnish the TIN with each certified voucher requesting payment. This requirement enables the TINs of Federal payment recipients to be made available to match against a debtor masterfile to facilitate debt collection by administrative offset under the DCIA, and for income reporting to the Internal Revenue Service.

As a prerequisite to making TINs available for such purposes, the Privacy Act of 1974, as amended, requires that agencies that maintain a system of records must publish a notice in the **Federal Register** of the existence and character of the system of records. This includes each routine use of the records contained in the system including categories of users and the purpose of such use. Thus, FNS is proposing the following routine uses for this system of records, so that FNS can fully comply with the legislative mandate cited above.

This system of records contains personal information from individuals and entities who receive payments directly from FNS under any of the various nutrition and nutrition education programs FNS administers. The following information regarding individuals and entities is contained in the system: Name, home address, Social Security Number (SSN), and Employer Identification Number (EIN). The system may also include information such as company or sponsor name, and financial data such as amounts of payments to be made.

This system of records is not a financial management system that is used to track and identify financial payments which become delinquent; however, for FNS to be in compliance with the law as required by the DCIA, FNS must share with the Department of the Treasury the personal identifying information (such as the debtor's/payee's name, home address, SSN, and EIN (which is not considered a personal item of information)) of those individuals in this system to whom FNS is providing direct payment. As stated previously, FNS must publish a Privacy Act notice before personal identifying information may be shared with the Department of the Treasury.

A ''Report on a New System,'' required by 5 U.S.C. 552a(r), as implemented by OMB Circular A–130, was sent to the Chairman, Senate Committee on Governmental Affairs, the Chairman, House Committee on Government Reform and Oversight, and to the Administrator, Office of Information and Regulatory Affairs, of the Office of Management and Budget on March 27, 2000.

Signed at Washington, D.C. on March 27, 2000.

Dan Glickman,

Secretary of Agriculture.

USDA/FNS–10

SYSTEM NAME:

USDA/FNS–10 Persons Doing Business with the Food and Nutrition Service (FNS).

SECURITY CLASSIFICATION:

None.

SYSTEM LOCATION:

This system of records is under the control of the Deputy Administrator, Financial Management, Food and Nutrition Service, United States Department of Agriculture, 3101 Park Center Drive, Alexandria, Virginia 22302. The data is maintained in the Agency Financial Management System (AFMS), FNS's automated financial system.

CATEGORIES OF INDIVIDUALS COVERED BY THE SYSTEM:

The system consists of information on individuals who receive payments directly from FNS under any of the various nutrition and nutrition education programs FNS administers. These individuals may include program sponsors, contractors, and other individuals. They do not include program benefit recipients or State agencies.

CATEGORIES OF RECORDS IN THE SYSTEM:

The information in the system consists of individuals' names, addresses, Social Security Numbers, Employer Identification Numbers, and amounts of payments to be made. The system may also include information such as company or sponsor name.

AUTHORITY FOR MAINTENANCE OF THE SYSTEM:

31 U.S.C. 7701(c)(1), the Debt Collection Improvement Act of 1996 (Pub. L. 104–134), Debt Collection Act of 1982 as amended (Pub. L. 97–365), the Child Nutrition Act of 1966 as amended the National School Lunch Act as amended, and the Food Stamp Act of 1977 as amended.

PURPOSE:

To facilitate the Congressional mandate under the DCIA to provide taxpayer identification numbers on all appropriate requests for payment to facilitate debt collection by administrative offset under the DCIA, and for income reporting to the IRS.

ROUTINE USES OF RECORDS MAINTAINED IN THE SYSTEM, INCLUDING CATEGORIES OF USERS AND THE PURPOSES OF SUCH USES:

(1) USDA/FNS may disclose information from this system of records to the appropriate agency, whether Federal, State, or local, charged with the responsibility of investigating or prosecuting a violation of law, or of enforcing or implementing a statute, rule, regulations, or order issued pursuant thereto, of any record within this system when information available indicates a violation or potential violation of law, whether civil, criminal, or regulatory in nature, and whether arising by general statute or particular program statute, or by rule, regulation, or order issued pursuant thereto.

(2) USDA/FNS may disclose information from this system of records to a court, magistrate, or administrative tribunal, or to opposing counsel in a proceeding before any of the above, of any record within the system which constitutes evidence in that proceeding, or which is sought in the course of discovery.

(3) USDA/FNS may disclose information from this system of records to a congressional office from the record of an individual provided that individual gave the congressional office permission to inquire on his or her behalf.

(4) USDA/FNS may disclose information from this system of records of the Internal Revenue Service, for the purpose of reporting canceled debts of $600 or more for violations committed under FNS programs. Canceled debts will be reported to the Internal Revenue Service on Form 1099–C (Cancellation of Debt) under the authority of the Income Tax Regulations (26 CFR parts 1 and 602) under section 6050P of the Internal Revenue Code.

(5) USDA/FNS may disclose information from this system of records to the Department of the Treasury on requests for payments for purposes of administrative offset, to be effected in cases where entities participating in FNS programs owe delinquent debts to other Federal agencies.

POLICIES AND PRACTICES FOR STORING, RETRIEVING, ACCESSING, RETAINING AND DISPOSING OF RECORDS IN THE SYSTEM:

STORAGE:

Records are maintained in the Agency's AFMS system on magnetic tapes, on data disks, and in file folders at FNS Headquarters and at the National Computer Center facility in Kansas City.

RETRIEVABILITY:

Records are retrievable by name, vendor number, and Social Security Number or Employer Identification Number.

SAFEGUARDS:

Access to records is limited to those persons who process the records for the specific routine uses stated above. Records in such formats as magnetic tape and disks are kept in physically secured rooms or cabinets. Various methods of computer security limit access to records in automated databases. Paper records are segregated and physically secured in locked cabinets.

RETENTION AND DISPOSAL:

Records are maintained in the automated AFMS system indefinitely. Paper records, where they are held, are maintained for three years and then destroyed pursuant to the applicable document retention and disposal schedule.

SYSTEM MANAGER(S) AND ADDRESS:

Director, Accounting Division, Food and Nutrition Service, United States Department of Agriculture, 3101 Park Center Drive, Room 415, Alexandria, Virginia, 22302.

NOTIFICATION PROCEDURE:

Individuals may request from the system manager identified above information regarding this system of records or whether the system contains records pertaining to them. Any individual requesting such information must provide his or her name, address, and Social Security Number.

RECORD ACCESS PROCEDURE:

Individuals may obtain information about records in the system pertaining to them by submitting a written request to the system manager listed above. The envelope and letter should be marked ''Privacy Act Request,'' and should include the name, address, and Social Security Number of the individual for which the request is made.

CONTESTING RECORD PROCEDURES:

Individuals desiring to contest or amend information maintained in the system should direct their requests to the system manager listed above, state the reason(s) for contesting the information, and provide any available documentation to support the requested action.

RECORD SOURCE CATEGORIES:

Information in this system is provided by the applications and contracts entered into by entities participating in the programs FNS administers. Personal information in this system is also obtained from the owners and officers of such entities as reported on the program applications and contracts for services provided under these programs.

EXEMPTIONS CLAIMED FOR THE SYSTEM:

None.

[FR Doc. 00–8005 Filed 3–30–00; 8:45 am]

BILLING CODE 3410–30–M

DEPARTMENT OF AGRICULTURE

Agricultural Research Service

Notice of Intent To Grant Exclusive License

AGENCY: Agricultural Research Service, USDA.

ACTION: Notice of intent.

SUMMARY: Notice is hereby given that the U.S. Department of Agriculture, Agricultural Research Service, intends to grant to Azure Waves Seafood, Inc., of Cincinnati, Ohio, an exclusive license for certain uses in the field of seafood breading and batters of U.S. Patent Application Serial No. 08/233,173, filed April 26, 1994, and U.S. Patent No. 5,676,994, issued October 14, 1997, both entitled, ''Non-Separable Starch-Oil Compositions,'' and U.S. Patent No. 5,882,713, issued March 16, 1999, entitled ''Non-Separable Compositions of Starch and Water-Immiscible Organic Materials,'' and their foreign equivalents. Notice of Availability for U.S. Patent Application No. 08/233,173 was published in the **Federal Register** on October 24, 1994; Patent No. 5,676,994 and Patent No. 5,882,713 are a continuation and continuation-in-part, respectively of Serial No. 08/233,173.

DATES: Comments must be received on or before May 30, 2000.

ADDRESSES: Send comments to: USDA, ARS, Office of the Director, National Center for Agricultural Utilization Research, Room 2042, 1815 N. University Street, Peoria, Illinois 61604.

FOR FURTHER INFORMATION CONTACT: Andrew Watkins of the National Center for Agricultural Utilization Research at

the Peoria address given above; telephone: 309–681–6545.

SUPPLEMENTARY INFORMATION: The Federal Government's patent rights to these inventions are assigned to the United States of America, as represented by the Secretary of Agriculture. It is in the public interest to so license these inventions as Azure Waves Seafood, Inc., has submitted a complete and sufficient application for a license. The prospective exclusive license will be royalty-bearing and will comply with the terms and conditions of 35 U.S.C. 209 and 37 CFR 404.7. The prospective exclusive license may be granted unless, within sixty (60) days from the date of this published Notice, the Agricultural Research Service receives written evidence and argument which establishes that the grant of the license would not be consistent with the requirements of 35 U.S.C. 209 and 37 CFR 404.7.

Richard M. Parry, Jr.,

Assistant Administrator.

[FR Doc. 00–7943 Filed 3–30–00; 8:45 am]

BILLING CODE 3410–03–P

DEPARTMENT OF AGRICULTURE

Natural Resources Conservation Service

Notice of Proposed Change to Section IV of the Field Office Technical Guide (FOTG) of the Natural Resources Conservation Service in Texas

AGENCY: Natural Resources Conservation Service (NRCS), Department of Agriculture.

ACTION: Notice of availability of proposed changes in Section IV of the FOTG of the NRCS in Texas for review and comment.

SUMMARY: It is the intention of the NRCS in Texas to issue a revised conservation practice standard in Section IV of the FOTG for the following practice: Nutrient Management (code 590).

DATES: Comments must be received on or before May 1, 2000.

FOR FURTHER INFORMATION CONTACT: Inquire in writing to John P. Burt, State Conservationist, Natural Resources Conservation Service (NRCS), 101 South Main Street, Temple, Texas 76501. Copies of the practice standard will be made available upon request.

SUPPLEMENTARY INFORMATION: Section 343 of the Federal Agriculture Improvement and Reform Act of 1996 states that revisions made after enactment of the law to NRCS State technical guides used to carry out highly erodible land and wetland provisions of the law shall be made available for public review and comment. For the next 30 days the NRCS will receive comments relative to the proposed changes. Following that period a determination will be made by the NRCS regarding disposition of those comments and a final determination of change will be made.

Dated: March 21, 2000.

John P. Burt,

State Conservationist, Temple, Texas 76501.

[FR Doc. 00–8027 Filed 3–30–00; 8:45 am]

BILLING CODE 3410–16–U

DEPARTMENT OF AGRICULTURE

Rural Business—Cooperative Service

Notice of Request for Extension of a Currently Approved Information Collection

AGENCY: Rural Business—Cooperative Service, USDA.

ACTION: Proposed collection; Comments requested.

SUMMARY: In accordance with the Paperwork Reduction Act of 1995, this notice announces the Rural Business-Cooperative Service's intention to request an extension for a currently approved information collection in support of the program for 7 CFR Part 1942–G Rural Business Enterprise Grants and Television Demonstration Grants.

DATES: Comments on this notice must be received by May 30, 2000 to be assured of consideration.

FOR FURTHER INFORMATION CONTACT: Carole Boyko, Rural Developmet Loan Specialist, Rural Business-Cooperative Service, USDA, Specialty Lenders Division, Stop 3325, 1400 Independence Avenue SW, Washington, DC 20250–3325. Telephone: (202) 720–0661.

SUPPLEMENTARY INFORMATION:

Title: RBS/Rural Business Enterprise Grants and Television Demonstration Grants.

OMB Number: 0570–0022.

Expiration Date of Approval: May 31, 2000.

Type of Request: Extension of a currently approved information collection.

Abstract: The objective of the RBEG program is to facilitate the development of small and emerging private businesses in rural areas. This purpose is achieved through grants made by RBS to public bodies and nonprofit corporations. Television Demonstration grants are available to private nonprofit public television systems to provide information on agriculture and other issues of importance to farmers and the rural residents. The regulations contain various requirements for information from the grantees, and some requirements may cause the grantees to require information from other parties. The information requested is vital for RBS to be able to process applications in a responsible manner, make prudent program decisions, and effectively monitor the grantees' activities to protect the Government's financial interest and ensure that funds obtained from the Government are used appropriately. It includes information used to determine eligibility; the specific purposes for which grant funds will be used; timeframes; who will be carrying out the grant purposes; project priority; applicant experience; employment improvement; and mitigation of economic distress.

Estimate of Burden: Public reporting burden for this collection of information is estimated to average 1.95 hours per response.

Respondents: Non-profit corporations, public bodies.

Estimated Number of Respondents: 720.

Estimated Number of Responses per Respondent: 28.94.

Estimated Total Annual Burden on Respondents: 40,650 hours.

Copies of this information collection can be obtained from Jean Mosley, Regulations and Paperwork Management Branch at (202) 692–0041.

Comments

Comments are invited on: (a) Whether the proposed collection of information is necessary for the proper performance of the functions of Rural Business-Cooperative Service, including whether the information will have practical utility; (b) the accuracy of Rural Business-Cooperative Service estimate of the burden of the proposed collection of information including the validity of the methodology and assumptions used; (c) ways to enhance the quality, utility and clarity of the information to be collected; and (d) ways to minimize the burden of the collection of information on those who are to respond, including through the use of appropriate automated, electronic, mechanical, or other technological collection techniques or other forms of information technology. Comments may be sent to Jean Mosley, Regulations and Paperwork Management Branch, U.S. Department of Agriculture, Rural Development, STOP 0742, 1400 Independence Ave. SW, Washington, DC 20250. All responses to this notice

will be summarized and included in the request for OMB approval. All comments will also become a matter of public record.

Dated: February 25, 2000.

Dayton J. Watkins,

Administrator, Rural Business—Cooperative Service.

[FR Doc. 00–7952 Filed 3–30–00; 8:45 am]

BILLING CODE 3410–XY–P

COMMITTEE FOR PURCHASE FROM PEOPLE WHO ARE BLIND OR SEVERELY DISABLED

Procurement List Additions and Deletions

AGENCY: Committee for Purchase From People Who Are Blind or Severely Disabled.

ACTION: Additions to and deletions from the procurement list.

SUMMARY: This action adds to the Procurement List services to be furnished by nonprofit agencies employing persons who are blind or have other severe disabilities, and deletes from the Procurement List a commodity and a service previously furnished by such agencies.

EFFECTIVE DATE: May 1, 2000.

ADDRESSES: Committee for Purchase From People Who Are Blind or Severely Disabled, Crystal Gateway 3, Suite 310, 1215 Jefferson Davis Highway, Arlington, Virginia 22202–4302.

FOR FURTHER INFORMATION CONTACT: Louis R. Bartalot (703) 603–7740.

SUPPLEMENTARY INFORMATION: On February 18, 2000, the Committee for Purchase From People Who Are Blind or Severely Disabled published notices (65 FR 8336 and 8337) of proposed additions to and deletions from the Procurement List:

Additions

After consideration of the material presented to it concerning capability of qualified nonprofit agencies to provide the services and impact of the additions on the current or most recent contractors, the Committee has determined that the services listed below are suitable for procurement by the Federal Government under 41 U.S.C. 46–48c and 41 CFR 51–2.4.

I certify that the following action will not have a significant impact on a substantial number of small entities. The major factors considered for this certification were:

1. The action will not result in any additional reporting, recordkeeping or other compliance requirements for small entities other than the small organizations that will furnish the services to the Government.

2. The action will not have a severe economic impact on current contractors for the services.

3. The action will result in authorizing small entities to furnish the services to the Government.

4. There are no known regulatory alternatives which would accomplish the objectives of the Javits-Wagner-O'Day Act (41 U.S.C. 46–48c) in connection with the services proposed for addition to the Procurement List.

Accordingly, the following services are hereby added to the Procurement List:

Document Image Conversion, U.S. Department of Housing & Urban Development Enforcement Center, Richard B. Russell Federal Building, 75 Spring Street, SW, Atlanta, Georgia.

Grounds Maintenance, Basewide, Marine Corps Air Station, Cherry Point, North Carolina.

Janitorial/Custodial, Portland Air Traffic Control Tower (ATCT) and Base Building, 7108 NE Airport Way, Portland, Oregon.

This action does not affect current contracts awarded prior to the effective date of this addition or options that may be exercised under those contracts.

Deletions

I certify that the following action will not have a significant impact on a substantial number of small entities. The major factors considered for this certification were:

1. The action may not result in any additional reporting, recordkeeping or other compliance requirements for small entities.

2. The action will not have a severe economic impact on future contractors for the commodity and service.

3. The action may result in authorizing small entities to furnish the commodity and service to the Government.

4. There are no known regulatory alternatives which would accomplish the objectives of the Javits-Wagner-O'Day Act (41 U.S.C. 46–48c) in connection with the commodity and service deleted from the Procurement List.

After consideration of the relevant matter presented, the Committee has determined that the commodity and service listed below are no longer suitable for procurement by the Federal Government under 41 U.S.C. 46–48c and 41 CFR 51–2.4.

Accordingly, the following commodity and service are hereby deleted from the Procurement List:

Commodity

Light-Marker, Distress (with pouch), 6230–00–067–5209, 6230–00–938–1778.

Service

Administrative Services, Defense Reutilization & Marketing Office, Building 4291, Fort Hood, Texas.

Louis R. Bartalot,

Deputy Director (Operations).

[FR Doc. 00–7990 Filed 3–30–00; 8:45 am]

BILLING CODE 6353–01–P

COMMITTEE FOR PURCHASE FROM PEOPLE WHO ARE BLIND OR SEVERELY DISABLED

Procurement List; Proposed Additions and Deletions

AGENCY: Committee for Purchase From People Who Are Blind or Severely Disabled.

ACTION: Proposed additions to and deletions from procurement list.

SUMMARY: The Committee has received proposals to add to the Procurement List commodities and services to be furnished by nonprofit agencies employing persons who are blind or have other severe disabilities, and to delete commodities and services previously furnished by such agencies.

COMMENTS MUST BE RECEIVED ON OR BEFORE: May 1, 2000.

ADDRESSES: Committee for Purchase From People Who Are Blind or Severely Disabled, Crystal Gateway 3, Suite 310, 1215 Jefferson Davis Highway, Arlington, Virginia 22202–4302.

FOR FURTHER INFORMATION CONTACT: Louis R. Bartalot (703) 603–7740.

SUPPLEMENTARY INFORMATION: This notice is published pursuant to 41 U.S.C. 47(a)(2) and 41 CFR 51–2.3. Its purpose is to provide interested persons an opportunity to submit comments on the possible impact of the proposed actions.

Additions

If the Committee approves the proposed additions, all entities of the Federal Government (except as otherwise indicated) will be required to procure the commodities and services listed below from nonprofit agencies employing persons who are blind or have other severe disabilities. I certify that the following action will not have a significant impact on a substantial

number of small entities. The major factors considered for this certification were:

1. The action will not result in any additional reporting, recordkeeping or other compliance requirements for small entities other than the small organizations that will furnish the commodities and services to the Government.
2. The action will result in authorizing small entities to furnish the commodities and services to the Government.
3. There are no known regulatory alternatives which would accomplish the objectives of the Javits-Wagner-O'Day Act (41 U.S.C. 46–48c) in connection with the commodities and services proposed for addition to the Procurement List. Comments on this certification are invited. Commenters should identify the statement(s) underlying the certification on which they are providing additional information.

The following commodities and services have been proposed for addition to Procurement List for production by the nonprofit agencies listed:

Commodities

Fossfill Pillows, M.R. 770, M.R. 771, M.R. 772, NPA: *Raleigh Lions Clinic for the Blind, Inc.,* Raleigh, North Carolina.

Sac Saver, M.R. 1010, NPA: Signature Works, Inc., Hazlehurst, Mississippi.

Blanket Set, Bed, 6545–00–911–1300, NPA: Ontario County Chapter, NYSARC Abbey Industries, Canandaigua, New York.

First Aid Kit, Gun Crew, 6545–00–920–7125, NPA: Ontario County Chapter, NYSARC Abbey Industries, Canandaigua, New York.

First Aid Kit, Small Craft 6545–00–168–6893 NPA: Ontario County, Chapter, NYSARC Abbey Industries, Canandaigua, New York.

Medical Equipment, 6545–01–191–8970, NPA: Ontario County Chapter, NYSARC Abbey Industries, Canandaigua, New York.

Medical Equipment, 6545–01–191–8971, NPA: Ontario County Chapter, NYSARC Abbey Industries, Canandaigua, New York.

Medical Equipment Set, Ground Ambulance, 6545–01–141–9476, NPA: Ontario County Chapter, NYSARC Abbey Industries, Canandaigua, New York.

Medical Equipment Set, Trauma, Field, 6545–01–191–8972, NPA: Ontario County Chapter, NYSARC Abbey Industries, Canandaigua, New York.

Field Pack, Firefighters, 8465–01–169–3996, NPA: Helena Industries, Inc., Helena, Montana.

Services

Janitorial/Custodial, Veterans Affairs Outpatient Clinic, 3420 Veterans Circle, Beaumont, Texas, NPA: Statewide Consolidated Community Development Corporation, Inc., Beaumont, Texas.

Janitorial/Custodial, Naval and Marine Corps Reserve Center, Fort Douglas, 116 Pollock Road, Salt Lake City, Utah, NPA: Community Foundation for the Disabled, Inc., Salt Lake City, Utah.

Deletions

I certify that the following action will not have a significant impact on a substantial number of small entities. The major factors considered for this certification were:

1. The action will not result in any additional reporting, recordkeeping or other compliance requirements for small entities.
2. The action will result in authorizing small entities to furnish the commodities and services to the Government.
3. There are no known regulatory alternatives which would accomplish the objectives of the Javits-Wagner-O'Day Act (41 U.S.C. 46–48c) in connection with the commodities and services proposed for deletion from the Procurement List.

The following commodities and services have been proposed for deletion from the Procurement List:

Commodities

Cleaning Compound, Windshield, 6850–00–926–2275.

Cleaning Compound, Rug and Upholstery, 7930–00–113–1913, 7930–01–393–6762, 7930–01–393–6757.

Trousers, Men's, Medical Assistant, 8405–00–110–8290, 8405–00–110–8291, 8405–00–110–8292, 8405–00–110–8293,8405–00–110–8294,8405–00–110–8295,8405–00–110–8296,8405–00–110–8297,8405–00–110–8298,8405–00–110–8299,8405–00–110–8301,8405–00–110–8302,8405–00–110–9468,8405–00–110–9469,8405–00–110–9470,8405–00–110–9471,8405–00–110–9472,8405–00–110–9473,8405–00–110–9474,8405–00–110–9475,8405–00–110–9476,8405–00–110–9477,8405–00–110–9478,8405–00–110–9479,8405–00–110–9480,8405–00–110–9481,8405–00–110–9482,8405–00–110–9483,8405–00–110–9484,8405–00–110–9485,8405–00–110–9486,8405–00–110–9487,8405–00–110–9488,8405–00–110–9489,8405–00–110–9490,8405–00–110–9697, 8405–00–113–5418,8405–00–008–8848.

Services

Administrative Services, Defense Reutilization and Marketing Office, Sheppard Building, Sheppard Air Force Base, Texas.

Food Service Attendant, Keyport Naval Undersea Warfare Center, Building 35, Keyport, Washington.

Janitorial/Custodial, U.S. Courthouse, 500 State Avenue, Kansas City, Kansas.

Janitorial/Custodial, Federal Building, 500 Quarrier Street, Charleston, West Virginia.

Mail and Messenger Service, U.S. Army Garrison-Fitzsimons, Aurora, Colorado.

Restocking Parts, Kelly Air Force Base, Texas.

Scrap Breakdown, Defense Reutilization and Marketing Office, Kelly Air Force Base, Texas.

Louis R. Bartalot,

Deputy Director (Operations).

[FR Doc. 00–7991 Filed 3–30–00; 8:45 am]

BILLING CODE 6353–01–P

DEPARTMENT OF COMMERCE

Submission for OMB Review; Comment Request

DOC has submitted to the Office of Management and Budget (OMB) for clearance the following proposal for collection of information under the provisions of the Paperwork Reduction Act (44 U.S.C. chapter 35).

Agency: U.S. Census Bureau.

Title: Census 2000 Evaluation: Response Process for Selected Language Groups.

Form Number(s): None.

Agency Approval Number: None.

Type of Request: New collection.

Burden: 1,667 hours.

Number of Respondents: 5,000.

Avg Hours Per Response: 20 minutes.

Needs and Uses: The Census Bureau would like to better understand how non-English speaking respondents cope with the census. The Census 2000 Evaluation of Response Process for Selected Language Groups will consist of a follow-up survey of census long form responding households that indicate Spanish, Vietnamese, or Russian is spoken at home. Questions asked in this follow-up survey will evaluate the respondents' awareness of the census in general, its purposes, the language assistance programs, and the respondents' use of such programs. Some of these programs include, but are not limited to, questionnaires and Be Counted forms in Spanish, Korean, Chinese, Tagalog, and Vietnamese; Questionnaire Assistance Centers (QACs), which provide Language Assistance Guides (LAGs) in 49 additional languages and some bilingual clerks; bilingual enumerators during follow-up operations; and Telephone Questionnaire Assistance (TQA) in Spanish, Korean, Chinese, Tagalog, and Vietnamese. Results from this study will help evaluate the effectiveness of the language assistance programs, and will help in the planning of the 2010 Census.

The follow-up survey will be conducted by telephone with specially trained bilingual interviewers. Approximately 4,500 cases will be drawn equally from each of the three language groups under study. Approximately 500 households that indicate only English is spoken at home will also be interviewed for comparison purposes. Half of the sample will be interviewed in early to mid-June, 2000, from the universe of households responding to the census through the mail, and half will be interviewed in early to mid-August, 2000, from the universe of households responding to the census through an enumerator.

Affected Public: Individuals or households.

Frequency: One time.

Respondent's Obligation: Voluntary.

Legal Authority: Title 13 USC, Sections 141 and 193.

OMB Desk Officer: Susan Schechter, (202) 395–5103.

Copies of the above information collection proposal can be obtained by calling or writing Linda Engelmeier, DOC Forms Clearance Officer, (202) 482–3272, Department of Commerce, room 5027, 14th and Constitution Avenue, NW, Washington, DC 20230 (or via the Internet at LEngelme@doc.gov).

Written comments and recommendations for the proposed information collection should be sent within 30 days of publication of this notice to Susan Schechter, OMB Desk Officer, room 10201, New Executive Office Building, Washington, DC 20503.

Dated: March 27, 2000.

Linda Engelmeier,

Departmental Forms Clearance Officer, Office of the Chief Information Officer.

[FR Doc. 00–8003 Filed 3–30–00; 8:45 am]

BILLING CODE 3510–07–P

DEPARTMENT OF COMMERCE

International Trade Administration

[A–201–805]

Circular Welded Non-Alloy Steel Pipe From Mexico: Extension of Time Limit for Final Results of Antidumping Duty Administrative Review

AGENCY: Import Administration, International Trade Administration, Department of Commerce.

EFFECTIVE DATE: March 31, 2000.

FOR FURTHER INFORMATION CONTACT: John Drury (202) 482–0195 or Charles Rast at (202) 482–1324, Import Administration, International Trade Administration, U.S. Department of Commerce, 14th Street and Constitution Ave, NW, Washington, D.C. 20230.

Time Limits

Statutory Time Limits

Section 751(a)(3)(A) of the Tariff Act of 1930, as amended (the Act), requires the Department to make a preliminary determination within 245 days after the last day of the anniversary month of an order/finding for which a review is requested and a final determination within 120 days after the date on which the preliminary determination is published. However, if it is not practicable to complete the review within these time periods, section 751(a)(3)(A) of the Act allows the Department to extend the time limit for the preliminary determination to a maximum of 365 days and for the final determination to 180 days (or 300 days if the Department does not extend the time limit for the preliminary determination) from the date of publication of the preliminary determination.

Background

On December 23, 1998, the Department published a notice of initiation of administrative review of the antidumping duty order on Circular Welded Non-Alloy Steel Pipe from Mexico covering the period November 1, 1997 through October 31, 1998 (63 FR 71091). On August 12, 1999, the Department published a notice of extension of the time limit for the preliminary results in this case to November 30, 1999 (64 FR 43982). On December 9, 1999, the Department published the preliminary results of review (64 FR 68995). The final results are currently due no later than April 7, 2000.

Extension of Time Limit for Preliminary Results of Review

We determine that it is not practicable to complete the preliminary results of this review within the original time limit. Therefore the Department is extending the time limit for completion of the final results until no later than June 6, 2000. See Decision Memorandum from Richard O. Weible to Joseph A. Spetrini, dated March 23, 2000, which is on file in the Central Records Unit, Room B–099 of the main Commerce building.

This extension is in accordance with section 751(a)(3)(A) of the Act.

Dated: March 23, 2000.

Richard O. Weible,

Acting Deputy Assistant Secretary, AD/CVD Enforcement, Group III.

[FR Doc. 00–8013 Filed 3–30–00; 8:45 am]

BILLING CODE 3510–DS–P

DEPARTMENT OF COMMERCE

International Trade Administration

[A–583–826]

Collated Roofing Nails From Taiwan: Rescission of Second Antidumping Duty Administrative Review

AGENCY: Import Administration, International Trade Administration, Department of Commerce.

ACTION: Notice of Rescission of the Second Antidumping Duty Administrative Review.

SUMMARY: On December 28, 1999, in response to a November 29, 1999, request made by Dinsen Fastening System, Inc., a producer/exporter of collated roofing nails from Taiwan, the Department of Commerce published the initiation of an administrative review of the antidumping duty order on collated roofing nails from Taiwan, covering the period November 1, 1998 through October 31, 1999. Since no other party requested a review, the Department is rescinding this review as a result of the timely withdrawal of the request for review by Dinsen Fastening System, Inc.

EFFECTIVE DATE: March 31, 2000.

FOR FURTHER INFORMATION CONTACT: Brian Smith or Brian Ledgerwood, AD/CVD Enforcement, Import Administration, International Trade Administration, U.S. Department of Commerce, 14th Street & Constitution Avenue, NW, Washington, DC 20230, telephone: (202) 482–1766 and (202) 482–3836, respectively.

SUPPLEMENTARY INFORMATION: Unless otherwise indicated, all citations to the statute are references to the provisions effective January 1, 1995, the effective date of the amendments made to the Tariff Act of 1930 (''the Act'') by the Uruguay Round Agreements Act. In addition, unless otherwise indicated, all citations to the Department of Commerce's (''the Department's'') regulations refer to 19 CFR part 351 (1999).

Background

On November 19, 1997, the Department published an antidumping duty order on collated roofing nails from Taiwan (62 FR 61730). On November 29, 1999, the above-mentioned producer/exporter requested an administrative review of the antidumping duty order on collated roofing nails from Taiwan covering the period of November 1, 1998, through October 31, 1999. In accordance with 19 CFR 351.221(c)(1)(i), we published the initiation of the review on December 28, 1999 (64 FR 72644). On February 3, 2000, Dinsen Fastening System, Inc. (''Dinsen'') withdrew its request for review.

Rescission of Review

The Department's regulations, at 19 CFR 351.213(d)(1), provide that the Department will rescind an administrative review if a party that requested the review withdraws its request within 90 days of the date of publication of the notice of initiation of

the requested review. Dinsen withdrew its request for an administrative review on February 3, 2000, which is within the 90-day deadline. Therefore, the Department has determined to rescind this administrative review with respect to Dinsen.

This notice also serves as a reminder to parties subject to administrative protective order (''APO'') of their responsibility concerning the disposition of proprietary information disclosed under APO in accordance with 19 CFR 351.305(a)(3). Timely written notification of the return or destruction of APO materials or conversion to judicial protective order is hereby requested. Failure to comply with the regulations and the terms of an APO is a sanctionable violation.

This determination is issued and published in accordance with 19 CFR 351.213(d)(4) and section 777(i) of the Act.

Dated: March 23, 2000.

Richard W. Moreland,

Deputy Assistant Secretary for Import Administration.

[FR Doc. 00–8014 Filed 3–30–00; 8:45 am]

BILLING CODE 3510–DS–P

DEPARTMENT OF COMMERCE

International Trade Administration

[A–570–851]

Certain Preserved Mushrooms From the People's Republic of China: Initiation of New Shipper Antidumping Duty Review

AGENCY: Import Administration, International Trade Administration, Department of Commerce.

SUMMARY: The Department of Commerce has received a request to conduct a new shipper review of the antidumping duty order on certain preserved mushrooms from the People's Republic of China. In accordance with 19 C.F.R. 351.214(d), we are initiating this review.

EFFECTIVE DATE: March 31, 2000.

FOR FURTHER INFORMATION CONTACT: David J. Goldberger or Katherine Johnson, Import Administration, International Trade Administration, Department of Commerce, 14th Street and Constitution Avenue, NW., Washington, D.C. 20230; telephone (202) 482–4136 or 482–4929, respectively.

Applicable Statute and Regulations

Unless otherwise indicated, all citations to the Tariff Act of 1930, as amended (''the Act''), are references to the provisions effective January 1, 1995, the effective date of the amendments made to the Act by the Uruguay Round Agreements Act. In addition, unless otherwise indicated, all citations to the Department of Commerce (''the Department'') regulations are to the provisions codified at 19 CFR part 351 (1999).

SUPPLEMENTARY INFORMATION:

Background

The Department has received a timely request from Raoping Xingyu Foods Co., Ltd. (''Raoping Xingyu''), in accordance with 19 CFR 351.214(c), for a new shipper review of the antidumping duty order on certain preserved mushrooms from the People's Republic of China (''PRC''), which has a February anniversary date. As required by 19 CFR 351.214(b)(2)(i) and (iii)(A), Raoping Xingyu (''the respondent'') has certified that it did not export certain preserved mushrooms to the United States during the period of investigation (''POI''), and that it has never been affiliated with any exporter or producer which exported certain preserved mushrooms during the POI. Raoping Xingyu further certified that its export activities are not controlled by the central government of the PRC, pursuant to 19 CFR 351.214(b)(2)(iii)(B). Pursuant to the Department's regulations at 19 CFR 351.214(b)(2)(iv), Raoping Xingyu submitted documentation establishing the date on which it first shipped the subject merchandise to the United States, the volume of that first shipment, and the date of its first sale to an unaffiliated customer in the United States.

In accordance with section 751(a)(2)(B) of the Act, as amended, and 19 CFR 351.214(b), and based on information on the record, we are initiating the new shipper review as requested.

It is the Department's usual practice in cases involving non-market economies to require that a company seeking to establish eligibility for an antidumping duty rate separate from the country-wide rate provide *de jure* and *de facto* evidence of an absence of government control over the company's export activities. Accordingly we will issue a separate rates questionnaire to the above-named respondent. If respondent Raoping Xingyu provides sufficient evidence that it is not subject to either *de jure* or *de facto* government control with respect to its exports of certain preserved mushrooms, this review will proceed. If, on the other hand, Raoping Xingyu does not meet its burden to demonstrate its eligibility for a separate rate, then Raoping Xingyu will be deemed to be affiliated with other companies that exported during the POI and that did not establish entitlement to a separate rate. This review will then be terminated due to failure of the exporter or producer to meet the requirements of section 751(a)(2)(B)(i)(II) of the Act and 19 CFR 351.214(iii)(B).

Initiation of Review

In accordance with section 751(a)(2)(B)(ii) of the Act and 19 CFR 351.214(d)(1), we are initiating a new shipper review of the antidumping duty order on certain preserved mushrooms from the PRC. On March 17, 2000, Raoping Xingyu agreed to waive the time limits in order that the Department, pursuant to 19 CFR 351.214(j)(3), may conduct this review concurrently with the first annual administrative review of this order, that is being conducted pursuant to section 751(a)(1) of the Act. Therefore, we intend to issue the final results of this review not later than 245 days after the last day of the anniversary month.

Antidumping duty proceeding	Period to be reviewed
PRC: Certain Preserved Mushrooms, A–570–851: Raoping Xingyu Foods Co., Ltd.	08/05/1998–01/31/2000

Based upon the receipt of an adequate separate rates questionnaire response from the respondent, we will instruct the U.S. Customs Service to allow, at the option of the importer, the posting of a bond or security in lieu of a cash deposit for each entry of the merchandise exported by the above-listed company until the completion of the review. This action is in accordance with 19 CFR 351.214(e) and (j)(3).

Interested parties that need access to the proprietary information in this new shipper review should submit applications for disclosure under administrative protective orders in accordance with 19 CFR 351.305 and 351.306.

This initiation and this notice are in accordance with section 751(a) of the

Act (19 U.S.C. 1675(a)) and 19 CFR 351.214(d).

Dated: March 27, 2000.

Richard W. Moreland,

Deputy Assistant Secretary for Import Administration.

[FR Doc. 00–8012 Filed 3–30–00; 8:45 am]

BILLING CODE 3510–DS–P

DEPARTMENT OF ENERGY

Federal Energy Regulatory Commission

[Docket No. RP00–221–000]

CNG Transmission Corporation; Notice of Proposed Changes in FERC Gas Tariff

March 27, 2000.

Take notice that on March 22, 2000, CNG Transmission Corporation (''CNG'') tendered for filing as part of its FERC Gas Tariff, First Revised Volume No. 1A, the tariff sheets listed on Attachment A to the filing. CNG requests an effective date of April 1, 2000 for its proposed tariff sheets.

CNG states that the purpose of the filing is to modify CNG's FERC Gas Tariff to reflect the reclassification of certain transmission lines to gathering and to correct certain administrative errors. Exhibit A is listing of the reasons for the addition, deletion or correction of the tariff.

CNG states that copies of its letter of transmittal and enclosures are being served upon its customers and to interested state commissions.

Any person desiring to be heard or to protest said filing should file a motion to intervene or a protest with the Federal Energy Regulatory Commission, 888 First Street, NE, Washington, DC 20426, in accordance with Sections 385.214 or 385.211 of the Commission's Rules and Regulations. All such motions or protests must be filed in accordance with Section 154.210 of the Commission's Regulations. Protests will be considered by the Commission in determining the appropriate action to be taken, but will not serve to make protestants parties to the proceedings. Any person wishing to become a party must file a motion to intervene. Copies of this filing are on file with the Commission and are available for public inspection in the Public Reference Room. This filing may be viewed on the web at http://www.ferc.fed.us/online/rims.htm (call 202–208–2222 for assistance).

David P. Boergers,

Secretary.

[FR Doc. 00–7941 Filed 3–30–00; 8:45 am]

BILLING CODE 6717–01–M

DEPARTMENT OF ENERGY

Federal Energy Regulatory Commission

[Docket No. RP00–83–003]

Texas Gas Transmission Corporation; Notice of Filing of Pro Forma Tariff Sheets

March 27, 2000.

Take notice that on March 22, 2000, Texas Gas Transmission Corporation (Texas Gas) tendered for filing as part of its FEERC Gas Tariff, First Revised Volume No. 1, the following pro forma tariff sheets to become effective January 14, 2000:

First Revised Sheet No. 79
Original Sheet No. 80
Original Sheet No. 80G
Original Sheet No. 80H

On November 29, 1999, Texas Gas filed proposed tariff sheets to establish a new Summer No-Notice Service (SNS). The Commission order issued January 12, 2000, suspended the effective date of those tariff sheets until June 14, 2000, subject to refund, the conditions set forth within the order, and the outcome of a technical conference. The pro forma tariff sheets submitted herein reflect changes to the SNS Rate Schedule, which Texas Gas agreed to as a result of the recent technical conference.

Texas Gas also requests withdrawal of the tariff sheets that were filed on March 10, 2000 in Docket No. RP00–83–002 and noticed by the Commission on March 15, 2000. Texas Gas states that the pro forma tariff sheets will replace and reflect the identical revisions previously filed on March 10, 2000.

Texas Gas states that copies of the revised tariff sheets are being mailed to all parties on the Commission's official service list as well as to Texas Gas's jurisdictional customers and interested state commissions.

Any person desiring to protest this filing should file a protest with the Federal Energy Regulatory Commission, 888 First Street, NE, Washington, DC 20426, in accordance with Section 385.211 of the Commission's Rules and Regulations. All such protests must be filed as provided in Section 154.210 of the Commission's Regulations. Protests will be considered by the Commission in determining the appropriate action to be taken, but will not serve to make Protestants parties to the proceedings. Copies of this filing are on file with the Commission and are available for public inspection in the Public Reference Room. This filing may be viewed on the web at http://www.ferc.fed.us/online/rims.htm) call 202–208–2222 for assistance).

David P. Boergers,

Secretary.

[FR Doc. 00–7940 Filed 3–30–00; 8:45 am]

BILLING CODE 6717–01–M

ENVIRONMENTAL PROTECTION AGENCY

[FRL–6569–3]

Agency Information Collection Activities: Proposed Collection; Comment Request; ICRs Planned To Be Submitted

AGENCY: Environmental Protection Agency (EPA).

ACTION: Notice.

SUMMARY: In compliance with the Paperwork Reduction Act (44 U.S.C. 3501 *et seq.*), this document announces that EPA is planning to submit the following 5 continuing Information Collection Requests (ICR) to the Office of Management and Budget (OMB). Before submitting the ICRs to OMB for review and approval, EPA is soliciting comments on specific aspects of the information collections as described at the beginning of Supplementary Information.

DATES: Comments must be submitted on or before May 30, 2000.

ADDRESSES: U.S. EPA, 1200 Pennsylvania Avenue, Mail Code 2223A, Washington, D.C. 20460. A hard copy of an ICR may be obtained without charge by calling the identified information contact individual for each ICR in section B of the Supplementary Information.

FOR FURTHER INFORMATION CONTACT: For specific information on the individual ICRs see section B of the Supplementary Information.

SUPPLEMENTARY INFORMATION:

For All ICRs

An Agency may not conduct or sponsor, and a person is not required to respond to, a collection information unless it displays a currently valid OMB control number. The OMB control numbers for EPA's regulations are displayed in 40 CFR part 9.

The EPA would like to solicit comments to:

(i) Evaluate whether the proposed collection of information is necessary for the proper performance of the functions of the Agency, including whether the information will have practical utility;

(ii) Evaluate the accuracy of the Agency's estimate of the burden of the proposed collection of information;

(iii) Enhance the quality, utility, and clarity of the information to be collected; and

(iv) Minimize the burden of the collection of information on those who are to respond, including through the use of automated collection techniques or other forms of information technology, *e.g.,* permitting electronic submission of responses.

Burden means the total time, effort, or financial resources expended by persons to generate, maintain, retain, or disclose or provide information to or for a Federal agency. This includes the time needed to review instructions; develop, acquire, install, and utilize technology and systems for the purposes of collecting, validating, and verifying information, processing and maintaining information, and disclosing and providing information; adjust the existing ways to comply with any previously applicable instructions and requirements; train personnel to be able to respond to a collection of information; search data sources; complete and review the collection of information; and transmit or otherwise disclose the information.

In general, the required information consists of emissions data and other information deemed not to be private. However, any information submitted to the Agency for which a claim of confidentiality is made will be safeguarded according to the Agency policies set forth in Title 40, Chapter 1, part 2, subpart B—Confidentiality of Business Information (see 40 CFR part 2; 41 FR 36902, September 1, 1976; amended by 43 FR 39999, September 8, 1978; 43 FR 42251, September 28, 1978; 44 FR 17674, March 23, 1979).

A. List of ICRs Planned To Be Submitted

In compliance with the Paperwork Reduction Act (44 U.S.C. 3501 *et seq.*), this document announces that EPA is planning to submit the following five continuing Information Collection Requests (ICR) to the Office of Management and Budget (OMB):

(1) NSPS Smelter Regulations Including: NSPS subpart M, Secondary Brass and Bronze Production Plants; NSPS Subpart P, Primary Copper Smelters; NSPS Subpart Q, Primary Zinc Smelters; NSPS Subpart R, Primary Lead Smelters; NSPS Subpart S; Primary Aluminum Production Plants; and NSPS Subpart Z, Ferroalloy Production Facilities. EPA ICR Number No.1604.06. OMB Control No. 2060–0110. Expiration date September 30, 2000.

(2) NSPS Subpart AAA; Standards of Performance for New Stationary Sources, New Residential Wood Heaters. EPA ICR Number 1176. OMB Control Number 2060–0161. Expiration Date: September 30, 2000.

(3) NSPS Subpart SSS, Magnetic Tape Coating Facilities. EPA ICR Number 1135. OMB Control Number 2060–0171. Expiration Date: September 30, 2000.

(4) MACT subpart DDD, Mineral Wool Production. EPA ICR No. 1799, OMB Control No. 2060–0362. Expiration Date: July 31, 2000.

(5) MACT subpart GGG; Pharmaceuticals Production. EPA ICR No. 1781.01. OMB Control No. 2060–0357. Expiration Date: July 31, 2000.

B. Contact Individuals for ICRs

(1) NSPS Smelter Regulations Including: NSPS subpart M, Secondary Brass and Bronze Production Plants; NSPS Subpart P, Primary Copper Smelters; NSPS Subpart Q, Primary Zinc Smelters; NSPS Subpart R, Primary Lead Smelters; NSPS Subpart S; Primary Aluminum Production Plants; and NSPS Subpart Z, Ferroalloy Production Facilities. Deborah Thomas at (202) 564–5041 or via E-mail at *thomas.deborah@epa.gov.* EPA ICR Number No. 1604.06. OMB Control No. 2060–0110. Expiration Date: September 30, 2000.

(2) NSPS Subpart AAA, New Residential Wood Heaters. Bob Marshall at (202) 564–7021 or via e-mail at *marshall.robert@epa.gov.* EPA ICR Number 1176. OMB Control Number 2060–0161. Expiration Date: September 30, 2000.

(3) NSPS Subpart SSS, Magnetic Tape Coating Facilities. Anthony Raia at (202) 564–6045 or via e-mail at raia.anthony@epa.gov. EPA ICR Number 1135. OMB Control Number 2060–0171. Expiration Date: September 30, 2000.

(4) MACT subpart DDD, Mineral Wool Production. Gregory Fried at (202) 564–7016/(202) 564–0050 (fax) or via e-mail at *fried.gregory@epa.gov.* OMB Control No. 2060–0362, EPA ICR No. 1795. Expiration Date: July 31, 2000.

(5) MACT subpart GGG; Pharmaceuticals Production. Marcia B. Mia, phone number, 202–564–7042; facsimile, 202–564–0009; or by e-mail at mia.marcia@epamail.epa.gov. EPA ICR No. 1781.01. OMB Control No. 2060–0357. Expiration Date: July 31, 2000.

C. Individual ICRs

Smelters

(1) NSPS Smelter Regulations Including: NSPS subpart M, Secondary Brass and Bronze Production Plants; NSPS Subpart P, Primary Copper Smelters; NSPS Subpart Q, Primary Zinc Smelters; NSPS Subpart R, Primary Lead Smelters; NSPS Subpart S; Primary Aluminum Production Plants; and NSPS Subpart Z, Ferroalloy Production Facilities. EPA ICR Number No. 1604.06. OMB Control No. 2060–0110. Expiration date: September 30, 2000.

This ICR will combine the ICRs for several related smelter ICRs. The EPA number and OMB number for NSPS subpart M, Brass and Bronze will be retained for the entire collection.

Brass and Bronze

Affected Entities: Entities potentially affected by this action are Secondary Brass and Bronze Production Plants that commenced construction, modification, or reconstruction after the date of proposal (June 11, 1973). Specifically, the affected facilities in each brass and bronze plant are any reverberatory and electric furnaces of 1,000 kg (2205 lb) or greater production capacity and blast (cupola) furnaces of 250 kg/h (550 lb/h) or greater production capacity. This subpart does not apply to furnaces from which molten brass or bronze are cast into the shape of finished products, such as foundry furnaces.

Abstract: Secondary brass and bronze production plants emit metallic particulate matter in quantities that, in the Administrator's judgement, cause or contribute to air pollution that may endanger public health or welfare. Consequently, New Source Performance Standards were promulgated for this source category. These standards rely on the proper installation, operation and maintenance of particulate control devices such as fabric filters or electrostatic precipitators.

In order to ensure compliance with the standards, adequate recordkeeping and reporting is necessary. This information enables the Agency to: (1) Identify the sources subject to the standard; (2) ensure initial compliance with emission limits; and (3) verify continuous compliance with the standard. Specifically, the rule requires an application for approval of construction, notification of startup, notification and report of the initial emissions test, and notification of any physical or operational change that may increase the emission rate. In addition, sources are required to keep records of all startups, shutdowns, and malfunctions.

In the absence of such information collection requirements, enforcement personnel would be unable to determine whether the standards are being met on a continuous basis, as required by the Clean Air Act. Consequently, these information collection requirements are mandatory, and the records required by this NSPS must be retained by the owner or operator for two years.

Industry Burden Statement: In the previously approved ICR, the average annual burden to industry to meet these record-keeping and reporting requirements was estimated at 7.5 person-hours. This is based on an estimated 5 respondents. This is because virtually all reporting requirements apply to new facilities only, and no new facilities at secondary brass or bronze plants are expected to be constructed over the next three years. There is a chance that some existing facility might need to report a physical or operational change; however, these reports are very rare, and might only involve one facility over the three-year period.

Primary Copper Smelters, Primary Zinc Smelters, and Primary Lead Smelters

Affected Entities: Entities potentially affected by this action are Primary Copper Smelters, Primary Lead Smelters, and Primary Zinc Smelters that commenced construction, modification, or reconstruction after the date of proposal (October 16, 1974). The affected facilities in each primary copper smelter are each dryer, roaster, smelting furnace or copper converter. The affected facilities in each primary lead smelter are each sintering machine, sintering machine discharge end, blast furnace, dross reverberatory furnace, electric smelting furnace and converter. The affected facilities in each primary zinc smelter are each roaster and sintering machine.

Abstract: Primary copper, lead and zinc smelters emit metallic particulate matter and sulfur dioxide in quantities that, in the Administrator's judgement, cause or contribute to air pollution that may endanger public health or welfare. Consequently, New Source Performance Standards were promulgated for this source category. These standards rely on the proper installation, operation and maintenance of particulate control devices such as scrubbers or electrostatic precipitators.

In order to ensure compliance with the standards, adequate recordkeeping and reporting is necessary. This information enables the Agency to: (1) Identify the sources subject to the standard; (2) ensure initial compliance with emission limits; and (3) verify continuous compliance with the standard. Specifically, the rule requires an application for approval of construction, notification of startup, notification and report of the initial emissions test, and notification of any physical or operational change that may increase the emission rate. In addition, sources are required to keep daily records of average sulphur dioxide concentrations, and records of all startups, shutdowns, and malfunctions. Excess emissions must be reported semi-annually. For copper smelters only, owners or operators must keep monthly records of the smelter charge rate and weight percent (dry basis) of arsenic, antimony, lead and zinc.

In the absence of such information collection requirements, enforcement personnel would be unable to determine whether the standards are being met on a continuous basis, as required by the Clean Air Act. Consequently, these information collection requirements are mandatory, and the records required by this NSPS must be retained by the owner or operator for two years.

Industry Burden Statement: In the previously approved ICR, the average annual burden to industry to meet these recordkeeping and reporting requirements was estimated at 1445 person-hours. This is based on an estimated 15 respondents. No new smelters are expected to be constructed over the next three years. The estimate includes daily and monthly recordkeeping as well as records of startup, shutdown, and malfunction events, Since there are no new sources anticipated, the only reporting burden for this industry is the semi-annual reporting of excess emissions which is estimated at 8 hours per report.

Aluminum Reduction Plants

Affected Entities: Entities potentially affected by this action are Primary Aluminum Production Plants that commenced construction, modification, or reconstruction after the date of proposal (October 23, 1974). The affected facilities in each aluminum production plant are potroom groups and anode bake plants.

Abstract: Primary aluminum reduction plants emit gaseous hydrogen fluoride and particulate fluorides, alumina, carbon monoxide, volatile organic compounds and sulfur dioxide in quantities that, in the Administrator's judgement, cause or contribute to air pollution that may endanger public health or welfare. Consequently, New Source Performance Standards were promulgated for this source category. These standards rely on the proper installation, operation and maintenance of particulate control devices such as scrubbers or electrostatic precipitators.

In order to ensure compliance with the standards, adequate recordkeeping and reporting is necessary. This information enables the Agency to: (1) Identify the sources subject to the standard; (2) ensure initial compliance with emission limits; and (3) verify continuous compliance with the standard. Specifically, the rule requires an application for approval of construction, notification of startup, notification and report of the initial emissions test, and notification of any physical or operational change that may increase the emission rate. In addition, sources are required to keep records of all startups, shutdowns, and malfunctions.

In the absence of such information collection requirements, enforcement personnel would be unable to determine whether the standards are being met on a continuous basis, as required by the Clean Air Act. Consequently, these information collection requirements are mandatory, and the records required by this NSPS must be retained by the owner or operator for two years.

Industry Burden Statement: In the previously approved ICR, the average annual burden to industry to meet these recordkeeping and reporting requirements was estimated at 4,365 person-hours. This is based on an estimated 6 respondents. No new plants or potlines are expected to be constructed over the next three years.

Ferroalloy Production Plants

Affected Entities: Entities potentially affected by this action are Ferroalloy Production Facilities that commenced construction, modification, or reconstruction after the date of proposal (October 21, 1974). The affected facilities in each ferroalloy production plant are: electric submerged arc furnaces that produce silicon metal, ferrosilicon, calcium silicon, silicomanganese zirconium, ferrochrome silicon, silvery iron, high-carbon ferrochrome, charge chrome, standard ferromanganese, silicomanganese, ferromanganese silicon, or calcium carbide; and dust-handling equipment.

Abstract: Ferroalloy Production Facilities emit particulate matter and carbon monoxide in quantities that, in the Administrator's judgement, cause or contribute to air pollution that may endanger public health or welfare. Consequently, New Source Performance Standards were promulgated for this source category. These standards rely on the proper installation, operation and maintenance of particulate control

devices such as scrubbers, filters or electrostatic precipitators.

In order to ensure compliance with the standards, adequate recordkeeping and reporting is necessary. This information enables the Agency to: (1) Identify the sources subject to the standard; (2) ensure initial compliance with emission limits; and (3) verify continuous compliance with the standard. Specifically, the rule requires an application for approval of construction, notification of startup, notification and report of the initial emissions test, and notification of any physical or operational change that may increase the emission rate. In addition, sources are required to keep daily records of operating parameters and records of all startups, shutdowns, and malfunctions.

In the absence of such information collection requirements, enforcement personnel would be unable to determine whether the standards are being met on a continuous basis, as required by the Clean Air Act. Consequently, these information collection requirements are mandatory, and the records required by this NSPS must be retained by the owner or operator for two years.

Industry Burden Statement: In the previously approved ICR, the average annual burden to industry to meet these record-keeping and reporting requirements was estimated at 177 person-hours. This is based on an estimated 1 respondent. No new plants are expected to be constructed over the next three years. There is no anticipated reporting burden for this industry over the next three years as a result of these standards.

New Residential Wood Heaters

(2) NSPS Subpart AAA; Standards of Performance for New Stationary Sources, New Residential Wood Heaters. EPA ICR Number 1176. OMB Control Number 2060–0161. Expiration Date: September 30, 2000.

Affected entities: Entities potentially affected by this action are those which manufacture or sell new residential wood heaters.

Abstract: Information is supplied to the Agency under the applicable rule by emission testing laboratories, manufacturers and commercial owners (*e.g.,* distributors, retailers).

The information supplied by manufacturers to the Agency is used: (1) To ensure that the best demonstrated technology is being used to reduce emissions from wood heaters; (2) to ensure that the wood heater tested for certification purposes is in compliance with the applicable emission standards; (3) to provide evidence that production-line wood heaters have emission performance characteristics similar to tested models and; (4) to provide assurance of continued compliance.

Manufacturers submit a notification to the Agency stating the dates of certification testing, perform the certification testing at an accredited laboratory, supply detailed component drawings including manufacturing tolerances to the Agency, reapply for certification every five years, seal/store each tested model and maintain all necessary certification test records.

For each certified model line, manufacturers are required to: (1) Submit biennially, a statement certifying that no material or dimensional changes have been made to the model line that affects emission performance; (2) affix both permanent and temporary labels to each new wood heater manufactured; (3) disclose, to the consumer, instructions for operation and maintenance of the wood heater; (4) notify the Agency that a quality assurance emission test will be conducted within one week of the mailing; (5) maintain, for each model line, records of certification test reports including raw field, laboratory, and instrument calibration data; (6) perform and document quality assurance parameter inspections conducted on assembly-line wood heaters; (7) perform and document emission audit tests performed on assembly-line wood heaters; (8) maintain records of the quantity and model type of wood heaters produced and sold; (9) maintain records and storage locations of all wood heaters exempt from certification requirements; and (10) retain for the life of the model line wood heater units tested for certification purposes.

Emission testing laboratories seeking accreditation are required to: (1) Apply to the Agency for accreditation before conducting certification tests; (2) pass a standardized proficiency test; and (3) notify the Agency prior conducting the required test.

The regulation requires currently accredited laboratories to: (1) Participate in proficiency test programs on an annual basis, (2) report within ten days the results of random compliance audits in the form of a preliminary test report, (3) report to the Agency the failure of any manufacturer to submit a wood heater for testing, (4) report any interruptions or postponements in the testing schedule and advise the Agency of the new testing date; (5) retain all certification test records and documentation; (6) retain all certification test records and associated documentation.

Commercial owners are required to maintain records of previous owners of wood heaters to enable the Agency to confirm whether the stove should be categorized as a used stove or an affected facility.

Most recordkeeping and reporting provisions of the rule consists of emissions-related data and other information not considered confidential. However, the confidentiality of certain information obtained by the Agency is safeguarded according to Agency policies set forth in Title 40, Chapter 1, part 2, subpart B—Confidentiality of Business Information (see 40 CFR part 2; 41 FR 36902, September 1, 1976: amended by 43 FR 3999, September 8, 1978; 43 FR 42251, September 20, 1987; 44 FR 17674, March 23, 1979).

Industry Burden Statement: As of August 31, 1997, there were an estimated 50 wood manufacturers producing approximately 150,000 wood heaters per year under approximately 200 certified model lines. On average, a manufacturer produced four model lines. Each manufacturer produced an average of 3,000 wood heaters per year (150,000 wood heaters/50 manufacturers), and approximately 750 wood heaters for each certified model line (3,000 wood heaters/4 model lines).

In the referenced ICR, the total recordkeeping and reporting burden for this industry equaled 7,653 person-hours per year with laboratories incurring approximately 20 percent of the total; manufacturers, 75 percent; and commercial owners, 5 percent.

The person-hours required by manufacturers, as a group, for those activities associated with labeling and inspections is 3,325 hours/year. Activities associated with the certification of new wood heater model lines, as a group, required about 1,732 hours per year; and the research stoves report, the retained stoves report and biennial reports, as a group, take an estimated 682 hours per year.

Laboratories, as a group, are required to invest approximately 732 hours per year to obtain and maintain their accreditation, and 832 hours per year documenting certification test runs.

Commercial owners (*i.e.,* retail establishments), as a group, that sell wood heaters to the general public spend approximately 350 hours per hours maintaining the required used-stove records.

The industry expense to perform the above recordkeeping and reporting each year is estimated to be $1,348,000. This is comprised of two components: (1) The annual capital/startup costs and (2) the annual reporting and recordkeeping costs.

The total annualized capital/startup costs total approximately $528,000, and consist of the following for manufacturers; (1) certification test notification ($4,465), (2) certification test ($498,750), (3) application for certification ($18,625); and the following for laboratory accreditation: (1) application for accreditation ($1,400), (2) proficiency test ($4,726), and (3) notice of proficiency test ($35).

The annual operation and maintenance (O & M) costs total $820,000 and consist of the following for manufacturers: (1) Biennial reporting for certified model lines ($1,750), (2) cost of permanent labels ($300,000), (3) cost of temporary labels ($156,087), (4) cost of owner's manual ($35,010), (5) quality assurance emission test notification ($2,800), (6) test documentation and emissions test ($171,068), (7) quality assurance parameter inspections ($70,020), (8) research stove reports, retained stoves recordkeeping ($22,126). For laboratories, the O & M cost include: (1) the annual proficiency test ($18,905), (2) rescheduling of the proficiency test ($560), and (3) records of the certification test runs performed ($29,128). For commercial owners, the recordkeeping costs are estimated to be ($12,253).

The costs to the respondents are based on average salary rate of $16.23 per hour plus 110 percent overhead (*i.e.,* total of $34.08 per hour).

Magnetic Tape Coating Facilities

(3) NSPS Subpart SSS, Magnetic Tape Coating Facilities. EPA ICR Number 1135. OMB Control Number 2060–0171. Expiration Date: September 30, 2000.

Affected entities: Entities potentially affected by this action are those magnetic tape manufacturing facilities (which perform each coating operations) for which construction, modification or reconstruction commenced after January 22, 1986.

Abstract: The Administrator has judged that VOC emissions from magnetic tape coating facilities cause or contribute to air pollution that may reasonably be anticipated to endanger public health or welfare. Owners/operators of magnetic tape coating facilities must notify EPA of construction, modification, startups, shut downs, date and results of initial performance test and provide semiannual reports of excess emissions. In order to ensure compliance with the standards promulgated to protect public health, adequate reporting and recordkeeping is necessary. In the absence of such information enforcement personnel would be unable to determine whether the standards are being met on a continuous basis, as required by the Clean Air Act.

Industry Burden Statement: The annual public reporting and recordkeeping burden for this collection of information is estimated to average 3982.2 hours. The total annualized cost burden for this collection of information is estimated to be $139,377. The proposed frequency of response is 2, and the estimated number of likely respondents is 14.

(4) MACT subpart DDD, Mineral Wool Production. EPA ICR No. 1799, OMB Control No. 2060–0362, Expiration Date: July 31, 2000.

Affected Entities: Entities potentially affected by this action are mineral wool production facilities that emit or have the potential to emit any single HAP at a rate of 10 tons or more per year or any combination of HAPs at a rate of 25 tons or more per year. The rule applies to each cupola and/or curing oven at these facilities and to any new, modified, or reconstructed facilities.

Abstract: The MACT for mineral wool production was proposed on May 8, 1997 and promulgated on June 1, 1999. Owners or operators of mineral wool production facilities are required to comply with the notification, reporting, and recordkeeping requirements for MACT standards in the NESHAP general provisions (40 CFR part 63, subpart A). The general provisions require: (1) Initial notifications (*e.g,* notification of applicability, notification of performance test, and notification of compliance status); (2) monitoring plans (*e.g.,* an operations, maintenance, and monitoring plan, a startup, shutdown, and malfunction plan, and a quality improvement plan); (3) a report of performance test results; and (4) semiannual reports of deviations from established parameters. When deviation in operating parameters established during performance testing are reported, the owner or operator must report quarterly until a request to return to semiannual reporting is approved by the Administrator.

In addition to the requirements of the general provisions, subpart DDD requires owners or operators to install fabric filter bag leak detection systems and initiate corrective action procedures in the event of an operating problem. The rule also requires owners or operators to continuously monitor and record the operating temperature of each thermal incinerator. Additionally, owners or operators are required to continuously monitor and record the cupola production (melt) rate, and for facilities with affected curing ovens, monitor and record the formaldehyde content of each binder formulation used to manufacture bonded products. The NESHAP general provisions (40 CFR part 63, subpart A) requires that records be maintained for at least 5 years from the date of each record. The owner or operator must retain the records onsite for at least 2 years but may retain the records offsite for the remaining 3 years. The files may be retained on microfilm, on microfiche, on a computer, on computer disks, or on magnetic tape disks. Reports may be made on paper or on a labeled computer disk using commonly available and EPA-compatible computer software.

Burden Statement: There are 14 facilities subject to this standard. The total annual hours are estimated to be 6,107 or approximately 436 hours per facility. The total annual cost is estimated to be $196,206 or approximately $14,015 per facility per year. The following is a breakdown of burden used in this ICR. EPA estimated a 2-hour burden for notification of applicability and notification of the date of the performance test, and a 4-hour burden for the notification of compliance status. EPA estimated a 40-hour burden for each of the following plans: a startup, shutdown, and malfunction plan; an operations, maintenance, and monitoring plan; and a quality improvement plan. EPA also estimated an 16-hour burden for excess emission reports and 8-hour burdens for both startup, shutdown, and malfunction reports and reports of no excess emissions.

EPA estimated a 577-hour burden for initial performance tests and assumed that 20% of all affected facilities would require retests. Finally, EPA estimated that it would take 4½ hours to record all information required by the standard.

The total capital costs associated with monitoring equipment for 14 facilities are estimated at $309,400. This corresponds to an annual capital cost of $14,700 per year over the first 3 years. Annual operations and maintenance costs are estimated to be $5,700 per year over the first 3 years.

(5) MACT subpart GGG; Pharmaceuticals Production. EPA ICR No. 1781.01. OMB Control No. 2060–0357. Expiration Date July 31, 2000.

Affected entities: Entities potentially affected by this action are those which manufacture a pharmaceutical product; are located at a plant site that is a major source as defined in section 112(a) of the Act; and process, use or produce HAP. The standard applies to new and existing sources.

Abstract: This ICR contains recordkeeping and reporting

requirements that are mandatory for compliance with 40 CFR 63.1250–63.1261, hazardous air pollutant emissions from process vents, storage vessels, wastewater systems and equipment leaks. The standards require recordkeeping and reporting to document process information related to the source's ability to comply with the standards. This information is used by the Agency to identify sources subject to the standards and to insure that the maximum achievable control is being properly applied. Respondents are owners or operators of new and existing facilities that manufacture pharmaceuticals at major sources and that use, produce or process hazardous air pollutants. Section 112 of the Clean Air Act, as amended in 1990, requires that EPA establish standards to limit emissions of hazardous air pollutants (HAPs) from stationary sources. The sources subject to these provisions emit the HAPs methanol and methylene chloride, predominately. In the Administrator's judgment, hazardous air pollutant (HAP) emissions in this industry cause or contribute to air pollution that may be reasonably anticipated to endanger public health or welfare. Therefore, NESHAPs have been promulgated for this source category as required under section 112 of the Clean Air Act.

Industry Burden Statement: There are approximately 101 facilities which must comply with these provisions. The average burden per facility per year is estimated to be 694 hours. This includes the burden for daily wastewater monitoring, and additional hours for recordkeeping, reporting and notifications related to compliance status, leak detection and repair, startup/shutdown and malfunction events, process changes, emissions exceedances, and construction/reconstruction and startups. Because this is not a new information collection, it assumes that most facilities will have already developed the recordkeeping and reporting mechanisms to maintain and report the required data except for process additions or changes. It should be noted that the Agency is not anticipating any changes in burden as the result of the settlement discussions and language changes to the rule as an outcome of the settlement with the Pharmaceutical and Research Manufacturers Association (PhRMA) and the Chemical Manufacturers Association (CMA). Those changes will be proposed in a later **Federal Register** document.

Dated: March 23, 2000.

Michael Stahl,

Acting Director, Office of Compliance.

[FR Doc. 00–7996 Filed 3–30–00; 8:45 am]

BILLING CODE 6560–50–P

ENVIRONMENTAL PROTECTION AGENCY

[FRL–6569–8]

Agency Information Collection Activities: Submission for OMB Review; Comment Request; Application Requirements for the Approval and Delegation of Federal Air Toxics Programs to State, Territorial, Local and Tribal Agencies

AGENCY: Environmental Protection Agency (EPA).

ACTION: Notice.

SUMMARY: In compliance with the Paperwork Reduction Act (44 U.S.C. 3501 *et seq.*), this document announces that the following Information Collection Request (ICR) has been forwarded to the Office of Management and Budget (OMB) for review and approval: Application Requirements for the Approval and Delegation of Federal Air Toxics Programs to State, Territorial, Local and Tribal Agencies, OMB Control No. 2060–0264, ICR no. 1643.04, expiration date 03/31/2000. The ICR describes the nature of the information collection and its expected burden and cost; where appropriate, it includes the actual data collection instrument.

DATES: Comments must be submitted on or before May 1, 2000.

FOR FURTHER INFORMATION CONTACT: For a copy of the ICR contact Sandy Farmer at EPA by phone at (202) 260–2740, by email at farmer.sandy@epamail.epa.gov, or download off the Internet at http://www.epa.gov/icr and refer to EPA ICR No. 1643.04. For technical questions about the ICR contact Ms. Holly Reid, (919) 541–5344, or electronic mail at reid.holly@epa.gov.

SUPPLEMENTARY INFORMATION:

Title: Application Requirements for the Approval and Delegation of Federal Air Toxics Programs to State, Territorial, Local and Tribal Agencies (OMB Control No. 2060–0264, EPA ICR No. 1643.04) expiring 03/31/2000. This is a request for extension of a currently approved collection.

Abstract: A rule developed under the authority of section 112 of the Clean Air Act, as amended in 1990, calls for us, EPA, to ''publish guidance that would be useful to States [also Territorial, local and Tribal agencies (S/L/T)] in developing programs * * * allowing for delegation of the Administrator's authorities and responsibilities to implement and enforce emissions standards and prevention requirements.'' The intent of this voluntary program is to encourage S/L/T to accept delegation of the Federal section 112 standards, and to allow them to adjust or substitute S/L/T requirements when they can be shown to be at least as stringent as the Federal requirements. These provisions for alternatives will help preserve existing S/L/T programs and prevent dual regulation of sources.

The ICR reflects the approval process codified in 40 CFR 63, subpart E, which we proposed to amend on January 12, 1999 (64 FR 1880). Under the amended process, the S/L/T can select one of five delegation options to implement and enforce the Federal section 112 rule, requirement, or program.

This collection of information is authorized under 42 U.S.C. 7401–7671q. We will safeguard any information we obtain for which a claim of confidentiality is made according to our policies outlined in title 40, chapter 1, part 2, subpart B, Confidentiality of Business Information.

Note that an agency may not conduct or sponsor, and a person is not required to respond to, a collection of information unless it displays a currently valid OMB control number. The OMB control numbers for EPA's regulations are listed in 40 CFR part 9 and 48 CFR Chapter 15. The **Federal Register** document required under 5 CFR 1320.8(d), soliciting comments on this collection of information, was published on October 29, 1999 (64 FR 58401); no comments were received.

Burden Statement: The annual public reporting and recordkeeping burden for this collection of information is estimated to average 29 hours per response. Burden means the total time, effort, or financial resources expended by persons to generate, maintain, retain, or disclose or provide information to or for a Federal agency. This includes the time needed to review instructions; develop, acquire, install, and utilize technology and systems for the purposes of collecting, validating, and verifying information, processing and maintaining information, and disclosing and providing information; adjust the existing ways to comply with any previously applicable instructions and requirements; train personnel to be able to respond to a collection of information; search data sources; complete and review the collection of information; and transmit or otherwise disclose the information.

Respondents/Affected Entities: 127.

Estimated Number of Respondents: 127.

Frequency of Response: 4,555.

Estimated Total Annual Hour Burden: 130,198 hours.

Estimated Total Annualized Capital and Operating & Maintenance Cost Burden: $5.3.

Send comments on the Agency's need for this information, the accuracy of the provided burden estimates, and any suggested methods for minimizing respondent burden, including through the use of automated collection techniques to the following addresses. Please refer to EPA ICR No. 1643.04 and OMB Control No. 2060–0264 in any correspondence.

Ms. Sandy Farmer, U.S. Environmental Protection Agency, Office of Environmental Information, Collection Strategies Division (2822), 1200 Pennsylvania Ave., NW, Washington, DC 20460;

and

Office of Information and Regulatory Affairs, Office of Management and Budget, Attention: Desk Officer for EPA, 725 17th Street, NW, Washington, DC 20503.

Dated: March 20, 2000.

Oscar Morales,

Director, Collection Strategies Division.

[FR Doc. 00–7994 Filed 3–30–00; 8:45 am]

BILLING CODE 6560–50–P

ENVIRONMENTAL PROTECTION AGENCY

[FRL–6568–7]

Approval oOf Section 112(l) Delegation of Maximum Achievable Control Technology Standards; Indiana

AGENCY: Environmental Protection Agency (EPA).

ACTION: Notice.

SUMMARY: The purpose of this notice is to announce that EPA is approving a request for delegation of the Maximum Achievable Control Technology (MACT) standards for gasoline distribution, organic hazardous air pollutants, off-site waste recovery operations, and primary aluminum reduction (*i.e.,* 40 CFR Part 63, Subparts R, F, G, H, I, DD, and LL, respectively) pursuant to section 112(l) of the Clean Air Act (CAA). The State's mechanism of delegation involves State rule adoption of all existing and future section 112 standards unchanged from the Federal standards. The actual delegation of authority of individual standards was a letter from EPA to the Indiana Department of Environmental Management (IDEM) dated January 6, 2000.

DATES: This action will become effective January 6, 2000.

ADDRESSES: Copies of the State's submittal and other supporting information used in developing the approval are available for inspection during normal business hours at the following location:

EPA Region 5, 77 West Jackson Boulevard, AR–18J, Chicago, Illinois, 60604.

Please contact Sam Portanova at (312) 886–3189 to arrange a time if inspection of the submittal is desired.

FOR FURTHER INFORMATION CONTACT: Sam Portanova, AR–18J, 77 West Jackson Boulevard, Chicago, Illinois 60604, (312) 886–3189.

SUPPLEMENTARY INFORMATION:

I. What Action Is EPA Taking Today?

EPA is notifying the public that delegation of the authority to implement and enforce the MACT standards for gasoline distribution, hazardous organic national emission standard for hazardous air pollutants, off-site waste recovery operations, and primary aluminum reduction was approved in a letter from EPA to IDEM dated January 6, 2000.

All notifications, reports and other correspondence required under section 112 standards should be sent to the State of Indiana rather than to the EPA, Region 5, in Chicago. Affected sources should send this information to: Indiana Department of Environmental Management, Office of Air Management, 100 North Senate Avenue, P.O. Box 6015, Indianapolis, Indiana 46206–6015.

II. EPA is Approving the Delegation Under What Authority?

Section 112(l) of the CAA enables the EPA to approve State air toxics programs or rules to operate in place of the Federal air toxics program. The Federal air toxics program implements the requirements found in section 112 of the CAA pertaining to the regulation of hazardous air pollutants. Approval of an air toxics program is granted by the EPA if the Agency finds that the State program: (1) Is ''no less stringent'' than the corresponding Federal program or rule, (2) the State has adequate authority and resources to implement the program, (3) the schedule for implementation and compliance is sufficiently expeditious, and (4) the program is otherwise in compliance with Federal guidance. Once approval is granted, the air toxics program can be implemented and enforced by State or local agencies, as well as EPA.

On February 7, 1996, Indiana submitted to EPA a request for delegation of authority to implement and enforce the air toxics program under section 112 of the CAA exactly as promulgated by EPA. On July 8, 1997, **Federal Register** (62 FR 36460), EPA approved Indiana's program of delegation.

III. IDEM Submitted Which Standards to EPA for Approval Under Indiana's Air Toxics Program Delegation Mechanism?

On December 8, 1999, IDEM requested delegation of implementation and enforcement authority of the MACT standards for gasoline distribution, organic hazardous air pollutants, off-site waste recovery operations, and primary aluminum reduction (i.e., 40 CFR Part 63, Subparts R, F, G, H, I, DD, and LL, respectively). The State of Indiana's rules 326 Indiana Administrative Code (IAC) 20–10, 326 IAC 20–11, 326 IAC 20–12, 326 IAC 20–23, and 326 IAC 20–24 incorporate these MACT standards into the State's rules unchanged from the Federal regulations.

Dated: March 21, 2000.

Francis X. Lyons,

Regional Administrator, Region 5.

[FR Doc. 00–7998 Filed 3–30–00; 8:45 am]

BILLING CODE 6560–50–P

ENVIRONMENTAL PROTECTION AGENCY

[FRL–6569–4]

Air Pollution Control; Proposed Actions on Clean Air Act Grants to the Washoe County District Health Department

AGENCY: Environmental Protection Agency (EPA).

ACTION: Notice; proposed determination with request for comments and notice of opportunity for public hearing.

SUMMARY: The U.S. EPA has made a proposed determination that reductions in expenditures of non-Federal funds for the Washoe County District Health Department (WCDHD) in Reno, Nevada are a result of non-selective reductions in expenditures. This determination, when final, will permit the WCDHD to keep their financial assistance for FY 1999 by EPA, under section 105(c) of the Clean Air Act (CAA).

DATES: Comments and/or requests for a public hearing must be received by EPA at the address stated below by May 1, 2000.

ADDRESSES: All comments and/or requests for public hearing should be mailed to: Roy Ford, Grants and Program Integration Office (Air-8), Air

Division, U.S. EPA Region IX, 75 Hawthorne Street, San Francisco, California 94105–3901; FAX (415)744–1076.

FOR FURTHER INFORMATION CONTACT: Roy Ford, Grants and Program Integration Office (Air-8), Air Division, U.S. EPA Region IX, 75 Hawthorne Street, San Francisco, California 94105–3901 at (415) 744–1233.

SUPPLEMENTARY INFORMATION: Under the authority of section 105 of the CAA, EPA provides financial assistance (grants) to the WCDHD's to aid in the operation of its air pollution control programs. In FY–98, EPA awarded the WCDHD $839,758, which represented approximately 42% Of the WCDHD budget. In FY–99, EPA awarded $698,213, which represented approximately 36% of the WCDHD's budget.

Section 105(c)(1) of the CAA, 42 U.S.C. 7405(c)(1), provides that ''(n)o agency shall receive any grant under this section during any fiscal year when its expenditures of non-Federal funds for recurrent expenditures for air pollution control programs will be less than its expenditures were for such programs during the preceding fiscal year. In order for [EPA] to award grants under this section in a timely manner each fiscal year, [EPA] shall compare an agency's prospective expenditure level to that of its second preceding year.'' EPA may still award financial assistance to an agency not meeting this requirement, however, if EPA, ''after notice and opportunity for public hearing, determines that a reduction in expenditures is attributable to a non-selective reduction in the expenditures in the programs of all Executive branch agencies of the applicable unit of Government.'' CAA section 105(c)(1). These statutory requirements are repeated in EPA's implementing regulations at 40 CFR 35.210(a).

In its FY–99 section 105 Final FSR the WCDHD MOE was $1,161,276. This amount represents a shortfall of $48,016 from the actual FY–98 MOE of $1,209,292. In order for the WCDHD to be eligible to be awarded its FY–1999 grant, EPA must make a determination under section 105(c)(2) to keep the FY–1999 grant for WCDHD.

The reason for the lower MOE level in FY–99 is that the Washoe County District Board outlined a spending reduction plan totaling $316,384 for the Health District, $50,000 (0.4% decrease of the Health District budget) of which was allocated to be reduced by the Air Quality Management Division in the professional services line item account. The WCDHD submitted documentation to EPA which states that the district MOE reduction resulted from agency non-selective reduction in spending applied to Washoe County departments and required by action of the Washoe County Commissioners and adopted by the Washoe County District Board of health which governs the Air Quality management Division's programs.

Therefore, the WCDHD's MOE reduction resulted from a loss of revenues from the County to all agencies due to circumstances beyond its control. EPA proposes to determine that the WCDHD lower FY–99 MOE level meets the section 105(c)(2) criteria as resulting from a non-selective reduction of expenditures. Pursuant to 40 CFR 35.210, this determination will allow the WCDHD to keep the financial assistance for FY–1999.

This document constitutes a request for public comment and an opportunity for public hearing as required by the Clean Air Act. All written comments received by May 1, 2000 on this proposal will be considered. EPA will conduct a public hearing on this proposal only if a written request for such is received by EPA at the address above by May 1, 2000. If no written request for a hearing is received, EPA will proceed to the final determination. While notice of the final determination will not be published in the **Federal Register**, copies of the determination can be obtained by sending a written request to Roy Ford at the above address.

Dated: March 17, 2000.

David P. Howekamp,

Director, Air Division, Region 9.

[FR Doc. 00–7997 Filed 3–30–00; 8:45 am]

BILLING CODE 6560–50–P

ENVIRONMENTAL PROTECTION AGENCY

[ER–FRL–6252–6]

Environmental Impact Statements; Notice of Availability

Responsible Agency: Office of Federal Activities, General Information (202) 564–7167 or www.epa.gov/oeca/ofa.

Weekly receipt of Environmental Impact Statements

Filed March 20, 2000 Through March 24, 2000

Pursuant to 40 CFR 1506.9.

EIS No. 000080, Final EIS, AFS, UT, Pretty Tree Bench Vegetation Project, Implementation, Dixie National Forest, Escalante Ranger District, Garfield County, UT, Due: May 01, 2000, Contact: Kevin R. Schulkoski (435) 826–5400.

EIS No. 000081, Final EIS, IBR, CA, Groundwater Replenishment System, Implementation to Repurifying Water from Orange County Water District (OCWD) Orange County Sanitation District (OCSD), Funding and COE Section 404 Permit, Orange County, CA, Due: May 01, 2000, Contact: Mr. Del Kidd (702) 293–8698.

EIS No. 000082, Final EIS, TVA, TN, Addition of Electric Generation Peaking and Baseload Capacity at Greenfield Sites, Construction and Operation of Combustion Turbines (CTs), Haywood County, TN, Due: May 01, 2000, Contact: Gregory L. Askew (865) 632–6418.

EIS No. 000083, Final Supplement, FHW, KS, South Lawrence Trafficway Construction, Kansas Turnpike, I–70 to KS–10/Noria Road, New Information concerning KS–10 on the East and US 59 on the West, Funding, COE Section 404 Permit and Right-of-Way Acquisition, Douglas County, KS, Due: May 01, 2000, Contact: David R. Geiger (785) 267–7281.

EIS No. 000084, Draft Supplement, AFS, CO, Legislative—DSEIS—North Fork of the South Platte Rivers Wild and Scenic River Study for the Designation or Non-Designation into the National Wild and Scenic Rivers System, Pike and San Isabel National Forests, Comache and Cimarron National Grasslands, Douglas, Jefferson, Park and Teller Counties, CO, Due: June 29, 2000, Contact: Abigail R. Kimbell (719) 545–8737.

EIS No. 000085, Final EIS, FTA, VA, Norfolk-Virginia Beach Light Rail Transit System East/West Corridor Project, Transportation Improvements, Funding and COE Section 404 Permit, Tidewater Transportation District Commission, City of Norfolk and City of Virginia Beach, VA, Due: May 01, 2000, Contact: Michael McCollum (215) 656–7100.

EIS No. 000086, Final EIS, FTA, CA, Downtown Sacramento—Folsom Corridor, Improvement of Transit Services, US 50/Folsom Boulevard, Funding and COE Section 404 Permit, Transportation Systems Management (TSM) and Light Rail Transit (LRT), City and County of Sacramento, CA, Due: May 01, 2000, Contact: Bob Hom (415) 744–3133.

Dated: March 28, 2000.

Joseph C. Montgomery,

Director, NEPA Compliance Division, Office of Federal Activities.

[FR Doc. 00–8022 Filed 3–30–00; 8:45 am]

BILLING CODE 6560–50–U

ENVIRONMENTAL PROTECTION AGENCY

[ER–FRL–6252–7]

Environmental Impact Statements and Regulations; Availability of EPA Comments

Availability of EPA comments prepared March 13, 2000 Through March 17, 2000 pursuant to the Environmental Review Process (ERP), under Section 309 of the Clean Air Act and Section 102(2)(c) of the National Environmental Policy Act as amended. Requests for copies of EPA comments can be directed to the Office of Federal Activities at (202) 564–7167. An explanation of the ratings assigned to draft environmental impact statements (EISs) was published in FR dated April 9, 1999 (63 FR 17856).

Draft EISs

ERP No. D–AFS–L65340–AK

Rating EC2, Finger Mountain Timber Sales, Timber Harvesting, Implementation, US Coast Guard, NPDES and COE Section 10 and 404 Permits, Tongass National Forest, Sitka Ranger District, AK.

Summary: EPA expressed environmental concerns regarding the maintenance of existing and proposed roads, the cumulative impacts of log transfer facilities to the substrate, water quality, and the benthic environment. EPA also requested that the EIS include a discussion of essential fish habitat.

ERP No. D–AFS–L65343–ID

Rating EC2, Whiskey Campo Resource Management Project, Implementation, Elmore County, ID.

Summary: EPA expressed environmental concerns about potential sediment impacts, the lack of measures to mitigate sediment impacts and a restricted range of alternatives. EPA recommended the EIS use the framework outlined in the Forest Service Protocol for Addressing 303(d) Waters.

ERP No. D–NPS–J26002–MT

Rating EC2, Lake McDonald/Park Headquarters Wastewater Treatment System Rehabilitation, Implementation, COE Section 404 Permit, Glacier National Park, A Portion of Waterton-Glacier International Peach Park, Flathead and Glacier Counties, MT.

Summary: EPA expressed concerns about potential impacts to water quality. EPA requested additional information on treatment system capacity, treatment units, flow volumes, waste streams, chemical addition streams, and sludge disposal. EPA also provided effluent limitations that the discharge locations must meet.

ERP No. D–SFW–J64007–00

Rating EC2, Plum Creek Native Fish Habitat Conservation Plan, Issuance of an Incidential Take Permit for Federally Protected Native Fish Species, MT, ID and WA.

Summary: EPA expressed environmental concerns regarding the adequacy of the proposed monitoring and adaptive management program, particularly cumulative effects, and about the adequacy of proposed riparian management prescriptions. EPA believes additional information should be provided regarding integration of the program with overall conservation efforts, availability of resources for oversight and evaluation of the program, and consistency between the program and TMDLs.

Final EISs

ERP No. F–AFS–J65279–MT Wayup Mine/Fourth of July Road Access, Right-of-Way Grant, Kootenai National Forest, Libby Ranger District, Lincoln County, MT.

Summary: EPA continues to be concerned about potential water quality impacts from sedimentation.

ERP No. F–AFS–J65290–UT Snowbird Ski and Summer Resort Master Development Plan, Implementation, Special-Use-Permit and COE Section 404 Permit, Salt Lake and Lake Counties, Salt Lake City, UT.

Summary: No formal comment letter was sent to the preparing agency.

ERP No. F–AFS–L65316–ID Coeur d'Alene River Ranger District Noxious Weed Control Project, Treating 76 Specific Sites across District, Kootenai and Shoshone Counties, ID.

Summary: No formal comment letter was sent to the preparing agency.

ERP No. FS–NAS–A12031–00 Programmatic EIS—Sounding Rocket Program (SRP), Updated Information concerning Programmatic Changes since the 1973 FEIS, Site-Specific to Wallops Flight Facility (WFF), Wallops Island, VA; Poker Flat Research Ranger (PFRR), Fairbanks, AK and White Sands Missile Range (WSMR), White Sands, NM and on a Global Scale.

Summary: EPA has no objection to the action as proposed.

Dated: March 28, 2000.

Joseph C. Montgomery,

Director, NEPA Compliance Division, Office of Federal Activities.

[FR Doc. 00–8023 Filed 3–30–00; 8:45 am]

BILLING CODE 6560–50–M

ENVIRONMENTAL PROTECTION AGENCY

[OPP–00570A; FRL–6493–7]

Pesticides; Policy Issues Related to the Food Quality Protection Act

AGENCY: Environmental Protection Agency (EPA).

ACTION: Notice of availability.

SUMMARY: EPA is announcing the availability of the revised version of the pesticide science policy document entitled ''Assigning Values to Non-Detected/Non-Quantified Pesticide Residues.'' This notice is the sixteenth in a series concerning science policy documents related to the Food Quality Protection Act of 1996 and developed through the Tolerance Reassessment Advisory Committee.

FOR FURTHER INFORMATION CONTACT: Kathleen Martin, Environmental Protection Agency (7509C), Ariel Rios Bldg., 1200 Pennsylvania, Ave., NW., Washington, DC 20460; telephone number: (703) 308–2857; fax number: (703) 305–5147; e-mail address: martin.kathleen@epa.gov.

SUPPLEMENTARY INFORMATION:

I. General Information

A. Does this Action Apply to Me?

You may be potentially affected by this action if you manufacture or formulate pesticides. Potentially affected categories and entities may include, but are not limited to:

Categories	NAICS	Examples of potentially affected entities
Pesticide Producers	32532	Pesticide manufacturers Pesticide formulators

This listing is not intended to be exhaustive, but rather provides a guide for readers regarding entities likely to be affected by this action. Other types of entities not listed could also be affected. The North American Industrial Classification System (NAICS) codes have been provided to assist you and others in determining whether or not this notice affects certain entities. If you have any questions regarding the applicability of this action to a particular entity, consult the person listed under ''FOR FURTHER INFORMATION CONTACT.''

B. How Can I Get Additional Information, Including Copies of this Document or Other Related Documents?

1. *Electronically*. You may obtain electronic copies of this document, the science policy documents, and certain other related documents that might be available from the Office of Pesticide Programs' Home Page at http://www.epa.gov/pesticides/. On the Office of Pesticide Programs' Home Page select ''FQPA'' and then look up the entry for this document under ''Science Policies.'' You can also go directly to the listings at the EPA Home page at http://www.epa.gov. On the Home Page select ''Laws and Regulations'' and then look up the entry to this document under ''**Federal Register**--Environmental Documents.'' You can go directly to the **Federal Register** listings at http://www.epa.gov/fedrgstr/.

2. *Fax on demand*. You may request a faxed copy of the science policy papers, as well as supporting information, by using a faxphone to call (202) 401–0527. Select item 6047 for the paper entitled ''Assigning Values to Non-Detected/Non-Quantified Pesticide Residues.'' Select item 6048 for the paper entitled ''Responses to Public Comments on the Office of Pesticide Program's Draft Science Policy Documents.'' You may also follow the automated menu.

3. *In person*. The Agency has established an official record for this action under docket control number OPP–00570A. In addition, the documents referenced in the framework notice, which published in the **Federal Register** on October 29, 1998 (63 FR 58038) (FRL–6041–5) have also been inserted in the docket under docket control number OPP–00557. The official record consists of the documents specifically referenced in this action, and other information related to this action, including any information claimed as Confidential Business Information (CBI). This official record includes the documents that are physically located in the docket, as well as the documents that are referenced in those documents. The public version of the official record does not include any information claimed as CBI. The public version of the official record, which includes printed, paper versions of any electronic comments submitted during an applicable comment period is available for inspection in the Public Information and Records Integrity Branch (PIRIB), Rm. 119, Crystal Mall #2, 1921 Jefferson Davis Highway, Arlington, VA, from 8:30 a.m. to 4 p.m., Monday through Friday, excluding legal holidays. The PIRIB telephone number is (703) 305–5805.

II. Background for the Tolerance Reassessment Advisory Committee

On August 3, 1996, the Food Quality Protection Act of 1996 (FQPA) was signed into law. Effective upon signature, the FQPA significantly amended the Federal Insecticide, Fungicide, and Rodenticide Act (FIFRA) and the Federal Food, Drug, and Cosmetic Act (FFDCA). Among other changes, FQPA established a stringent health-based standard (''a reasonable certainty of no harm'') for pesticide residues in foods to assure protection from unacceptable pesticide exposure; provided heightened health protections for infants and children from pesticide risks; required expedited review of new, safer pesticides; created incentives for the development and maintenance of effective crop protection tools for farmers; required reassessment of existing tolerances over a 10-year period; and required periodic re-evaluation of pesticide registrations and tolerances to ensure that scientific data supporting pesticide registrations will remain up-to-date in the future.

Subsequently, the Agency established the Food Safety Advisory Committee (FSAC) as a subcommittee of the National Advisory Council for Environmental Policy and Technology (NACEPT) to assist in soliciting input from stakeholders and to provide input to EPA on some of the broad policy choices facing the Agency and on strategic direction for the Office of Pesticide Programs (OPP). The Agency has used the interim approaches developed through discussions with FSAC to make regulatory decisions that met FQPA's standard, but that could be revisited if additional information became available or as the science evolved. As EPA's approach to implementing the scientific provisions of FQPA has evolved, the Agency has sought independent review and public participation, often through presentation of many of the science policy issues to the FIFRA Scientific Advisory Panel (SAP), a group of independent, outside experts who provide peer review and scientific advice to OPP.

In addition, as directed by Vice President Albert Gore, EPA has been working with the U.S. Department of Agriculture (USDA) and another subcommittee of NACEPT, the Tolerance Reassessment Advisory Committee (TRAC), chaired by the EPA Deputy Administrator and the USDA Deputy Secretary, to address FQPA issues and implementation. TRAC comprised more than 50 representatives of affected user, producer, consumer, public health, environmental, states and other interested groups. The TRAC met seven times as a full committee from May 27, 1998 through October 21, 1999.

The Agency worked with the TRAC to ensure that its science policies, risk assessments of individual pesticides, and process for decision making are transparent and open to public participation. An important product of these consultations with TRAC was the development of a framework for addressing key science policy issues. The Agency decided that the FQPA implementation process and related policies would benefit from initiating notice and comment on the major science policy issues.

The TRAC identified nine science policy issue areas it believes were key to implementation of FQPA and tolerance reassessment. The framework calls for EPA to provide one or more documents for comment on each of the nine issues by announcing their availability in the **Federal Register**. In accordance with the framework described in a separate notice published in the **Federal Register** of October 29, 1998 (63 FR 58038), EPA is announcing through the **Federal Register** the availability of a series of draft documents concerning nine science policy issues identified by the TRAC related to the implementation of FQPA. After receiving and reviewing comments from the public and others, EPA is also issuing revised science policy documents which reflect changes made in response to comments. In addition to comments received in response to these **Federal Register** notices, EPA will consider comments received during the TRAC meetings. Each of these issues is evolving and in a different stage of refinement. Accordingly, as the issues are further refined by EPA in consultation with USDA and others, they may also be presented to the SAP.

III. Summary of Revised Science Policy Guidance Document

Residue data are used by the EPA's Office of Pesticide Programs to support the establishment or reassessment of a pesticide tolerance associated with a particular food use. In some cases, a portion of the measurements of the levels of pesticide residue present on food shows no detection of residues. These ''nondetects'' (NDs) do not necessarily mean that the pesticide is not present at any level, but simply that any amount of pesticide present is below the level that could be detected or reliably quantified using a particular analytical method.

The primary science policy issue concerning NDs is what value the EPA should assign to them when estimating dietary exposure and risk from a pesticide. The reason this is an important issue stems from the new requirements that the FQPA impose on EPA. Among other things, FQPA established a stringent health-based standard (''a reasonable certainty of no harm'') for pesticide residues in foods to assure protection of the public health, including sensitive populations such as infants and children, from unacceptable pesticide exposure and risks. OPP's goal is to make exposure and risk assessments as accurate and realistic as possible while not underestimating exposure or risk, so that all humans, including infants and children, are fully protected. The specific issues addressed in this paper concern the values the Agency should assign to NDs in order to meet this goal.

In general, the OPP recommends use of a default value of ½ the Limit of Detection (LOD) or ½ the Limit of Quantitation (LOQ) for commodities which have been treated but for which no detectable residues are measured. This paper also describes the OPP's policy of performing a ''sensitivity analysis'' to determine the impact of using different assumptions (e.g., assuming NDs = full LOD or full LOQ versus NDs = zero), on the OPP's risk assessment for the pesticide under evaluation. If it is demonstrated through the sensitivity analysis that the default assumptions have no effect on the final OPP risk decision, then there is little reason for OPP to attempt to further refine these default assignments.

If OPP finds that these default assignments do have a significant effect on the risk estimate or risk decision or decides that a more refined risk estimate is needed, a second set of statistical methods can be used instead to determine the values or distribution of values for NDs. These statistical methods provide a more accurate way of estimating dietary exposure and risk than assuming that, for NDs, exposure occurs at ½ LOD or some other single, finite value and allowing risk assessors to impute a series of values which represent concentrations below the stated detection limit. These methods would generally be used only in situations where the NDs comprise a significant (but less than half) portion of the data set and the rest of the data are normally or lognormally distributed, but exceptions can be considered on a case-by-case basis.

This revised document was developed from two previous draft documents entitled ''Assigning Values To Nondetected/Nonquantified Pesticide Residues into Human Health Dietary Exposure Assessments''(docket control number OPP–00570) and ''A Statistical Method for Incorporating Nondetected Pesticide Residues into Human Health Dietary Exposure Assessments'' (docket control number OPP–00571) that were released for public comment December 4, 1998 (63 FR 67063) (FRL–6048–2). The Agency received comments from various organizations. Each of the commenters offered recommendations for improving the science policy. All comments were extensively evaluated and considered by the Agency. This revised version embodies many of the sentiments and recommendations of the commenters. A summary of the public comments, as well as the Agency's response to the comments, are being made available as described in Units I.B.1. and I.B.2.

IV. Policies Not Rules

The policy document discussed in this notice is intended to provide guidance to EPA personnel and decision-makers, and to the public. As a guidance document and not a rule, the policy in this guidance is not binding on either EPA or any outside parties. Although this guidance provides a starting point for EPA risk assessments, EPA will depart from its policy where the facts or circumstances warrant. In such cases, EPA will explain why a different course was taken. Similarly, outside parties remain free to assert that a policy is not appropriate for a specific pesticide or that the circumstances surrounding a specific risk assessment demonstrate that a policy should be abandoned.

List of Subjects

Environmental protection, Administrative practice and procedure, Agricultural commodities, Pesticides and pests.

Dated: March 23, 2000.

Susan H. Wayland,

Acting Assistant Administrator for Prevention, Pesticides and Toxic Substances.

[FR Doc. 00–7889 Filed 3–30–00; 8:45 am]

BILLING CODE 6560–50–F

FEDERAL COMMUNICATIONS COMMISSION

[Report No. AUC–00–34–A (Auction No. 34); DA 00–667]

Auction of Licenses for 800 MHz Specialized Mobile Radio (SMR) Service General Category Frequencies in the 851–854 MHz Band Scheduled for August 23, 2000; Comment Sought on Reserve Prices or Minimum Opening Bids and Other Auction Procedural Issues

AGENCY: Federal Communications Commission.

ACTION: Notice.

SUMMARY: This document announces the auction of licenses for the 800 MHz SMR Service General Category Frequencies in the 851–854 MHz Band (Auction No. 34) scheduled to commence on August 23, 2000 and seeks comment on the reserve prices or minimum opening bids and other auction procedural issues for the upcoming auction of licenses.

DATES: Comments are due on or before April 5, 2000 and reply comments are due on or before April 12, 2000.

ADDRESSES: Office of the Secretary, Federal Communications Commission, Federal Communications Commission, 445 12th Street, SW, TW–A325, Washington, D.C. 20554. In addition, parties must submit one copy to M. Nicole Oden, Attorney, Auctions and Industry Analysis Division, Wireless Telecommunications Bureau, Federal Communications Commission, Room 4–A337, 445 12th Street SW, Washington, D.C. 20554. Comments and reply comments will be available for public inspection during regular business hours in the FCC Public Reference Room, Room CY–A257, 445 12th Street SW, Washington, D.C. 20554.

FOR FURTHER INFORMATION CONTACT: M. Nicole Oden, Auctions Attorney, Auctions and Industry Analysis Division, at (202) 418–0660, Nancy Gilbert or Bob Reagle, Auction Operations, Auctions and Industry Analysis Division, at (717) 338–2888.

SUPPLEMENTARY INFORMATION: This is a summary of a Public Notice released March 23, 2000. The complete text of the public notice, including Attachment A, is available for inspection and copying during normal business hours in the FCC Reference Center (Room CY–A257), 445 12th Street, SW, Washington, DC 20554. It may also be purchased from the Commission's copy contractor, International Transcription Services, Inc. (ITS, Inc.) 1231 20th Street, NW, Washington, DC 20036,

(202) 857–3800. It is also available on the Commission's web site at *http://www.fcc.gov.*

1. By this Public Notice, the Wireless Telecommunications Bureau (''Bureau'') announces the auction of licenses for the 800 MHz SMR Service General Category Frequencies (''Auction No. 34'') scheduled to begin on August 23, 2000. *See* Amendment of part 90 of the Commission's Rules to Facilitate Future Development of SMR Systems in the 800 MHz Frequency (*First Report and Order*) 61 FR 6212 (February 16, 1996), (*Second Report and Order*) 62 FR 41190 (July 31, 1997) and (Reconsideration Order) 64 FR 71042 (December 20, 1999). As discussed in greater detail herein, the Bureau proposes that Auction No. 34 be composed of 1,050 licenses in the 851–854 MHz band. Six contiguous 25 channel blocks (1.25 MHz bandwidth) will be offered in each of 172 Economic Areas (EAs) and 3 EA-like areas, covering the United States, possessions or territories in the Northern Mariana Islands and Guam, American Samoa, the United States Virgin Islands and Puerto Rico.

2. The following table contains the proposed Block/Frequency Band Limits Cross-Reference List for the 800 MHz SMR Service General Category Frequencies:

800 MHz SMR Service General Category Frequencies—(851–854 MHz Band)

Channel block	Channel No.	Base station frequencies (channel centers)
D	1 through 25	851.0125 through 851.6125.
DD	26 through 50	851.6375 through 852.2375.
E	51 through 75	852.2625 through 852.8625.
EE	76 through 100	852.8875 through 853.4875.
F	101 through 125	853.5125 through 854.1125.
FF	126 through 150	854.1375 through 854.7375.

The Balanced Budget Act of 1997, Public Law 105–33, 111 Stat. 251 (Budget Act) requires the Commission to ''ensure that, in the scheduling of any competitive bidding under this subsection, an adequate period is allowed * * * before issuance of bidding rules, to permit notice and comment on proposed auction procedures * * *.'' Consistent with the provisions of the Budget Act and to ensure that potential bidders have adequate time to familiarize themselves with the specific provisions that will govern the day-to-day conduct of an auction, the Commission directed the Bureau, under its existing delegated authority, to seek comment on a variety of auction-specific procedures prior to the start of each auction. *See* Amendment of Part 1 of the Commission's Rules—Competitive Bidding Proceeding (*Part 1 Order*) 62 FR 13540 (March 21, 1997), Amendment of Part 1 of the Commission's Rules—Competitive Bidding Procedures (*Part 1 Third Report and Order*) 63 FR 770 (January 7, 1998). We therefore seek comment on the following issues relating to Auction No. 34.

I. Auction Structure

A. Simultaneous Multiple Round Auction Design

3. We propose to award the licenses in a single, simultaneous multiple-round auction to allow bidders to take advantage of any synergies that exist among licenses. This methodology offers every license for bid at the same time in successive bidding rounds. We seek comment on this proposal.

B. Upfront Payments and Initial Maximum Eligibility for Each Bidder

4. The Bureau has delegated authority and discretion to determine an appropriate upfront payment for each license being auctioned, taking into account such factors as the population in each geographic license area, and the value of similar spectrum. The upfront payment is a refundable deposit made by each bidder to establish eligibility to bid on licenses. Upfront payments related to the specific spectrum subject to auction protect against frivolous or insincere bidding and provide the Commission with a source of funds from which to collect payments owed at the end of the auction. *See* Implementation of section 309(j) of the Communications Act-Competitive Bidding (*Second Report and Order*) 59 FR 22980 (May 4, 1994). With these guidelines in mind, we propose for Auction No. 34 the following upfront payment formula.

License population * $0.005 (the result rounded to the nearest hundred for levels below $10,000 and to the nearest thousand for levels above $10,000) with a minimum of no less than $2500.00 per license.

All licenses, including the related license area population and upfront payment, are listed in Attachment A. We seek comment on this proposal. We further propose that the amount of the upfront payment submitted by a bidder will determine the initial maximum eligibility (as measured in bidding units) for each bidder. Upfront payments will not be attributed to specific licenses, but instead will be translated into bidding units to define a bidder's initial maximum eligibility, which cannot be increased during the auction. Thus, in calculating the upfront payment amount, an applicant must determine the *maximum* number of bidding units it may wish to bid on (or hold high bids on) in any single round, and submit an upfront payment covering that number of bidding units. We seek comment on this proposal.

C. Activity Rules

5. In order to ensure that the auction closes within a reasonable period of time, an activity rule requires bidders to bid actively on a percentage of their maximum bidding eligibility during each round of the auction rather than waiting until the end to participate. A bidder that does not satisfy the activity rule will either lose bidding eligibility in the next round or must use an activity rule waiver (if any remain).

6. We propose to divide the auction into three stages: Stage One, Stage Two and Stage Three, each characterized by an increased activity requirement. The auction will start in Stage One. We propose that the auction will generally advance to the next stage (*i.e.,* from Stage One to Stage Two, and from Stage Two to Stage Three) when the auction activity level, as measured by the percentage of bidding units receiving new high bids, is approximately ten percent or below for three consecutive rounds of bidding in Stages One and Two. However, we further propose that the Bureau retain the discretion to change stages unilaterally by announcement during the auction. In exercising this discretion, the Bureau will consider a variety of measures of bidder activity including, but not limited to, the auction activity level, the

percentages of licenses (as measured in bidding units) on which there are new bids, the number of new bids, and the percentage increase in revenue. We seek comment on these proposals.

7. For Auction No. 34, we propose the following activity requirements:

Stage One: In each round of the first stage of the auction, a bidder desiring to maintain its current eligibility is required to be active on licenses representing at least 80 percent of its current bidding eligibility. Failure to maintain the requisite activity level will result in a reduction in the bidder's bidding eligibility in the next round of bidding (unless an activity rule waiver is used). During Stage One, reduced eligibility for the next round will be calculated by multiplying the current round activity by five-fourths (5/4).

Stage Two: In each round of the second stage, a bidder desiring to maintain its current eligibility is required to be active on 90 percent of its current bidding eligibility. During Stage Two, reduced eligibility for the next round will be calculated by multiplying the current round activity by ten-ninths (10/9).

Stage Three: In each round of the third stage, a bidder desiring to maintain its current eligibility is required to be active on 98 percent of its current bidding eligibility. In this final stage, reduced eligibility for the next round will be calculated by multiplying the current round activity by fifty/forty-ninths (50/49).

We seek comment on these proposals.

D. Activity Rule Waivers and Reducing Eligibility

8. Use of an activity rule waiver preserves the bidder's current bidding eligibility despite the bidder's activity in the current round being below the required minimum level. An activity rule waiver applies to an entire round of bidding and not to a particular license. Activity waivers are principally a mechanism for auction participants to avoid elimination from the auction.

9. The FCC auction system assumes that bidders with insufficient activity would prefer to use an activity rule waiver (if available) rather than lose bidding eligibility. Therefore, the system will automatically apply a waiver (known as an ''automatic waiver'') at the end of any bidding period where a bidder's activity level is below the minimum required unless:

(i) There are no activity rule waivers available; or

(ii) The bidder overrides the automatic application of a waiver by reducing eligibility, thereby meeting the minimum requirements.

10. A bidder with insufficient activity that wants to reduce its bidding eligibility, rather than use an activity rule waiver, must affirmatively override the automatic waiver mechanism during the bidding period by using the reduce eligibility function in the software. In this case, the bidder's eligibility is permanently reduced to bring the bidder into compliance with the activity rules. Once eligibility has been reduced, a bidder will not be permitted to regain its lost bidding eligibility.

11. A bidder may proactively apply an activity rule waiver as a means to keep the auction open without placing a bid. If a bidder submits a proactive waiver (using the proactive waiver function in the bidding software) during a bidding period in which no bids are submitted, the auction will remain open and the bidder's eligibility will be preserved. Note: an automatic waiver invoked in a round in which there are no new valid bids will not keep the auction open.

12. We propose that each bidder in Auction No. 34, be provided with five activity rule waivers that may be used in up to five separate rounds at the bidder's discretion during the course of the auction. We seek comment on this proposal.

E. Information Relating to Auction Delay, Suspension or Cancellation

13. For Auction No. 34, we propose that, by public notice or by announcement during the auction, the Bureau may delay, suspend or cancel the auction in the event of natural disaster, technical obstacle, evidence of an auction security breach, unlawful bidding activity, administrative or weather necessity, or for any other reason that affects the fair and competitive conduct of competitive bidding. In such cases, the Bureau, in its sole discretion, may elect to: Resume the auction starting from the beginning of the current round; resume the auction starting from some previous round; or cancel the auction in its entirety. Network interruption may cause the Bureau to delay or suspend the auction. We emphasize that exercise of this authority is solely within the discretion of the Bureau, and its use is not intended to be a substitute for situations in which bidders may wish to apply their activity rule waivers. We seek comment on this proposal.

II. Bidding Procedures

A. Round Structure

14. The Commission will use its Automated Auction System to conduct the electronic simultaneous multiple round auction format for Auction No. 34. The initial bidding schedule will be announced in a public notice to be released at least one week before the start of the auction, and will be included in the registration mailings. The simultaneous multiple round format will consist of sequential bidding rounds, each followed by the release of round results. Details regarding the location and format of round results will be included in the same public notice.

15. The Bureau has discretion to change the bidding schedule in order to foster an auction pace that reasonably balances speed with the bidders' need to study round results and adjust their bidding strategies. The Bureau may increase or decrease the amount of time for the bidding rounds and review periods, or the number of rounds per day, depending upon the bidding activity level and other factors. We seek comment on this proposal.

B. Reserve Price or Minimum Opening Bid

16. The Budget Act calls upon the Commission to prescribe methods by which a reasonable reserve price will be required or a minimum opening bid established when FCC licenses are subject to auction (*i.e.*, because the Commission has accepted mutually exclusive applications for those licenses), unless the Commission determines that a reserve price or minimum bid is not in the public interest. Consistent with this mandate, the Commission has directed the Bureau to seek comment on the use of a minimum opening bid and/or reserve price prior to the start of each auction

17. Normally, a reserve price is an absolute minimum price below, which an item will not be sold in a given auction. Reserve prices can be either published or unpublished. A minimum opening bid, on the other hand, is the minimum bid price set at the beginning of the auction below which *no bids* are accepted. It is generally used to accelerate the competitive bidding process. Also, in a minimum opening bid scenario, the auctioneer generally has the discretion to lower the amount later in the auction. It is also possible for the minimum opening bid and the reserve price to be the same amount.

18. In anticipation of this auction and in light of the Budget Act, the Bureau proposes to establish minimum opening bids for Auction No. 34. The Bureau believes a minimum opening bid, which has been utilized in other auctions, is an effective bidding tool. *See* Auction of 800 MHz SMR, Minimum Opening Bids or Reserve Prices (DA 97–2147) 62 FR 55251 (October 23, 1997), Auction of the Phase II 220 MHz Service Licenses (DA

98–1010) 63 FR 35213 (June 29, 1998). A minimum opening bid, rather than a reserve price, will help to regulate the pace of the auction and provides flexibility.

19. Specifically, for Auction No. 34, the Commission proposes the following formula for calculating minimum opening bids for each license, based on the population (''pops'') of the relevant EA:

License population * $0.005 (the result rounded to the nearest hundred for results less than $10,000 and to the nearest thousand for results greater than $10,000) with a minimum of no less than $2500.00 per license.

We seek comment on this proposal. All licenses including the related license area population and the proposed minimum opening bid, are listed in Attachment A. If commenters believe the formula proposed above for minimum opening bids will result in substantial numbers of unsold licenses, or is not a reasonable amount, or should instead operate as a reserve price, they should explain why this is so, and comment on the desirability of an alternative approach. Commenters are advised to support their claims with valuation analyses and suggested reserve prices or minimum opening bid levels or formulas. In establishing the formula for minimum opening bids, we particularly seek comment on such factors as, among other things, the amount of spectrum being auctioned, levels of incumbency, the availability of technology to provide service, the size of the geographic service areas, issues of interference with other spectrum bands and any other relevant factors that could reasonably have an impact on valuation of the 800 MHz band. Alternatively, comment is sought on whether, consistent with the Budget Act, the public interest would be served by having no minimum opening bid or reserve price.

C. Minimum Accepted Bids and Bid Increments

20. Once there is a standing high bid on a license, a bid increment will be applied to that license to establish a minimum acceptable bid for the following round. For Auction No. 34, we propose to use a smoothing methodology to calculate bid increments, as we have done in several other auctions. The Bureau retains the discretion to change the minimum bid increment if it determines that circumstances so dictate. The Bureau will do so by announcement in the Automated Auction System. We seek comment on these proposals.

21. The exponential smoothing formula calculates the bid increment for each license based on a weighted average of the activity received on each license in all previous rounds. This methodology will tailor the bid increment for each license based on activity, rather than setting a global increment for all licenses. For every license that receives a bid, the bid increment for the next round for that license will be established using the exponential smoothing formula.

22. The calculation of the percentage bid increment for each license in a given round is made at the end of the previous round. The computation is based on an activity index, which is calculated as the weighted average of the activity in that round and the activity index from the prior round. The activity index at the start of the auction (round 0) will be set at 0. The current activity index is equal to a weighting factor times the number of new bids received on the license in the most recent bidding round plus one minus the weighting factor times the activity index from the prior round. The activity index is then used to calculate a percentage increment by multiplying a minimum percentage increment by one plus the activity index with that result being subject to a maximum percentage increment. The Commission will initially set the weighting factor at 0.5, the minimum percentage increment at 0.1, and the maximum percentage increment at 0.2.

Equations

$A_i = (C * B_i) + ((1-C) * A_{i-1})$

I_{i+1} = smaller of $((1 + A_i) * N)$ and M

Where,

A_i = activity index for the current round (round i)

C = activity weight factor

B_i = number of bids in the current round (round i)

A_{i-1} = activity index from previous round (round i-1), A_0 is 0

I_{i+1} = percentage bid increment for the next round (round i+1)

N = minimum percentage increment or bid increment floor

M = maximum percentage increment or bid increment ceiling

Under the exponential smoothing methodology, once a bid has been received on a license, the minimum acceptable bid for that license in the following round will be the new high bid plus the dollar amount associated with the percentage increment (variable I_{i+1} from above times the high bid). This result will be rounded to the nearest thousand if it is over ten thousand or to the nearest hundred if it is under ten thousand.

Examples

License 1

C = 0.5, N = 0.1, M = 0.2

Round 1 (2 New Bids, High Bid = $1,000,000)

i. Calculation of percentage increment for round 2 using exponential smoothing:
   $A_1 = (0.5 * 2) + (0.5 * 0) = 1$
   I_2 = The smaller of (1 + 1) * 0.1 = 0.2 or 0.2 (the maximum percentage increment)
ii. Minimum bid increment for round 2 using the percentage increment (I_2 from above)
   0.2 * $1,000,000 = $200,000
iii. Minimum acceptable bid for round 2 = 1,200,000

Round 2 (3 New Bids, High Bid = 2,000,000)

i. Calculation of percentage increment for round 3 using exponential smoothing:
   $A_2 = (0.5 * 3) + (0.5 * 1) = 2$
   I_3 = The smaller of (1 + 2) * 0.1 = 0.3 or 0.2 (the maximum percentage increment)
ii. Minimum bid increment for round 3 using the percentage increment (I_3 from above)
   0.2 * $2,000,000 = $400,000
iii. Minimum acceptable bid for round 3 = 2,400,000

Round 3 (1 New Bid, High Bid = 2,400,000)

i. Calculation of percentage increment for round 4 using exponential smoothing:
   $A_3 = (0.5 * 1) + (0.5 * 2) = 1.5$
   I_4 = The smaller of (1 + 1.5) * 0.1 = 0.25 or 0.2 (the maximum percentage increment)
ii. Minimum bid increment for round 4 using the percentage increment (I_4 from above)
   0.2 * $2,400,000 = $480,000
iii. Minimum acceptable bid for round 4 = 2,880,000

D. Information Regarding Bid Withdrawal and Bid Removal

23. For Auction No. 34, we propose the following bid removal and bid withdrawal procedures. Before the close of a bidding period, a bidder has the option of removing any bids placed in that round. By using the remove bid function in the software, a bidder may effectively ''unsubmit'' any bid placed within that round. A bidder removing a bid placed in the same round is not subject to withdrawal payments.

24. Once a round closes, a bidder may no longer remove a bid. However, in the next round, a bidder may withdraw

standing high bids from previous rounds using the withdraw bid function. A high bidder that withdraws its standing high bid from a previous round is subject to the bid withdrawal payment provisions. We seek comment on these bid removal and bid withdrawal procedures.

25. In the *Part 1 Third Report and Order,* the Commission explained that allowing bid withdrawals facilitates efficient aggregation of licenses and the pursuit of efficient backup strategies as information becomes available during the course of an auction. The Commission noted, however, that, in some instances, bidders may seek to withdraw bids for improper reasons. The Bureau, therefore, has discretion, in managing the auction, to limit the number of withdrawals to prevent any bidding abuses. The Commission stated that the Bureau should assertively exercise its discretion, consider limiting the number of rounds in which bidders may withdraw bids, and prevent bidders from bidding on a particular market if the Bureau finds that a bidder is abusing the Commission's bid withdrawal procedures.

26. Applying this reasoning, we propose to limit each bidder in Auction No. 34, to withdraw standing high bids in no more than two rounds during the course of the auction. To permit a bidder to withdraw bids in more than two rounds would likely encourage insincere bidding or the use of withdrawals for anti-competitive purposes. The two rounds in which withdrawals are utilized will be at the bidder's discretion; withdrawals otherwise must be in accordance with the Commission's rules. There is no limit on the number of standing high bids that may be withdrawn in either of the rounds in which withdrawals are utilized. Withdrawals will remain subject to the bid withdrawal payment provisions specified in the Commission's rules. We seek comment on this proposal.

E. Stopping Rule

27. For Auction No. 34, the Bureau proposes to employ a simultaneous stopping rule approach. The Bureau has discretion ''to establish stopping rules before or during multiple round auctions in order to terminate the auction within a reasonable time''. A simultaneous stopping rule means that all licenses remain open until the first round in which no new acceptable bids, proactive waivers or withdrawals are received. After the first such round, bidding closes simultaneously on all licenses. Thus, unless circumstances dictate otherwise, bidding would remain open on all licenses until bidding stops on every license.

28. The Bureau seeks comment on a modified version of the simultaneous stopping rule. The modified stopping rule would close the auction for all licenses after the first round in which no bidder submits a proactive waiver, a withdrawal, or a new bid on any license on which it is not the standing high bidder. Thus, absent any other bidding activity, a bidder placing a new bid on a license for which it is the standing high bidder would not keep the auction open under this modified stopping rule. The Bureau further seeks comment on whether this modified stopping rule should be used unilaterally or only in Stage Three of the auction.

29. We propose that the Bureau retain the discretion to keep an auction open even if no new acceptable bids or proactive waivers are submitted and no previous high bids are withdrawn. In this event, the effect will be the same as if a bidder had submitted a proactive waiver. The activity rule, therefore, will apply as usual and a bidder with insufficient activity will either lose bidding eligibility or use a remaining activity rule waiver.

30. Finally, we propose that the Bureau reserve the right to declare that the auction will end after a specified number of additional rounds (''special stopping rule''). If the Bureau invokes this special stopping rule, it will accept bids in the final round(s) only for licenses on which the high bid increased in at least one of the preceding specified number of rounds. The Bureau proposes to exercise this option only in certain circumstances, such as, for example, where the auction is proceeding very slowly, there is minimal overall bidding activity, or it appears likely that the auction will not close within a reasonable period of time. Before exercising this option, the Bureau is likely to attempt to increase the pace of the auction by, for example, moving the auction into the next stage (where bidders would be required to maintain a higher level of bidding activity), increasing the number of bidding rounds per day, and/or increasing the amount of the minimum bid increments for the limited number of licenses where there is still a high level of bidding activity. We seek comment on these proposals.

Federal Communications Commission.

Louis J. Sigalos,

Deputy Chief, Auctions & Industry Analysis Division.

[FR Doc. 00–7968 Filed 3–30–00; 8:45 am]

BILLING CODE 6712–01–U

FEDERAL COMMUNICATIONS COMMISSION

[Report No. AUC–00–36–A (Auction No. 36); DA 00–668]

Auction of Licenses for 800 MHz Specialized Mobile Radio (SMR) Frequencies in the Lower 80 Channels Scheduled for September 13, 2000; Comment Sought on Reserve Prices or Minimum Opening Bids and Other Auction Procedural Issues

AGENCY: Federal Communications Commission.

ACTION: Notice.

SUMMARY: This document announces the auction of licenses for the 800 MHz SMR frequencies in the lower 80 channels, the 856–860 MHz Band, (Auction No. 36) scheduled to commence on September 13, 2000 and seeks comment on the reserve prices or minimum opening bids and other auction procedural issues for the upcoming auction of licenses.

DATES: Comments are due on or before April 5, 2000 and reply comments are due on or before April 12, 2000.

ADDRESSES: Office of the Secretary, Federal Communications Commission, Federal Communications Commission, 445 12th Street, SW, TW–A325, Washington, D.C. 20554. In addition, parties must submit one copy to M. Nicole Oden, Attorney, Auctions and Industry Analysis Division, Wireless Telecommunications Bureau, Federal Communications Commission, Room 4–A337, 445 12th Street SW, Washington, D.C. 20554. Comments and reply comments will be available for public inspection during regular business hours in the FCC Public Reference Room, Room CY-A257, 445 12th Street SW, Washington, D.C. 20554.

SUPPLEMENTARY INFORMATION: This is a summary of a Public Notice released March 23, 2000. The complete text of the public notice, including Attachment A, is available for inspection and copying during normal business hours in the FCC Reference Center (Room CY–A257), 445 12th Street, SW, Washington, D.C. 20554. It may also be purchased from the Commission's copy contractor, International Transcription Services, Inc. (ITS, Inc.) 1231 20th Street, NW, Washington, D.C. 20036, (202) 857–3800. It is also available on the Commission's web site at *http://www.fcc.gov*.

1. By this Public Notice, the Wireless Telecommunications Bureau (''Bureau'') announces the auction of licenses for the 800 MHz SMR lower 80 channels (''Auction No. 36'') scheduled to begin

on September 13, 2000. *See* Amendment of Part 90 of the Commission's Rules to Facilitate Future Development of SMR Systems in the 800 MHz Frequency (*First Report and Order*) 61 FR 6212 (February 16, 1996), (*Second Report and Order*) 62 FR 41190 (July 31, 1997) and (Reconsideration Order) 64 FR 71042 (December 20, 1999). As discussed in greater detail herein, the Bureau proposes that Auction No. 36 be composed of 2,800 licenses in the 856–860 MHz band. Sixteen non-contiguous 5 channel blocks (0.25 MHz bandwidth) will be offered in each of 172 Economic Areas (EAs) and 3 EA-like areas, covering the United States, possessions or territories in the Northern Mariana Islands and Guam, American Samoa, the United States Virgin Islands and Puerto Rico.

2. The following table contains the Block/Frequency Band Limits Cross-Reference List for the 800 MHz SMR lower 80 channels:

800 MHz SMR Lower 80 Channels (856–860 MHz Band)

Channel block	Channel No.	Base station frequencies (channel centers)
G	201, 241, 281, 321, 361	856–860.0125
H	202, 242, 282, 322, 362	856–860.0375
I	203, 243, 283, 323, 363	856–860.0625
J	204, 244, 284, 324, 364	856–860.0875
K	205, 245, 285, 325, 365	856–860.1125
L	206, 246, 286, 326, 366	856–860.1375
M	207, 247, 287, 327, 367	856–860.1625
N	208, 248, 288, 328, 368	856–860.1875
O	221, 261, 301, 341, 381	856–860.5125
P	222, 262, 302, 342, 382	856–860.5375
Q	223, 263, 303, 343, 383	856–860.5625
R	224, 264, 304, 344, 384	856–860.5875
S	225, 265, 305, 345, 385	856–860.6125
T	226, 266, 306, 346, 386	856–860.6375
U	227, 267, 307, 347, 387	856–860.6625
V	228, 268, 308, 348, 388	856–860.6875

The Balanced Budget Act of 1997, Public Law 105–33, 111 Stat. 251 (Budget Act) requires the Commission to ''ensure that, in the scheduling of any competitive bidding under this subsection, an adequate period is allowed * * * before issuance of bidding rules, to permit notice and comment on proposed auction procedures * * *.'' Consistent with the provisions of the Budget Act and to ensure that potential bidders have adequate time to familiarize themselves with the specific provisions that will govern the day-to-day conduct of an auction, the Commission directed the Bureau, under its existing delegated authority, to seek comment on a variety of auction-specific procedures prior to the start of each auction. *See* Amendment of Part 1 of the Commission's Rules-Competitive Bidding Proceeding (*Part 1 Order*) 62 FR 13540 (March 21, 1997), Amendment of Part 1 of the Commission's Rules-Competitive Bidding Procedures (*Part 1 Third Report and Order*) 63 FR 770 (January 7, 1998). We therefore seek comment on the following issues relating to Auction No. 36.

I. Auction Timing and Structure

A. Timing of the Auction

3. By this Public Notice, the Bureau proposes to schedule the start of Auction No. 36 on September 13, 2000. The scheduled start date for Auction No. 34, 800 MHz SMR general category frequencies, is August 23, 2000. The Bureau recognizes the interrelated nature of these two auctions and that interested parties may want to bid in both Auction No. 34 and Auction No. 36. As such, some licensees may find a different date for Auction No. 36 more convenient. We seek comment on the September 13, 2000, start date for Auction No. 36.

B. Simultaneous Multiple Round Auction Design

4. We propose to award the licenses in a single, simultaneous multiple-round auction to allow bidders to take advantage of any synergies that exist among licenses. This methodology offers every license for bid at the same time in successive bidding rounds. We seek comment on this proposal.

C. Upfront Payments and Initial Maximum Eligibility for Each Bidder

5. The Bureau has delegated authority and discretion to determine an appropriate upfront payment for each license being auctioned, taking into account such factors as the population in each geographic license area, and the value of similar spectrum. The upfront payment is a refundable deposit made by each bidder to establish eligibility to bid on licenses. Upfront payments related to the specific spectrum subject to auction protect against frivolous or insincere bidding and provide the Commission with a source of funds from which to collect payments owed at the end of the auction. *See* Implementation of section 309(j) of the Communications Act-Competitive Bidding (*Second Report and Order*) 59 FR 22980 (May 4, 1994). With these guidelines in mind, we propose for Auction No. 36 the following upfront payment formula.

License population * $0.001 (the result rounded to the nearest hundred for levels below $10,000 and to the nearest thousand for levels above $10,000) with a minimum of no less than $1000.00 per license.

All licenses, including the related license area population and upfront payment, are listed in Attachment A. We seek comment on this proposal. We further propose that the amount of the upfront payment submitted by a bidder will determine the initial maximum eligibility (as measured in bidding units) for each bidder. Upfront payments will not be attributed to specific licenses, but instead will be translated into bidding units to define a bidder's initial maximum eligibility, which cannot be increased during the auction. Thus, in calculating the upfront payment amount, an applicant must determine the *maximum* number of bidding units it may wish to bid on (or hold high bids on) in any single round, and submit an upfront payment

covering that number of bidding units. We seek comment on this proposal.

D. Activity Rules

6. In order to ensure that the auction closes within a reasonable period of time, an activity rule requires bidders to bid actively on a percentage of their maximum bidding eligibility during each round of the auction rather than waiting until the end to participate. A bidder that does not satisfy the activity rule will either lose bidding eligibility in the next round or must use an activity rule waiver (if any remain).

7. We propose to divide the auction into three stages: Stage One, Stage Two and Stage Three, each characterized by an increased activity requirement. The auction will start in Stage One. We propose that the auction will generally advance to the next stage (*i.e.,* from Stage One to Stage Two, and from Stage Two to Stage Three) when the auction activity level, as measured by the percentage of bidding units receiving new high bids, is approximately ten percent or below for three consecutive rounds of bidding in Stages One and Two. However, we further propose that the Bureau retain the discretion to change stages unilaterally by announcement during the auction. In exercising this discretion, the Bureau will consider a variety of measures of bidder activity including, but not limited to, the auction activity level, the percentages of licenses (as measured in bidding units) on which there are new bids, the number of new bids, and the percentage increase in revenue. We seek comment on these proposals.

8. For Auction No. 36, we propose the following activity requirements:

Stage One: In each round of the first stage of the auction, a bidder desiring to maintain its current eligibility is required to be active on licenses representing at least 80 percent of its current bidding eligibility. Failure to maintain the requisite activity level will result in a reduction in the bidder's bidding eligibility in the next round of bidding (unless an activity rule waiver is used). During Stage One, reduced eligibility for the next round will be calculated by multiplying the current round activity by five-fourths (5/4).

Stage Two: In each round of the second stage, a bidder desiring to maintain its current eligibility is required to be active on 90 percent of its current bidding eligibility. During Stage Two, reduced eligibility for the next round will be calculated by multiplying the current round activity by ten-ninths (10/9).

Stage Three: In each round of the third stage, a bidder desiring to maintain its current eligibility is required to be active on 98 percent of its current bidding eligibility. In this final stage, reduced eligibility for the next round will be calculated by multiplying the current round activity by fifty/forty-ninths (50/49).

We seek comment on these proposals.

E. Activity Rule Waivers and Reducing Eligibility

9. Use of an activity rule waiver preserves the bidder's current bidding eligibility despite the bidder's activity in the current round being below the required minimum level. An activity rule waiver applies to an entire round of bidding and not to a particular license. Activity waivers are principally a mechanism for auction participants to avoid elimination from the auction.

10. The FCC auction system assumes that bidders with insufficient activity would prefer to use an activity rule waiver (if available) rather than lose bidding eligibility. Therefore, the system will automatically apply a waiver (known as an ''automatic waiver'') at the end of any bidding period where a bidder's activity level is below the minimum required unless:

(i) There are no activity rule waivers available; or

(ii) The bidder overrides the automatic application of a waiver by reducing eligibility, thereby meeting the minimum requirements.

11. A bidder with insufficient activity that wants to reduce its bidding eligibility, rather than use an activity rule waiver, must affirmatively override the automatic waiver mechanism during the bidding period by using the reduce eligibility function in the software. In this case, the bidder's eligibility is permanently reduced to bring the bidder into compliance with the activity rules. Once eligibility has been reduced, a bidder will not be permitted to regain its lost bidding eligibility.

12. A bidder may proactively apply an activity rule waiver as a means to keep the auction open without placing a bid. If a bidder submits a proactive waiver (using the proactive waiver function in the bidding software) during a bidding period in which no bids are submitted, the auction will remain open and the bidder's eligibility will be preserved. Note: an automatic waiver invoked in a round in which there are no new valid bids will not keep the auction open.

13. We propose that each bidder in Auction No. 36, be provided with five activity rule waivers that may be used in up to five separate rounds at the bidder's discretion during the course of the auction. We seek comment on this proposal.

F. Information Relating to Auction Delay, Suspension or Cancellation

14. For Auction No. 36, we propose that, by public notice or by announcement during the auction, the Bureau may delay, suspend or cancel the auction in the event of natural disaster, technical obstacle, evidence of an auction security breach, unlawful bidding activity, administrative or weather necessity, or for any other reason that affects the fair and competitive conduct of competitive bidding. In such cases, the Bureau, in its sole discretion, may elect to: resume the auction starting from the beginning of the current round; resume the auction starting from some previous round; or cancel the auction in its entirety. Network interruption may cause the Bureau to delay or suspend the auction. We emphasize that exercise of this authority is solely within the discretion of the Bureau, and its use is not intended to be a substitute for situations in which bidders may wish to apply their activity rule waivers. We seek comment on this proposal.

II. Bidding Procedures

A. Round Structure

15. The Commission will use its Automated Auction System to conduct the electronic simultaneous multiple round auction format for Auction No. 36. The initial bidding schedule will be announced in a public notice to be released at least one week before the start of the auction, and will be included in the registration mailings. The simultaneous multiple round format will consist of sequential bidding rounds, each followed by the release of round results. Details regarding the location and format of round results will be included in the same public notice.

16. The Bureau has discretion to change the bidding schedule in order to foster an auction pace that reasonably balances speed with the bidders' need to study round results and adjust their bidding strategies. The Bureau may increase or decrease the amount of time for the bidding rounds and review periods, or the number of rounds per day, depending upon the bidding activity level and other factors. We seek comment on this proposal.

B. Reserve Price or Minimum Opening Bid

17. The Budget Act calls upon the Commission to prescribe methods by which a reasonable reserve price will be required or a minimum opening bid established when FCC licenses are subject to auction (*i.e.,* because the Commission has accepted mutually

exclusive applications for those licenses), unless the Commission determines that a reserve price or minimum bid is not in the public interest. Consistent with this mandate, the Commission has directed the Bureau to seek comment on the use of a minimum opening bid and/or reserve price prior to the start of each auction

18. Normally, a reserve price is an absolute minimum price below, which an item will not be sold in a given auction. Reserve prices can be either published or unpublished. A minimum opening bid, on the other hand, is the minimum bid price set at the beginning of the auction below which no bids are accepted. It is generally used to accelerate the competitive bidding process. Also, in a minimum opening bid scenario, the auctioneer generally has the discretion to lower the amount later in the auction. It is also possible for the minimum opening bid and the reserve price to be the same amount.

19. In anticipation of this auction and in light of the Budget Act, the Bureau proposes to establish minimum opening bids for Auction No. 36. The Bureau believes a minimum opening bid, which has been utilized in other auctions, is an effective bidding tool. *See* Auction of 800 MHz SMR, Minimum Opening Bids or Reserve Prices (DA 97–2147) 62 FR 55251 (October 23, 1997), Auction of the Phase II 220 MHz Service Licenses (DA 98–1010) 63 FR 35213 (June 29, 1998). A minimum opening bid, rather than a reserve price, will help to regulate the pace of the auction and provides flexibility.

20. Specifically, for Auction No. 36, the Commission proposes the following formula for calculating minimum opening bids for each license, based on the population (''pops'') of the relevant EA:

License population * $0.001 (the result rounded to the nearest hundred for results less than $10,000 and to the nearest thousand for results greater than $10,000) with a minimum of no less than $1000.00 per license.

We seek comment on this proposal. All licenses including the related license area population and the proposed minimum opening bid, are listed in Attachment A. If commenters believe the formula proposed for minimum opening bids will result in substantial numbers of unsold licenses, or is not a reasonable amount, or should instead operate as a reserve price, they should explain why this is so, and comment on the desirability of an alternative approach. Commenters are advised to support their claims with valuation analyses and suggested reserve prices or minimum opening bid levels or formulas. In establishing the formula for minimum opening bids, we particularly seek comment on such factors as, among other things, the amount of spectrum being auctioned, levels of incumbency, the availability of technology to provide service, the size of the geographic service areas, issues of interference with other spectrum bands and any other relevant factors that could reasonably have an impact on valuation of the 800 MHz band. Alternatively, comment is sought on whether, consistent with the Budget Act, the public interest would be served by having no minimum opening bid or reserve price.

C. Minimum Accepted Bids and Bid Increments

21. Once there is a standing high bid on a license, a bid increment will be applied to that license to establish a minimum acceptable bid for the following round. For Auction No. 36, we propose to use a smoothing methodology to calculate bid increments, as we have done in several other auctions. The Bureau retains the discretion to change the minimum bid increment if it determines that circumstances so dictate. The Bureau will do so by announcement in the Automated Auction System. We seek comment on these proposals.

22. The exponential smoothing formula calculates the bid increment for each license based on a weighted average of the activity received on each license in all previous rounds. This methodology will tailor the bid increment for each license based on activity, rather than setting a global increment for all licenses. For every license that receives a bid, the bid increment for the next round for that license will be established using the exponential smoothing formula.

23. The calculation of the percentage bid increment for each license in a given round is made at the end of the previous round. The computation is based on an activity index, which is calculated as the weighted average of the activity in that round and the activity index from the prior round. The activity index at the start of the auction (round 0) will be set at 0. The current activity index is equal to a weighting factor times the number of new bids received on the license in the most recent bidding round plus one minus the weighting factor times the activity index from the prior round. The activity index is then used to calculate a percentage increment by multiplying a minimum percentage increment by one plus the activity index with that result being subject to a maximum percentage increment. The Commission will initially set the weighting factor at 0.5, the minimum percentage increment at 0.1, and the maximum percentage increment at 0.2.

Equations

$A_i = (C * B_i) + ((1-C) * A_{i-1})$

I_{i+1} = smaller of ((1 + A_i) * N) and M

Where,

A_i = activity index for the current round (round i)

C = activity weight factor

B_i = number of bids in the current round (round i)

A_{i-1} = activity index from previous round (round i − 1), A_0 is 0

I_{i+1} = percentage bid increment for the next round (round i+1)

N = minimum percentage increment or bid increment floor

M = maximum percentage increment or bid increment ceiling

Under the exponential smoothing methodology, once a bid has been received on a license, the minimum acceptable bid for that license in the following round will be the new high bid plus the dollar amount associated with the percentage increment (variable I_{i+1} from above times the high bid). This result will be rounded to the nearest thousand if it is over ten thousand or to the nearest hundred if it is under ten thousand.

Examples

License 1

C=0.5, N = 0.1, M = 0.2

Round 1 (2 New Bids, High Bid = $1,000,000)

i. Calculation of percentage increment for round 2 using exponential smoothing:

$A_1 = (0.5 * 2) + (0.5 * 0) = 1$

I_2 = The smaller of (1 + 1) * 0.1 = 0.2 or 0.2 (the maximum percentage increment)

ii. Minimum bid increment for round 2 using the percentage increment (I_2 from above)

0.2 * $1,000,000 = $200,000

iii. Minimum acceptable bid for round 2 = 1,200,000

Round 2 (3 New Bids, High Bid = 2,000,000)

i. Calculation of percentage increment for round 3 using exponential smoothing:

$A_2 = (0.5 * 3) + (0.5 * 1) = 2$

I_3 = The smaller of (1 + 2) * 0.1 = 0.3 or 0.2 (the maximum percentage increment)

ii. Minimum bid increment for round 3 using the percentage increment (I_3 from above)

0.2 * $2,000,000 = $400,000

iii. Minimum acceptable bid for round 3 = 2,400,000

Round 3 (1 New Bid, High Bid = 2,400,000)

i. Calculation of percentage increment for round 4 using exponential smoothing:

$A_3 = (0.5 * 1) + (0.5 * 2) = 1.5$

I_4 = The smaller of (1 + 1.5) * 0.1 = 0.25 or 0.2 (the maximum percentage increment)

ii. Minimum bid increment for round 4 using the percentage increment (I_4 from above)

0.2 * $2,400,000 = $480,000

iii. Minimum acceptable bid for round 4 = 2,880,000

D. Information Regarding Bid Withdrawal and Bid Removal

24. For Auction No. 36, we propose the following bid removal and bid withdrawal procedures. Before the close of a bidding period, a bidder has the option of removing any bids placed in that round. By using the remove bid function in the software, a bidder may effectively ''unsubmit'' any bid placed within that round. A bidder removing a bid placed in the same round is not subject to withdrawal payments.

25. Once a round closes, a bidder may no longer remove a bid. However, in the next round, a bidder may withdraw standing high bids from previous rounds using the withdraw bid function. A high bidder that withdraws its standing high bid from a previous round is subject to the bid withdrawal payment provisions. We seek comment on these bid removal and bid withdrawal procedures.

26. In the *Part 1 Third Report and Order,* the Commission explained that allowing bid withdrawals facilitates efficient aggregation of licenses and the pursuit of efficient backup strategies as information becomes available during the course of an auction. The Commission noted, however, that, in some instances, bidders may seek to withdraw bids for improper reasons. The Bureau, therefore, has discretion, in managing the auction, to limit the number of withdrawals to prevent any bidding abuses. The Commission stated that the Bureau should assertively exercise its discretion, consider limiting the number of rounds in which bidders may withdraw bids, and prevent bidders from bidding on a particular market if the Bureau finds that a bidder is abusing the Commission's bid withdrawal procedures.

27. Applying this reasoning, we propose to limit each bidder in Auction No. 36, to withdraw standing high bids in no more than two rounds during the course of the auction. To permit a bidder to withdraw bids in more than two rounds would likely encourage insincere bidding or the use of withdrawals for anti-competitive purposes. The two rounds in which withdrawals are utilized will be at the bidder's discretion; withdrawals otherwise must be in accordance with the Commission's rules. There is no limit on the number of standing high bids that may be withdrawn in either of the rounds in which withdrawals are utilized. Withdrawals will remain subject to the bid withdrawal payment provisions specified in the Commission's rules. We seek comment on this proposal.

E. Stopping Rule

28. For Auction No. 36, the Bureau proposes to employ a simultaneous stopping rule approach. The Bureau has discretion ''to establish stopping rules before or during multiple round auctions in order to terminate the auction within a reasonable time.'' A simultaneous stopping rule means that all licenses remain open until the first round in which no new acceptable bids, proactive waivers or withdrawals are received. After the first such round, bidding closes simultaneously on all licenses. Thus, unless circumstances dictate otherwise, bidding would remain open on all licenses until bidding stops on every license.

29. The Bureau seeks comment on a modified version of the simultaneous stopping rule. The modified stopping rule would close the auction for all licenses after the first round in which no bidder submits a proactive waiver, a withdrawal, or a new bid on any license on which it is not the standing high bidder. Thus, absent any other bidding activity, a bidder placing a new bid on a license for which it is the standing high bidder would not keep the auction open under this modified stopping rule. The Bureau further seeks comment on whether this modified stopping rule should be used unilaterally or only in Stage Three of the auction.

30. We propose that the Bureau retain the discretion to keep an auction open even if no new acceptable bids or proactive waivers are submitted and no previous high bids are withdrawn. In this event, the effect will be the same as if a bidder had submitted a proactive waiver. The activity rule, therefore, will apply as usual and a bidder with insufficient activity will either lose bidding eligibility or use a remaining activity rule waiver.

31. Finally, we propose that the Bureau reserve the right to declare that the auction will end after a specified number of additional rounds (''special stopping rule''). If the Bureau invokes this special stopping rule, it will accept bids in the final round(s) only for licenses on which the high bid increased in at least one of the preceding specified number of rounds. The Bureau proposes to exercise this option only in certain circumstances, such as, for example, where the auction is proceeding very slowly, there is minimal overall bidding activity, or it appears likely that the auction will not close within a reasonable period of time. Before exercising this option, the Bureau is likely to attempt to increase the pace of the auction by, for example, moving the auction into the next stage (where bidders would be required to maintain a higher level of bidding activity), increasing the number of bidding rounds per day, and/or increasing the amount of the minimum bid increments for the limited number of licenses where there is still a high level of bidding activity. We seek comment on these proposals.

Federal Communications Commission.

Louis J. Sigalos,

Deputy Chief, Auctions & Industry Analysis Division.

[FR Doc. 00–7969 Filed 3–30–00; 8:45 am]

BILLING CODE 6712–01–P

FEDERAL LABOR RELATIONS AUTHORITY

[FLRA Docket No. 0–NG–2353]

Notice of Opportunity To Submit Amicus Curiae Briefs in a Negotiability Proceeding Pending Before the Federal Labor Relations Authority; Withdrawal of Notice

AGENCY: Federal Labor Relations Authority.

ACTION: Notice of withdrawal of the request (65 FR 13763) for amicus curiae briefs in a proceeding before the Federal Labor Relations Authority.

SUMMARY: The Federal Labor Relations Authority had previously invited all interested parties to file briefs as amici curiae on significant issues arising in a case pending before the Authority. Because that case is no longer pending, the Authority withdraws its requests for briefs.

FOR FURTHER INFORMATION CONTACT: Peter Constantine, Director, Case Control Office, Federal Labor Relations Authority, (202) 482–6540.

SUPPLEMENTARY INFORMATION: On March 14, 2000, the Authority issued a notice, which was published in the **Federal Register** on March 14, 2000 (65 FR 13763), inviting interested parties to submit briefs in a proceeding before the Federal Labor Relations Authority in which the Authority has been asked to reconsider how management's statutory rights to direct employees and to assign work should be interpreted in relation to proposals that establish the number of performance rating levels for individual job elements and summary ratings. After this notice was published, the agency withdrew its allegation of non-negotiability, and the union withdrew its petition for review of negotiability issues. Accordingly, on March 27, the Authority dismissed the case and no longer requests amicus briefs.

Dated: March 28, 2000.

For the Authority.

Peter Constantine,

Director of Case Control.

[FR Doc. 00–7954 Filed 3–30–00; 8:45 am]

BILLING CODE 6727–01–P

FEDERAL RESERVE SYSTEM

Sunshine Act Meeting

AGENCY HOLDING THE MEETING: Board of Governors of the Federal Reserve System.

TIME AND DATE: 10:00 a.m., Wednesday, April 5, 2000.

PLACE: Marriner S. Eccles Federal Reserve Board Building, 20th and C Streets, N.W., Washington, D.C. 20551.

STATUS: Closed.

MATTERS TO BE CONSIDERED:

1. Personnel actions (appointments, promotions, assignments, reassignments, and salary actions) involving individual Federal Reserve System employees.

2. Any matters carried forward from a previously announced meeting.

CONTACT PERSON FOR MORE INFORMATION: Lynn S. Fox, Assistant to the Board; 202–452–3204.

SUPPLEMENTARY INFORMATION: You may call 202–452–3206 beginning at approximately 5 p.m. two business days before the meeting for a recorded announcement of bank and bank holding company applications scheduled for the meeting; or you may contact the Board's Web site at http://www.federalreserve.gov for an electronic announcement that not only lists applications, but also indicates procedural and other information about the meeting.

Dated: March 29, 2000.

Robert deV. Frierson,

Associate Secretary of the Board.

[FR Doc. 00–8086 Filed 3–29–00; 10:08 am]

BILLING CODE 6210–01–P

FEDERAL TRADE COMMISSION

Granting of Request for Early Termination of the Waiting Period Under the Premerger Notification Rules

Section 7A of the Clayton Act, 15 U.S.C. 18a, as added by Title II of the Hart-Scott-Rodino Antitrust Improvements Act of 1976, requires persons contemplating certain mergers or acquisitions to give the Federal Trade Commission and the Assistant Attorney General advance notice and to wait designated periods before consummation of such plans. Section 7A(b)(2) of the Act permits the agencies, in individual cases, to terminate this waiting period prior to its expiration and requires that notice of this action be published in the **Federal Register**.

The following transactions were granted early termination of the waiting period provided by law and the premerger notification rules. The grants were made by the Federal Trade Commission and the Assistant Attorney General for the Antitrust Division of the Department of Justice. Neither agency intends to take any action with respect to these proposed acquisitions during the applicable waiting period.

TRANSACTIONS GRANTED EARLY TERMINATION

Trans No. and acquiring	Acquired	Entities
JAN. 18, 2000		
20000877—Brian L. Roberts	Mr. H.F. Lenfest	Lenfest Communications, Inc.
20000878—Brian L. Roberts	AT&T Corp	Lenfest Communications, Inc.
20001218—E.I du Pont de Nemours and Company	Burmah Castrol plc	Castrol Indsutrial North America, Inc.
JAN. 19, 2000		
20001217—Burman Castrol plc	E.I. du Pont de Nemours and Company.	E.I. du Pont de Nemours and Company.
20001268—Safeguard International Fund, L.P	Golden Bear Oil Specialties, Inc	Golden Bear Oil Specialties, Inc.
20001297—Tenet Healthcare Corporation	Tendex, Inc	Tendex, Inc.
20001303—Centre Capital Investors III, L.P	Kjell Inge Rokke	American Seafoods Company. Frionor U.S.A., Inc. Resource Group International, Inc.
20001305—Centre Capital Investors Ill, L.P	Jaeger Investment Company	NJ Vessel Corporation.
20001352—Gerald Gorman	Netmoves Corporation	Netmoves Corporation.
20001355—The AES Corporation	The AES Corporation	BV Partners.
20001371—Kirtland Capital Partners III L.P	Donald and Barbara Battis	Accurate Fabricators, Inc. Profile Realty, Inc., Profile Metal Forming, Inc. S&H Precision Manufacturing Co., Inc., Profile, Inc.
20001372—Global Crossing Ltd	StorageNetworks, Inc	StorageNetworks, Inc.
20001373—Dell Computer Corporation	StorageNetworks, Inc	StorageNetworks, Inc.
20001387—Ralcorp Holdings, Inc	Cascade Acquisition, Inc	Cascade Acquisition, Inc.
JAN. 20, 2000		
20001266—Office Specialties, Inc. d/b/a/ INSCAPE	SMED International Inc	SMED International Inc.
20001378—Thomas H. Lee Foreign Fund IV–B, L.P	MJD Communications, Inc	MJD Communications, Inc.
20001383—Thomas H. Lee Equity Fund IV, L.P	MJD Communications, Inc	MJD Communications, Inc.

TRANSACTIONS GRANTED EARLY TERMINATION—Continued

Trans No. and acquiring	Acquired	Entities
JAN. 21, 2000		
20001231—Bristol-Myers-Squibb Company	OXiGENE, Inc	OXiGENE, Europe, AB.
20001286—PPG Industries, Inc	The Monarch Paint Company	Monarch Paint Company I, Ltd.
20001306—SOFTBANK Corp.	Law.com, Inc	Law.com, Inc.
20001357—Nortel Networks Corporation	Qtera Corporation	Qtera Corporation.
JAN. 24, 2000		
20001255—SunGard Data Systems Inc	Michael J. & Marianne Cassidy	Cassidy Jones & Co., Inc.
20001256—Consolidated Electrical Distributors, Inc	Dauphin Associates, Inc. Employee Stock Ownership Plan.	Dauphin Associates, Inc.
20001260—El Paso Energy Corporation	MCN Energy Group, Inc	MCNIC CSG Pipeline Company
20001307—The Associates First Capital Corporation	KeyCorp	Key Bank USA, N.A.
20001334—CheckFree Holdings Corporation	BlueGill Technologies, Inc	BlueGill Technologies, Inc.
20001359—Bill Gross' idealab!, Inc	GoTo.com, Inc	GoTo.com, Inc.
20001362—Qwest Communications International Inc	USInternetworking, Inc	USInternetworking, Inc.
20001364—Qwest Communications International Inc	Global Crossing Ltd	Global Crossing Ltd.
20001376—WPG Corporate Development Associates V, LLC*	Leonard N. Stern	City Pages, Inc Cleveland Free Times, Inc. Long Island Voice, Inc. Los Angeles Weekly, Inc. OC Weekly, Inc. Quickfish Media, Inc. Stern Publishing, Inc. VV Publishing Corporation.
20001381—Isle of Capri Casinos, Inc	Lady Luck Gaming Corporation	Lady Luck Gaming Corporation.
20001384—Corporacion Patricio Echeverria, S.A	Ingersoll-Rand Company	The Corona Clipper Division Clipper of Harrow Products, Inc.
20001388—NOVA Corporation	Frank L. Farrar	First Savings Bank Merchant Division, Inc.
20001430—Drugstore.com, Inc	Roger Barnett	Beauty.com, Inc.
20001431—Roger Barnett	Drugstore.com, Inc	Drugstore.com, Inc.
JAN. 27, 2000		
20001304—BYOWC Partners LLC	Bridgeport Holdings Inc	Bridgeport Holdings Inc.
20001316—FS Equity Partners IV, L.P	Bridgeport Holdings Inc	Bridgeport Holdings Inc.
20001348—Blackstone CCC Capital Partners L.P	Sirius Satellite Radio Inc	Sirius Satellite Radio Inc.
20001379—Interpublic Group of Companies, Inc (The)	NFO Worldwide, Inc	NFO Worldwide, Inc.
20001389—BCI Growth V, L.P	ATG Group, Inc	ATG Group, Inc.
20001395—Warren A. Hood, Jr	Owens Corning	Falcon Foam Corporation.
20001396—Clayton, Dublier & Rice Fund VI L.P	Carl A. Albert	Fairchild Aerospace Corporation.
20001399—Merrill Lynch & Co., Inc	Multex.com, Inc	Multex.com, Inc.
20001406—WellPoint Health Networks Inc	Rush-Presbyterian-St. Luke's Medical Center.	Rush Prudential Health Plans.
20001407—WellPoint Health Networks Inc	The Prudential Insurance Company of America.	Rush Prudential Health Plans.
20001409—Churchill Environmental & Industrial Equity Partners, L.P.	Allied Waste Industries, Inc	Browning-Ferris Industries of Hawaii/Maui Disposal Co., Inc. Maui Disposal Co., Inc.
20001411—L–3 Communications Holdings, Inc	Raytheon Company	AMI Instruments, Inc. Raytheon Company.
20001416—Amercian Standard Companies, Inc	Howell E. Adams, Jr	Georgia Air Conditioning Company, Inc.
20001417—United Rentals, Inc	Ronald D. Offutt	RDO Rental Co.
20001418—Mohr, Davidow Ventures, IV, L.P	ChannelPoint, Inc	ChannelPoint, Inc.
20001419—Landmark Communications, Inc	David Altomare	Brento Coporation
20001420—Cox Enterprises, Inc	David Altomare	Brento Corporation.
20001424—CMGI, Inc	Raging Bull, Inc	Raging Bull, Inc.
20001428—Knight Transportation, Inc	John R. Fayard	John Fayard Fast Freight, Inc.
20001429—Willis Stein & Partners II, L.P	SOFTBANK Corp	ZD Inc.
20001432—Whittman-Hart, Inc	USWeb Corporation	USWeb Corporation, a Delaware corporation.
20001435—Green Equity Investors III, L.P	InterDent, Inc	InterDent, Inc.
20001438—Magellan Health Services, Inc	Vivra Holdings, Inc	Vivra, Inc.
20001442—Heritage Fund II, L.P	Gerald Yablans	P.O.P. Displays, Inc.
20001443—Mr. Robert Alpert	Castle Harian Parnters III, L.P	LNS Holding Corp.
20001445—Deutsche Bank AG	Richard L. Gelb	The Charter Corporation.
20001446—Deutsche Bank AG	Bruce S. Gelb	The Charter Corporation.
20001450—Expro International Group PLC	TriPoint, Incorporated	Tri Point, Incorporated.
20001460—Gilat Communications Ltd	The Times Mirror Company	Allen Communication.
20001464—Career Education Corporation	California Culinary Academy, Inc	California Culinary Academy, Inc.
20001468—Mazda Motor Corporation	Transnational Motors, Inc	Transnational Motors, Inc.
20001474—Safeguard International Fund, L.P	Richard W. Bowen II	International Filler Corp.
20001475—Cliffstar Corporation	Northland Cranberries, Inc	Northland Cranberries, Inc.

TRANSACTIONS GRANTED EARLY TERMINATION—Continued

Trans No. and acquiring	Acquired	Entities
20001479—Kleiner Perkins Caufield & Byer VIII, L.P	Redback Networks Inc	Redback Networks Inc.
20001480—KPCB VIII Founders Fund, L.P	Redback Networks Inc	Redback Networks Inc.
20001481—KPCB Information Sciences Zaibatsu Fund II, L.P	Redback Networks Inc	Redback Networks Inc.
20001482—St. Ives plc	Global Financial Press, a New York Corporation.	Global Financial Press, a New York Corporation.
20001488—Thoma Cressey Fund VI, L.P	PennCorp Financial Group, Inc	Occidental Life Insurance Company of North Carolina. Pioneer Security Life Insurance Company.
20001490—Torch Acquisition Company	Oracle Corporation	Oracle Corporation.
20001492—Advance Communications Group, Inc	Richard O'Neal	Big Stuff, Inc.
20001497—MVP.com, Inc	SportsLine.com, Inc	Golf Club Trader, Inc. International Gold Outlet, Inc. TennisDirect.com, Inc.
20001498—SportsLine.com, Inc	MPV.com, Inc	MVP.com, Inc.
JAN. 28, 2000		
20001393—Richard A. Bernstein	I. Epstein & Sons, Inc	I. Epstein & Sons/New York, Inc.
20001415—Bell Atlantic Master Trust	Bridgeport Holdings Inc	Bridgeport Holdings Inc.
JAN. 30, 2000		
20001520—William S. Morris III and Mary Sue Ellis (husband and wife).	Mediacom Communications Corporation.	Mediacom Communications Corporation.
20001521—Rocco B. Commisso	Mediacom Communications Corporation.	Mediacom Communications Corporation.
JAN. 31, 2000		
20001319—Healtheon/WebMD Corporation	Electronic Data Systems Corporation.	Kinetra LLC.
20001408—Money's Mushrooms Ltd	Vlasic Foods International Inc	Vlasic Foods International Inc.
20001473—George G. Beasley	George G. Beasley	Beasley Reed Acquisition Partnership.
20001500—Cox Enterprises, Inc	Rapid Communications Partners, L.P.	Rapid Communications Partners, L.P.
20001510—Elisabeth Badinter	Bernard and Miriam Frankel (husband and wife).	Frankel & Company.
20001511—Washington Mutual, Inc	Lehman Brothers Holdings, Inc	Alta Residential Mortgage, Inc.
20001513—Citizens Utilities Company	GTE Corporation	GTE Midwest Incorporated, GTE North Incorporated.
20001539—DICOM Group plc	Imaging Components Corporation.	Imaging Components Corporation.
FEB. 1, 2000		
20001382—Goodman Manufacturing Company, L.P	William H. Hegamyer	Pioneer Metals, Inc.
20001507—AT&T Corp	AT&T Corp	United Cable Television of Baltimore Limited Partnership.
20001512—Fremont Partners L.P	QualPro, Inc	QualPro, Inc.
20001517—Crosspoint Venture Partners-1999 L.P	SiteLine, Inc	SiteLine, Inc.
20001523—ASCo Group plc	Mary Lou Conrad	Venture Transport Inc.
20001524—Daniel S. Aegerter	Ariba, Inc	Ariba, Inc.
20001526—Siemens Aktiengesellschaft	Moore Products Co	Moore Products Co.
20001531—SOFTBANK Corp	AllAdvantage.com	AllAdvantage.com.
20001541—Transhumance Employee Stock Ownership Trust	Donald DeBey	Mountain Meadows Lamb Corporation.
20001542—Transhumance Employee Stock Ownership Trust	Verner W. Averch	Mountain Meadows Lamb Corporation.
20001543—Star Gas Partners, L.P	All Star Gas Corp	All Star Gas Corp.
20001545—Outsourcing Services Group, Inc	David G. Knust and Susan L. Purkrabek.	K.P. Properties. Precision Packaging and Services, Inc.
20001547—Quanta Services, Inc	Dennis G. Klumb	Arby Construction, Inc.
20001548—RCBA Strategic Partners, L.P	Playtex Products, Inc	Playtex Products, Inc.
20001552—Peco Energy Company	NorthEast Optic Network, Inc	NEON Communications, Inc.
20001553—Jorge Mas	MasTec, Inc	MasTec. Inc.
20001559—Cypress Merchant Banking Partners II L.P	Hannaford Bros. Co	Home Runs.com. Inc.
20001562—Phillip Morris Companies, Inc	Boca Holdings, Inc	Boca Holdings, Inc.
20001563—Edward S. Rogers	AT&T Corp	At Home Corporation.
FEB. 2, 2000		
19994747—Allied Waste Industries, Inc	James E. Galante	Advanced Recycling Corp. Advanced Waste Systems, Inc. Automated Waste Disposal, Inc. Diversified Waste Disposal, Inc. Environmental systems, Inc. Ny-Conn Waste Recylcing, Inc. Superior Waste Disposal, Inc.
20001440—Blackstone CCC Capital Partners L.P	Arunas A. Chesonis	PaeTec Corp.
20001441—Madison Dearborn Capital Parnters III, L.P	Arunas A. Chesonis	PaeTec Corp.

TRANSACTIONS GRANTED EARLY TERMINATION—Continued

Trans No. and acquiring	Acquired	Entities
200011489—Odyssey Investment Partners Fund, LP	IWO Holdings, Inc	IWO Holdings, Inc.
FEB. 3, 2000		
20001444—Carl C. Icahn	Prison Realty Trust, Inc	Prison Realty Trust, Inc.
20001486—Bank Austria Aktiengesellschaft	Rice partners II, L.P	Cherokee Sanford Group, LLC.
20001487—Koceram N.V	Rice Partners II, L.P	Cherokee Sanford Group, LLC.
FEB. 4, 2000		
20000612—Thyssen-Bornemisza Continuity Trust	Vertex Communications Corporation.	Vertex Communications Corporation.
20001397—Voest-Alpine Stahl A.G	Barlow W. Brooks, Jr	Roll Forming Corporation.
20001398—Voest-Alpine Stahl A.G	J. William Brooks	Roll Forming Corporation.
FEB. 7, 2000		
20001394—MJD Communications, Inc	TPG Partners, L.P	TPG Communications, Inc.
20001400—BASF Aktiengesellschaft	Rohm and Haas Company	Morton International, Inc.
20001410—Kyocera Corporation	QUALCOMM Incorporated	QUALCOMM Incorporated.
20001421—Entravision Communications Company, L.L.C	Latin Communications Group Inc	Latin Communications Group Inc.
20001433—Emerson Electric Co	Knaack Manufacturing Company	Knaack Manufacturing Company.
20001434—MAPFRE Mutualidad	Allchurches Trust Limited	Chatham Holdings, Inc.
20001437—Federal Signal Corporation	PCS Company	PCS Company.
20001448—Telephone and Data Systems, Inc. Voting First	Southeast Telephone Company of Wisconsin, Inc.	Southeast Telephone Company of Wisconsin, Inc.
20001455—Solectron Company	Alcatel	Alcatel USA Sourcing, L.P. DSC of Puerto Rico, Inc.
20001456—James N. Blue	Unicom Corporation	Cotter Corporation.
20001457—Albert J. Latner	Dr. Robert Adams	LabSouth, Inc.
20001465—SOFTBANK Corp	SmartAge Corp	SmartAge Corp.
20001469—Electronic Arts Inc	Dreamworks L.L.C	Dreamworks Interactive L.L.C.
20001472—McLeod USA Incorporated	Spiltrock Services, Inc	Splitrock Services, Inc.
20001476—VHA Southwest Community Health Corporation	Memorial Hermann Healthcare System.	Baptist Hospital, Orange. Baptist Hospital of Southeast Texas.
20001491—Resurrection Health Care Corporation	The Catholic Bishop of Chicago	Catholic Charities of the Archdiocese of Chicago.
20001494—William L. Sauder	Joseph S. Palencar	M&M Sale Corp.
20001495—ReliaStar Financial Corp	The BISYS Group, Inc	BISYS Brokerage Services, Inc. BWC Investment Services, Inc.
20001499—Salton, Inc	George Foreman	George Foreman.
20001501—United News & Media plc	Carlton Communications Plc	Carlton Communications Plc.
20001502—Phillip R. Bennett	Barry J. Lind	Lind-Waldock & Company.
20001528—EarthCare Company	World Fuel Services Corp	International Petroleum Corporation.
20001589—Morgan Stanley Dean Witter & Co	Commerce One, Inc	Commerce One, Inc.
20001590—Wells Fargo & Company	Redback Networks Inc	Redback Networks, Inc.
20001591—First Reserve Fund VIII, L.P	COR–VAL, Inc	COR–VAL, Inc.
FEB. 8, 2000		
20001459—Warmer Chilcott Public Limited Company	Bristol-Myers Squibb Company	Bristol-Myers Squibb Company.
20001529—Sanmina Corporation	Alcatel	Alcatel USA Sourcing, L.P.
20001532—Robert A. Daly	News Corporation Limited (The)	Fox Baseball Holdings, Inc.
20001533—The Great Universal Stores P.L.C	Mr. Timothy J. Keane	Retail Target Marketing Systems, Inc.
20001540—The St. Paul Companies, Inc	MMI Companies, Inc	MMI Companies, Inc.
20001549—Flextronics International Ltd	Cabletron Systems, Inc	Cabletron Systems, Inc.
20001564—Vignette Corporation	DataSage, Inc.	DataSage, Inc.
20001566—Aliant Inc	N.V. Koninklijke Nederlandsche Petroleum Maatschappij.	Shell Offshore Service Company
20001567—Robert Wood Johnson IV	The Estate of Leon Hess	The New York Jets Football Club, Inc.
20001568—Edward Wanandi	Frank Katz	Strick Corporation.
20001570—Prudential plc	Susan Zolla	Packaging Advantage Corp.
20001572—Avant! Corporation	Analogy, Inc	Analogy, Inc.
20001573—Lady Lucky Gaming Corporation	Andrew H. Tompkins	Gemini, Inc. International Marco Polo's Services, Inc.
20001574—USFreightways Corporation	Transport Corporation of America, Inc.	Transport Corporation of America, Inc.
20001577—Hoganas A.B	ChemFirst Inc	FRM Industries, Inc.
20001580—Fabri-Steel Products Incorporated	TRW Inc	Nelson Stud Welding Division of TRW.
20001584—Clear Channel Communications, Inc	Faith Broadcasting, L.P	Faith Broadcasting, L.P.
20001585—Prudential Insurance Company of America (The)	St. Paul Companies, Inc. (The)	THI Holdings (Delaware), Inc.
20001588—Haworth International, Ltd	LaCasse Inc	LeCasse Inc.
20001594—Loews Corporation	Gowin Holdings International Limited.	Gowin Holdings International Limited.
20001595—LaSalle Re Holdings Limited	Trenwick Group Inc	Trenwick Group Inc.
20001596—DLJ Merchant Banking Partner II, L.P	James D. & Margaret M. Brady-Nallo.	Precision Offset Printing Company, Inc. Precision Ollan Seal, Inc.

TRANSACTIONS GRANTED EARLY TERMINATION—Continued

Trans No. and acquiring	Acquired	Entities
20001600—The Western and Southern Life Insurance Company	ARM Financial Group, Inc	Integrity Life Insurance Company.
20001602—The Shelly Company	Ira L. Morris	Waco Oil & Gas., Inc.
20001606—Guidant Corporation	Impulse Dynamics, LLC	Impulse Dynamics N.V.
20001607—First Reserve Fund VIII, L.P	Preferred Industries, Inc	Preferred Industries, Inc.
20001609—Gerald W. Schwartz	Jannock Limited	Jannock Limited.
20001612—AutoNation, Inc	Dennis E. Breen	Horizon Chevrolet, Inc.
20001615—GPU, Inc	MYR Group Inc	MYR Group Inc.
20001617—Paul G. Desmarais	Allmerica Financial Corporation	First Allmerica Financial Life Insurance Company.
20001618—Flextronics International, Ltd	Palo Alto Products International (Pte.) Ltd. (''PAPI'').	Palo Alto Products International (Pte.) Ltd. (''PAPI'').
20001622—Mail-Well, Inc	American Business Products, Inc.	American Business Products, Inc.
20001623—Golden State Bancopr Inc	Downey Financial Corp	Downey Finance Corp.
20001626—Isle of Capri Casinos, Inc	BRDC, Inc	BRDC, Inc.
20001627—Robert S. Goldstein and Susan J. Goldstein (husband & wife).	Isle of Capri Casinos, Inc	Isle of Capri Casinos, Inc.
20001628—Bernard Goldstein and Irene S. Goldstein (husband & wife).	Isle of Capri Casinos, Inc	Isle of Capri Casinos, Inc.
20001634—Sigma Partners III, L.P	Vignette Corporation	Vignette Corporation
20001638—John Steven Late	AutoNation, Inc	Jack Sherman Chevrolet
20001640—Komatsu Ltd	Road Machinery Company	Road Machinery Company
20001651—Richard G Haworth	SMED International, Inc	SMED International, Inc.
20001652—CMGI, Inc	yesmail.com, inc	yesmail.com, inc.
20001656—Jerry Herbst	Alexander W. Rangos	Car Spa, Inc.
20001659—Charterhouse Equity Partners III, L.P	Whitehall Associates, L.P	reSOURCE PARTNER, Inc.
20001664—Baker Communications Fund, L.P	Sequoia Software Corporation	Sequoia Software Corporation
20001670—Captec Net Lease Realty, Inc	Patrick L. Beach	Captec Financial Group, Inc.
20001672—Industrial Services Group, Inc	Dale Smith	Palestine Concrete Tile Company
20001673—Industrial Services Group, Inc	Danny Smith	Palestine Concrete Tile Company
20001674—Centre Capital Investors III, L.P	Michael Lee Malamut	Autoland, Inc.
20001690—Bracknell Corporation	Michael L. Morrissey	Sylvan Industrial Piping Of N.J., Inc. Sylvan Industrial Piping of Tennessee, Inc. Sylvan Industrial Piping, Inc.
FEB. 9, 2000		
20001179—WHX Corporation	Bethlehem Steel Corporation	Bethlehem Steel Corporation.
20001402—CBS Corporation	SportsLine.com, Inc	SportLine.com, Inc.
20001466—Smiths Industries plc	SIHI/EMC Investors LLC	EMC Technology LLC
20001555—American Tower Corporation	James A.R. Veeder	U.S. Electrodynamics, Inc.
20001582—The Edward W. Scripps Trust	Freedom Communications, Inc	Florida Freedom Newspapers, Inc.
20001597—CPL Long Term Care Real Estate Investment Trust	Renaissance Healthcare Corporation.	Oakridge Nursing Home, Inc. Renaissance-Chapel Hill, Inc. Renaissance-Fox Chase, Inc. Renaissance-Hamilton Plaza, Inc. Renaissance-Iliff, Inc. Renaissance-Park Manor, Inc. Renaissance-Valley View, Inc.
20001605—Estate of Charles A. Sammons	Estate of Charles C. Carson	E.R. Craven Company.
20001613—BG Distribution Partners, Ltd	Terk Distributing Company, Inc	Terk Distributing Company, Inc.
20001616—Bank of America Corporation	VeloCom Inc	VeloCom Inc.
20001636—General Electric Company	Macklanburg-Duncan Co	Macklanburg-Duncan Co.
20001642—Baxter International Inc	XOMA Ltd	XOMA Ireland Limited.
20001687—Telefonos de Mexico, S.A. de C.V	Grupo Carso, S.A.. de C.V	TPC Acquisition Corp.
FEB. 10, 2000		
20001556—KKR 1996 Fund L.P	Intermedia Communications Inc	Intermedia Communications Inc.
20001657—Berkshire Hathaway, Inc	CORT Business Services Corporation.	CORT Business Services Corporation.
FEB. 11, 2000		
20001449—Gerald W. Schwartz	International Business Machines Corporation.	International Business Machines Corporation.
20001483—Compaq Computer Corporation	InaCom Corp	InaCom Corp. InaCom International, Inc. Sysorex Corporation. Vanstar Corporation.
20001579—Atlantic Equity Partners International II, L.P	Trust u/w/o Edward S. Litchfield	Poly-Seal Corporation.
20001599—Apple Computer, Inc	Earthlink Network, Inc	Earthlink Network, Inc.

FOR FURTHER INFORMATION CONTACT: Sandra M. Peay or Parcellena P. Fielding, Contact Representatives, Federal Trade Commission, Premerger Notification Office, Bureau of Competition, Room 303, Washington, DC 20580, (202) 326–3100.

By direction of the Commission.

Donald S. Clark,

Secretary.

[FR Doc. 00–7971 Filed 3–30–00; 8:45 am]

BILLING CODE 6750–01–M

DEPARTMENT OF HEALTH AND HUMAN SERVICES

Food and Drug Administration

[Docket No. 00N–1072]

Agency Information Collection Activities: Proposed Collection; Comment Request; Administrative Detention and Banned Medical Devices

AGENCY: Food and Drug Administration, HHS.

ACTION: Notice.

SUMMARY: The Food and Drug Administration (FDA) is announcing an opportunity for public comment on the proposed collection of certain information by the agency. Under the Paperwork Reduction Act of 1995 (the PRA), Federal agencies are required to publish notice in the **Federal Register** concerning each proposed collection of information, including each proposed extension of an existing collection of information, and to allow 60 days for public comment in response to the notice. This notice solicits comments on reporting and recordkeeping requirements imposed on entities that have had products detained during an establishment inspection that are believed to be adulterated or misbranded, or have had products banned.

DATES: Submit written comments on the collection of information by May 30, 2000.

ADDRESSES: Submit written comments on the collection of information to the Dockets Management Branch (HFA–305), Food and Drug Administration, 5630 Fishers Lane, rm. 1061, Rockville, MD 20852. All comments should be identified with the docket number found in brackets in the heading of this document.

FOR FURTHER INFORMATION CONTACT: Peggy Schlosburg, Office of Information Resources Management (HFA–250), Food and Drug Administration, 5600 Fishers Lane, Rockville, MD 20857, 301–827–1223.

SUPPLEMENTARY INFORMATION: Under the PRA (44 U.S.C. 3501–3520), Federal agencies must obtain approval from the Office of Management and Budget (OMB) for each collection of information they conduct or sponsor. ''Collection of information'' is defined in 44 U.S.C. 3502(3) and 5 CFR 1320.3(c) and includes agency requests or requirements that members of the public submit reports, keep records, or provide information to a third party. Section 3506(c)(2)(A) of the PRA (44 U.S.C. 3506(c)(2)(A)) requires Federal agencies to provide a 60-day notice in the **Federal Register** concerning each proposed collection of information, including each proposed extension of an existing collection of information, before submitting the collection to OMB for approval. To comply with this requirement, FDA is publishing notice of the proposed collection of information set forth in this document.

With respect to the following collection of information, FDA invites comments on: (1) Whether the proposed collection of information is necessary for the proper performance of FDA's functions, including whether the information will have practical utility; (2) the accuracy of FDA's estimate of the burden of the proposed collection of information, including the validity of the methodology and assumptions used; (3) ways to enhance the quality, utility, and clarity of the information to be collected; and (4) ways to minimize the burden of the collection of information on respondents, including through the use of automated collection techniques, when appropriate, and other forms of information technology.

Administrative Detention and Banned Medical Devices—21 CFR 800.55(g), 800.55(k), 895.21, and 895.22 (OMB No. 0910–0114)—Extension

FDA has the statutory authority under section 304(g) of the Federal Food, Drug, and Cosmetic Act (the act) (21 U.S.C. 334(g)), to detain during establishment inspections devices that are believed to be adulterated or misbranded. On March 9, 1979, FDA issued a final regulation on administrative detention procedures, which includes, among other things, certain reporting requirements (§ 800.55(g) (21 CFR 800.55(g))) and recordkeeping requirements (§ 800.55(k)). Under § 800.55(g), an applicant of a detention order must show documentation of ownership if devices are detained at a place other than that of the appellant. Under § 800.55(k), the owner or other responsible person must supply records about how the devices may have become adulterated or misbranded, as well as records of distribution of the detained devices. These recordkeeping requirements for administrative detentions allow FDA to trace devices for which the detention period expired before a seizure is accomplished or injunctive relief is obtained.

FDA also has the statutory authority under section 516 of the act (21 U.S.C. 360f) to ban devices that present substantial deception or an unreasonable and substantial risk of illness or injury. The final regulation for banned devices contains certain reporting requirements (§§ 895.21(d) and 895.22(a) (21 CFR 895.21(d) and 895.22(a))). Section 895.21(d) states that if the Commissioner of Food and Drugs (the Commissioner) decides to initiate a proceeding to make a device a banned device, a notice of proposed rulemaking will be published in the **Federal Register**, and this notice will contain the finding that the device presents a substantial deception or an unreasonable and substantial risk of illness or injury. The notice will also contain the reasons why the proceeding was initiated, an evaluation of data and information obtained under other provisions of the act, any consultations with the panel, and a determination as to whether the device could be corrected by labeling or change of labeling, or change of advertising, and if that labeling or change of advertising has been made. Under § 895.21(d), any interested person may request an informal hearing and submit written comments. Under § 895.22, a manufacturer, distributor, or importer of a device may be required to submit to FDA all relevant and available data and information to enable the Commissioner to determine whether the device presents substantial deception, unreasonable and substantial risk of illness or injury, or unreasonable, direct, and substantial danger to the health of individuals.

Respondents to this collection of information are those manufacturers, distributors, or importers whose products FDA seeks to detain or ban.

FDA estimates the burden of this collection of information as follows:

TABLE 1.—ESTIMATED ANNUAL REPORTING BURDEN [1]

21 CFR Section	No. of Respondents	Annual Frequency per Response	Total Annual Responses	Hours per Response	Total Hours
800.55(g)	1	1	1	25	25
895.21(d) and 895.22(a) and (c)	26	1	26	16	416
TOTALS					441

[1] There are no capital costs or operating and maintenance costs associated with this collection of information.

TABLE 2.—ESTIMATED ANNUAL RECORDKEEPING BURDEN [1]

21 CFR Section	No. of Recordkeepers	Annual Frequency per Recordkeeping	Total Annual Records	Hours per Recordkeeper	Total Hours
800.55(k)	1	1	1	20	20

[1] There are no capital costs or operating and maintenance costs associated with this collection of information.

Over the past 3 years, there has been an average of one new administrative detention action per year. Each administrative detention will have varying amounts of data and information that must be maintained. Historically, FDA's Center for Devices and Radiological Health (CDRH) has had very few or no annual responses for this information collection and normally reports one response per year. CDRH is anticipating a banning action in Fiscal Year 2000 that will involve 26 firms.

Dated: March 24, 2000.

William K. Hubbard,

Senior Associate Commissioner for Policy, Planning, and Legislation.

[FR Doc. 00–7932 Filed 3–30–00; 8:45 am]

BILLING CODE 4160–01–F

DEPARTMENT OF HEALTH AND HUMAN SERVICES

Food and Drug Administration

[Docket No. 00N–1061]

Agency Information Collection Activities: Proposed Collection; Comment Request; Resource Assessment of Programs and Services in Food Safety

AGENCY: Food and Drug Administration, HHS.

ACTION: Notice.

SUMMARY: The Food and Drug Administration (FDA) is announcing an opportunity for public comment on the proposed collection of certain information by the agency. Under the Paperwork Reduction Act of 1995 (the PRA), Federal agencies are required to publish notice in the **Federal Register** concerning each proposed collection of information, and to allow 60 days for public comment in response to the notice. This notice solicits comments on a project supported by FDA to collect information on food safety programs and services and the resources devoted thereto by State and local agencies nationwide.

DATES: Submit written comments on the collection of information by May 30, 2000.

ADDRESSES: Submit written comments on the collection of information to the Dockets Management Branch (HFA–305), Food and Drug Administration, 5630 Fishers Lane, rm. 1061, Rockville, MD 20852. All comments should be identified with the docket number found in brackets in the heading of this document.

FOR FURTHER INFORMATION CONTACT: JonnaLynn P. Capezzuto, Office of Information Resources Management (HFA–250), Food and Drug Administration, 5600 Fishers Lane, Rockville, MD 20857, 301–827–4659.

SUPPLEMENTARY INFORMATION: Under the PRA (44 U.S.C. 3501–3520), Federal agencies must obtain approval from the Office of Management and Budget (OMB) for each collection of information they conduct or sponsor. ''Collection of information'' is defined in 44 U.S.C. 3502(3) and 5 CFR 1320.3(c) and includes agency requests or requirements that members of the public submit reports, keep records, or provide information to a third party. Section 3506(c)(2)(A) of the PRA (44 U.S.C. 3506(c)(2)(A)) requires Federal agencies to provide a 60-day notice in the **Federal Register** concerning each proposed collection of information, before submitting the collection to OMB for approval. To comply with this requirement, FDA is publishing notice of the proposed collection of information set forth in this document.

With respect to the following collection of information, FDA invites comments on: (1) Whether the proposed collection of information is necessary for the proper performance of FDA's functions, including whether the information will have practical utility; (2) the accuracy of FDA's estimate of the burden of the proposed collection of information, including the validity of the methodology and assumptions used; (3) ways to enhance the quality, utility, and clarity of the information to be collected; and (4) ways to minimize the burden of the collection of information on respondents, including through the use of automated collection techniques, when appropriate, and other forms of information technology.

Assessment of Local and State Resources in Food Safety Programs and Services

In 1998, FDA began an effort, in cooperation with local, State, and other Federal agencies, to develop an integrated national food safety system. The system would coordinate the activities and resources of all levels of government devoted to regulatory food safety programs to maximize the impact of available resources, reduce overlapping functions, coordinate responses to foodborne disease outbreaks, share information, improve communications and training, establish minimum national uniform standards and identify gaps in food safety controls for correction at any level of government. The effort is consistent with the ''farm to table'' approach and sound scientific and risk-based priorities called for by the National Academy of Science's Report of August 20, 1998, and the President's Council on Food Safety, established by Executive Order 13100 on August 25, 1998. A number of workgroups of local, State,

and Federal officials have been formed to address the integration effort including one on roles and responsibilities of Federal, State, and Local agencies.

The Roles and Responsibilities Work Group, consisting of local, State, and Federal officials as part of the National Food Safety System (NFSS), has recommended the preparation of a resource assessment survey to determine the capacity and needs of State and local government agencies involved in food safety. The information will be collected by a contractor, to be determined, using a resource assessment questionnaire developed by the Roles and Responsibilities Work Group. The information gathered by the survey will help to determine what capabilities can be coordinated in each State and nationally and where there are gaps or insufficiencies that need to be addressed. The questionnaire will be provided electronically to State and local agencies for automated responses to minimize the reporting burden. Mail or facsimile hard copies will only be used for those jurisdictions that do not have electronic response capability. The resulting information will be computerized for analysis and reporting.

The survey will include questions on laws and regulations in effect; staffing; information systems; funding sources, mechanisms and amounts; staff training, certification, and qualifications; consumer and industry education; emergency response systems; laboratory resources and capabilities; epidemiology resources; official establishment inventories; routine inspection frequencies; surveillance sampling; minimum performance standards; program scope; and types of assistance needed from State and/or Federal agencies.

The questionnaire is intended to be a one-time effort but may involve additional contacts with respondents to clarify information supplied or to encourage participation. Responses to this questionnaire are voluntary. It should be noted that the State and local members of the Roles and Responsibilities Work Group have strongly endorsed the need for this survey so that informed and balanced recommendations can be made to policymaking and funding officials.

Authority for providing such assistance is derived from section 311(a) of the Public Health Service Act (42 U.S.C. 243) and delegation of authority from the Public Health Service to the Commissioner of Food and Drugs relative to food protection is contained in 21 CFR 5.10(a)(2) and (a)(4). Assistance to local, State, and Federal agencies is also based on FDA's authorities and responsibilities under the Federal Food, Drug, and Cosmetic Act (21 U.S.C. 301). Under 31 U.S.C. 1535, FDA provides assistance to other Federal agencies.

There are approximately 4,200 local jurisdictions conducting food safety activities, about 150 State agencies, and an estimated 150 tribal agencies. More accurate counts will be available after the survey because one of the purposes will be to identify the local, State, and tribal agencies involved in food safety.

This will be a one-time survey with followup contacts to clarify responses or to elicit information from initial nonrespondents. Contact will be by electronic means whenever possible to minimize the burden on the respondent. Computerized data will be encouraged. FDA will likely contract with a third party to conduct the information gathering and compilation/analysis.

FDA estimates the burden of this collection of information as follows:

TABLE 1.—ESTIMATED ANNUAL REPORTING BURDEN [1]

No. of Respondents	Annual Frequency per Response	Total Annual Responses	Hours per Response	Total Hours
4,500	1	4,500	4	18,000

[1] There are no capital costs or operating and maintenance costs associated with this collection of information.

Dated: March 24, 2000.

William K. Hubbard,

Senior Associate Commissioner for Policy, Planning, and Legislation.

[FR Doc. 00–7934 Filed 3–30–00; 8:45 am]

BILLING CODE 4160–01–F

DEPARTMENT OF HEALTH AND HUMAN SERVICES

Food and Drug Administration

[Docket No. 99N–5222]

Agency Information Collection Activities; Submission for OMB Review; Comment Request; Notice of a Claim for GRAS Exemption Based on a GRAS Determination

AGENCY: Food and Drug Administration, HHS.

ACTION: Notice.

SUMMARY: The Food and Drug Administration (FDA) is announcing that the proposed collection of information listed below has been submitted to the Office of Management and Budget (OMB) for review and clearance under the Paperwork Reduction Act of 1995.

DATES: Submit written comments on the collection of information by May 1, 2000.

ADDRESSES: Submit written comments on the collection of information to the Office of Information and Regulatory Affairs, OMB, New Executive Office Bldg., 725 17th St. NW., rm. 10235, Washington, DC 20503, Attn: Wendy Taylor, Desk Officer for FDA.

FOR FURTHER INFORMATION CONTACT: Peggy Schlosburg, Office of Information Resources Management (HFA–250), Food and Drug Administration, 5600 Fishers Lane, Rockville, MD 20857, 301–827–1223.

SUPPLEMENTARY INFORMATION: In compliance with 44 U.S.C. 3507, FDA has submitted the following proposed collection of information to OMB for review and clearance.

Notice of a Claim for GRAS Exemption Based on a GRAS Determination (OMB No. 0910–0342—Extension)

Section 409 of the Federal Food, Drug, and Cosmetic Act (the act) (21 U.S.C. 348) establishes a premarket approval requirement for ''food additives;'' section 201(s) of that act (21 U.S.C. 321(s)) provides an exemption from the definition of ''food additive'' and thus from the premarket approval requirement, for uses of substances that are generally recognized as safe (GRAS) by qualified experts. FDA is proposing a voluntary procedure whereby members of the food industry who determine that use of a substance satisfies the statutory exemption may notify FDA of that determination. The notice would include a detailed summary of the data and information that support the GRAS determination, and the notifier would maintain a record of such data and information. FDA would make the information describing the GRAS claim, and the

agency's response to the notice, available in a publicly accessible file; the entire GRAS notice would be publicly available consistent with the Freedom of Information Act and other Federal disclosure statutes.

Description of Respondents: Manufacturers of Substances Used in Food and Feed.

In the **Federal Register** of December 17, 1999 (64 FR 70714 at 70715), the agency requested comments on the proposed collections of information. No significant comments were received.

FDA estimates the burden of this collection of information as follows:

TABLE 1.—ESTIMATED ANNUAL REPORTING BURDEN [1]

21 CFR Section	No. of Respondents	Annual Frequency per Response	Total Annual Responses	Hours per Response	Total Hours
170.36	50	1	50	150	7,500
570.36	10	1	10	150	1,500
Total					9,000

[1] There are no capital costs or operating and maintenance costs associated with this collection of information.

TABLE 2.—ESTIMATED ANNUAL RECORDKEEPING BURDEN [1]

21 CFR Section	No. of Recordkeepers	Annual Frequency of Recordkeeping	Total Annual Records	Hours per Recordkeeper	Total Hours
170.36(c)(1)(v)[2]	50	1	50	15	750
570.36(c)(1)(v)[2]	10	1	10	15	150
Total					900

[1] There are no capital costs or operating and maintenance costs associated with this collection of information.
[2] Due to a clerical error, the CFR cites that appeared in table 2 of the FEDERAL REGISTER of December 17, 1999 (64 FR 70714) were incorrect. Table 2 of this document contains the correct CFR cite.

The reporting requirement is for a proposed rule that has not yet been issued as a final rule. In developing the proposed rule, FDA solicited input from representatives of the food industry on the reporting requirements, but could not fully discuss with those representatives the details of the proposed notification procedure. FDA received no comments on the agency's estimate of the hourly reporting requirements, and thus has no basis to revise that estimate at this time. During 1998, FDA received 12 notices that were submitted under the terms of the proposed rule; between January 1, 1999, and November 30, 1999, FDA received 23 notices. To date, the number of annual notices is less than FDA's estimate; however, the number of annual notices could increase when the proposed rule becomes final.

Dated: March 24, 2000.

William K. Hubbard,

Senior Associate Commissioner for Policy, Planning, and Legislation.

[FR Doc. 00–7933 Filed 3–30–00; 8:45 am]

BILLING CODE 4160–01–F

DEPARTMENT OF HEALTH AND HUMAN SERVICES

Food and Drug Administration

[Docket Nos. 00M–1031 and 00M–1032]

Medical Devices Regulated by the Center for Biologics Evaluation and Research; List of Premarket Approval Actions

AGENCY: Food and Drug Administration, HHS.

ACTION: Notice.

SUMMARY: The Food and Drug Administration (FDA) is publishing a list of premarket approval application (PMA) approvals. This list is intended to inform the public of the existence and the availability of summaries of safety and effectiveness of approved PMA's through the Internet and the agency's Dockets Management Branch.

ADDRESSES: Summaries of safety and effectiveness are available on the Internet at http://www.fda.gov/cber/appr1999/1999approv.htm. Copies of summaries of safety and effectiveness are also available by submitting a written request to the Dockets Management Branch (HFA–305), Food and Drug Administration, 5630 Fishers Lane, rm. 1061, Rockville, MD 20852. Please cite the appropriate docket number as listed in table 1 in the **SUPPLEMENTARY INFORMATION** section of this document, when submitting a written request.

FOR FURTHER INFORMATION CONTACT: Nathaniel L. Geary, Center for Biologics Evaluation and Research (CBER) (HFM–17), Food and Drug Administration, 1401 Rockville Pike, Rockville, MD 20852–1448, 301–827–6210.

SUPPLEMENTARY INFORMATION: In the **Federal Register** of January 30, 1998 (63 FR 4571), FDA published a final rule to revise §§ 814.44(d) and 814.45(d) (21 CFR 814.44(d) and 814.45(d)) to discontinue publication of individual PMA approvals and denials in the **Federal Register**. Revised §§ 814.44(d) and 814.45(d) state that FDA will notify the public of PMA approvals and denials by posting them on FDA's home page on the Internet at http://www.fda.gov, by placing the summaries of safety and effectiveness on the Internet and in FDA's Dockets Management Branch, and by publishing in the **Federal Register** after each quarter a list of the PMA approvals announced in that quarter.

FDA believes that this procedure expedites public notification of these actions because announcements can be placed on the Internet more quickly than they can be published in the **Federal Register**, and FDA believes that the Internet is accessible to more people than the **Federal Register**.

In accordance with section 515(d)(3) of the Federal Food, Drug, and Cosmetic Act (the act) (21 U.S.C. 360e(d)(3)),

notification of an order approving, denying, or withdrawing approval of a PMA will continue to include a notice of opportunity to request review of the order under section 515(g) of the act. The 30-day period for requesting reconsideration of an FDA action under § 10.33(b) (21 CFR 10.33(b)) for notices announcing approval of a PMA begins on the day the notice is placed on the Internet. Section 10.33(b) provides that FDA may, for good cause, extend this 30-day period. Reconsideration of a denial or withdrawal of approval of a PMA may be sought only by the applicant: in these cases, the 30-day period will begin when the applicant is notified by FDA in writing of its decision.

The following is a list of the PMA applications reviewed within CBER, for which summaries of safety and effectiveness were placed on the Internet in accordance with the procedure as explained previously through September 30, 1999. There were no denial actions during this period. The list is in order by PMA number and provides the manufacturer's name, the generic name or trade name, and the approval date.

TABLE 1.—LIST OF APPROVAL PMA'S FROM JULY 2, 1999, THROUGH SEPTEMBER 30, 1999

PMA Number/Docket No.	Applicant	Trade Name	Approval Date
BP 97–0001/01/00M–1031	Nexell Therapeutics, Inc.	Isolex 300 Magnetic Cell Selection System and Isolex 300i Magnetic Cell Selection System	July 2, 1999
BP 97–0003/00M–1032	Dendreon Corp.	DACS™SC	July 23, 1999

Dated: March 23, 2000.

Margaret M. Dotzel,

Acting Associate Commissioner for Policy.

[FR Doc. 00–7935 Filed 3–30–00; 8:45 am]

BILLING CODE 4160–01–F

DEPARTMENT OF HEALTH AND HUMAN SERVICES

Health Resources and Services Administration

State Planning Grants

AGENCY: Health Resources and Services Administration.

ACTION: Notice of availability of funds.

SUMMARY: The Health Resources and Services Administration (HRSA) announces the availability of $15 million to support up to10 State grants for the development of plans to provide access to health insurance coverage for all State residents. This funding has been appropriated under the Fiscal Year (FY) 2000 HHS Appropriations Act.

In FY 2000, HRSA, through its State Planning Grants Program (SPG), will accept applications from States for fiscal year (FY 2000) grants to conduct a one year, in-depth analysis and related activities necessary to develop the most effective methods for providing access to affordable health insurance coverage to all its citizens. States will be expected to design approaches that provide affordable health insurance benefits similar in scope to the Federal Employees Health Benefit Plan, Medicaid, coverage offered to State employees or other similar quality benchmarks. Each State receiving such grants must submit the study and analysis results in the form of a report to the Secretary that identifies the characteristics of the uninsured within the State and proposals for providing them with access to health insurance coverage. Together, these reports will provide additional data about the characteristics of the uninsured generally and potential models for other States seeking to provide comprehensive coverage.

DATES: The time line for application submission, review, and award is follows:

April 10, 2000—Application kits (PHS 5161, OMB 0920–0528) and additional guidance will be available through the HRSA Grants Application Center (GAC). To receive a complete application kit, contact the GAC at 1–877–HRSA–123.

April 26 and 28, 2000—Two pre-application workshops are anticipated at Denver, CO (April 26, 2000) and Philadelphia, PA (April 28, 2000). For more information concerning these workshops, contact the State Planning Grant Program Office at 301–443–4619.

July 10, 2000—Applications due.

August 1–4, 2000—Applications reviewed.

September 30, 2000—Grant awards announced.

ADDRESSES: To receive a complete application kit (*i.e.,* application instructions, necessary forms, and application review criteria), contact the HRSA GAC at: HRSA, GAC, 1815 N. Fort Meyer Drive, Suite 300, Arlington, VA 22209, Phone: 1–877–HRSA–123, Fax: 1–877–HRSA–345, E-Mail: hrsagac@hrsa.gov

FOR FURTHER INFORMATION CONTACT: For further information contact Dr. Marcia Brand, Health Resources and Services Administration, Parklawn Building, Room 11–25, 5600 Fishers Lane, Rockville, MD 20857, Phone: (301) 443–4619, Fax: (301) 443–0643.

SUPPLEMENTARY INFORMATION: In 1998, 44.5 million people in the United States did not have health insurance. This is roughly one out of every six non-elderly Americans. Of these, 24.6 million were employed—18.7 million worked full time and 5.9 million worked part time. Nationally, over 11 million children (i.e., one in seven) are uninsured. Every year, approximately a million Americans lose their health coverage. A poll conducted for Health Coverage 2000 and released in October showed that seven out of ten Americans believe government must address the problem of the uninsured and state that they support $100 in new taxes to help provide additional health coverage. There is considerable public and private support for examining and implementing new models for providing access to affordable health coverage.

Many States have expressed interest in expanding coverage for the uninsured. Every State has responded to the opportunity provided by the State Children's Health Insurance Program (SCHIP) to design a program that provides health insurance coverage for uninsured low-income children. Many States have also expanded Medicaid coverage to uninsured children and adults, using existing options, such as section 1115 waiver authority, as well as increased flexibility under welfare reform to cover working parents. In addition, many States are assessing State policy in light of recent changes in Medicare. Some States are working towards enhancing coordination of publicly-funded health programs, such as health departments and community health centers. States have also undertaken activities that seek to expand insurance coverage through mechanisms other than Federally-

financed programs (*e.g.,* high risk pools and insurance market changes).

The private sector has expressed an interest in supporting States' efforts to expand coverage for the uninsured. The Robert Wood Johnson Foundation has implemented the State Coverage Initiatives (SCI), a major new technical assistance endeavor that will build on the successes and lessons learned in its earlier States Initiatives in Health Care Reform. The new program seeks to improve the practical capacity of State governments in their quest to decrease the number of uninsured Americans and has an emphasis on policy development and technical assistance. The SCI Program provides resources for technical assistance that States can use to analyze data, diagnose problems, identify solutions, and develop new strategies and policies. It offers small policy planning grants and for a few States, larger scale demonstration grants.

In January 2000, the Robert Wood Johnson Foundation, with the Health Insurance Association of America and Families USA, announced its Health Coverage 2000—Meeting the Challenge of the Uninsured initiative. Through this effort, eight of the nation's leading trade, professional and consumer organizations joined representatives of business, labor, physicians, nurses, hospitals, insurance companies and consumers to propose specific solutions for expanding access to health coverage. During this national conference, these organizations agreed that it is critically important for the health insurance industry to join with other organizations to find ways to promote health coverage for uninsured individuals. Of the eight proposals to expand health insurance coverage to low-income individuals developed at the conference, seven would expand Medicaid, SCHIP, or other government programs to increase coverage.

At the Federal level, the DHHS is committed to assisting States as they examine their options for expanding health insurance benefits. By providing State planning grants, the HRSA State Planning Grants Program intends to encourage States to provide access to affordable health insurance overage for all its citizens. Each grantee State will receive resources for necessary planning and a coordinated DHHS policy environment. Together, the results of each State's analysis of its uninsured population and its proposals for providing these individuals with access to health insurance coverage will provide additional data about the characteristics of the uninsured generally and present models for other States seeking to provide such comprehensive coverage.

SPG shares some of the same goals as and focus of the Robert Wood Johnson Foundation's State Coverage Initiatives and the Health Policy Studies Division of the National Governors' Association Center for Best Practices. Thus, whenever possible, SPG will coordinate its efforts with activities of these programs to share information about insurance trends, best practices, data and analyses, and technical assistance.

State Planning Grants

Program Purpose

The purpose of SPG is to have each grantee State develop a plan or propose options that would ensure every citizen in that State access to affordable health insurance benefits similar in scope to the Federal Employees Health Benefit Plan, Medicaid, benefits offered to State employees or other similar quality benchmarks. Not only will the grantee State benefit from its analysis, but by submitting a summary of this analysis and proposed plan at the end of the grant period in a report to the Secretary, other States may learn about successful or innovative ways to provide access to coverage. In addition, DHHS will have the opportunity to review these reports and gain insight into effective methods of supporting such endeavors.

Program Goal

The overarching SPG goal is to encourage States to provide access to health insurance coverage to all citizens by providing the resources needed to develop successful plans and to provide a number of data collection and planning strategies, along with viable insurance expansion options to consider. The immediate goal of SPG is to assist States as they collect and analyze data, develop coverage options or design programs that provide health insurance coverage to all uninsured citizens in the State through expanded State, Federal, and private partnerships.

Program Description

The $15 million in available funding has been appropriated under the FY 2000 Labor-HHS Appropriations Act. The HRSA, Office of the Administrator, State Planning Grants Program, will oversee the program. Up to 10 awards are anticipated and will vary in size, with a typical grant not to exceed $1.3 million. Preference will be given to States with lower rates of uninsured, unless the applicant shows a potential for a significant decrease in its uninsured population. Grant awards will reflect diverse State characteristics (*e.g.,* rural/frontier/urban areas and high/low penetration of managed care) and represent a variety of geographic areas of the country.

During FY 2000, SPG will support one-year planning grants to States to (1) collect and analyze data that describe the characteristics of their uninsured and assist in the design of approaches to provide access to affordable coverage, (2) design a program that would provide all uninsured with access to insurance benefits similar in care to State employee coverage, Federal Employees Health Benefit Plan, Medicaid or other similar quality benchmarks, through a State, Federal, and private partnership, (3) prepare a report to the Secretary describing these findings, and (4) by September 30, 2001, provide the report to the Secretary describing proposals for an expanded State, Federal, and private partnership to cover all of their uninsured.

The successful State applicant will have a demonstrated commitment to reducing its uninsured population; will demonstrate commitment by its Governor and Executive Branch to studying the possibilities for providing health insurance coverage to all uninsured; and will present a comprehensive proposal for the kinds of data to be collected, analysis of that data, use of the analyses to create an approach for covering all uninsured, and a strategy for implementing and funding that approach. The successful applicant will work with all appropriate health-related State agencies, including the Medicaid agency, the budget office, and other relevant departments (*e.g.,* insurance, public health, human services, mental health and substance abuse, and aging). If possible, the applicant should demonstrate communication with the health committees in the State legislature about the proposal. Formal collaboration must exist with private sector organizations (including both business and the health care provider communities), consumer groups, and researchers.

We are looking for applicants with a clear commitment to the goal of providing coverage to all uninsured and an operational plan for using these planning grants to help achieve that goal. As such, funded State planning grants will contain these common elements:

A goal of providing access to affordable health insurance coverage to all citizens in the State—Access to affordable coverage for this grant program means that individuals or families have the opportunity to purchase health insurance coverage or participate in a program that provides

adequate benefits at an affordable cost. States may ensure ''affordability'' by determining cost-sharing based on the beneficiary's income level and applying a sliding scale related to income, or implementing other cost-sharing protections such as spending caps. For example, in non-Medicaid SCHIP programs, for children in families with income levels above 150 percent of the Federal poverty line, cost-sharing may be imposed on a sliding scale related to income, but the total annual aggregate cost-sharing for all targeted low-income children in the family cannot exceed 5 percent of the family's annual income.

Citizens of the State—If Federal funds are proposed to be used, States should plan their coverage options based on existing Federal eligibility criteria for participation in the Medicaid, SCHIP, and Medicare programs. States may use State funds or other resources to cover non-citizen residents.

Commitment to eliminating the number of uninsured—Grantee States must demonstrate prior efforts, whether or not approved by their State Legislatures, to reduce their number of uninsured through program expansions, data collection activities to support further expansions and/or other activities demonstrating a commitment to providing increased access to health insurance.

Low rates of uninsured—Grantee States should have low rates of uninsured at the time of application submission or the potential for a significant decrease in their uninsured population.

Collaboration among State, Federal, and private partners—Grantee States should build upon current collaborations among State, Federal, and private partners for expanding health insurance coverage to all citizens within the State. States are encouraged to consult with Tribal governments, where appropriate. These collaborations should be formal and should include the leadership of public and private partners.

Capacity for data collection and analysis—Grantee States should demonstrate data collection and analytical capacity or a detailed plan for acquiring this technical assistance, including a commitment from the agency/organization to provide this technical assistance. States are encouraged to work with the many existing Federal and State data collection activities, as well as ongoing efforts in the private, non-profit sector.

Eligible Applicants

Eligibility is limited to States with only one application per State permitted. The Governor of each State is invited to apply. Each Governor is asked to designate an individual or agency responsible for preparing the State's grant application. A letter from the Governor authorizing this individual or agency to prepare the State's application should accompany the application.

Funding Criteria

Review criteria that will be used to evaluate applications includes:

Evidence that the State has a low rate of uninsured or a justification for its ability to significantly decrease a relatively high level of uninsured.

Evidence of commitment by the Governor, State agencies, and public and private health care providers to provide coverage to all uninsured.

Evidence of prior data collection and analysis resulting in efforts to expand coverage to the uninsured.

Evidence of meaningful collaboration between the agencies and constituencies in the public and private sectors necessary to successfully complete the analysis and submit the required report to the Secretary.

A demonstrated understanding of the technical capacity, resources, and collaboration necessary to successfully carry out the proposed analysis and provide the required report to the Secretary.

An accountable management and budget plan with time lines, demonstrating readiness of the State government to conduct the data collection, analyze the data, develop approaches to providing access to coverage, and determine strategies for implementing and funding such approaches. States should provide an explanation of how they will contract for needed technical assistance, if necessary.

Report Contents

This grant funding will assist States to develop models for providing access to health insurance coverage for all citizens of the State. As a result, each grantee State will prepare a report to the Secretary that provides:

A detailed plan for data collection and analysis, upon which the State will base its design for covering its uninsured.

Its strategy for gaining collaboration and consensus among State, Federal, and private partners on options to expand health insurance coverage to all citizens.

Options for expanding health insurance coverage through State, Federal, and private partnerships. For each option, the grantee State will describe how it proposes to address these issues: (1) targeting expansion groups such as parents of SCHIP children, young adults ages 19–20, and early retirees; (2) delivery systems; (3) administration; (4) outreach; (5) eligibility levels; (6) eligibility determination process; (7) enrollment process; (8) marketing plan; (9) coverage and benefits (similar to State, Federal employees, Medicaid, and other credible coverage); (10) portability; (11) cost-sharing (co-pays, premiums); (12) integration with existing public and private programs (*e.g.,* Medicaid, Medicare, and SCHIP coverage, State programs, projects proposed through the Community Access Program, *See* **Federal Register** notice, February 4, 2000); (13) plans for studying or avoiding crowd-out-interaction with employer-sponsored insurance; (14) cost-containment; (15) ensuring quality; (16) ensuring access; (17) data collection; (18) audits; (19) program budget; (20) program evaluations; (21) funding; (22) maintenance of effort; (23) necessary waivers (under existing program authority); (24) necessary State or Federal legislative changes (not under current authority); and (25) private sector options (*e.g.,* high risk pools, employer options, market reforms). States that propose or prepare waivers or State plan amendments (*e.g.,* Medicaid waivers, SCHIP amendments) as a result of their grant activities must submit their requests through existing review processes established by the Health Care Financing Administration.

Use of Grant Funds

Funding provided through this program may not be used to substitute for or duplicate funds currently supporting similar activities. In addition, grant funds may not be used to support construction, renovation or modernization costs. However, grant funds may support costs such as project staff salaries, consultants, project-related travel, project evaluation, limited equipment and software purchases or leases and coordinating project-related meetings.

Expected Results

The implementation of State Planning grants is expected to result in the development of a plan that the State might subsequently implement to provide health insurance coverage to all citizens of the State. In addition, the grantee States will provide information about data collection activities, partnerships, and options that other States may draw from in their efforts to expand health insurance coverage.

Dated: March 27, 2000.

Claude Earl Fox,

Administrator, Health Resources and Services Administration.

[FR Doc. 00–8039 Filed 3–30–00; 8:45 am]

BILLING CODE 4160–15–P

DEPARTMENT OF HOUSING AND URBAN DEVELOPMENT

[Docket No. FR–4565–N–10]

Notice of Proposed Information Collection: Comment Request; Housing Development Grant Program Project Settlement Procedures

AGENCY: Office of the Assistant Secretary for Housing, HUD.

ACTION: Notice.

SUMMARY: The proposed information collection requirement described below will be submitted to the Office of Management and Budget (OMB) for review, as required by the Paperwork Reduction Act. The Department is soliciting public comments on the subject proposal.

DATES: *Comments Due Date:* May 30, 2000.

ADDRESSES: Interested persons are invited to submit comments regarding this proposal. Comments should refer to the proposal by name and/or OMB Control Number and should be sent to: Wayne Eddins, Reports Management Officer, Department of Housing and Urban Development, 451 7th Street, SW, L'Enfant Building, Room 8202, Washington, D.C. 20410, telephone (202) 708–5221 (this is not a toll-free number) for copies of the proposed forms and other available information.

FOR FURTHER INFORMATION CONTACT: Willie Spearmon, Multifamily Housing, Office of Business Products, Department of Housing and Urban Development, 451 7th Street, SW., Washington, DC 20410, telephone (202) 708–3000, (this is not a toll free number) for copies of the proposed forms and other available information.

SUPPLEMENTARY INFORMATION: The Department is submitting the proposed information collection to OMB for review, as required by the Paperwork Reduction Act of 1995 (44 U.S.C. Chapter 35, as amended).

This Notice is soliciting comments from members of the public and affected agencies concerning the proposed collection of information to: (1) Evaluate whether the proposed collection of information is necessary for the proper performance of the functions of the agency, including whether the information will have practical utility; (2) Evaluate the accuracy of the agency's estimate of the burden of the proposed collection of information, (3) Enhance the quality, utility, and clarity of the information to be collected; and (4) Minimize the burden of the collection of information on those who are to respond; including the use of appropriate automated collection techniques or other forms of information technology, e.g., permitted electronic submission of responses.

This Notice also lists the following information:

Title of Proposal: Housing Development Grant Program Project Settlement Procedures.

OMB Control Number, if applicable: 2502–0382.

Description of the need for the information and proposed use: The collection of project settlement information is necessary to implement the program regulation at 24 CFR Part 850—Housing Development Grant. This section of the regulation requires, upon construction completion, that the program respondents account for funds expended. Such accounting is provided through the project settlement process.

Agency form numbers, if applicable: HUD–90024, HUD–90025, HUD–90026, HUD–90028, HUD–90028, HUD–90031.

Estimation of the total numbers of hours needed to prepare the information collection including number of respondents, frequency of response, and hours of response: The estimated number of respondents are 15, the frequency of responses is one, the annual responses are 15, the estimated burden for each form is HUD–90024 (.50 hours per response); HUD–90025 (6 hours per response); HUD–90026 (.50 hours per response); HUD–90027 (.50 hours per response); HUD–90028 (.50 hours per response); and HUD–90031 (8 hours per response); and the annual burden hours requested is 240 per application package.

Status of the proposed information collection: Reinstatement without change.

Authority: The Paperwork Reduction Act of 1995, 44 U.S.C., Chapter 35, as amended.

Dated: March 24, 2000.

William C. Apgar,

Assistant Secretary for Housing-Federal Housing Commissioner.

[FR Doc. 00–7947 Filed 3–30–00; 8:45 am]

BILLING CODE 4210–27–M

DEPARTMENT OF HOUSING AND URBAN DEVELOPMENT

[Docket No. FR–4566–N–03]

Notice of Submission of Proposed Information Collection to OMB; Emergency Comment Request Youthbuild Program

AGENCY: Officer of the Assistant Secretary for Community Planning and Development, HUD.

ACTION: Notice.

SUMMARY: The proposed information collection requirement described below has been submitted to the Office of Management and Budget (OMB) for emergency review and approval, as required by the Paperwork Reduction Act. The Department is soliciting public comments on the subject proposal.

DATES: *Comments Due Date:* April 7, 2000.

ADDRESSES: Interested persons are invited to submit comments regarding this proposal.Comments should refer to the proposal by name or OMB approval number (2506–0142) and should be sent to: Joseph F. Lackey, Jr., HUD Desk Officer, Officer of Management and Budget, New Executive Office Building, Washington, DC 20410 (202) 395–7316.

FOR FURTHER INFORMATION CONTACT: Wayne Eddins, Reports Management Officer, Department of Housing and Urban Development, 451 7th Street, SW, Washington, DC 20410; e-mail Wayne Eddins@HUD.gov; telephone (202) 708–2374. This is not a toll-free number. Copies of the proposed forms and other available documents submitted to OMB may be obtained from Mr. Eddins, 451 Seventh Street, SW, Washington, DC 20410, telephone (202) 708–5221. This is not a toll-free number. Copies of available documents submitted to OMB may be obtained from Mr. Eddins.

SUPPLEMENTARY INFORMATION: The Department is submitting the proposed information collection to OMB for review, as required by the Paperwork Reduction Act of 1995 (44 U.S.C. Chapter 35, as amended).

This Notice is soliciting comments from members of the public and affected agencies concerning the proposed collection of information to: (1) Evaluate whether the proposed collection of information is necessary for the proper performance of the functions of the agency, including whether the information will have practical utility; (2) Evaluate the accuracy of the agency's estimate of the burden of the proposed collection of information; (3) Enhance the quality, utility, and clarity of the

information to be collected; and (4) Minimize the burden of the collection of information on those who are to respond; including through the use of appropriate automated collection techniques or other forms of information technology, *e.g.,* permitting electronic submission of responses.

This Notice also lists the following information:

Title of Proposal: Youthbuild Program.

OMB Control Number, if applicable: 2506–0142.

Description of the need for the information and proposed use: Information collected from NOFA will be used by HUD to select grant awardees as required by the HUD Reform Act. Information collected from reports will be used to monitor and evaluate progress of grantees and programs.

Agency form numbers, if applicable: Youthbuild Application, HUD–40202, SF1199A, HUD–27054.

Members of affected public. Not-for-profit institutions, and state or local governments.

Estimation of the total numbers of hours needed to prepare the information collection including number of respondents, frequency of response, and hours of response:

Number of Respondents: 250.

Frequency of Reports: Semi-annually.

Hours of Response: Hours per response—45.

Status of the proposed information collection: reinstatement, with change, of a previously approved collection for which approval has expired.

Authority: The Paperwork Reduction Act of 1995, 44 U.S.C. Chapter 35, as amended.

Dated: March 27, 2000.

Wayne Eddins,

Reports Management Office Director, Office of the Chief Information Officer.

[FR Doc. 00–8031 Filed 3–30–00; 8:45 am]

BILLING CODE 4210–29–M

DEPARTMENT OF HOUSING AND URBAN DEVELOPMENT

[Docket No. FR–4561–N–16]

Notice of Submission of Proposed Information Collection to OMB; Public Housing Construction Report

AGENCY: Office of the Chief Information Officer, HUD.

ACTION: Notice.

SUMMARY: The proposed information collection requirement described below has been submitted to the Office of Management and Budget (OMB) for review, as required by the Paperwork Reduction Act. The Department is soliciting public comments on the subject proposal.

DATES: *Comments Due Date:* May 1, 2000.

ADDRESSES: Interested persons are invited to submit comments regarding this proposal. Comments should refer to the proposal by name and/or OMB approval number (2577–0027) and should be sent to: Joseph F. Lackey, Jr., OMB Desk Officer, Office of Management and Budget, Room 10235, New Executive Office Building, Washington, DC 20503.

FOR FURTHER INFORMATION CONTACT: Wayne Eddins, Reports Management Officer, Q, Department of Housing and Urban Development, 451 Seventh Street, Southwest, Washington, DC 20410, e-mail Wayne Eddins@HUD.gov; telephone (202) 708–2374. This is not a toll-free number. Copies of the proposed forms and other available documents submitted to OMB may be obtained from Mr. Eddins.

SUPPLEMENTARY INFORMATION: The Department has submitted the proposal for the collection of information, as described below to OMB for review, as required by the Paperwork Reduction Act (44 U.S.C. Chapter 35). The Notice lists the following information: (1) The title of the information collection proposal; (2) the office of the agency to collect the information; (3) the OMB approval number, if applicable; (4) the description of the need for the information and its proposed use; (5) the agency form number, if applicable; (6) what members of the public will be affected by the proposal; (7) how frequently information submissions will be required; (8) an estimate of the total number of hours needed to prepare the information submission including number of respondents, frequency of response, and hours of response; (9) whether the proposal is new, an extension, reinstatement, or revision of an information collection requirement; and (10) the name and telephone number of an agency official familiar with the proposal and of the OMB Desk Officer for the Department.

This Notice also lists the following information:

Title of Proposal: Public Housing Construction Report.

OMB Approval Number: 2577–0027.

Form Numbers: HUD–5378.

Description Of The Need For The Information and Its Proposed use: Public and Indian Housing are responsible for contract administration during project development and the hiring or architects or other persons licensed under the State law to assist and to advise them. Contract administration includes the submission of Form HUD–5378 to PHAs by the architects or other licensed persons so the PHA can monitor the status of construction.

Respondents: Business or other-for-profit, States, Local or Tribal Government.

Frequency of Submission: Recordkeeping.

Reporting Burden:

	Number of respondents	×	Frequency of Response	×	Hours per response	=	Burden hours
HUD–5378	158		2		.15		568

Total Estimated Burden Hours: 720.

Status: Reinstatement, without change.

Authority: Section 3507 of the Paperwork Reduction Act of 1995, 44 U.S.C. 35, as amended.

Dated: March 27, 2000.

Wayne Eddins,

Departmental Reports Management Officer, Office of the Chief Information Officer.

[FR Doc. 00–8033 3–30–00; 8:45 am]

BILLING CODE 4210–01–M

DEPARTMENT OF HOUSING AND URBAN DEVELOPMENT

[Docket No. FR–4561–N–17]

Notice of Submission of Proposed Information Collection to OMB; Secondary Market for Non-Conforming Loans to Low Wealth Borrowers

AGENCY: Office of the Chief Information Officer, HUD.

ACTION: Notice.

SUMMARY: The proposed information collection requirement described below has been submitted to the Office of Management and Budget (OMB) for review, as required by the Paperwork Reduction Act. The Department is soliciting public comments on the subject proposal.

DATES: *Comments Due Date:* May 1, 2000.

ADDRESSES: Interested persons are invited to submit comments regarding this proposal. Comments should refer to the proposal by name and/or OMB approval number (2502–0535) and should be sent to: Joseph F. Lackey, Jr., OMB Desk Officer, Office of Management and Budget, Room 10235, New Executive Office Building, Washington, DC 20503.

FOR FURTHER INFORMATION CONTACT: Wayne Eddins, Reports Management Officer, Q, Department of Housing and Urban Development, 451 Seventh Street, Southwest, Washington, DC 20410; e-mail Wayne Eddins@HUD.gov; telephone (202) 708–2374. This is not a toll-free number. Copies of the proposed forms and other available document submitted to OMB may be obtained from Mr. Eddins.

SUPPLEMENTARY INFORMATION: The Department has submitted the proposal for the collection of information, as described below, to OMB for review, as required by the Paperwork Reduction Act (44 U.S.C. chapter 35). The Notice lists the following information: (1) The title of the information collection proposal; (2) the office of the agency to collect the information; (3) the OMB approval number, if applicable; (4) the description of the need for the information and its proposed use; (5) the agency form number, if applicable; (6) what members of the public will be affected by the proposal; (7) how frequently information submissions will be required; (8) an estimate of the total number of hours needed to prepare the information submission including number of respondents, frequency of response, and hours of response; (9) whether the proposal is new, an extension, reinstatement, or revision of an information collection requirement; and (10) the name and telephone number of an agency official familiar with the proposal and of the OMB Desk Officer for the Department.

This Notice also lists the following information:

Title of Proposal: Secondary Market Non-Conforming Loans to Low Wealth Borrowers.

OMB Approval Number: 2502–0535.

Description of the Need For The Information and Its Proposed Use: To collect information from grantees (non-profits) to assess their ability to participate in demonstration program. Information will also be collected on a quarterly basis and at the conclusion of the demonstration to assess the outcome of the program.

Respondents: Not-for-profit.

Frequency of Submission: At application, quarterly, at conclusion of demonstration.

	Number of respondents	×	Frequency of response	×	Hours per response	=	Burden hours
Reporting Burden	36		4		18.3		825

Total Estimated Burden Hours: 825.

Status: Reinstatement, without change.

Authority: Section 3507 of the Paperwork Reduction Act of 1995. 44 U.S.C. 35, as amended.

Dated: March 27, 2000.

Wayne Eddins,

Departmental Reports Management Officer, Office of the Chief Information Officer.

[FR Doc. 00–8034 Filed 3–30–00; 8:45 am]

BILLING CODE 4210–01–M

DEPARTMENT OF HOUSING AND URBAN DEVELOPMENT

[Docket No. FR–4561–N–18]

Notice of Submission of Proposed Information Collection to OMB; Single Family Application for Insurance Benefits

AGENCY: Office of the Chief Information Officer, HUD.

ACTION: Notice.

SUMMARY: The proposed information collection requirement described below has been submitted to the Office of Management and Budget (OMB) for review, as required by the Paperwork Reduction Act. The Department is soliciting public comments on the subject proposal.

DATES: *Comments Due Date:* May 1, 2000.

ADDRESSES: Interested persons are invited to submit comments regarding this proposal. Comments should refer to the proposal by name and/or OMB approval number (2502–0429) and should be sent to: Joseph F. Lackey, Jr., OMB Desk Officer, Office of Management and Budget, Room 10235, New Executive Office Building, Washington, DC 20503.

FOR FURTHER INFORMATION CONTACT: Wayne Eddins, Reports Management Officer, Q, Department of Housing and Urban Development, 451 Seventh Street, Southwest, Washington, DC 20410; e-mail Wayne Eddins@HUD.gov; telephone (202) 708–2374. This is not a toll-free number. Copies of the proposed forms and other available documents submitted to OMB may be obtained from Mr. Eddins.

SUPPLEMENTARY INFORMATION: The Department has submitted the proposal for the collection of information, as described below, to OMB for review, as required by the Paperwork Reduction Act (44 U.S.C. Chapter 35). The Notice lists the following information: (1) The title of the information collection proposal; (2) the office of the agency to collect the information; (3) the OMB approval number, if applicable; (4) the description of the need for the information and its proposed use; (5) the agency form number, if applicable; (6) what members of the public will be affected by the proposal; (7) how frequently information submissions will be required; (8) an estimate of the total number of hours needed to prepare the information submission including number of respondents, frequency of response, and hours of response; (9) whether the proposal is new, an extension, reinstatement, or revision of an information collection requirement; and (10) the name and telephone number of an agency official familiar with the proposal and of the OMB Desk Officer for the Department.

This Notice also lists the following information:

Title of Proposal: Single Family Application for Insurance Benefits

OMB Approval Number: 2502–0429

Form Numbers: HUD–5378

Description of the Need for the Information and Its Proposed Use: Information collected from mortgages claiming insurance benefits on single family mortgages.

Respondents: Business or Other-for-.

Frequency of Submission: on occasion of a claim.

Reporting Burden:

	Number of respondents	×	Frequency of response	×	Hours per response	=	Burden hours
HUD–5378	8,000		11.25		1.33		119,700

Total Estimated Burden Hours: 119,700 hours

Status: Reinstatement, without change.

Authority: Section 3507 of the Paperwork Reduction Act of 1995, 44 U.S.C. 35, as amended.

Dated: March 27, 2000.

Wayne Eddins,

Departmental Reports Management Officer, Office of the Chief Information Officer.

[FR Doc. 00–8035 Filed 3–30–00; 8:45 am]

BILLING CODE 4210–01–M

DEPARTMENT OF HOUSING AND URBAN DEVELOPMENT

[Docket No. FR–4557–N–13]

Federal Property Suitable as Facilities To Assist the Homeless

AGENCY: Office of the Assistant Secretary for Community Planning and Development, HUD.

ACTION: Notice.

SUMMARY: This Notice identifies unutilized, underutilized, excess, and surplus Federal property reviewed by HUD for suitability for possible use to assist the homeless.

FOR FURTHER INFORMATION CONTACT: Clifford Taffet, room 7266, Department of Housing and Urban Development, 451 Seventh Street SW, Washington, DC 20410; telephone (202) 708–1234; TTY number for the hearing- and speech-impaired (202) 708–2565 (these telephone numbers are not toll-free), or call the toll-free Title V information line at 1–800–927–7588.

SUPPLEMENTARY INFORMATION: In accordance with 24 CFR part 581 and section 501 of the Stewart B, McKinney Homeless Assistance Act (42 U.S.C. 11411), as amended, HUD is publishing this Notice to identify Federal buildings and other real property that HUD has reviewed for suitability for use to assist the homeless. The properties were reviewed using information provided to HUD by Federal landholding agencies regarding unutilized and underutilized buildings and real property controlled by such agencies or by GSA regarding its inventory of excess or surplus Federal property. This Notice is also published in order to comply with the December 12, 1988 Court Order in *National Coalition for the Homeless* v. *Veterans Administration,* No. 88–2503–OG (D.D.C.).

Properties reviewed are listed in this Notice according to the following categories: Suitable/available, suitable/unavailable, suitable/to be excess, and unsuitable. The properties listed in the three suitable categories have been reviewed by the landholding agencies, and each agency has transmitted to HUD: (1) Its intention to make the property available for use to assist the homeless, (2) its intention to declare the property excess to the agency's needs, or (3) a statement of the reasons that the property cannot be declared excess or made available for use as facilities to assist the homeless.

Properties listed as suitable/available will be available exclusively for homeless use for a period of 60 days from the date of this Notice. Homeless assistance providers interested in any such property should send a written expression of interest to HHS, addressed to Brian Rooney, Division of Property Management, Program Support Center, HHS, room 5B–41, 5600 Fishers Lane, Rockville, MD 20857; (301) 443–2265. (This is not a toll-free number.) HHS will mail to the interested provider an application packet, which will include instructions for completing the application. In order to maximize the opportunity to utilize a suitable property, providers should submit their written expressions of interest as soon as possible. For complete details concerning the processing of applications, the reader is encouraged to refer to the interim rule governing this program, 24 CFR part 581.

For properties listed as suitable/to be excess, that property may, if subsequently accepted as excess by GSA, be made available for use by the homeless in accordance with applicable law, subject to screening for other Federal use. At the appropriate time, HUD will publish the property in a Notice showing it as either suitable/available or suitable/unavailable.

For properties listed as suitable/unavailable, the landholding agency has decided that the property cannot be declared excess or made available for use to assist the homeless, and the property will not be available.

Properties listed as unsuitable will not be made available for any other purpose for 20 days from the date of this Notice. Homeless assistance providers interested in a review by HUD of the determination of unsuitability should call the toll free information line at 1–800–927–7588 for detailed instructions or write a letter to Clifford Taffet at the address listed at the beginning of this Notice. Included in the request for review should be the property address (including zip code), the date of publication in the **Federal Register,** the landholding agency, and the property number.

For more information regarding particular properties identified in this Notice (*i.e.,* acreage, floor plan, existing sanitary facilities, exact street address), providers should contact the appropriate landholding agencies at the following addresses: ENERGY: Mr. Tom Knox, Department of Energy, Office of Contract and Resource Management, MA–53, Washington, DC 20585; (202) 586–8715; GSA: Mr. Brian K. Polly, Assistant Commissioner, General Services Administration, Office of Property Disposal, 18th and F Streets, NW, Washington, DC 20405; (202) 501–0052; NAVY: Mr. Charles C. Cocks, Department of the Navy, Director, Real Estate Policy Division, Naval Facilities Engineering Command, Washington Navy Yard, 1322 Patterson Ave., SE, Suite 1000, Washington, DC 20374–5065; (202) 685–9200; (These are not toll-free numbers).

Dated: March 23, 2000.

Fred Karnas, Jr.,

Deputy Assistant Secretary for Special Needs Assistance Programs.

TITLE V. FEDERAL SURPLUS PROPERTY PROGRAM FEDERAL REGISTER REPORT FOR 3/31/00

Suitable/Available Properties

Land (by State)

Idaho

25′ × 100′ Site
1520 N St. & 2290 E St.
Rogerson Co: Twin Falls ID 00000–
Landholding Agency: GSA
Property Number: 54200010007
Status: Unutilized
Comment: Lot too small to meet minimum size for residence, zoning/agriculture, no sewer service.
GSA Number: 9–A–ID–545.

Unsuitable Properties

Buildings (by State)

New Mexico

Bldg. 1, TA–8
Los Alamos National Lab
Los Alamos Co: NM 87545–
Landholding Agency: Energy
Property Number: 41200010029
Status: Unutilized
Reason: Secured Area.

Bldg. 2, TA–8
Los Alamos National Lab
Los Alamos Co: NM 87545–
Landholding Agency: Energy
Property Number: 41200010030
Status: Unutilized
Reasons: Secured Area; Extensive deterioration.

North Carolina

Bldg. TC–817
Camp Lejeune
Camp Lejeune Co: Onslow NC 28542–0004
Landholding Agency: Navy
Property Number: 77200010101
Status: Excess
Reason: Extensive deterioration.

Unsuitable Properties

Buildings (by State)

Washington

Whitney Point Complex
Brinnon Co: Jefferson WA 98320–9899
Landholding Agency: Navy
Property Number: 77200010102
Status: Excess
Reason: Extensive deterioration.

Land (by State)

Washington

Tract B–201
Geiger Heights Lagoon
Spokane Co: WA 99210–
Landholding Agency: GSA
Property Number: 18199930014
Status: Excess
Reason: Within 2000 ft. of flammable or explosive material
GSA Number: 9–D–WA–1180.

[FR Doc. 00–7657 Filed 3–30–00; 8:45 am]

BILLING CODE 4210–29–M

DEPARTMENT OF THE INTERIOR

Bureau of Indian Affairs

Proposed Agency Information Collection Activities; Comment Request

AGENCY: Bureau of Indian Affairs, Interior.

ACTION: Notice.

SUMMARY: This notice announces that the Information Collection Request for Documented Petitions for Federal Acknowledgment as an Indian Tribe will expire July 31, 2000. As required by the Paperwork Reduction Act of 1995, we are seeking comments on this information collection before we seek extension from the Office of Information and Regulatory Affairs, Office of Management and Budget.

DATES: Submit comments on or before May 30, 2000.

ADDRESSES: Send your written comments to R. Lee Fleming, Chief, Branch of Acknowledgment and Research, Bureau of Indian Affairs, 1849 C Street, NW, MS–4660 MIB, Washington, D.C. 20240. If you wish to submit comments by facsimile, the number is (202) 219–3008. You may submit comments electronically by contacting R. Lee Fleming at (202) 208–3592. Please mention OMB Number 1076–0104.

FOR FURTHER INFORMATION CONTACT: Requests for additional information or copies of the information or copies of the information collection submission should be directed to R. Lee Fleming, Chief, Branch of Acknowledgment and Research, Bureau of Indian Affairs, 1849 C Street, NW, MS–4660 MIB, Washington, D.C. 20240, or call (202) 208–3592.

All written comments will be available for public inspection in Room 4660 of the Main Interior Building, 1849 C Street, NW, Washington, D.C. from 9:00 a.m. until 3:00 p.m., Monday through Friday, excluding legal holidays.

SUPPLEMENTARY INFORMATION:

I. Abstract

The information collection is needed to establish whether a petitioning group has the characteristics necessary to be acknowledged as having a government-to-government relationship with the United States. Federal recognition makes the group eligible for benefits from the Federal government.

II. Method of Collection

The acknowledgment regulations at 25 CFR Part 83 contain seven criteria (§ 83.7) which unrecognized groups seeking Federal acknowledgment as Indian tribes must demonstrate that they meet. Information collected from petitioning groups under these regulations provide anthropological, genealogical and historical data used by the Assistant Secretary—Indian Affairs to establish whether a petitioning group has the characteristics necessary to be acknowledged as having a government-to-government relationship with the United States. Respondents are not required to retain copies of information submitted to the Bureau of Indian Affairs but will probably maintain copies for their own use. No periodic reports are required which would impose a record-keeping requirement.

III. Data

Title: Collection of Information for Federal Acknowledgment Under 25 CFR Part 83.

OMB Number: 1076–0104.

Expiration Date: July 31, 2000.

Type of Review: Extension of a currently approved collection.

Affected Entities: Groups petitioning for Federal acknowledgment as Indian tribes.

Estimated Number of Petitioners: 10.

Estimated Time per Petition: 2,075 hours.

Estimated Total Annual Burden Hours: 20,750.

Estimated Annual Costs: $830,000 (2,075 hours × $40.00 per hour).

IV. Request for Comments

You are invited to comment on:

(a) Whether the collection of information is necessary for the proper performance of the functions of the agency, including whether the information will have practical utility;

(b) The accuracy of the agency's estimate of the burden (including hours and cost) of the proposed collection of information, including the validity of the methodology and assumptions used;

(c) Ways to enhance the quality, utility, and clarity of the information to be collected; and

(d) Ways to minimize the burden of the collection of information on those who are to respond, including through the use of appropriate automated, electronic, mechanical, or other collection techniques or the forms of information technology.

Burden means the total time, effort, or financial resources expended by persons to generate, maintain, retain, or disclose or provide information to or for a Federal agency. This includes the time needed to review instructions; to develop, acquire, install and utilize technology and systems for the purpose of collecting, validating, and verifying information, processing and maintaining information, and disclosing and providing information; to train personnel and to be able to respond to a collection of information, to search data sources, to complete and review the collection of information; and to transmit or otherwise disclose the information.

Comments submitted in response to this notice will be summarized and/or included in the request for OMB approval of this information collection; they also will become a matter of public record. Individual respondents may request confidentiality. If you wish to

request that we consider withholding your name, street address, and other contact information (such as Internet address, FAX, or phone number) from public review or from disclosure under the Freedom of Information Act, you must state this prominently at the beginning of your comment. We will make available for public inspection in their entirety all submissions from organizations or businesses, and from individuals identifying themselves as representatives or officials of organizations or businesses.

An agency may not conduct or sponsor, and a person is not required to respond to, a collection of information unless it displays a currently valid OMB control number.

Dated: March 24, 2000.

Kevin Gover.

Assistant Secretary—Indian Affairs.

[FR Doc. 00–8042 Filed 3–30–00; 8:45 am]

BILLING CODE 4310–02–P

DEPARTMENT OF THE INTERIOR

Bureau of Indian Affairs

Proposed Finding for Federal Acknowledgment of the Paucatuck Eastern Pequot Indians of Connecticut

AGENCY: Bureau of Indian Affairs, Interior.

ACTION: Notice.

SUMMARY: Pursuant to 25 CFR 83.10(h), notice is hereby given that the Assistant Secretary—Indian Affairs proposes to determine that the Paucatuck Eastern Pequot Indians of Connecticut, c/o Ms. Agnes E. Cunha, P.O. Box 370, North Stonington, Connecticut 06359, exists as an Indian tribe within the meaning of Federal law. This notice is based on a determination that the historical Eastern Pequot tribe satisfies criteria 83(b) and 83.7(c) through 1973 and that the petitioner satisfies the remainder of the criteria set forth in 25 CFR 83.7 and, therefore, meets the requirements for a government-to-government relationship with the United States. A specific finding concerning whether one tribe or two tribes, as successors to the historical Eastern Pequot tribe, have occupied the reservation since 1973 will be made as part of the final determination, after receipt of comment on this proposed finding.

DATES: As provided by 25 CFR 83.10(i), any individual or organization wishing to challenge the proposed finding may submit factual or legal arguments and evidence to rebut the evidence relied upon. This material must be submitted within 180 calendar days from the date of publication of this notice. As stated in the regulations, 25 CFR 83.10(i), interested and informed parties who submit arguments and evidence to the Assistant Secretary must also provide copies of their submissions to the petitioner.

ADDRESSES: Comments on the proposed finding and/or requests for a copy of the report of the summary evaluation of the evidence should be addressed to the Office of the Assistant Secretary—Indian Affairs, 1849 C Street, N.W., Washington, D.C. 20240, Attention: Branch of Acknowledgment and Research. Mail Stop 4660–MIB.

FOR FURTHER INFORMATION CONTACT: R. Lee Fleming, Chief, Branch of Acknowledgment and Research, (202) 208–3592.

SUPPLEMENTARY INFORMATION: This notice is published in the exercise of authority delegated by the Secretary of the Interior to the Assistant Secretary—Indian Affairs by 209 DM 8.

Introduction

The Paucatuck Eastern Pequot Indians of Connecticut submitted a letter of intent to petition for Federal acknowledgment on June 20, 1989, and was assigned #113. Both the Paucatuck Eastern Pequot Indians of Connecticut and another petitioner, the Eastern Pequot Indians of Connecticut, assert descent and tribal continuity from the historical Eastern Pequot tribe. Both petitioners are derived from families which have been associated with the Lantern Hill reservation since the 19th century.

The Assistant Secretary—Indian Affairs (AS–IA) had placed the Eastern Pequot Indians of Connecticut (EP, #35) petition on active consideration January 1, 1998. After consideration and notification of #35 and other petitioners on the ''ready, waiting for active consideration'' list, the AS–IA on April 2, 1998, waived the priority provisions of 25 CFR § 83.10(d) in order to consider the petition of the Paucatuck Eastern Pequot Indians of Connecticut (Petitioner #113) simultaneously with the petition of the Eastern Pequot Indians of Connecticut (Petitioner #35). This waiver was made under the authority granted to the Secretary in 25 CFR § 1.2, and delegated to the Assistant Secretary in 290 DM 8.1, based on a finding that the waiver was in the best interest of the Indians.

This finding has been completed under the terms of the AS–IA's directive of February 7, 2000, published in the **Federal Register** on February 11, 2000 (65 FR 7052). Under the terms of the directive, this finding focuses on evaluating the specific conclusions and description of the group presented by the petitioner to show that it has met the seven mandatory criteria and maintained a tribal community up until the present. Because evaluation of this petition was begun under the previous internal procedures, this finding includes some analyses which go beyond evaluation of the specific positions of the petitioner. Consistent with the directive, draft technical reports, begun under previous internal procedures, were not finalized.

The evaluation of these petitions pertains to Indian groups which have had both continuous recognition by the State of Connecticut and continuous existence of a state reservation since the colonial period. These unique factors provide a defined thread of continuity through periods when other forms of documentation are sparse or do not pertain directly to a specific criterion. State recognition under these circumstances is more than the identification of an entity, because it reflects the existence of a tribe. The general body of evidence has been interpreted in the context of the tribe's relationship to the colony and state.

The Paucatuck Eastern Pequot and Eastern Pequot petitioners are the continuation of a historically state-recognized tribe whose relationship with the State of Connecticut goes back to the early 1600's, possessing a common reservation. Members of the tribe occupied a somewhat different status than non-Indians within Connecticut. This evidence provides a common backbone and consistent backdrop for interpreting the evidence of continued tribal existence. When weighed in combination with this historical and continuous existence, evidence on community and political influence carries greater weight that would be the case under circumstances where there was no evidence of a longstanding relationship with the state based on being a distinct community. The greater weight is assigned for the following reasons in combination:

The historical Eastern Pequot tribe has maintained a continuous historical government-to-government relationship with the State of Connecticut since colonial times;

The historical Eastern Pequot tribe had a state reservation established in colonial times, and has retained its land area under the protection and administration of the state to the present;

The historical Eastern Pequot tribe had members enumerated specifically as tribal members on the Federal Census,

Special Indian Population Schedules, for 1900 and 1910.

Past Federal acknowledgment decisions under 25 CFR Part 83 provide no precedents for dealing with a tribe which is presently state recognized with a state reservation and has been so continuously since early colonial times. The closest parallel is the Penobscot and Passmaquoddy Tribes of Maine. The Federal Government in the *Passmaquoddy* case stipulated to tribal existence, based on the historical state relationship (*Joint Tribal Council of the Passmaquoddy Tribe* v. *Morton* 528 F.2d 370 (1st Cir. 1975)). That precedent provides guidance in this matter. A different standard of tribal existence is not being applied here. Rather, the evidence, when weighed in the context of this continuous strong historical relationship, carries greater weight.

Evaluation Under the Criteria in 25 CFR 83.7

Criterion 83.7(a) requires that the petitioner have been identified as an American Indian entity on a substantially continuous basis since 1900. The majority of the external identifications specifically included the petitioner's direct or collateral ancestors as members of that entity. There were no external identifications of the entity as other than Indian or other than Eastern Pequot. From the 1970's through the present, almost no external identifications mentioned the existence of only one or the other of the two current petitioners. Almost every identification mentioned both and described them as rival groups within the context of the Lantern Hill reservation and the historical Eastern Pequot tribe.

In this case, identifications of the petitioner exist frequently and appear concurrently in multiple forms of evidence. Briefly, examples include Federal identifications on the Special Indian Population schedules of the 1900 and 1910 census, a 1934 Bureau of Indian Affairs report, and two reports in 1947 and 1948 published by the Government Printing Office; records generated by a continuous relationship with the State including overseer's reports, documents generated by the State Parks and Forests Commission, documents generated by the Office of the Commissioner of Welfare and Department of Environmental Protection, documents generated by the Connecticut Indian Affairs Council, and legislation pertaining to Connecticut's tribes; descriptions by anthropologists and other scholars; and numerous descriptive, feature-type newspaper articles from 1924 to the present. A significant example of identification of the Eastern Pequot was the June 9, 1933, order from the Superior Court of New London County, Connecticut, which defined the tribal membership and regulated residency on the Lantern Hill reservation (In re Ledyard Tribe 1933) (3/26/1938).

The combination of the various forms of evidence, taken in historical context, provides sufficient external identification of the Eastern Pequot as an American Indian entity from 1900 until the present, and of the petitioner as a group which has existed within that entity. Therefore, the petitioner meets criterion 83.7(a).

The evidence for 83.7(b) and 83.7(c) have been evaluated in the light of the essential requirement of the Federal acknowledgment regulations under 83.7 to show tribal continuity. Particular documents are evaluated by examination in the context of evidence of continuity of existence of community and political processes over time and descent from the historical tribe. For earlier historical periods, where the nature of the record limits the documentation, the continuity can be seen more clearly by looking at combined evidence than by attempting to discern whether an individual item provides the level of information to show that the petitioner meets a specific criterion at a certain date. Between first sustained contact and 1883 much of the specific evidence cited is evidence for both community and political influence. Under the regulations, evidence about historical political influence can be used as evidence to establish historical community (83.7(b)(1)(ix)) and vice versa (83.7(c)(1)(iv)). The evaluation is done in accord with the provision of the regulations provide that, ''Evaluation of petitions shall take into account historical situations and time periods for which evidence is demonstrably limited or not available. * * * Existence of community and political influence or authority shall be demonstrated on a substantially continuous basis, but this demonstration does not require meeting these criteria at every point in time.'' (83.6(e)).

This proposed finding and that being issued simultaneously for petitioner #35 conclude that both of the petitioners before the Department, the Paucatuck Eastern Pequot Indians of Connecticut (#113) and the Eastern Pequot Indians of Connecticut (#35), have evolved in recent times from the historical Eastern Pequot tribe which has existed continuously since first sustained contact with Europeans. Positive proposed findings to acknowledge both petitioners are therefore being issued. However, for the period from 1973 to the present, with regard to criteria 83.7(b) and 83.7(c), the Department finds that the petitioners and third parties have not provided sufficient information and analysis to enable the Department to determine that there is only one tribe with political factions.

The acknowledgment regulations provide that: ''A petitioner may be denied acknowledgment if the evidence available demonstrates that it does not meet one or more criteria. A petitioner may also be denied if there is insufficient evidence that it meets one or more of the criteria'' (83.6(d)). The reason that this provision of the regulations is not now resulting in two proposed negative findings is that the major question currently remaining to be decided does not pertain to the availability of evidence that the petitioners meet the criteria, but to the nature of the potentially acknowledgeable entity for the period from 1973 to the present. Following an evaluation of evidence and argument submitted during the comment period, the Department, as part of the final determination, will complete the analysis from 1973 to the present under criteria 83.7(b) and (c).

There is no serious dispute as to the existence of the historical Pequot tribe at the time of first contact, so the proposed finding has discussed and analyzed early colonial developments only insofar as they provide context for the development of the current petitioners. The division of the historical Pequot tribe into the modern Eastern and Western groups stemmed from the establishment of separate reservations, in close (less than two miles from one another) geographic proximity, during the later 17th century. There is no question that the Eastern Pequot, or Lantern Hill reservation, purchased by the Colony of Connecticut for the use of the Pequots under the leadership of Mamoho in 1683, has continued to exist under Connecticut state supervision and jurisdiction, and to be inhabited, until the present day.

Criterion 83.7(b) requires that a predominant portion of the petitioning community comprise a distinct community and have existed as a community from historical times until the present.

Records of colony actions and actions of other tribes from first contact through 1637 clearly identify a distinct Pequot tribal body, which occupied a defined territory acted in concert in opposing or making alliances with other tribes and the English through the end of the Pequot War. Under precedents for

evaluating tribes in early years of contact with Europeans, before substantial cultural and political changes had occurred (Narragansett PF 1982, 1; Mohegan PF 1989, 2; Miami PF 1990, 3–4, 7–8), this is sufficient evidence to demonstrate that 83.7(b) is met for the undifferentiated historical Pequot tribe as a whole, predecessor group to the later historical Eastern Pequot tribe, for the period prior to 1637.

From 1638 through 1654, the records of the United Colonies referred to the Pequots frequently and specifically referred to the Pequots assigned to the custody of the Eastern Niantic sachem Ninigret. The Commissioners of the United Colonies removed them from Ninigret as a body in 1654 and assigned Harmon Garret as governor over that body in 1655. After the death of Harmon Garret, colonial authorities appointed Momoho as his successor over a specific, named, group, ''Momohoe [sic] and the Pequots with him in those parts,'' which then undertook efforts to have a specific piece of land set aside for its use (Hurd 1882, 32; Wheeler 1887, 16; Trumbull 1859, 8n, 81–82 117n, 809). Under precedents for evaluating tribes in early years of contact with Europeans, before substantial cultural changes had occurred, even after tribes had become politically subject to colonial authorities, the material cited is sufficient evidence to show that criterion 83.7(b) is met.

From the establishment of the Lantern Hill reservation in 1685 to the end of the Civil War, the documents show a continuous reservation community, with a distinct land base. There was an essentially continuous population, allowing for normal processes of inmarriage, outmarriage, off-reservation work, and interaction with neighboring tribes.

Petitions in 1723 and 1749 reflected both the existence of an ongoing residential community of Eastern Pequot Indians on the Lantern Hill reservation and a broader community of off-reservation Eastern Pequot. Descriptions in 1749–1751 indicate specifically that the tribal affiliation of these individuals was recognized by the tribe itself. That off-reservation residency does not negate the existence of community has been established by precedent in prior findings (Narragansett PF 1982, 9; Gay Head PF 1985, 2).

Community in the late 18th and 19th centuries is shown by a variety of evidence. This included petitions from the group to the overseers, the consistency of membership in the tribe, descriptions of a distinct community at several points and other data which taken together show a distinct community which self-identified as Pequot. A portion of the group occupied the reservation continuously. Occupation of a distinct territory by a portion of a group provides evidence for community, even where it is not demonstrated that more than 50 percent of the total group resides thereon (Snoqualmie PF). By comparing a wide variety of documents, it does not appear that in the colonial and early Federal period the Eastern Pequot tribe, or its overseers, added to the membership lists any persons who were not qualified to be included and who were not accepted by the continuing tribal population. Documentation throughout this period contributes to a showing of community under 83.7(b)(1)(vii), ''The persistence of a named, collective Indian identity continuously over a period of more than 50 years, notwithstanding changes of name,'' whether they are called Momoho's band, or the Pequots at Stonington, or by other phrases.

From the end of the Civil War through the early 1880's, the overseers' reports were highly consistent in their listing of Eastern Pequot individuals associated with the Lantern Hill reservation. Consistency of membership by itself does not demonstrate community but provides supporting evidence when weighed together, as here, with other factors.

At a number of points from 1763 through 1883, the Eastern Pequot presented petitions to the state, indicating a coordinated group action. Because the community as a whole, throughout this period, had a residential focus on the reservation, and maintained a very high rate of intermarriage and patterned outmarriage, particularly with the Western Pequot and with the Narragansett, the Eastern Pequot tribe meets criterion 83.7(b) for the period through 1883.

Additional evidence for community until the 1930's is found in the overseers' reports, although these were not available for the years between 1891 and 1910. The overseers were knowledgeable observers of the group, because of their interaction with it. Allegations by petitioner #113 and the third parties that the overseers were not knowledgeable, or were corrupt, were not sustained by the body of data in the record. Although their reports provide few details, they are premised, particularly the identification of who was and who was not a member, on knowledge that a social group existed.

The Eastern Pequot tribe as a whole, including the ancestors of petitioner #113 as well as petitioner #35, meets the requirements of criterion 83.7(b) between 1883 and 1920. Important evidence for this is the kinship based social ties which derive from the substantial number of marriages in existence in this time period which linked the several family lines. Between 1880 and 1920 the Pequot family lines were linked together both by extant marriages and by ties from marriages in the preceding two generations. They formed a set of families linked by many different kinship ties. In addition, because marriages occurred between Eastern Pequot individuals who were not living in the same town, this provides evidence that social contact was being maintained, and was the basis for locating marriage partners. The documentation throughout the period from 1883 to the 1920's shows ''The persistence of a named, collective Indian identity continuously over a period of more than 50 years, notwithstanding changes of name'' evidence for community under 83.7(b)(1)(vii).

Supporting evidence to that based on kinship is the geographical concentration of much of the membership on or near the reservation at Lantern Hill. While not forming a distinct settlement, except for the small proportion living on the reservation, much of the membership was close enough that, consistent with past decisions, social interaction was easily possible. This geographical pattern thus supports more direct evidence of social ties.

The Eastern Pequot meet the requirements of criterion 83.7(b) for the time period between 1920 and 1940. There continued to be kinship based social ties which derived from the number of marriages in existence in this time period which linked the several family lines and from marriages in the previous generations. In this period also, that evidence is supplemented by the substantial number of marriages with neighboring tribes, particularly the Narragansett. These provide additional evidence that the group was part of the Indian society of the region.

Important additional evidence for community were the ''Fourth Sunday'' gatherings on the reservation. These were held regularly, and drew a substantial number of members, from different parts of the several family lines. They were both social and political gatherings, and were claimed as activities by both petitioners.

Supporting evidence to that based on kinship and the ''Fourth Sunday''

gatherings for this time period is that there continued to be a geographical concentration of much of the membership on or near the reservation at Lantern Hill. While not forming a distinct settlement, except for the small proportion living on the reservation, much of the membership was still close enough that, consistent with precedents of past decisions, social interaction was easily possible. This geographical pattern thus supports more direct evidence of social ties.

Additional evidence for community is found in the overseers' reports, which was useful evidence until 1936, when the overseer system ended, and to a lesser extent through the end of the 1930's, as the former overseer continued to act as agent for the State Park and Forests Commission. Although their reports provide few details, they are premised, particularly the identification of who was and who was not a member, on knowledge that a social group existed.

As evaluated under the standard articulated for a historical state recognized tribe, the petitioner meets criterion 83.7(b) from 1940 to 1973, based on the conclusion that there was a single community, including the Sebastians. Although there is evidence of divisions, there was not evidence to show whether and, if so, when, the historical tribe separated into two communities.

There is insufficient evidence in the record to enable the Department to determine that the petitioners formed a single tribe after 1973. The Department consequently makes no specific finding for the period 1973 to the present because there were not sufficient analysis and information provided by the petitioners or third parties to determine if there is only one tribe with political factions (see for example, *Paucatuck Eastern Pequot Indians of Connecticut et al.* v. *Connecticut Indian Affairs Council et al.* 555 A.2d 1003 (App. Ct. 1989), decided March 28, 1989, which describes each current petitioner as a ''faction of the tribe''). This question reflects in part the apparent recentness of the political alignments reflected in the petitioners after their formal organization in the early 1970's.

The historical Eastern Pequot tribe, which includes the petitioner as one of its component subgroups, meets criterion 83.7(b) through 1973. A specific finding concerning community from 1973 until the present will be presented in the final determination after receipt of comments from the petitioner and interested parties.

Criterion 83.7(c) requires that the petitioner has maintained political influence or authority over its members as an autonomous entity from historical times until the present.

Throughout its history, the context for administration of the Lantern Hill reservation has been set by the legislation passed by Connecticut and the administrative systems established by that legislation. The documents generated showed tribe's external relationship with the non-Indian administrative authorities, providing evidence that there was a political relationship between an Indian political entity and the non-Indian government, although they provided little information about internal political processes. These individual political documents have been interpreted in light of the general continuity of the reservation population as shown by a wide variety of other documents. The major specific evidence for political authority or influence between first sustained contact and 1883 is to be read together with the overall evidence of tribal existence and the discussion of the evidence for criterion 83.7(b).

The evidence submitted for the early contact period, 1620–1637, consisted primarily of historical narratives, written mainly by modern anthropologists based in part on colonial era documents which described dealings with the tribe by the colonial authorities and listed some leaders. Precedent does not required detailed information concerning the internal political processes of the historical tribes which were predecessors of New England petitioners in the early contact period (Narragansett PF 1982, 11; Gay Head PF 1987, 10; Mohegan PF 1989, 5). This material meets 83.7(c) for the undifferentiated historical Pequot tribe as a whole, predecessor group to the later historical Eastern Pequot tribe, for the period prior to 1637.

The evidence indicates that the modern Eastern Pequot evolved primarily from those Pequot subject neither to the Mohegan nor the Narragansett after the Pequot War, but rather those who were placed in charge of the Eastern Niantic. The precedents clearly indicate that the acknowledgment process allows for the historical combination and division of tribal subgroups and bands, and that temporary subjection to another Indian tribe does not result in a permanent cessation of tribal autonomy (Mohegan PF 1989, 26–27; Narragansett FD, 48 **Federal Register** 29 2/10/1983, 6177; Narragansett PF 1982, 2). The events of this period do not indicate that the petitioner fails to meet the ''autonomous entity'' requirement under 83.7(c).

Historical records and narratives indicate that for approximately 330 years, the predecessors of the Eastern Pequot tribe antecedent to the current petitioners were under supervision of non-Indian authorities, appointed Indian governors from 1655 to 1695 and under colony-appointed and state-appointed non-Indian overseers through much of the 18th through the 20th centuries. From its establishment in 1683 until 1989, the Eastern Pequot reservation was under the direct administration of Connecticut, first as a British colony and then, after the American Revolution, as a state. The AS-IA concluded in the Mohegan case that: ''[T]he autonomy requirement is solely concerned with autonomy from other Indian tribes, not non-Indian systems of government that were imposed on the Mohegan by the State of Connecticut.'' (Mohegan PF 1989, 26–27; for related precedents, see Narragansett PF 1982, 11; Narragansett PF 1982, 2; Gay Head PF, 4). The petitioners meet the ''autonomy'' requirement of 83.7(c) as long as the state was dealing with a group as a group which had named leaders or the evidence shows that the group was acting in concert and thus was exercising political influence internally.

Documents from the period through 1751 named the leaders with whom the colony of Connecticut was dealing and provided limited information concerning internal political processes identifying both a leader and the existence of a group actively defending its land base.

Precedents also indicate that the defense of a tribe's economic position is a significant indicator of political processes (Snoqualmie PF 1993, 25; Tunica-Biloxi PF 1980, 4). On the basis of precedent, this material is adequate to meet 83.7(c) during the colonial period.

After 1751, there is no evidence in Eastern Pequot petitions that any one individual held the position of sachem, or a comparable office. Precedent indicates no requirement under the regulations that such a formal office has been maintained (Mohegan PF 1989, 5), and the petitions from the tribe to the colony and stated indicate that the tribe did maintain some type of political structure capable of representing its wishes in dealing with colonial authorities. The appointment of overseers for the Eastern Pequot reservation by the colony of Connecticut in itself provides data about the continuous existence of the tribal entity, but no specific information about internal political leadership or

influence. However, the initiative of the Eastern Pequot Indians in requesting particular persons as overseers in 1763 and 1788, combined with the signatures on the petitions, indicates that the Indians on the Lantern Hill reservation at this time did have internal political processes and that they utilized the overseers appointed by the state to serve certain purposes which they themselves desired. On the basis of precedent, this material is adequate to meet 83.7(c) for a tribe during the second half of the 18th century.

The evidence of petitions from overseers for group purposes, together with accounts which identified ''principal men'' and a religious leader, in the context of a group with a distinct territory, is adequate to show that the petitioner meets criterion 83.7(c) for the period from 1800 to 1822.

Petitions from the group in 1839 and 1841, sought the appointment of a new overseer and objected to the actions of the existing one. The 1839 initiative of the Indians in requesting the replacement of an inadequate overseer indicated that the Indians themselves still, as in the later 18th century, expected the state-appointed overseers as agents to carry out their wishes in some matters. Of the four men who signed, two (Cyrus Shelly and Samuel Shuntaup) had been identified as ''principal men'' of the Eastern Pequot by Jedediah Morse nearly 20 years earlier. The regulations do not require that in order to demonstrate political process, a petition must be signed by the entire tribe. Petitions which show a portion of the tribe expressing an opinion or preference are also evidence of political process (Mohegan PF 1989, 6).

Petitions and lists generated by a proposed sale of reservation land are evidence indicating that from 1873 through 1883 the tribe was able to generate organized protests against a governmental initiative which they regarded as contrary to its economic interests, and to present documents to this effect to the non-Indian authorities. This evidence shows that the petitioner meets 83.7(c) for the period from 1873–1883.

There was no information in the record which specifically named or identified formal or informal leaders between 1883 and 1920 with the single exception of a 1913 obituary of Calvin Williams, a petition signer from the 1870's and early 1880's, who continued to serve as reservation preacher until his death in 1913. There is evidence from oral history and some records that he may have continued as tribal preacher, holding religious and social meetings on the reservation in the first decade of the 20th century. Under the regulations, evidence about community may be used as supporting evidence to demonstrate political processes, especially where a community is closely knit and distinct (see 83.7(c)(1)(iv)). Given the extensive intermarriage within the tribe and with neighboring tribes, the petitioner has strong evidence demonstrating community in this time period. The evidence is sufficient to demonstrate that criterion 83.7(c) is met between 1883 and 1920 as evaluated under the principle that it is entitled to greater weight because the petitioners are, singly and together, a continuously existing state-recognized tribe and with a continuous land base since colonial times.

The amount of data concerning political authority and influence in the record overall, including conflicts between the two groups, is considerably more extensive than that relating to internal political processes within petitioner #113 alone. As evaluated under the standard articulated for a historical state recognized tribe, the petitioner meets criterion 83.7(c) from 1883 to 1973, based on the conclusion that there was a single tribe, the entirety of whose actions reflected political influence, including the Gardners as one subgroup.

Because the two petitioners derive from a single historical tribe with a continuous state relationship since colonial times, the conflicts between the two, which have focused on their relationship with the State of Connecticut, are relevant evidence for political influence. However, it is unclear if the conflict is within one tribe, or between two. Both groups derive from the historical Eastern Pequot tribe which was recognized by the State of Connecticut. The State continues to recognize a successor to the historical Eastern Pequot tribe, but has not taken a position as to the present leaders of that successor. The petitioners and third parties have failed to provide adequate evidence and analysis to permit the Department to determine if the political processes since 1973 are those of factions of one tribe.

There are insufficient evidence and analysis in the record to enable the Department to determine that the petitioners formed a single tribe in this time period. The Department consequently makes no specific finding for the period 1973 to the present because there was not sufficient information to determine if there is only one tribe with political factions (see for example, *Paucatuck Eastern Pequot Indians of Connecticut et al.* v. *Connecticut Indian Affairs Council et al.* 555 A.2d 1003 (App. Ct. 1989), decided March 28, 1989, which describes each current petitioner as a ''faction of the tribe''). This question reflects in part the apparent recentness of the political alignments reflected in the petitioners after their formal organization in the early 1970's.

The historical Eastern Pequot tribe, which includes the petitioner as one of its component subgroups, meets criterion 83.7(c) through 1973. A specific finding concerning political influence from 1973 until the present will be presented in the final determination after receipt of comments from the petitioner and interested parties.

Criterion 83.7(d) requires that the petitioner provide copies of the group's current constitution and by-laws. The Paucatuck Eastern Pequot petitioner meets criterion 83.7(d).

Criterion 83.7(e) states that the petitioner's membership must consist of individuals who descend from a historical Indian tribe or from historical Indian tribes which combined and functioned as a single autonomous political entity. Extensive genealogical material submitted by the petitioner, by petitioner #35, and by the third parties indicates that the petitioner's current members are descendants of Marlboro and Eunice (Wheeler) Gardner and of Rachel (Hoxie) Jackson. As those individuals were, during their lives, members of the Eastern Pequot tribe as ascertained by evidence acceptable to the Secretary, the descendants of these individuals descend from the historical tribe.

The lines of descent for individual families have been verified through Federal census records from 1850 through 1920; public vital records of births, marriages, and deaths; and to a lesser extent through church records of baptisms, marriages, and burials, as well as through use of state records concerning the Lantern Hill reservation. These are the same types of records which have been used to verify descent for prior Federal acknowledgment decisions. Therefore, the petitioner meets criterion 83.7(e).

Criterion 83.7(f) states that the petitioner's membership must be composed principally of persons who are not members of any acknowledged North American Indian tribe. The Paucatuck Eastern Pequot petitioner meets criterion 83.7(f).

Criterion 83.7(g) states that neither the petitioner nor its members can have been the subject of congressional legislation that has expressly terminated

or forbidden the Federal relationship. The Paucatuck Eastern Pequot petitioner meets criterion 83.7(g).

Based on this preliminary factual determination, the Paucatuck Eastern Pequot Indians of Connecticut, should be granted Federal acknowledgment under 25 CFR Part 83.

This positive proposed finding for the Paucatuck Eastern Pequot and the positive proposed finding for the Eastern Pequot petitioner which is being issued simultaneously do not prevent the Department, in the final determination stage, from recognizing a combined entity, or both petitioners, or either one of the current petitioners but not the other, or neither of the current petitioners, depending upon the evidence and analysis developed during the comment periods by both petitioners and all interested and informed parties, as verified and evaluated by Bureau of Indian Affairs staff.

As provided by 25 CFR 83.10(h) of the regulations, a report summarizing the evidence, reasoning, and analyses that are the basis for the proposed decision will be provided to the petitioner and interested parties, and is available to other parties upon written request. Under the Assistant Secretary's directive, the technical report prepared in addition to this summary evaluation report of the evidence will not be completed but will remain in draft.

Comments on the proposed finding and/or requests for a copy of the report of evidence should be addressed to the Office of the Assistant Secretary—Indian Affairs, Bureau of Indian Affairs, 1849 C Street, N.W., Washington, D.C. 20240, Attention: Branch of Acknowledgment and Research, Mail Stop 4660–MIB. Comments on the proposed finding should be submitted within 180 calendar days from the date of publication of this notice. The period for comment on a proposed finding may be extended for up to an additional 180 days at the Assistant Secretary's discretion upon a finding of good cause (83.10(i)). Comments by interested and informed parties must be provided to the petitioner as well as to the Federal Government (83.10(h)). After the close of the 180-day comment period, and any extensions, the petitioner has 60 calendar days to respond to third-party comments (83.10(k)). This period may be extended at the Assistant Secretary's discretion if warranted by the extent and nature of the comments.

The proposed finding takes into consideration only materials from the petitioner and all interested parties submitted through April 5, 1999. Subsequent submissions have been held by the Bureau of Indian Affairs and will be considered during preparation of the final determination.

In addition to evidence and argument on the proposed findings in general, petitioners, interested parties and informed parties may submit comments as to the Secretary's authority, under the circumstances of recent separation of the two petitioners, to acknowledge two tribes or only one tribe which encompasses them both as the continuation of the historical tribe.

After the expiration of the comment and response periods described above, the Bureau of Indian Affairs will consult with the petitioner concerning establishment of a time frame for preparation of the final determination. After consideration of the written arguments and evidence rebutting the proposed finding and within 60 days after beginning preparation of the final determination, the Assistant Secretary—Indian Affairs will publish the final determination of the petitioner's status in the **Federal Register** as provided in 25 CFR 83.10(1).

Dated: March 24, 2000.

Kevin Gover,

Assistant Secretary—Indian Affairs.

[FR Doc. 00–8040 Filed 3–30–00; 8:45 am]

BILLING CODE 4310–02–P

DEPARTMENT OF THE INTERIOR

Bureau of Indian Affairs

Proposed Finding for Federal Acknowledgment of the Eastern Pequot Indians of Connecticut

AGENCY: Bureau of Indian Affairs, Interior.

ACTION: Notice.

SUMMARY: Pursuant to 25 CFR 83.10(h), notice is hereby given that the Assistant Secretary—Indian Affairs proposes to determine that the Eastern Pequot Indians of Connecticut, Holly Green Plaza Unit 2A East, 391 Norwich Westerly Road, PO Box 208, North Stonington, Connecticut 06359, c/o Ms. Mary E. Sebastian, exists as an Indian tribe within the meaning of Federal law. This notice is based on a determination that the historical Eastern Pequot tribe satisfies criteria 83(b) and 83.7(c) through 1973 and that the petitioner satisfies the remainder of the criteria set forth in 25 CFR 83.7 and, therefore, meets the requirements for a government-to-government relationship with the United States. A specific finding concerning whether one tribe or two tribes, as successors to the historical Eastern Pequot tribe, have occupied the reservation since 1973 will be made as part of the final determination, after receipt of comment on this proposed finding.

DATES: As provided by 25 CFR 83.10(i), any individual or organization wishing to challenge the proposed finding may submit factual or legal arguments and evidence to rebut the evidence relied upon. This material must be submitted within 180 calendar days from the date of publication of this notice. As stated in the regulations, 25 CFR 83.10(i), interested and informed parties who submit arguments and evidence to the Assistant Secretary must also provide copies of their submissions to the petitioner.

ADDRESSES: Comments on the proposed finding and/or requests for a copy of the report of the summary evaluation of the evidence should be addressed to the Office of the Assistant Secretary—Indian Affairs, 1849 C Street, N.W., Washington, D.C. 20240, Attention: Branch of Acknowledgment and Research. Mail Stop 4660–MIB.

FOR FURTHER INFORMATION CONTACT: R. Lee Fleming, Chief, Branch of Acknowledgment and Research, (202) 208–3592.

SUPPLEMENTARY INFORMATION: This notice is published in the exercise of authority delegated by the Secretary of the Interior to the Assistant Secretary—Indian Affairs by 209 DM 8.

Introduction

The Eastern Pequot Indians of Connecticut submitted a letter of intent to petition for Federal acknowledgment on June 28, 1978, and was assigned #35. Both the Eastern Pequot Indians of Connecticut and another petitioner, the Paucatuck Eastern Pequot Indians of Connecticut, assert descent and tribal continuity from the historical Eastern Pequot tribe. Both petitioners are derived from families which have been associated with the Lantern Hill reservation since the 19th century.

The Assistant Secretary—Indian Affairs (AS–IA) placed the Eastern Pequot Indians of Connecticut (EP, #35) petition on active consideration January 1, 1998. After consideration and notification of #35 and other petitioners on the ''ready, waiting for active consideration'' list, the AS–IA on April 2, 1998, waived the priority provisions of 25 CFR 83.10(d) in order to consider the petition of the Paucatuck Eastern Pequot Indians of Connecticut (Petitioner #113) simultaneously with the petition of the Eastern Pequot Indians of Connecticut (Petitioner #35). This waiver was made under the authority granted to the Secretary in 25 CFR 1.2, and delegated to the Assistant

Secretary in 290 DM 8.1, based on a finding that the waiver was in the best interest of the Indians.

This finding has been completed under the terms of the AS–IA's directive of February 7, 2000, published in the **Federal Register** on February 11, 2000 (65 FR 7052). Under the terms of the directive, this finding focuses on evaluating the specific conclusions and description of the group presented by the petitioner to show that it has met the seven mandatory criteria and maintained a tribal community up until the present. Because evaluation of this petition was begun under the previous internal procedures, this finding includes some analyses which go beyond evaluation of the specific positions of the petitioner. Consistent with the directive, draft technical reports, begun under previous internal procedures, were not finalized.

The evaluation of these petitions pertains to Indian groups which have had both continuous recognition by the State of Connecticut and continuous existence of a state reservation since the colonial period. These unique factors provide a defined thread of continuity through periods when other forms of documentation are sparse or do not pertain directly to a specific criterion. State recognition under these circumstances is more than the identification of an entity, because it reflects the existence of a tribe. The general body of evidence has been interpreted in the context of the tribe's relationship to the colony and state.

The Eastern Pequot and Paucatuck Eastern Pequot petitioners are the continuation of a historically state-recognized tribe whose relationship with the State of Connecticut goes back to the early 1600's, possessing a common reservation. Members of the tribe occupied a somewhat different status than non-Indians within Connecticut. This evidence provides a common backbone and consistent backdrop for interpreting the evidence of continued tribal existence. When weighed in combination with this historical and continuous existence, evidence on community and political influence carries greater weight that would be the case under circumstances where there was no evidence of a longstanding relationship with the state based on being a distinct community. The greater weight is assigned for the following reasons in combination:

The historical Eastern Pequot tribe has maintained a continuous historical government-to-government relationship with the State of Connecticut since colonial times;

The historical Eastern Pequot tribe had a state reservation established in colonial times, and has retained its land area under the protection and administration of the state to the present;

The historical Eastern Pequot tribe had members enumerated specifically as tribal members on the Federal Census, Special Indian Population Schedules, for 1900 and 1910.

Past Federal acknowledgment decisions under 25 CFR Part 83 provide no precedents for dealing with a tribe which is presently state recognized with a state reservation and has been so continuously since early colonial times. The closest parallel is the Penobscot and Passmaquoddy Tribes of Maine. The Federal Government in the *Passmaquoddy* case stipulated to tribal existence, based on the historical state relationship (*Joint Tribal Council of the Passmaquoddy Tribe* v. *Morton* 528 F.2d 370 (1st Cir. 1975)). That precedent provides guidance in this matter. A different standard of tribal existence is not being applied here. Rather, the evidence, when weighed in the context of this continuous strong historical relationship, carries greater weight.

Evaluation Under the Criteria in 25 CFR 83.7

Criterion 83.7(a) requires that the petitioner have been identified as an American Indian entity on a substantially continuous basis since 1900. The majority of the external identifications specifically included the petitioner's direct or collateral ancestors as members of that entity. There were no external identifications of the entity as other than Indian or other than Eastern Pequot. From the 1970's through the present, almost no external identifications mentioned the existence of only one or the other of the two current petitioners. Almost every identification mentioned both and described them as rival groups within the context of the Lantern Hill reservation and the historical Eastern Pequot tribe.

In this case, identifications of the petitioner exist frequently and appear concurrently in multiple forms of evidence. Briefly, examples include Federal identifications on the Special Indian Population schedules of the 1900 and 1910 census, a 1934 Bureau of Indian Affairs report, and two reports in 1947 and 1948 published by the Government Printing Office; records generated by a continuous relationship with the State including overseer's reports, documents generated by the State Parks and Forests Commission, documents generated by the Office of the Commissioner of Welfare and Department of Environmental Protection, documents generated by the Connecticut Indian Affairs Council, and legislation pertaining to Connecticut's tribes; descriptions by anthropologists and other scholars; and numerous descriptive, feature-type newspaper articles from 1924 to the present. A significant example of identification of the Eastern Pequot was the June 9, 1933, order from the Superior Court of New London County, Connecticut, which defined the tribal membership and regulated residency on the Lantern Hill reservation (In re Ledyard Tribe 1933) (3/26/1938).

The combination of the various forms of evidence, taken in historical context, provides sufficient external identification of the Eastern Pequot as an American Indian entity from 1900 until the present, and of the petitioner as a group which has existed within that entity. Therefore, the petitioner meets criterion 83.7(a).

The evidence for 83.7(b) and 83.7(c) have been evaluated in the light of the essential requirement of the Federal acknowledgment regulations under 83.7 to show tribal continuity. Particular documents are evaluated by examination in the context of evidence of continuity of existence of community and political processes over time and descent from the historical tribe. For earlier historical periods, where the nature of the record limits the documentation, the continuity can be seen more clearly by looking at combined evidence than by attempting to discern whether an individual item provides the level of information to show that the petitioner meets a specific criterion at a certain date. Between first sustained contact and 1883 much of the specific evidence cited is evidence for both community and political influence. Under the regulations, evidence about historical political influence can be used as evidence to establish historical community (83.7(b)(1)(ix)) and vice versa (83.7(c)(1)(iv)). The evaluation is done in accord with the provision of the regulations provide that, ''Evaluation of petitions shall take into account historical situations and time periods for which evidence is demonstrably limited or not available. * * * Existence of community and political influence or authority shall be demonstrated on a substantially continuous basis, but this demonstration does not require meeting these criteria at every point in time.'' (83.6(e)).

This proposed finding and that being issued simultaneously for petitioner #113 conclude that both of the

petitioners before the Department, the Eastern Pequot Indians of Connecticut (#35) and the Paucatuck Eastern Pequot Indians of Connecticut (#113), have evolved in recent times from the historical Eastern Pequot tribe which has existed continuously since first sustained contact with Europeans. Positive proposed findings to acknowledge both petitioners are therefore being issued. However, for the period from 1973 to the present, with regard to criteria 83.7(b) and 83.7(c), the Department finds that the petitioners and third parties have not provided sufficient information and analysis to enable the Department to determine that there is only one tribe with political factions.

The acknowledgment regulations provide that: ''A petitioner may be denied acknowledgment if the evidence available demonstrates that it does not meet one or more criteria. A petitioner may also be denied if there is insufficient evidence that it meets one or more of the criteria'' (83.6(d)). The reason that this provision of the regulations is not now resulting in two proposed negative findings is that the major question currently remaining to be decided does not pertain to the availability of evidence that the petitioners meet the criteria, but to the nature of the potentially acknowledgeable entity for the period from 1973 to the present. Following an evaluation of evidence and argument submitted during the comment period, the Department, as part of the final determination, will complete the analysis from 1973 to the present under criteria 83.7(b) and (c).

There is no serious dispute as to the existence of the historical Pequot tribe at the time of first contact, so the proposed finding has discussed and analyzed early colonial developments only insofar as they provide context for the development of the current petitioners. The division of the historical Pequot tribe into the modern Eastern and Western groups stemmed from the establishment of separate reservations, in close (less than two miles from one another) geographic proximity, during the later 17th century. There is no question that the Eastern Pequot, or Lantern Hill reservation, purchased by the Colony of Connecticut for the use of the Pequots under the leadership of Mamoho in 1683, has continued to exist under Connecticut state supervision and jurisdiction, and to be inhabited, until the present day.

Criterion 83.7(b) requires that a predominant portion of the petitioning community comprise a distinct community and have existed as a community from historical times until the present.

Records of colony actions and actions of other tribes from first contact through 1637 clearly identify a distinct Pequot tribal body, which occupied a defined territory acted in concert in opposing or making alliances with other tribes and the English through the end of the Pequot War. Under precedents for evaluating tribes in early years of contact with Europeans, before substantial cultural and political changes had occurred (Narragansett PF 1982, 1; Mohegan PF 1989, 2; Miami PF 1990, 3–4, 7–8), this is sufficient evidence to demonstrate that 83.7(b) is met for the undifferentiated historical Pequot tribe as a whole, predecessor group to the later historical Eastern Pequot tribe, for the period prior to 1637.

From 1638 through 1654, the records of the United Colonies referred to the Pequots frequently and specifically referred to the Pequots assigned to the custody of the Eastern Niantic sachem Ninigret. The Commissioners of the United Colonies removed them from Ninigret as a body in 1654 and assigned Harmon Garret as governor over that body in 1655. After the death of Harmon Garret, colonial authorities appointed Momoho as his successor over a specific, named, group, ''Momohoe [sic] and the Pequots with him in those parts,'' which then undertook efforts to have a specific piece of land set aside for its use (Hurd 1882, 32; Wheeler 1887, 16; Trumbull 1859, 8n, 81–82 117n, 809). Under precedents for evaluating tribes in early years of contact with Europeans, before substantial cultural changes had occurred, even after tribes had become politically subject to colonial authorities, the material cited is sufficient evidence to show that criterion 83.7(b) is met.

From the establishment of the Lantern Hill reservation in 1685 to the end of the Civil War, the documents show a continuous reservation community, with a distinct land base. There was an essentially continuous population, allowing for normal processes of inmarriage, out marriage, off-reservation work, and interaction with neighboring tribes.

Petitions in 1723 and 1749 reflected both the existence of an ongoing residential community of Eastern Pequot Indians on the Lantern Hill reservation and a broader community of off-reservation Eastern Pequot. Descriptions in 1749–1751 indicate specifically that the tribal affiliation of these individuals was recognized by the tribe itself. That off-reservation residency does not negate the existence of community has been established by precedent in prior findings (Narragansett PF 1982, 9; Gay Head PF 1985, 2).

Community in the late 18th and 19th centuries is shown by a variety of evidence. This included petitions from the group to the overseers, the consistency of membership in the tribe, descriptions of a distinct community at several points and other data which taken together show a distinct community which self-identified as Pequot. A portion of the group occupied the reservation continuously. Occupation of a distinct territory by a portion of a group provides evidence for community, even where it is not demonstrated that more than 50 percent of the total group resides thereon (Snoqualmie PF). By comparing a wide variety of documents, it does not appear that in the colonial and early Federal period the Eastern Pequot tribe, or its overseers, added to the membership lists any persons who were not qualified to be included and who were not accepted by the continuing tribal population. Documentation throughout this period contributes to a showing of community under 83.7(b)(1)(vii), ''The persistence of a named, collective Indian identity continuously over a period of more than 50 years, notwithstanding changes of name,'' whether they are called Momoho's band, or the Pequots at Stonington, or by other phrases.

From the end of the Civil War through the early 1880's, the overseers' reports were highly consistent in their listing of Eastern Pequot individuals associated with the Lantern Hill reservation. Consistency of membership by itself does not demonstrate community but provides supporting evidence when weighed together, as here, with other factors.

At a number of points from 1763 through 1883, the Eastern Pequot presented petitions to the state, indicating a coordinated group action. Because the community as a whole, throughout this period, had a residential focus on the reservation, and maintained a very high rate of intermarriage and patterned out marriage, particularly with the Western Pequot and with the Narragansett, the Eastern Pequot tribe meets criterion 83.7(b) for the period through 1883.

Additional evidence for community until the 1930's is found in the overseers' reports, although these were not available for the years between 1891 and 1910. The overseers were knowledgeable observers of the group, because of their interaction with it.

Allegations by petitioner #113 and the third parties that the overseers were not knowledgeable, or were corrupt, were not sustained by the body of data in the record. Although their reports provide few details, they are premised, particularly the identification of who was and who was not a member, on knowledge that a social group existed.

The Eastern Pequot tribe as a whole, including the ancestors of petitioner #113 as well as petitioner #35, meets the requirements of criterion 83.7(b) between 1883 and 1920. Important evidence for this is the kinship based social ties which derive from the substantial number of marriages in existence in this time period which linked the several family lines. Between 1880 and 1920 the Pequot family lines were linked together both by extant marriages and by ties from marriages in the preceding two generations. They formed a set of families linked by many different kinship ties. In addition, because marriages occurred between Eastern Pequot individuals who were not living in the same town, this provides evidence that social contact was being maintained, and was the basis for locating marriage partners. The documentation throughout the period from 1883 to the 1920's shows ''The persistence of a named, collective Indian identity continuously over a period of more than 50 years, notwithstanding changes of name'' evidence for community under 83.7(b)(1)(vii).

Supporting evidence to that based on kinship is the geographical concentration of much of the membership on or near the reservation at Lantern Hill. While not forming a distinct settlement, except for the small proportion living on the reservation, much of the membership was close enough that, consistent with past decisions, social interaction was easily possible. This geographical pattern thus supports more direct evidence of social ties.

The Eastern Pequot meet the requirements of criterion 83.7(b) for the time period between 1920 and 1940. There continued to be kinship based social ties which derived from the number of marriages in existence in this time period which linked the several family lines and from marriages in the previous generations. In this period also, that evidence is supplemented by the substantial number of marriages with neighboring tribes, particularly the Narragansett. These provide additional evidence that the group was part of the Indian society of the region.

Important additional evidence for community were the ''Fourth Sunday'' gatherings on the reservation. These were held regularly, and drew a substantial number of members, from different parts of the several family lines. They were both social and political gatherings, and were claimed as activities by both petitioners.

Supporting evidence to that based on kinship and the ''Fourth Sunday'' gatherings for this time period is that there continued to be a geographical concentration of much of the membership on or near the reservation at Lantern Hill. While not forming a distinct settlement, except for the small proportion living on the reservation, much of the membership was still close enough that, consistent with precedents of past decisions, social interaction was easily possible. This geographical pattern thus supports more direct evidence of social ties.

Additional evidence for community is found in the overseers' reports, which was useful evidence until 1936, when the overseer system ended, and to a lesser extent through the end of the 1930's, as the former overseer continued to act as agent for the State Park and Forests Commission. Although their reports provide few details, they are premised, particularly the identification of who was and who was not a member, on knowledge that a social group existed.

As evaluated under the standard articulated for a historical state recognized tribe, the petitioner meets criterion 83.7(b) from 1940 to 1973, based on the conclusion that there was a single community, including the Sebastians. Although there is evidence of divisions, there was not evidence to show whether and, if so, when, the historical tribe separated into two communities.

There is insufficient evidence in the record to enable the Department to determine that the petitioners formed a single tribe after 1973. The Department consequently makes no specific finding for the period 1973 to the present because there was not sufficient analysis and information provided by the petitioners or third parties to determine if there is only one tribe with political factions (see for example, *Paucatuck Eastern Pequot Indians of Connecticut et al.* v. *Connecticut Indian Affairs Council et al.* 555 A.2d 1003 (App. Ct. 1989), decided March 28, 1989, which describes each current petitioner as a ''faction of the tribe''). This question reflects in part the apparent recentness of the political alignments reflected in the petitioners after their formal organization in the early 1970's.

The historical Eastern Pequot tribe, which includes the petitioner as one of its component subgroups, meets criterion 83.7(b) through 1973. A specific finding concerning community from 1973 until the present will be presented in the final determination after receipt of comments from the petitioner and interested parties.

Criterion 83.7(c) requires that the petitioner has maintained political influence or authority over its members as an autonomous entity from historical times until the present.

Throughout its history, the context for administration of the Lantern Hill reservation has been set by the legislation passed by Connecticut and the administrative systems established by that legislation. The documents generated showed tribe's external relationships with the non-Indian administrative authorities, providing evidence that there was a political relationship between an Indian political entity and the non-Indian government, although they provided little information about internal political processes. These individual political documents have been interpreted in light of the general continuity of the reservation population as shown by a wide variety of other documents. The major specific evidence for political authority or influence between first sustained contact and 1883 is to be read together with the overall evidence of tribal existence and the discussion of the evidence for criterion 83.7(b).

The evidence submitted for the early contact period, 1620–1637, consisted primarily of historical narratives, written mainly by modern anthropologists based in part on colonial era documents which described dealings with the tribe by the colonial authorities and listed some leaders. Precedent does not required detailed information concerning the internal political processes of the historical tribes which were predecessors of New England petitioners in the early contact period (Narragansett PF 1982, 11; Gay Head PF 1987, 10; Mohegan PF 1989, 5). This material meets 83.7(c) for the undifferentiated historical Pequot tribe as a whole, predecessor group to the later historical eastern Pequot tribe, for the period prior to 1637.

The evidence indicates that the modern Eastern Pequot evolved primarily from those Pequot subject neither to the Mohegan nor the Narragansett after the Pequot War, but rather those who were placed in charge of the Eastern Niantic. The precedents clearly indicate that the acknowledgment process allows for the historical combination and division of tribal subgroups and bands, and that temporary subjection to another Indian

tribe does not result in a permanent cessation of tribal autonomy (Mohegan PF 1989, 26–27; Narragansett FD, 48 **Federal Register** 29 2/10/1983, 6177; Narragansett PF 1982, 2). The events of this period do not indicate that the petitioner fails to meet the ''autonomous entity'' requirement under 83.7(c).

Historical records and narratives indicate that for approximately 330 years, the predecessors of the Eastern Pequot tribe antecedent to the current petitioners were under supervision of non-Indian authorities, appointed Indian governors from 1655 to 1695 and under colony-appointed and state-appointed non-Indian overseers through much of the 18th through the 20th centuries. From its establishment in 1683 until 1989, the Eastern Pequot reservation was under the direct administration of Connecticut, first as a British colony and then, after the American Revolution, as a state. The AS–IA concluded in the Mohegan case that: ''[T]he autonomy requirement is solely concerned with autonomy from other Indian tribes, not non-Indian systems of government that were imposed on the Mohegan by the State of Connecticut.'' (Mohegan PF 1989, 26–27; for related precedents, see Narragansett PF 1982, 11; Narragansett PF 1982, 2; Gay Head PF, 4). The petitioners meet the ''autonomy'' requirement of 83.7(c) as long as the state was dealing with a group as a group which had named leaders or the evidence shows that the group was acting in concert and thus was exercising political influence internally.

Documents from the period through 1751 named the leaders with whom the colony of Connecticut was dealing and provided limited information concerning internal political processes identifying both a leader and the existence of a group actively defending its land base.

Precedents also indicate that the defense of a tribe's economic position is a significant indicator of political processes (Snoqualmie PF 1993, 25; Tunica-Biloxi PF 1980, 4). On the basis of precedent, this material is adequate to meet 83.7(c) during the colonial period.

After 1751, there is no evidence in Eastern Pequot petitions that any one individual held the position of sachem, or a comparable office. Precedent indicates no requirement under the regulations that such a formal office have been maintained (Mohegan PF 1989, 5), and the petitions from the tribe to the colony and stated indicate that the tribe did maintain some type of political structure capable of representing its wishes in dealing with colonial authorities. The appointment of overseers for the Eastern Pequot reservation by the colony of Connecticut in itself provides data about the continuous existence of the tribal entity, but no specific information about internal political leadership or influence. However, the initiative of the Eastern Pequot Indians in requesting particular persons as overseers in 1763 and 1788, combined with the signatures on the petitions, indicates that the Indians on the Lantern Hill reservation at this time did have internal political processes and that they utilized the overseers appointed by the state to serve certain purposes which they themselves desired. On the basis of precedent, this material is adequate to meet 83.7(c) for a tribe during the second half of the 18th century.

The evidence of petitions from overseers for group purposes, together with accounts which identified ''principal men'' and a religious leader, in the context of a group with a distinct territory, is adequate to show that the petitioner meets criterion 83.7(c) for the period from 1800 to 1822.

Petitions from the group in 1839 and 1841, sought the appointment of a new overseer and objected to the actions of the existing one. The 1839 initiative of the Indians in requesting the replacement of an inadequate overseer indicated that the Indians themselves still, as in the later 18th century, expected the state-appointed overseers as agents to carry out their wishes in some matters. Of the four men who signed, two (Cyrus Shelly and Samuel Shuntaup) had been identified as ''principal men'' of the Eastern Pequot by Jedediah Morse nearly 20 years earlier. The regulations do not require that in order to demonstrate political process, a petition must be signed by the entire tribe. Petitions which show a portion of the tribe expressing an opinion or preference are also evidence of political process (Mohegan PF 1989, 6).

Petitions and lists generated by a proposed sale of reservation land are evidence indicating that from 1873 through 1883 the tribe was able to generate organized protests against a governmental initiative which they regarded as contrary to its economic interests, and to present documents to this effect to the non-Indian authorities. This evidence shows that the petitioner meets 83.7(c) for the period from 1873–1883.

There was no information in the record which specifically named or identified formal or informal leaders between 1883 and 1920 with the single exception of a 1913 obituary of Calvin Williams, a petition signer from the 1870's and early 1880's, who continued to serve as reservation preacher until his death in 1913. There is evidence from oral history and some records that he may have continued as tribal preacher, holding religious and social meetings on the reservation in the first decade of the 20th century. Under the regulations, evidence about community may be used as supporting evidence to demonstrate political processes, especially where a community is closely knit and distinct (see 83.7(c)(1)(iv)). Given the extensive intermarriage within the tribe and with neighboring tribes, the petitioner has strong evidence demonstrating community in this time period. The evidence is sufficient to demonstrate that criterion 83.7(c) is met between 1883 and 1920 as evaluated under the principle that it is entitled to greater weight because the petitioners are, singly and together, a continuously existing state-recognized tribe and with a continuous land base since colonial times.

The amount of data concerning political authority and influence in the record overall, including conflicts between the two groups, is considerably more extensive than that relating to internal political processes within petitioner #35 alone. As evaluated under the standard articulated for a historical state recognized tribe, the petitioner meets criterion 83.7(c) from 1883 to 1973, based on the conclusion that there was a single tribe, the entirety of whose actions reflected political influence, including the Sebastians as one subgroup, rather than as the entire entity evaluated.

Because the two petitioners derive from a single historical tribe with a continuous state relationship since colonial times, the conflicts between the two, which have focused on their relationship with the State of Connecticut, are relevant evidence for political influence. However, it is unclear if the conflict is within one tribe, or between two. Both groups derive from the historical Eastern Pequot tribe which was recognized by the State of Connecticut. The State continues to recognize a successor to the historical Eastern Pequot tribe, but has not taken a position as to the present leaders of that successor. The petitioners and third parties have failed to provide adequate evidence and analysis to permit the Department to determine if the political processes since 1973 are those of factions of one tribe.

There is insufficient evidence and analysis in the record to enable the Department to determine that the petitioners formed a single tribe in this

time period. The Department consequently makes no specific finding for the period 1973 to the present because there was not sufficient information to determine that there is only one tribe with political factions (see for example, *Paucatuck Eastern Pequot Indians of Connecticut et al.* v. *Connecticut Indian Affairs Council et al.* 555 A.2d 1003 (App. Ct. 1989), decided March 28, 1989, which describes each current petitioner as a ''faction of the tribe''). This question reflects in part the apparent recentness of the political alignments reflected in the petitioners after their formal organization in the early 1970's.

The historical Eastern Pequot tribe, which includes the petitioner as one of its component subgroups, meets criterion 83.7(c) through 1973. A specific finding concerning political influence from 1973 until the present will be presented in the final determination after receipt of comments from the petitioner and interested parties.

Criterion 83.7(d) requires that the petitioner provide copies of the group's current constitution and bylaws. The Eastern Pequot meets criterion 83.7(d).

Criterion 83.7(e) states that the petitioner's membership must consist of individuals who descend from a historical Indian tribe or from historical Indian tribes which combined and functioned as a single autonomous political entity. Extensive genealogical material submitted by the petitioner, by petitioner #113, and by the third parties indicates that the petitioner's current members are descendants of Tamar (Brushell) Sebastian and of Laura (Fagins) Watson. As those individuals were, during their lives, members of the Eastern Pequot tribe as ascertained by evidence acceptable to the Secretary, the descendants of these individuals, as well as the descendants of any descendants of Abby (Fagins) Randall now included on the petitioner's membership list, descend from the historical tribe.

The lines of descent for individual families have been verified through Federal census records from 1850 through 1920; public vital records of births, marriages, and deaths; and to a lesser extent through church records of baptisms, marriages, and burials, as well as through use of state records concerning the Lantern Hill reservation. These are the same types of records which have been used to verify descent for prior Federal acknowledgment decisions. Therefore, the petitioner meets criterion 83.7(e).

Criterion 83.7(f) states that the petitioner's membership must be composed principally of persons who are not members of any acknowledged North American Indian tribe. The Eastern Pequot meets criterion 83.7(f).

Criterion 83.7(g) states that neither the petitioner nor its members can have been the subject of congressional legislation that has expressly terminated or forbidden the Federal relationship. The Eastern Pequot meets criterion 83.7(g).

Based on this preliminary factual determination, the Eastern Pequot should be granted Federal acknowledgment under 25 CFR Part 83.

This proposed positive finding for the Eastern Pequot and the positive proposed finding for the Paucatuck petitioner which is being issued simultaneously do not prevent the Department, in the final determination stage, from recognizing a combined entity, or both petitioners, or either one of the current petitioners but not the other, or neither of the current petitioners, depending upon the evidence and analysis developed during the comment periods by both petitioners and all interested and informed parties, as verified and evaluated by Bureau of Indian Affairs staff.

As provided by 25 CFR 83.10(h) of the regulations, a report summarizing the evidence, reasoning, and analyses that are the basis for the proposed decision will be provided to the petitioner and interested parties, and is available to other parties upon written request. Under the Assistant Secretary's directive, the technical report prepared in addition to this summary evaluation report of the evidence will not be completed but will remain in draft.

Comments on the proposed finding and/or requests for a copy of the report of evidence should be addressed to the Office of the Assistant Secretary—Indian Affairs, Bureau of Indian Affairs, 1849 C Street, NW, Washington, DC 20240, Attention: Branch of Acknowledgment and Research, Mail Stop 4660—MIB. Comments on the proposed finding should be submitted within 180 calendar days from the date of publication of this notice. The period for comment on a proposed finding may be extended for up to an additional 180 days at the Assistant Secretary's discretion upon a finding of good cause (83.10(i)). Comments by interested and informed parties must be provided to the petitioner as well as to the Federal Government (83.10(h)). After the close of the 180-day comment period, and any extensions, the petitioner has 60 calendar days to respond to third-party comments (83.10(k)). This period may be extended at the Assistant Secretary's discretion if warranted by the extent and nature of the comments.

The proposed finding takes into consideration only materials from the petitioner and all interested parties submitted through April 5, 1999. Subsequent submissions have been held by the Bureau of Indian Affairs and will be considered during preparation of the final determination.

In addition to evidence and argument on the proposed findings in general, petitioners, interested parties and informed parties may submit comments as to the Secretary's authority, under the circumstances of recent separation of the two petitioners, to acknowledge two tribes or only one tribe which encompasses them both as the continuation of the historical tribe.

After the expiration of the comment and response periods described above, the Bureau of Indian Affairs will consult with the petitioner concerning establishment of a time frame for preparation of the final determination. After consideration of the written arguments and evidence rebutting the proposed finding and within 60 days after beginning preparation of the final determination, the Assistant Secretary—Indian Affairs will publish the final determination of the petitioner's status in the **Federal Register** as provided in 25 CFR 83.10(1).

Dated: March 24, 2000.

Kevin Gover,

Assistant Secretary—Indian Affairs.

[FR Doc. 00–8041 Filed 3–30–00; 8:45 am]

BILLING CODE 4310–02–P

DEPARTMENT OF THE INTERIOR

Bureau of Land Management

[MT–921–00–1320–EL–P; MTM 89848]

Notice of Invitation—Coal Exploration License Application MTM 89848

AGENCY: Bureau of Land Management, Montana State Office, Interior.

SUMMARY: Members of the public are hereby invited to participate with Western Minerals, Inc., and KCP, Inc., a joint venture d/b/a Decker Coal Company, in a program for the exploration of coal deposits owned by the United States of America in the following-described lands located in Big Horn County, Montana:

T. 9 S., R. 40 E., P.M.M.

Sec. 4: Lot 4, SW¼NW¼,
Sec. 5: S½ of Lot 1, S½NE¼, N½N½SE¼.
220.355 acres.

SUPPLEMENTARY INFORMATION: Any party electing to participate in this

exploration program shall notify, in writing, both the State Director, Bureau of Land Management, P.O. Box 36800, Billings, Montana 59107–6800; and Decker Coal Company, P.O. Box 12, Decker, Montana 59025. Such written notice must refer to serail number MTM 89848 and be received no later than 30 calendar days after publication of this Notice in the **Federal Register** or 10 calendar days after the last publication of this Notice in the Big Horn County News newspaper, whichever is later. This Notice will be published once a week for two (2) consecutive weeks in the Big Horn County News, Hardin, Montana.

The proposed exploration program is fully described, and will be conducted, pursuant to an exploration plan to be approved by the Bureau of Land Management. The exploration plan, as submitted by Decker Coal Company, is available for public inspection at the Bureau of Land Management, Montana State Office, 5001 Southgate Drive, Billings, Montana, during regular business hours (9 a.m. to 4 p.m.), Monday through Friday.

FOR FURTHER INFORMATION CONTACT: Either Robert Giovanini, Mining Engineer, or Bettie Schaff, Land Law Examiner, Branch of Solid Minerals (MT–921), Bureau of Land Management, Montana State Office, P.O. Box 36800, Billings, Montana 59017–6800, telephone (406) 896–5084 or (406) 896–5063, respectively.

Dated: March 27, 2000.

Randy D. Heuscher,

Chief, Branch of Solid Minerals.

[FR Doc. 00–7953 Filed 3–30–00; 8:45 am]

BILLING CODE 4310–$$–P

DEPARTMENT OF THE INTERIOR

Bureau of Land Management

[CA–680–00–1220–HQ]

The Proposal of a Supplemental Rule Restricting Recreational Shooting to Protect Human Health and Safety in the Populated Western Portion of Wonder Valley California

AGENCY: Bureau of Land Management, Department of the Interior, Barstow Field Office, Desert District, California.

ACTION: This notice proposes that on those public lands administered by the BLM and bounded to the west by the corporate limits of the City of Twentynine Palms California, the south by Joshua Tree National Park, the north by the Marine Corps Air Ground Combat Center and the east by Range 11 East, San Bernardino Meridian, it would be prohibited to fire any firearm except shotguns with shot shells containing shot no larger than one-half the diameter of the bore. This proposed supplemental rule would not affect the legitimate and legal pursuit of game or shooting at controlled, permitted ranges.

SUMMARY: In accordance with Title 43, Code of Federal Regulations Section 8365.1–6, the State Director may establish supplementary rules in order to provide for the protection of persons, property and public lands and resources. This authority was delegated to the District Managers and Field Managers pursuant to BLM Manual 1203, California Supplement. Failure to comply with this proposed supplementary rule would be punishable by a fine not to exceed $100,000 and/or imprisonment not to exceed twelve months. The environmental effects of the proposed rule will be analyzed separately by Environmental Assessment CA–680–00–29.

DATES: Comments must be received in writing to the BLM no later than thirty days after the publishing of this proposed supplementary rule.

ADDRESSES: Written comments shall be mailed to the following addresses: Mr. Tim Read, Field Manager, Bureau of Land Management, Barstow Field Office, 2601 Barstow Road, Barstow, CA 92311.

SUPPLEMENTARY INFORMATION: Uncontrolled recreational shooting on public land create a public health and safety hazard by firing solid projectile firearms (such as rifles and pistols), that have a long range, into and about a populated rural area. The area of concern also receives heavy recreational use by equestrians, recreational miners and off-highway vehicles. BLM has received complaints from area residents and recreationist that have nearly been struck by stray bullets from recreational shooting. This proposed supplemental rule would prohibit the firing of any firearm except shotguns with shot shells containing shot no larger than one-half the diameter of the bore. Rounds of this type have less energy and travel considerably shorter distanced than solid projectiles (such as those fired from a rifle or pistol). By prohibiting all but low energy, short range gunfire a safer environment on both public and private lands within this populated area will be created. This proposed supplementary rule only affects public lands administered by BLM and would not affect the legitimate and legal pursuit of game or shooting at controlled, permitted ranges. This proposed supplemental rule will not infringe upon Constitutional rights of an individual to own or possess a lawful firearm.

FOR ADDITIONAL INFORMATION CONTACT: BLM Barstow Field Office, 2601 Barstow Road, Barstow, CA 92231, telephone (760) 252–6000.

Tim Read,

Field Manager.

[FR Doc. 00–8017 Filed 3–31–00; 8:45 am]

BILLING CODE 4310–40–P

DEPARTMENT OF THE INTERIOR

National Park Service

Notice of Intent To Repatriate Cultural Items From the Island of Oahu, HI in the Possession of the Bernice Pauahi Bishop Museum, Honolulu, HI

AGENCY: National Park Service.

ACTION: Notice.

Notice is hereby given under the Native American Graves Protection and Repatriation Act, 43 CFR 10.10(a)(3), of the intent to repatriate cultural items from the Island of Oahu, HI in the possession of the Bernice Pauahi Bishop Museum, Honolulu, HI which meet the definition of ''unassociated funerary object'' under Section 2 of the Act.

The 94 cultural items include a tobacco pipe (B.1451), a stone mortar or bait cup (''kapu ahi kuni ana ana'', B.06374), part of a canoe (B.07852), four pieces of tapa (B.7886) and part of a canoe (B.7885), a wooden digging stick (o'o, B.008866), marble or konane stones (B.09256), stone and china beads (C.0505), a partially broken clay tobacco pipe (C.3233), a stone lamp (C.4380), a calcite pendant (C.9589), three niho palaoa pendants (C.9776–9778), two pieces of a coffin (C.9817–9818), a wooden mixer or tapa implement (C.9972), a section of a canoe (1950.136), a carved bowl with human support figures (D.0565), a piece of cordage (Oa–38), a gourd fragment (Oa–95), a basalt adz chip (Oa–96), four tapa fragments (Oa–97, Oa–99, Oa–100), cordage (Oa–101), cordage (Oa–102), two wood pipes (Oa–21, Oa–22), cordage (Oa–23), a ceramic ink jar (D.2099), a necklace of bone and glass beads (D.2100), a wood pipe and a piece of brown cloth (Oa–43), a broken wooden spear (Oa–57), a section of a wooden canoe used as a coffin (D.02829), a stone pounder (D.02978), a wooden tobacco pipe (Oa–69), metal and wood pieces of a tobacco pipe (Oa–70), a knife handle and blade of ivory and steel (Oa–71), an ivory wrist ornament (Oa–72), a double-sided

tortoise shell comb (Oa–73), a glass and wood hand-mirror (Oa–74), large red-glazed ceramic beads (Oa–75), small red-glazed ceramic beads (Oa–76), medium clear glass beads (Oa–77), medium blue glass beads (Oa–78), medium yellow glass beads (Oa–79), wood fragments and a cane knife handle (1971.182), a basalt lamp (1977.158), a copper medallion, one hand-wrought brass nail, and 17 purplish-pink glass beads (1981.033), a game stone (1981.052), a length of cordage, a mat fragment, and 17 pieces of patterned tin (1991.352), and a coconut shell bowl (1994.030).

In 1898, a tobacco pipe (B.1451) was found with human remains on the ''Cooper tract'' in Manoa. In 1918, this cultural item was donated to the Bishop Museum by Henry E. Cooper.

Around 1910, the stone mortar or bait cup (B.06374, ''kapu ahi kuni ana ana'') was found in the hand of an individual during an excavation in Waikiki. In 1923, this cultural item was donated to the Bishop Museum by Mrs. A.A. Meyer.

In 1924, part of a canoe (B.07852) was removed from a burial cave between Wai'anae and Makaha and was donated to the Bishop Museum by C.S. Judd.

In 1924, part of a canoe (B.07884), and four pieces of tapa (B.7885A–C and B.7886) were all removed from a burial cave between Wai'anae and Makaha and donated to the Bishop Museum by C.S. Judd.

In 1926, a wood digging stick or o'o (B.08866) was removed from a burial cave, possibly in Wailupe, and donated to the Bishop Museum by Ft. Commander Gray.

In 1926, marble stones or konane stones (B.09256) were found near human remains on Ehrhorn's lot in Mills Tract, Manoa, Oahu; and were donated to the Bishop Museum by E.M. Ehrhorn.

In 1927, stone and china beads (C.0505), attributed to a burial cave on the grounds of the Royal Hawaiian Hotel, were donated to the Bishop Museum as part of the Albert Koehele collection, by W.M. Giffard.

In 1931, a partially broken clay tobacco pipe (C.3233) was removed from a Niu burial cave by J.G. McAllister of the Bishop Museum.

In 1931, a stone lamp (C.4380) was removed from a burial in Halawa, near the north gate of Pearl Harbor, and was purchased by the Bishop Museum from Paul Crackel.

In 1943, a calcite pendant, found with eight skeletons near the Kahuku Airfield, was donated to the Bishop Museum by Peter H. Vogel.

In 1946, three niho palaoa pendants (C.9776–C.9778), recovered from a burial vault in Hakipu'u, were donated to the Bishop Museum by A.F. Judd.

In 1946, two pieces of wood probably from a coffin (C.9817), C.9818) were collected by J.G. McAllister of the Bishop Museum from Kamailo cave, district unknown.

In 1947, a wooden mixer or tapa implement (C.9972), removed from a burial cave in Liliha, Kapalama in 1909, was donated to the Bishop Museum by James Hammond.

In 1950, a section of canoe (1950.136) which had contained human remains and other associated funerary objects from a Wailupe Valley burial cave were collected and donated to the Bishop Museum by William Davenport. Bishop Museum staff were able to locate the canoe, but unable to locate the canoe's recorded contents, including the human remains.

In 1953, a carved bowl with human support figures (D.0565), recovered from a burial cave in Waimalu Valley, were collected and donated to the Bishop Museum by Richard Nishino and Rodney Minami.

In 1953, a piece of cordage (Oa–38) was collected from a burial cave in Wimalu by K.P. Emory of the Bishop Museum.

In 1955, a gourd fragment (Oa–95), a basalt adz chip (Oa–96), four tapa fragments (Oa–97–Oa–100), and two cordage fragments (Oa–101–Oa102) were removed for a burial cave in Wailupe by George Arnemann of the Bishop Museum.

In 1957, two wood pipes (Oa–21–Oa–22) and cordage (Oa–23) were removed from a burial site in Waimalu by Robert Bowen and Blackburn of the Bishop Museum.

In 1959, a ceramic ink jar (D.2099) and a necklace of bone and glass beads (D.2100) were found with a burial on Mr. Larry Kamada's land in Wai'anae and donated by him to the Bishop Museum.

In 1960, a wood pipe and a small piece of brown cloth (Oa–43) were removed from a Wailupe Valley burial cave by Robert Bowen of the Bishop Museum. The human remains reported with these cultural items have not been located by the Bishop Museum.

In 1962, a broken wooden spear (Oa–57) was collected from a small burial in ''Ewa and is now in collections of the Bishop Museum.

In 1963, a section of wood canoe used as a coffin (D.02829), recovered from a tree near Waimea Bay, was donated to the Bishop Museum by John E. Fergus.

In 1964, a stone pounder (D.02978), removed from a shallow burial in 1931–1932 in McCully, was donated to the Bishop Museum by Oswald Sheather.

In 1965, a wooden tobacco pipe (Oa–69), metal and wood pieces of a tobacco pine (Oa–70), a knife handle and blade of ivory and steel (Oa–71), an ivory wrist ornament (Oa–72), a double-sided tortoise shell comb (Oa–73), a glass and wood hand-mirror (Oa–74), large red-glazed ceramic beads (Oa–75), small red-glazed ceramic beads (Oa–76), medium clear glass beads (Oa–77), medium blue glass beads (Oa–78), medium yellow glass beads (Oa–79) were removed from a Ka'a'awa burial cave by Lloyd Soehren of the Bishop Museum.

In 1971, wood fragments and a cane knife handle (1971.182), were removed from a Makiki Valley burial cave by Pat McCoy of the Bishop Museum.

In 1977, a basalt lamp (1977.158) which had been removed from a burial cave in Kahuku circa 1971–1918 by Mrs. Alda H. Jett of California was purchased from her by the Bishop Museum.

In 1981, a copper medallion, one hand-wrought brass nail, and 17 purplish glass beads (1981.033) were removed from a Punchbowl burial and donated to the Bishop Museum by Dr. Don Thomas.

In 1981, a game stone or ulumaika (1981.052) had been placed in or near a burial and was found in the yard of Dora Jacroux of the Bishop Museum, in Manoa during the early 1950s.

In 1991, one length of cordage, a fragment of mat, and 17 pieces of patterned tin (1991.352) were removed from a Wailupe Valley burial Cave.

In 1994, a coconut shell bowl (1994.030), apparently removed from a burial ground in the hills of Makakilo, was donated to the Bishop Museum by an anonymous donor.

Based on types of items, accession records, or known burial contexts, all the cultural items listed above have been determined to have come from burials. Excavation records for some of the cultural items indicate that the human remains with whom these cultural items were associated were not collected, or were collected but have not been located within the Bishop Museum's collections.

Based on the above mentioned information, officials of the Bishop Museum have determined that, pursuant to 43 CFR 10.2(d)(2)(ii), these 94 cultural items are reasonably believed to have been placed with or near individual human remains at the time of death or later as part of the death rite or ceremony and are believed, by a preponderance of the evidence, to have been removed from a specific burial site of an Native American individual.

Officials of the Bishop Museum have also determined that, pursuant to 43 CFR 10.2 (e), there is a relationship of shared group identity which can be reasonably traced between these items and Hui Malama I Na Kupuna O Hawai'i Ne, Ka Lahui Hawai'i, Kamehameha Schools, Office of Hawaiian Affairs, and Pa Ku'i-a-Lua.

This notice has been sent to officials of Hui Malama I Na Kupuna O Hawai'i Ne, Ka Lahui Hawai'i, Kamehameha Schools, Koa Mana, Ko'olauloa Hawaiian Civic Club, Mauna Ala Mausoleum, O'ahu Island Burial Council, Office of Hawaiian Affairs, and Pa Ku'i-a-Lua. Representatives of any other Indian tribe that believes itself to be culturally affiliated with these objects should contact Valerie Free, Unit Manager, Bishop Museum, 1525 Bernice Street, Honolulu, HI 96817, telephone: (808) 847–8205 before May 1, 2000. Repatriation of these objects to Hui Malama I Na Kupuna O Hawai'i Ne, Ka Lahui Hawai'i, Kamehameha Schools, Office of Hawaiian Affairs, and Pa Ku'i-a-Lua may begin after that date if no additional claimants come forward.

Dated: March 9, 2000.

Francis P. McManamon,

Departmental Consulting Archeologist, Manager, Archeology and Ethnography Program.

[FR Doc. 00–7848 Filed 3–30–00; 8:45 am]

BILLING CODE 4316–70–M

DEPARTMENT OF THE INTERIOR

Bureau of Reclamation

Ecosystem Restoration Program Pre-Submittal Workshop for the 2001 Proposal Solicitation Package

AGENCY: Bureau of Reclamation, Interior.

ACTION: Notice of meeting.

SUMMARY: The CALFED Bay-Delta Ecosystem Restoration Program will hold a Pre-Submittal Workshop for the 2001 Proposal Solicitation Package (PSP). This workshop is an opportunity for the public to ask questions regarding the PSP. Adaptive management and conceptual models will be discussed. Shortly after the workshop, CALFED staff will provide a written response to common questions from all attendees at the workshop and those who have received this proposal solicitation package via mail. This will also be posted on the CALFED website at calfed.ca.gov.

DATES: The Pre-Submittal Workshop will be held from 1 p.m. to 4 p.m. on Wednesday, April 12, 2000.

ADDRESSES: The Pre-Submittal Workshop will meet at the Resources Building Auditorium, 1416 Ninth Street, Sacramento, CA 95814.

FOR FURTHER INFORMATION CONTACT: Wendy Halverson Martin, CALFED Bay-Delta Program, at (916) 657–2666. If reasonable accommodation is needed due to a disability, please contact the Equal Employment Opportunity Office at (916) 653–6952 or TDD (916) 653–6934 at least one week prior to the meeting.

SUPPLEMENTARY INFORMATION: The San Francisco Bay/Sacramento-San Joaquin Delta Estuary (Bay-Delta system) is a critically important part of California's natural environment and economy. In recognition of the serious problems facing the region and the complex resource management decisions that must be made, the state of California and the Federal government are working together to stabilize, protect, restore, and enhance the Bay-Delta system. The State and Federal agencies with management and regulatory responsibilities in the Bay-Delta system are working together as CALFED to provide policy direction and oversight for the process.

One area of Bay-Delta management includes the establishment of a joint State-Federal process to develop long-term solutions to problems in the Bay-Delta system related to fish and wildlife, water supply reliability, natural disasters, and water quality. The intent is to develop a comprehensive and balanced plan which addresses all of the resource problems. This effort, the CALFED Bay-Delta Program (Program), is being carried out under the policy direction of CALFED. The Program is exploring and developing a long-term solution for a cooperative planning process that will determine the most appropriate strategy and actions necessary to improve water quality, restore health to the Bay-Delta ecosystem, provide for a variety of beneficial uses, and minimize Bay-Delta system vulnerability. The Ecosystem Restoration Program is a program element of CALFED which is currently soliciting proposals for ecosystem restoration activities.

Dated: March 27, 2000.

Kirk C. Rodgers,

Deputy Regional Director, Mid-Pacific Region, Bureau of Reclamation, Department of the Interior.

[FR Doc. 00–7948 Filed 3–30–00; 8:45 am]

BILLING CODE 4310–94–M

INTERNATIONAL TRADE COMMISSION

Certain Pipe and Tube From Argentina, Brazil, Canada, India, Korea, Mexico, Singapore, Taiwan, Thailand, Turkey, and Venezuela [1]

AGENCY: United States International Trade Commission.

ACTION: Revised schedule for the subject 5-year reviews.

EFFECTIVE DATE: March 24, 2000.

FOR FURTHER INFORMATION CONTACT: Brian R. Allen (202–708–4728), Office of Investigations, U.S. International Trade Commission, 500 E Street SW, Washington, DC 20436. Hearing-impaired persons can obtain information on this matter by contacting the Commission's TDD terminal on 202–205–1810. Persons with mobility impairments who will need special assistance in gaining access to the Commission should contact the Office of the Secretary at 202–205–2000. General information concerning the Commission may also be obtained by accessing its internet server (http://www.usitc.gov).

SUPPLEMENTARY INFORMATION: On September 28, 1999, the Commission established a schedule for the conduct of the subject 5-year reviews (64 FR 54354, October 6, 1999). The Commission has determined to exercise its authority to extend the review period by up to 90 days pursuant to 19 U.S.C. 1675(c)(5)(B), and is hereby revising its schedule.

The Commission's new schedule for the reviews is as follows: the Commission will make its final release of information on May 30, 2000; and final party comments are due on June 1, 2000.

For further information concerning the reviews see the Commission's notice cited above and the Commission's Rules of Practice and Procedure, part 201, subparts A through E (19 CFR part 201),

[1] The products and investigation numbers for the various countries are: Argentina: light-walled rectangular tube (731–TA–409); Brazil: circular welded nonalloy steel pipe (731–TA–532); Canada: oil country tubular goods (731–TA–276); India: welded carbon steel pipe and tube (731–TA–271); Korea: circular welded nonalloy steel pipe (731–TA–533); Mexico: circular welded nonalloy steel pipe (731–TA–534); Singapore: small diameter standard and rectangular pipe and tube (731–TA–296); Taiwan: small diameter carbon steel pipe and tube (731–TA–132), oil country tubular goods (731–TA–277), light-walled rectangular tube (731–TA–410), and circular welded nonalloy steel pipe (731–TA–536); Turkey: welded carbon steel pipe and tube (701–TA–253 and 731–TA–273); Thailand: welded carbon steel pipe and tube (731–TA–252); and Venezuela: circular welded nonalloy steel pipe (731–TA–537).

and part 207, subparts A and F (19 CFR part 207).

Authority: These reviews are being conducted under authority of title VII of the Tariff Act of 1930; this notice is published pursuant to section 207.21 of the Commission's rules.

Issued: March 24, 2000.

By order of the Commission.

Donna R. Koehnke,

Secretary.

[FR Doc. 00–8029 Filed 3–30–00; 8:45 am]

BILLING CODE 7020–02–P

INTERNATIONAL TRADE COMMISSION

[Investigations Nos. 731–TA–540 and 541 (Review)]

Certain Welded Stainless Steel Pipe From Korea and Taiwan

AGENCY: United States International Trade Commission.

ACTION: Scheduling of full five-year reviews concerning the antidumping duty orders on certain stainless steel pipe from Korea and Taiwan.

SUMMARY: The Commission hereby gives notice of the scheduling of full reviews pursuant to section 751(c)(5) of the Tariff Act of 1930 (19 U.S.C. 1675(c)(5)) (the Act) to determine whether revocation of the antidumping duty orders on certain welded stainless steel pipe from Korea and Taiwan would be likely to lead to continuation or recurrence of material injury within a reasonably foreseeable time. For further information concerning the conduct of these reviews and rules of general application, consult the Commission's Rules of Practice and Procedure, part 201, subparts A through E (19 CFR part 201), and part 207, subparts A, D, E, and F (19 CFR part 207).

EFFECTIVE DATE: March 24, 2000.

FOR FURTHER INFORMATION CONTACT: Woodley Timberlake (202–205–3188), Office of Investigations, U.S. International Trade Commission, 500 E Street SW, Washington, DC 20436. Hearing-impaired persons can obtain information on this matter by contacting the Commission's TDD terminal on 202–205–1810. Persons with mobility impairments who will need special assistance in gaining access to the Commission should contact the Office of the Secretary at 202–205–2000. General information concerning the Commission may also be obtained by accessing its internet server (http://www.usitc.gov).

SUPPLEMENTARY INFORMATION:

Background.—On October 1, 1999, the Commission determined that responses to its notice of institution of the subject five-year reviews were such that full reviews pursuant to section 751(c)(5) of the Act should proceed (64 FR 55961, October 15, 1999). A record of the Commissioners' votes, the Commission's statement on adequacy, and any individual Commissioner's statements are available from the Office of the Secretary and at the Commission's web site.

Participation in the reviews and public service list.—Persons, including industrial users of the subject merchandise and, if the merchandise is sold at the retail level, representative consumer organizations, wishing to participate in these reviews as parties must file an entry of appearance with the Secretary to the Commission, as provided in section 201.11 of the Commission's rules, by 45 days after publication of this notice. A party that filed a notice of appearance following publication of the Commission's notice of institution of the reviews need not file an additional notice of appearance. The Secretary will maintain a public service list containing the names and addresses of all persons, or their representatives, who are parties to the reviews.

Limited disclosure of business proprietary information (BPI) under an administrative protective order (APO) and BPI service list.—Pursuant to section 207.7(a) of the Commission's rules, the Secretary will make BPI gathered in these reviews available to authorized applicants under the APO issued in the reviews, provided that the application is made by 45 days after publication of this notice. Authorized applicants must represent interested parties, as defined by 19 U.S.C. 1677(9), who are parties to the reviews. A party granted access to BPI following publication of the Commission's notice of institution of the reviews need not reapply for such access. A separate service list will be maintained by the Secretary for those parties authorized to receive BPI under the APO.

Staff report.—The prehearing staff report in the reviews will be placed in the nonpublic record on July 12, 2000, and a public version will be issued thereafter, pursuant to section 207.64 of the Commission's rules.

Hearing.—The Commission will hold a hearing in connection with the reviews beginning at 9:30 a.m. on August 1, 2000, at the U.S. International Trade Commission Building. Requests to appear at the hearing should be filed in writing with the Secretary to the Commission on or before July 24, 2000. A nonparty who has testimony that may aid the Commission's deliberations may request permission to present a short statement at the hearing. All parties and nonparties desiring to appear at the hearing and make oral presentations should attend a prehearing conference to be held at 9:30 a.m. on July 27, 2000, at the U.S. International Trade Commission Building. Oral testimony and written materials to be submitted at the public hearing are governed by sections 201.6(b)(2), 201.13(f), 207.24, and 207.66 of the Commission's rules. Parties must submit any request to present a portion of their hearing testimony *in camera* no later than 7 days prior to the date of the hearing.

Written submissions.—Each party to the reviews may submit a prehearing brief to the Commission. Prehearing briefs must conform with the provisions of section 207.65 of the Commission's rules; the deadline for filing is July 21, 2000. Parties may also file written testimony in connection with their presentation at the hearing, as provided in section 207.24 of the Commission's rules, and posthearing briefs, which must conform with the provisions of section 207.67 of the Commission's rules. The deadline for filing posthearing briefs is August 10, 2000; witness testimony must be filed no later than three days before the hearing. In addition, any person who has not entered an appearance as a party to the reviews may submit a written statement of information pertinent to the subject of the reviews on or before August 10, 2000. On August 30, 2000, the Commission will make available to parties all information on which they have not had an opportunity to comment. Parties may submit final comments on this information on or before September 1, 2000, but such final comments must not contain new factual information and must otherwise comply with section 207.68 of the Commission's rules. All written submissions must conform with the provisions of section 201.8 of the Commission's rules; any submissions that contain BPI must also conform with the requirements of sections 201.6, 207.3, and 207.7 of the Commission's rules. The Commission's rules do not authorize filing of submissions with the Secretary by facsimile or electronic means.

In accordance with sections 201.16(c) and 207.3 of the Commission's rules, each document filed by a party to the reviews must be served on all other parties to the reviews (as identified by either the public or BPI service list), and a certificate of service must be timely filed. The Secretary will not accept a document for filing without a certificate of service.

Authority: These reviews are being conducted under authority of title VII of the Tariff Act of 1930; this notice is published pursuant to section 207.62 of the Commission's rules.

By order of the Commission.

Issued: March 24, 2000.

Donna R. Koehnke,

Secretary.

[FR Doc. 00–8028 Filed 3–30–00; 8:45 am]

BILLING CODE 7020–02–P

DEPARTMENT OF JUSTICE

Immigration and Naturalization Service

Agency Information Collection Activities Proposed Collection; Comment Request

ACTION: Notice of Information Collection Under Review; Petition for Nonimmigrant Worker.

The Department of Justice, Immigration and Naturalization Service has submitted the following information collection request for review and clearance in accordance with the Paperwork Reduction Act of 1995. The proposed information collection is published to obtain comments from the public and affected agencies. Comments are encouraged and will be accepted for ''sixty days'' until May 30, 2000.

Written comments and suggestions from the public and affected agencies concerning the proposed collection of information should address one or more of the following four points:

(1) Evaluate whether the proposed collection of information is necessary for the proper performance of the functions of the agency, including whether the information will have practical utility;

(2) Evaluate the accuracy of the agency's estimate of the burden of the proposed collection of information, including the validity of the methodology and assumptions used;

(3) Enhance the quality, utility, and clarity of the information to be collected; and

(4) Minimize the burden of the collection of information on those who are to respond, including through the use of appropriate automated, electronic, mechanical, or other technological collection techniques or other forms of information technology, e.g., permitting electronic submission of responses.

Overview of this information collection:

(1) *Type of Information Collection:* Revision of currently approved collection.

(2) *Title of the Form/Collection:* Petition for Nonimmigrant Worker.

(3) *Agency form number, if any, and the applicable component sponsoring the collection:* Form I–129. Adjudications Division, Immigration and Naturalization Service.

(4) *Affected public who will be asked or required to respond, as well as a brief abstract:* Primary: Business or other for-profit. This form is used to petition for temporary workers and for the admission of treaty traders and investors. It is also used in the process of an extension of stay or for a change of nonimmigrant status.

(5) *An estimate of the total number of respondents and the amount of time estimated for an average respondent to respond:* 368,948 responses at 1 hour and 55 minutes (1.916 hours) per response.

(6) *An estimate of the total public burden (in hours) associated with the collection:* 706,904 annual burden hours.

If you have additional comments, suggestions, or need a copy of the proposed information collection instrument with instructions, or additional information, please contact Richard A. Sloan 202–514–3291, Director, Policy Directives and Instructions Branch, Immigration and Naturalization Service, U.S. Department of Justice, Room 5307, 425 I Street, NW, Washington, DC 20536. Additionally, comments and/or suggestion regarding the item(s) contained in this notice, especially regarding the estimated public burden and associated response time may also be directed to Mr. Richard A. Sloan.

If additional information is required contact Mr. Robert B. Briggs, Clearance Officer, U.S. Department of Justice, Information Management and Security Staff, Justice Management Division, Suite 850, Washington Center Building, 1001 G Street, NW, Washington, DC 20530.

Dated: March 27, 2000.

Richard A. Sloan,

Department Clearance Officer, Department of Justice, Immigration and Naturalization Service.

[FR Doc. 00–7961 Filed 3–30–00; 8:45 am]

BILLING CODE 4410–10–M

DEPARTMENT OF JUSTICE

Immigration and Naturalization Service

Agency Information Collection Activities: Comment Request

ACTION: Notice of Information Collection Under Review; H–1B Data Collection and Filing Fee Exemption.

The Department of Justice, Immigration and Naturalization Service has submitted the following information collection request for review and clearance in accordance with the Paperwork Reduction Act of 1995. The proposed information collection is published to obtain comments from the public and affected agencies. Comments are encouraged and will be accepted for ''sixty days'' until May 30, 2000.

Written comments and suggestions from the public and affected agencies concerning the proposed collection of information should address one or more of the following four points:

(1) Evaluate whether the proposed collection of information is necessary for the proper performance of the functions of the agency, including whether the information will have practical utility;

(2) Evaluate the accuracy of the agencies estimate of the burden of the proposed collection of information, including the validity of the methodology and assumptions used;

(3) Enhance the quality, utility, and clarity of the information to be collected; and

(4) Minimize the burden of the collection of information on those who are to respond, including through the use of appropriate automated, electronic, mechanical, or other technological collection techniques or other forms of information technology, *e.g.*, permitting electronic submission of responses.

Overview of this information collection:

(1) *Type of Information Collection:* Extension of currently approved collection.

(2) *Title of the Form/Collection:* H–1B Data Collection and Filing Fee Exemption.

(3) *Agency form number, if any, and the applicable component of the Department of Justice sponsoring the collection:* Form I–129W. Adjudications Division, Immigration and Naturalization Service.

(4) *Affected public who will be asked or required to respond, as well as a brief abstract:* Primary: Business or other for-profit. This addendum to Form I–129 will be used by the INS to determine if

an H–1B petitioner is exempt from the additional filing fee of $500, as provided by the American Competitiveness and Workforce Improvement Act of 1998.

(5) *An estimate of the total number of respondents and the amount of time estimated for an average respondent to respond:* 128,092 responses at 30 minutes (.50) per response.

(6) *An estimate of the total public burden (in hours) associated with the collection:* 64,046 annual burden hours.

If you have additional comments, suggestions, or need a copy of the proposed information collection instrument with instructions, or additional information, please contact Richard A. Sloan, 202–514–3291, Director, Policy Directives and Instructions Branch, Immigration and Naturalization Service, U.S. Department of Justice, Room 5307, 425 I Street, NW., Washington, DC 20536. Additionally, comments and/or suggestions regarding item(s) contained in this notice, especially regarding the estimated public burden and associated response time may also be directed to Mr. Richard A. Sloan.

If additional information is required contact: Mr. Robert B. Briggs, Clearance Officer, United States Department of Justice, Information Management and Security Staff, Justice Management Division, Suite 850, Washington Center, 1001 G Street, NW., Washington, DC 20530.

Dated: March 27, 2000.

Richard A. Sloan,

Department Clearance Officer, Department of Justice, Immigration and Naturalization Service.

[FR Doc. 00–7962 Filed 3–30–00; 8:45 am]

BILLING CODE 4410–10–M

DEPARTMENT OF JUSTICE

National Institute of Corrections

Solicitation for a Cooperative Agreement—Development of Comprehensive Objective Prison Classification Systems

AGENCY: National Institute of Corrections, Department of Justice.

ACTION: Solicitation for a cooperative agreement.

SUMMARY: This project will provide technical assistance to correctional agencies to update and improve objective classification systems; to build capacities in correctional agencies that will enable them to continue improvements; to validate or re-validate classification risk instruments; to expand the knowledge of research and strategies for appropriate and effective correctional classification practices that respond to emerging issues and management concerns; and to encourage the development of comprehensive objective classification systems.

The components of comprehensive objective prison classification systems will include external classification (security and custody for facility placement and supervision, including validation of risk instruments); internal classification (systems for guiding housing, work and program assignments within facilities); identification of desirable enhancements to the classification systems through information technology; development of gender-responsive strategies to appropriately classify women offenders; as well as to promote effective correctional practices for such areas as intake, needs assessment, community transition, and management of high risk offenders.

The recipient of this cooperative agreement award will provide on-site technical assistance to six to eight state correctional agencies that are assessing, validating and improving objective prison classification systems. This work will emphasize the importance of strategic planning and development of comprehensive objective prison classification systems that incorporate a strategically planned continuum of management strategies linking the essential and desirable elements of objective prison classification.

This project will also facilitate a two-day training program at the NIC Training Academy in Longmont, CO, and produce a record of proceedings of the peer training with practitioners.

Project Objectives: The primary objectives of this cooperative agreement are to provide concentrated on-site technical assistance to selected correctional agencies requesting assistance and to advance the development of comprehensive objective prison classification systems.

Scope of Work: There will be three major components in the scope of work:

1. Technical Assistance

On-site technical assistance will be provided to at least six correctional agencies through a clear, well-organized work plan that is responsive to each agency's needs and level of sophistication. This will require classification experts that are knowledgeable of correctional operations and principles of objective prison classification; have expertise in assessment, evaluation and validation research; understand the needs of practitioners and correctional agencies; are informed and sensitive to requirements for addressing gender-specific issues; and have demonstrated effectiveness in project management.

2. Training Program

Peer training will be conducted at the NIC Training Academy in Longmont, CO, with practitioners from a number of state correctional agencies that have recently received assistance through NIC. This will provide knowledgeable classification practitioners exposure to national issues through peer discussions facilitated by classification experts. The program will provide a forum for sharing developments in objective prison classification and provide an opportunity to broaden the understanding of better practices in prison classification. A report will be developed through the cooperative agreement to record the proceedings of the of the peer training.

NIC will provide funding for participant travel for the training program separately from the award.

3. Guidelines and Other Publications or Reports

A guidelines publication will be written on the development and management of comprehensive objective prison classification systems by utilizing classification experts, recommendations from practitioners, and knowledge developed in previous multi-year projects. The publication will focus on the development of comprehensive systems and represent the current thinking on objective prison classification. The document must be well-organized and written in understandable language for people with classification and non-classification experience. All parts should be illustrated by case examples and lessons learned from NIC's recent state projects, state reports and training programs.

Each state that receives technical assistance through this cooperative agreement will be provided with a full report with analysis of the data, recommendations and detailed summaries of the work.

At the conclusion of the cooperative agreement, a final report, not to exceed 50 pages, will be submitted for publication describing the issues and developments with states receiving technical assistance.

In consultation with NIC, documents developed through the cooperative agreement must be submitted as an edited final camera-ready copy for NIC publication in accordance with the NIC Preparation of Printed Materials for Publication. All products from this

funding effort will be in the public domain and available to interested parties through the National Institute of Corrections.

Submission of Proposals: Applicants must provide goals, objectives, and methods of implementation for the project that are consistent with the announcement. Objectives should be clear, measurable, attainable, and focused on the methods used to conduct the project. Work activities will be coordinated closely with the NIC Program Manager.

Applicants should submit an implementation plan for the project to begin immediately following an award with a schedule in chart form which will demonstrate milestones for significant tasks. The timetable for the first quarter of the project must include making preparations for the training program that is scheduled for September 2000, the initial selection of sites, and starting on-site assistance.

Authority: Public Law 93–415.

Funds Available: The award will be limited to $300,000 (direct and indirect costs) and project activity must begin within 30 days of the date of award and be completed within 15 months. Funds may not be used for construction, or to acquire or build real property. This project will be a collaborative venture with the NIC Prisons Division.

Deadline for Receipt of Applications: Applications must be received by 4:00 PM on Friday, April 28, 2000. They should be addressed to: Director, National Institute of Corrections, 320 First Street, NW, Room 5007, Washington, DC 20534. Hand delivered applications should be brought to 500 First Street, NW, Washington, DC 20534. The front desk will call Bobbi Tinsley at (202) 307–3106, extension 0 for pickup.

Executive Order 12372: This program is subject to the provisions of Executive Order 12372. Executive Order 12372 allows States the option of setting up a system for reviewing applications from within their States for assistance under certain Federal programs. Applicants (other than Federally-recognized Indian tribal governments) should contact their State Single Point of Contact (SPOC), a list of which is included in the application Kit, along with further instructions on proposed projects serving more than one State.

Addresses and Further Information: Requests for the application kit should be directed by Judy Evens, Cooperative Agreement Control Office, National Institute of Corrections, 320 First Street, NW, Room 5007, Washington, DC 20534 or by calling 800–995–6423, ext. 159, 202–307–3106, ext. 159, or e-mail: *jevens@bop.gov.* A copy of this announcement and application forms may be obtained through the NIC web site: *http://www.nicic.org* (click on ''What's New,'' and ''Cooperative Agreements''). Additional documents can be found through this web site under ''Publications.'' All technical and/or programmatic questions concerning this announcement should be directed to Sammie Brown, Program Manager, at 320 First Street, NW, Room 5007, Washington, DC 20534 or by calling 800–995–6423, ext. 126, 202–307–3106, ext. 126, or e-mail: *sbrown@bop.gov.*

Eligibility Applicants: An eligible applicant is any state or general unit of local government, public or private agency, educational institution, organization, team, or individual with the requisite skills to successfully meet the outcome objectives of the project. Collaborative teams involving practitioners, researchers, and other individuals with expertise and experience in specialized prison classification functional areas are encouraged.

Review Considerations: Applications received under this announcement will be subjected to an NIC 3 to 5 member Peer Review Process.

Number of Awards: One (1)

NIC Application Number: 00P13. This number should appear as a reference line in your cover letter and also in box 11 of Standard Form 424.

(Catalog of Federal Domestic Assistance Number: 16.603)

Dated: March 27, 2000.

Morris L. Thigpen,

Director, National Institute of Corrections.

[FR Doc. 00–7946 Filed 3–30–00; 8:45 am]

BILLING CODE 4410–36–M

DEPARTMENT OF LABOR

Bureau of International Labor Affairs; U.S. National Administrative Office; National Advisory Committee for the North American Agreement on Labor Cooperation; Notice of Open Meeting

AGENCY: Office of the Secretary, Labor.

ACTION: Notice of open teleconference April 20, 2000.

SUMMARY: Pursuant to the Federal Advisory Committee Act (Pub. L. 94–463), the U.S. National Administrative Office (NAO) gives notice of a meeting of the National Advisory Committee for the North American Agreement on Labor Cooperation (NAALC), which was established by the Secretary of Labor.

The Committee was established to provide advice to the U.S. Department of Labor on matters pertaining to the implementation and further elaboration of the NAALC, the labor side accord to the North American Free Trade Agreement (NAFTA). The Committee is authorized under Article 17 of the NAALC.

The Committee consists of 12 independent representatives drawn from among labor organizations, business and industry, educational institutions, and the general public.

DATES: The Committee will meet on April 20, 2000 from 1:00 p.m. to 3 p.m.

ADDRESSES: U.S. Department of Labor, 200 Constitution Avenue NW, Conference Room B at C–5515, Washington, DC 20210. The meeting is oipen to the public on a first-come, first served basis.

FOR FURTHER INFORMATION CONTACT: Lewis Karesh, designated Federal Officer, U.S. NAO, U.S. Bureau of International Labor Affairs, U.S. Department of Labor, 200 Constitution Avenue, NW, Room C–4327, Washington, DC 20210. Telephone 202–501–6653 (this is not a toll free number).

SUPPLEMENTARY INFORMATION: Please refer to the notice published in the **Federal Register** on December 15, 1994 (59 FR 64713) for supplementary information.

Signed at Washington, DC on March 27, 2000.

Lewis Karesh,

Deputy Secretary, U.S. National Administrative Office.

[FR Doc. 00–7985 Filed 3–30–00; 8:45 am]

BILLING CODE 4510–28–M

DEPARTMENT OF LABOR

Employment and Training Administration

[TA–W–37, 063 and NAFTA–3605]

Kellogg Company, South Operations Plant, Battle Creek, Michigan; Notice of Affirmative Determination Regarding Application for Reconsideration

By letter of March 8, 2000, Local #3 of the Bakery, Confectionery, Tobacco Workers and Grain Millers International Union requested administrative reconsideration of the Department of Labor's Notice of Negative Determination Regarding Eligibility to Apply for Worker Adjustment Assistance and North American Free Trade Agreement-Transitional Adjustment Assistance for workers of the subject firm. The notices were signed on February 10, 2000, and will

soon be published in the **Federal Register**.

The Department has reviewed the Union's request and has determined that further investigation regarding the Union's assertions regarding the effects of a transfer of production equipment to Mexico is warranted.

Conclusion

After careful review of the application, I conclude that the claim is of sufficient weight to justify reconsideration of the Department of Labor's prior decision. The application is, therefore, granted.

Signed at Washington, DC this 21st day of March 2000.

Grant D. Beale,

Program Manager, Division of Trade Adjustment Assistance.

[FR Doc. 00–7982 Filed 3–30–00; 8:45 am]

BILLING CODE 4510–30–M

DEPARTMENT OF LABOR

Employment and Training Administration

Notice of Determinations Regarding Eligibility To Apply for Worker Adjustment Assistance and NAFTA Transitional Adjustment Assistance

In accordance with Section 223 of the Trade Act of 1974, as amended, the Department of Labor herein presents summaries of determinations regarding eligibility to apply for trade adjustment assistance for workers (TA–W) issued during the period of March, 2000.

In order for an affirmative determination to be made and a certification of eligibility to apply for worker adjustment assistance to be issued, each of the group eligibility requirements of Section 222 of the Act must be met.

(1) That a significant number of proportion of the workers in the workers' firm, or an appropriate subdivision thereof, have become totally or partially separated,

(2) That sales or production, or both, of the firm of sub-division have decreased absolutely, and

(3) That increases of imports of articles like or directly competitive with articles produced by the firm or appropriate subdivision have contributed importantly to the separations, or threat thereof, and to the absolute decline in sales or production.

Negative Determinations for Worker Adjustment Assistance

In each of the following cases the investigation revealed that criterion (3) has not been met. A survey of customers indicated that increased imports did not contribute importantly to worker separations at the firm.

TA–W–37, 194; Simonds Industries, Newcomerstown, OH

TA–W–37, 281; Appleton Papers, Inc., Harrisburg Plant, Camp Hill, PA

TA–W–37, 308; Tweco Products, A subsidiary of Thermadyne Holdings Corp., Wichita, KS

TA–W–37, 209; Agco Corp., Coldwater, OH

TA–W–37, 045; Atlas Tubular, Inc., Robstown, TX

TA–W–37, 357; Alliant Techsystems, Inc., Totowa, NJ

TA–W–37, 314; Shell Chemical Co., Point Pleasant Polyester Plant, Apple Grove, WV

TA–W–37, 241; Contour Energy Co., (Previousely Kelley Oil and Gas Corp), Houston, TX

In the following cases, the investigation revealed that the criteria for eligibility have not been met for the reasons specified.

TA–W–37, 345; Sause Bros/South Oregon Marine, Inc., Coos Bay, OR

TA–W–37, 168; North Star Steel Kentucky, Inc., Calvert City, KY

TA–W–37, 303; Motor Coils Manufacturing, Emporium, PA

TA–W–37, 393; Preston Trucking Co., Pittsburgh, PA

TA–W–37, 394; Corporate Expressions Group, Ltd, Salisbury, NC

TA–W–37, 224; Foster Wheeler Constructors, Inc., Playas, NM

TA–W–37, 367; KeyBank USA, Retail Collection and Recovery Dept, Albany, NY

TA–W–37, 130A; Hamilton Sunstrand Plant #6, East Windsor, CT

The workers firm does not produce an article as required for certification under Section 222 of the Trade Act of 1974.

TA–W–37, 354; ITW Signode Metals, Weirton, WV

TA–W–37, 297; Smiley Container Plant of Russell Stover Candies, Inc., Poplar Bluff, MO

TA–W–37, 296; BICC General, Williamstown, MA

TA–W–37, 969; Louisiana Pacific Corp., Ketchikan Pulp Co., Ketchikan Pulp Mill, Ketchikan, AK

TA–W–37, 306; Ordovician Association, Midland, TX

TA–W–37, 130; Hamilton Sunstrand, Plant #3, Windsor Locks, CT

TA–W–37, 054; Kearfott Guidance & Navigation Corp., Wayne, NJ

TA–W–37, 300; Award Window, Inc., Ferndale, WA

TA–W–37, 351; B. Braun Medical, Inc., Medical Div., St. Clair, PA

TA–W–37, 190; Tempset, Inc., St. Louis, MO

TA–W–37, 067; Packaging Corp. of America (formerly Tenneco Packaging), South Brunswick, NJ

TA–W–37, 347; Devro-Teepak, Inc., Plastic Converting Dept. Danville, IL

TA–W–37, 427; Kongsberg Automotive, Livonia, MI

TA–W–37, 302; Schmalbach-Lubec Plastic Containers USA, Inc., Novi, MI

TA–W–37, 243; Whizard Protective Wear Corp., Birmingham, OH

Increased imports did not contribute importantly to worker separations at the firm.

TA–W–37, 307; Vivid Publishing, Inc., Montoursville, PA

The investigation revealed that criteria (2) and criteria (3) have not been met. Sales or production did not decline during the relevant period as required for certification. Increases of imports of articles like or directly competitive with articles produced by the firm or an appropriate subdivision have not contributed importantly to the separations or threat thereof, and the absolute decline in sales or production.

TA–W–37, 225 & A; Middle Bay Oil Co., Inc., Wichita, KS and Houston, TX

The investigation revealed that criteria (2) has not been met. Sales or production did not decline during the relevant period as required for certification.

Affirmative Determinations for Worker Adjustment Assistance

The following certifications have been issued; the date following the company name and location of each determination references the impact date for all workers of such determination.

TA–W–37, 114; ASARCO, Inc., Leadville, CO: November 10, 1998

TA–W–37, 328; Thaw Corp. Snow Creek Div, Wenatchee, WA: January 28, 1999.

TA–W–37, 321; Cedar Brook Mfg Corp., Burnett Mfg Div., Philadelphia, PA: January 29, 1999.

TA–W–37, 271; Dynamic Detail, Inc., Colorado Springs, CO: January 11, 1999.

TA–W–37, 350; Scotts Hill Leisurewear, Scotts Hill, TN: January 26, 1999.

TA–W–37, 341 & A; Komag, Inc., San Jose, CA and Santa Clara, CA: January 19, 1999

TA–W–37, 227; Noblesville Casting, Inc., Noblesville, IN: December 29, 1998.

TA–W–37, 326; Monterey, Inc., The Mill and Consumer Products Div. Janesville, WI: January 25, 1999

TA–W–37, 287; American Timber, Olney, MT: January 1999.

TA–W–37,255; Otis Elevator Co., Bloomington, IN: January 7, 1999.

TA–W–37,199; Sulzer Pumps, Portland, OR: December 7, 1999.
TA–W–37,220; The Owenby Co., Sports Stuf Apparel, Inc., Tellico Plains, TN: December 21, 1998.
TA–W–37,283; The Nordic Group LLC, Hubbard, OR: January 12, 1999.
TA–W–37,315; The Nordic Group LLC, Vancouver, WA: January 25, 1999.
TA–W–37,336; ISA Cutting Room Service, El Paso, TX: February 4, 1999.
TA–W–37,282; Hewlett Packard Co., Vancouver Div., Vancouver, WA: March 20, 2000.
TA–W–37,276; Gatesville Walls Industries, Inc., Gatesville, TX: January 12, 1999.
TA–W–37,398; Kenro, Inc., A Carlisle Co., Fiberglass Div., Fredonia, WI: February 17, 1999.
TA–W–37,270; Charles Industries Ltd, Jasonville, IN: January 11, 1999.
TA–W–37,364 & A; Robinson Mfg Co., Inc., Madisonville, TN and Gruethi-Laager, TN: December 13, 1998.
TA–W–37,275; Walls Industries, Inc., Carthage, MO: January 4, 1999.
TA–W–37,360; GEO Drilling Fluids, Bakersfield, CA: February 7, 1999.
TA–W–37,343 & A; Ro-An Jewelry, Johnston, RI and Carol Pearl Co., Johnston, RI: February 2, 1999.
TA–W–37,358; Epson Portland, Inc., Hillsboro, OR: February 11, 1999.
TA–W–37,266; Tecumseh Products Co., Trenton, TN: January 7, 1999.
TA–W–37,356; U.S. Electrical Motors, Div. of Emerson Electric Co., Philadelphia, PA: January 31, 1999.
TA–W–37,311; Gale River Designs Ltd, Franconia, NH: January 26, 1999.
TA–W–37,231; Laurel Mould, Inc., Jeannette, PA: December 15, 1999.
TA–W–37,223; Linden Apparel, Inc., Allentown, PA: December 22, 1998.
TA–W–37,288; Custom Packaging Systems, Inc., Sewn Bag Dept, Manistee, MI: January 11, 1999.

Also, pursuant to Title V of the North American Free Trade Agreement Implementation Act (Pub. L. 103–182) concerning transitional adjustment assistance hereinafter called (NAFTA–TAA) and in accordance with Section 250(a), Subchapter D, Chapter 2, Title II, of the Trade Act as amended, the Department of Labor presents summaries of determinations regarding eligibility to apply for NAFTA–TAA issued during the month of March, 2000.

In order for an affirmative determination to be made and a certification of eligibility to apply for NAFTA–TAA the following group eligibility requirements of Section 250 of the Trade Act must be met:

(1) That a significant number or proportion of the workers in the workers' firm, or an appropriate subdivision thereof (including workers in any agricultural firm or appropriate subdivision thereof) have become totally or partially separated from employment and either—

(2) That sales or production, or both, of such firm or subdivision have decreased absolutely,

(3) That imports from Mexico or Canada of articles like or directly competitive with articles produced by such firm or subdivision have increased, and that the increases in ports contributed importantly to such workers' separations or threat of separation and to the decline in sales or production of such firm or subdivision; or

(4) That there has been a shift in production by such workers' firm or subdivision to Mexico or Canada of articles like or directly competitive with articles which are produced by the firm or subdivision.

Negative Determinations NAFTA–TAA

In each of the following cases the investigation revealed that criteria (3) and (4) were not met. Imports from Canada or Mexico did not contribute importantly to workers' separations. There was no shift in production from the subject firm to Canada or Mexico during the relevant period.

NAFTA–TAA–03704; Linden Apparel, Inc., Allentown, PA
NAFTA–TAA–03775; Award Windows, Inc., Ferndale, WA
NAFTA–TAA–03668; Barrick Goldstrike, Inc., Elko, NV
NAFTA–TAA–03640; The Boeing Company, Melbourne, AR
NAFTA–TAA–03722; ITT Industries, Jabsco, Springfield, OH
NAFTA–TAA–03653; Goss Graphics Systems, Inc., Wyomissing, PA
NAFTA–TAA–03729; American Sewn Products, Bremerton, WA
NAFTA–TAA–03676; BICC General, Williamstown, MA
NAFTA–TAA–03621, Tempset, Inc., St. Louis, MO

The investigation revealed that the criteria for eligibility have not been met for the reasons specified.

NAFTA–TAA–3740; Preston Trucking Co., Pittsburgh, PA
NAFTA–TAA–03724; KeyBank USA, Retail Recovery and Collection Dept., Albany, NY
NAFTA–TAA–03688; Motor Coils Manufacturing, Emporium, PA
NAFTA–TAA–03735; Corporate Expressions Group, Ltd, Salisbury, NC
NAFTA–TAA–03579; North Star Steel Kentucky, Inc., Calvert City, KY
NAFTA–TAA–03714; Eastman Kodak Co., US & Canada Region Customer Order Services Operations, Rochester, NY
NAFTA–TAA–03756; Vermont Castings Majestic Products Co., Huntington, IN
NAFTA–TAA–03786; Royal Bank of Canada, Credit Administration, New York, NY

The investigation revealed that workers of the subject firm did not produce an article within the meaning of Section 250(a) of the Trade Act, as amended.

Affirmative Determinations NAFTA–TAA

NAFTA–TAA–03637; Laurel Mould, Inc., Jeannette, PA: December 15, 1998.
NAFTA–TAA–03349; New Tees Manufacturing, Greeleyville, SC: July 27, 1998.
NAFTA–TAA–03768; Donaldson Co., Inc., Oelwein, IA: January 18, 1999.
NAFTA–TAA–03674; Florence Eiseman, Milwaukee, WI: January 18, 1999.
NAFTA–TAA–03682; Colorado Greenhouse, Estancia, NM: January 19, 1999.
NAFTA–TAA–03778; Caretek, Inc., Denver, CO: February 28, 1999.
NAFTA–TAA–03728; Sullivan Die Casting, Inc., Kenilworth, NJ: February 9, 1999.
NAFTA–TAA–03717; Mitec Wireless, Inc., Tinton Falls, NJ: January 21, 1999.
NAFTA–TAA–03661; Fasco Motors, Eldon, MO: January 3, 1999.
NAFTA–TAA–03706; Danskin, Inc., York, PA: February 1, 1999.
NAFTA–TAA–03744; Kenro, Inc., A Carlisle Co., Fiberglass Div., Fredonia, WI: February 21, 1999.
NAFTA–TAA–03687; Hewlett Packard Co., Vancouver Div., Vancouver, WA: March 20, 2000.
NAFTA–TAA–03746; Brunswick Bicycles, Olney, IL: February 28, 1999.
NAFTA–TAA–03701; Monterey, Inc., The Mill and Consumer Products Div., Janesville, WI: January 25, 1999.
NAFTA–TAA–03379; Sun Country Industries, Albuquerque, NM: August 5, 1998.
NAFTA–TAA–03662; Gatesville Walls Industries, Inc., Gatesville, TX: January 12, 1999.
NAFTA–TAA–03699; Griffin Pipe Products Co., Lynchburg, VA: January 31, 1999.
NAFTA–TAA–03752; Epson Portland, Inc., Hillsboro, OR: February 22, 1999.

NAFTA–TAA–03696; North Carolina Embroidery Co., High Point, NC: January 28, 1999.

NAFTA–TAA–03707; Custom Packaging Systems, Inc., Sewn Bag Dept., Manistee, MI: January 11, 1999.

NAFTA–TAA–03663; Walls Industries, Inc., Carthage, MO: January 4, 1999.

I hereby certify that the aforementioned determinations were issued during the month of March, 2000. Copies of these determinations are available for inspection in Room C–4318, U.S. Department of Labor, 200 Constitution Avenue, NW, Washington, DC 20210 during normal business hours or will be mailed to persons who write to the above address.

Dated: March 23, 2000.

Grant D. Beale,

Program Manager, Division of Trade Adjustment Assistance.

[FR Doc. 00–7981 Filed 3–30–00; 8:45 am]

BILLING CODE 4510–30–M

DEPARTMENT OF LABOR

Employment and Training Administration

[Docket No. TA–W–37,330]

Cadillac Curtain Corp. Dyer, Tennessee; Notice of Termination of Investigation

Pursuant to Section 221 of the Trade Act of 1974, an investigation was initiated on February 14, 2000, in response to a worker petition which was filed on the same date on behalf of workers at Cadillac Curtain Corp., Dyer, Tennessee.

The petitioner has requested that the petition be withdrawn. Consequently, further investigation in this case would serve no purpose, and the investigation has been terminated.

Signed in Washington, D.C. this 20th day of March, 2000.

Grant D. Beale,

Program Manager, Division of Trade Adjustment Assistance.

[FR Doc. 00–7979 Filed 3–30–00; 8:45 am]

BILLING CODE 4510–30–M

DEPARTMENT OF LABOR

Employment and Training Administration

Investigations Regarding Certifications of Eligibility To Apply for Worker Adjustment Assistance

Petitions have been filed with the Secretary of Labor under Section 221(a) of the Trade Act of 1974 (''the Act'') and are identified in the Appendix to this notice. Upon receipt of these petitions, the Director of the Division of Trade Adjustment Assistance, Employment and Training Administration, has instituted investigations pursuant to Section 221(a) of the Act.

The purpose of each of the investigations is to determine whether the workers are eligible to apply for adjustment assistance under Title II, Chapter 2, of the Act. The investigations will further relate, as appropriate, to the determination of the date on which total or partial separations began or threatened to begin and the subdivision of the firm involved.

The petitioners or any other persons showing a substantial interest in the subject matter of the investigations may request a public hearing, provided such request is filed in writing with the Director, Division of Trade Adjustment Assistance, at the address show below, not later than April 10, 2000.

Interested persons are invited to submit written comments regarding the subject matter of the investigations to the Director, Division of Trade Adjustment Assistance, at the address shown below, not later than April 10, 2000.

The petitions filed in this case are available for inspection at the Office of the Director, Division of Trade Adjustment Assistance, Employment and Training Administration, U.S. Department of Labor, 200 Constitution Avenue, NW, Washington, DC 20210.

Signed at Washington, DC this 13th day of March, 2000.

Grant D. Beale,

Program Manager, Division of Trade Adjustment Assistance.

Appendix

PETITIONS INSTITUTED ON 03/13/2000

TA–W	Subject firm (petitioners)	Location	Date of petition	Product(s)
37,438	Georgia Pacific (PACE)	Woodland, ME	03/01/2000	Panels.
37,439	National Ceramics (Wkrs)	Cunningham, KY	02/28/2000	Lamp Shades and Vases.
37,440	Terry Products, Inc (Wkrs)	Kannapolis, NC	03/02/2000	Infant and Children's Sleepers.
37,441	Kobe Precision, Inc (Wkrs)	Hayward, CA	02/23/2000	Aluminum Substrates.
37,442	Cannon Knits (Wrks)	Andrews, SC	02/29/2000	Tee Shirts.
37,443	Jerzees Activewear (Co.)	Geneva, AL	02/25/2000	Knit Apparel.
37,444	Kobratech Design (Wkrs)	N. Canton, OH	02/27/2000	Tire Model Makers.
37,445	Gorham—Lenox (Co.)	Smithfield, RI	02/29/2000	Stainless Steel Place Settings.
37,446	Mulay Plastics, Inc (Wkrs)	Casa Grande, AZ	02/29/2000	Cabinetry for Computer Monitors.
37,447	Powerex, Inc (co.)	Youngwood, PA	02/15/2000	Semiconductors.
37,448	Regal Ware (Co.)	Jacksonville, AR	02/23/2000	Aluminum Cookware.
37,449	New River Apparel (Wkrs)	Fries, VA	02/28/2000	Shirts, Pants, Sweatshirts, Jackets.
37,450	Xomox Corporation (Co.)	Cincinnati, OH	03/03/2000	Ball Valves.
37,451	Cross Creek Apparel (Co.)	Mount Airy, NC	02/21/2000	Knit Shirts, Pants.
37,452	EZA Technology (Co.)	Conyers, GA	02/28/2000	Computer Cases.
37,453	Jantzen, Inc (Co.)	Seneca, SC	02/29/2000	Warehoused & Cut Apparel Fabric.
37,454	Corson Manufacturing Co (Wkrs)	Lockport, NY	03/01/2000	Folding Cartons.
37,455	McCain Foods USA (Co.)	Burley, ID	02/05/2000	Frozen French Fries.
37,456	General Electric Services (UE)	Ontario, CA	03/05/2000	Overall & Repair Jet Engines.
37,457	Best Manufacturing Co (Co.)	Johnson City, TN	03/06/2000	Synthetic Disposable Gloves.
37,458	Williston Manufacturing (Co.)	Williston, SC	01/21/2000	Girl's & Boy's Shorts, Tops.
37,459	Rohm and Haas Co. (IUOE)	Philadelphia, PA	03/03/2000	Ion Exchange Resins.
37,460	Mr. Louis Manufacturing (Wkrs)	Hialeah, FL	03/03/2000	Ladies' Jackets.
37,461	Epic Components Co (Co.)	New Boston, MI	02/23/2000	Plastic Automobile Components.
37,462	Brandon Manufacturing (Co.)	Shreveport, LA	02/16/2000	Metal Parts for Electrical Switches.
37,463	LaCrosse Footwear, Inc (USWA)	LaCrosse, Wi	02/24/2000	Rubber Footwear.
37,464	Republic Supply Co (Wkrs)	Sidney, MT	02/28/2000	Oil Pipe Fittings.

PETITIONS INSTITUTED ON 03/13/2000—Continued

TA–W	Subject firm (petitioners)	Location	Date of petition	Product(s)
37,465	Quaker Oats Co. (BCTGM)	Shiremanstown, PA	02/27/2000	Cereals and Granola Bars.
37,466	Rochester Button Co. (Co.)	Kenbridge, VA	03/01/2000	Polyester Buttons.
37,467	Hartz and Co., Inc. (UNITE)	Baltimore, MD	03/06/2000	Men's Suits, Trousers and Sport and Coats.
37,468	Great American Knitting (Co.)	Pottstown, PA	03/06/2000	Men's Gold Toe Socks.
37,469	Sherwood Market House (UNITE)	Alliance, OH	03/06/2000	Ladies' Coats.

[FR Doc. 00–7983 Filed 3–30–00; 8:45 am]

BILLING CODE 4510–30–M

DEPARTMENT OF LABOR

Employment and Training Administration

[TA–W–36,804]

Key Manufacturing Co., Jasper, AL; Dismissal of Application for Reconsideration

Pursuant to 29 CFR 90.18(C) an application for administrative reconsideration was filed with the Director of the Division of Trade Adjustment Assistance for workers at the Key Manufacturing Co., Jasper, Alabama. The application contained no new substantial information which would bear importantly on the Department's determination. Therefore, dismissal of the application was issued.

TA–W–36,804; Key Manufacturing Co., Jasper, Alabama (January 5, 2000)

Signed at Washington, DC this 23rd day of March, 2000.

Grant D. Beale,

Program Manager, Division of Trade Adjustment Assistance.

[FR Doc. 00–7980 Filed 3–30–00; 8:45 am]

BILLING CODE 4510–30–M

DEPARTMENT OF LABOR

Employment and Training Administration

Solicitation for Grant Applications (SGA) Job Training Partnership Act, Title III–B: Skills Shortages, Partnership Training/System Building Demonstration Program

AGENCY: Employment and Training Administration (ETA), Labor.

ACTION: Notice of extension of closing date.

SUMMARY: The Employment and Training Administration published a document in the **Federal Register** of February 28, 2000 (65 FR 10547), concerning the availability of grant funds to respond to employers' identified skills shortages through the establishment or strengthening of regional consortia. The document's closing date is being extended.

FOR FURTHER INFORMATION CONTACT: B. Jai Johnson, Grants Management Specialist, Division of Federal Assistance, Fax (202) 219–8739.

Date Extension

In the **Federal Register** of February 28, 2000, in FR Doc. 00–4580, on page 10548, in the second column, correct the **DATES** caption to read:

DATES: The closing date for receipt of the application is Wednesday, April 19, 2000 at 4:00 p.m. (Eastern Time) at the address listed.

Dated: March 27, 2000.

Laura Cesario,

Grant Officer,

[FR Doc. 00–8015 Filed 3–30–00; 8:45 am]

BILLING CODE 4510–30–M

DEPARTMENT OF LABOR

Employment and Training Administration

[NAFTA–3711]

Cadillac Curtain Corp., Dyer, Tennessee; Notice of Termination of Investigation

Pursuant to Section 221 of the Trade Act of 1974, an investigation was initiated on February 7, 2000, in response to a worker petition which was filed by a company official on behalf its workers at Cadillac Curtain Corp., Dyer, Tennessee.

The petitioner has requested that the petition be withdrawn. Consequently further investigation in this case would serve no purpose, and the investigation has been terminated.

Signed in Washington, DC this 20th day of March, 2000.

Grant D. Beale,

Program Manager, Division of Trade Adjustment Assistance.

[FR Doc. 00–7984 Filed 3–30–00; 8:45 am]

BILLING CODE 4510–30–M

DEPARTMENT OF LABOR

Employment Standards Administration

Wage and Hour Division; Minimum Wages for Federal and Federally Assisted Construction; General Wage Determination Decisions

General wage determination decisions of the Secretary of Labor are issued in accordance with applicable law and are based on the information obtained by the Department of Labor from its study of local wage conditions and data made available from other sources. They specify the basic hourly wage rates and fringe benefits which are determined to be prevailing for the described classes of laborers and mechanics employed on construction projects of a similar character and in the localities specified therein.

The determinations in these decisions of prevailing rates and fringe benefits have been made in accordance with 29 CFR Part 1, by authority of the Secretary of Labor pursuant to the provisions of the Davis-Bacon Act of March 3, 1931, as amended (46 Stat. 1494, as amended, 40 U.S.C. 276a) and of other Federal statutes referred to in 29 CFR Part 1, Appendix, as well as such additional statutes as may from time to time be enacted containing provisions for the payment of wages determined to be prevailing by the Secretary of Labor in accordance with the Davis-Bacon Act. The prevailing rates and fringe benefits determined in these decisions shall, in accordance with the provisions of the foregoing statutes, constitute the minimum wages payable on Federal and federally assisted construction projects to laborers and mechanics of the specified classes engaged on contract work of the character and in the localities described therein.

Good cause is hereby found for not utilizing notice and public comment procedure thereon prior to the issuance of these determinations as prescribed in 5 U.S.C. 553 and not providing for delay in the effective date as prescribed in that section, because the necessity to issue current construction industry wage determinations frequently and in large

volume causes procedures to be impractical and contrary to the public interest.

General wage determination decisions, and modifications and supersedes decisions thereto, contain no expiration dates and are effective from their date of notice in the **Federal Register**, or on the date written notice is received by the agency, whichever is earlier. These decisions are to be used in accordance with the provisions of 29 CFR Parts 1 and 5. Accordingly, the applicable decision, together with any modifications issued, must be made a part of every contract for performance of the described work within the geographic area indicated as required by an applicable Federal prevailing wage law and 29 CFR Part 5. The wage rates and fringe benefits, notice of which is published herein, and which are contained in the Government Printing Office (GPO) document entitled ''General Wage Determinations Issued Under The Davis-Bacon And Related Acts,'' shall be the minimum paid by contractors and subcontractors to laborers and mechanics.

Any person, organization, or governmental agency having an interest in the rates determined as prevailing is encouraged to submit wage rate and fringe benefit information for consideration by the Department. Further information and self-explanatory forms for the purpose of submitting this data may be obtained by writing to the U.S. Department of Labor, Employment Standards Administration, Wage and Hour Division, Division of Wage Determinations, 200 Constitution Avenue, N.W., Room S–3014, Washington, D.C. 20210.

Withdrawn General Wage Determination Decisions

This is to advise all interest parties that the Department of Labor is withdrawing, from the date of this notice, the following General Wage Determinations:

IA000045—See IA000040
IA000053—See IA000015
IA000056—See IA000036
IA000060—See IA000040
ND000033—See ND000031
ND000035—See ND000031
ND000036—See ND000031
ND000037—See ND000031
ND000038—See ND000031
ND000039—See ND000031
ND000040—See ND000031
ND000042—See ND000031
ND000043—See ND000031
ND000044—See ND000031
ND000045—See ND000031
ND000046—See ND000031
ND000048—See ND000031

Contracts for which bids have been opened shall not be affected by this notice. Also, consistent with 29 CFR 1.6(c)(2)(i)(A), when the opening of bids is less than ten (10) days from the date of this notice, this action shall be effected unless the agency finds that there is insufficient time to notify bidders of the change and the finding is documented in the contract file.

Modifications to General Wage Determination Decisions

The number of decisions listed in the Government Printing Office document entitled ''General Wage Determinations Issued Under the Davis-Bacon and Related Acts'' being modified are listed by Volume and State. Dates of publication in the **Federal Register** are in parentheses following the decisions being modified.

Volume I

None

Volume II

None

Volume III

None

Volume IV

Michigan
MI000003 (Feb. 11, 2000)
MI000030 (Feb. 11, 2000)
MI000034 (Feb. 11, 2000)
MI000063 (Feb. 11, 2000)
MI000068 (Feb. 11, 2000)
MI000069 (Feb. 11, 2000)
MI000073 (Feb. 11, 2000)
MI000077 (Feb. 11, 2000)
MI000004 (Feb. 11, 2000)
Wisconsin
WI000004 (Feb. 11, 2000)

Volume V

Iowa
IA000007 (Feb. 11, 2000)
IA000012 (Feb. 11, 2000)
IA000015 (Feb. 11, 2000)
IA000036 (Feb. 11, 2000)
IA000040 (Feb. 11, 2000)

Volume VI

North Dakota
ND000031 (Feb. 11, 2000)
ND000041 (Feb. 11, 2000)
Oregon
OR000001 (Feb. 11, 2000)
OR000004 (Feb. 11, 2000)
OR000017 (Feb. 11, 2000)
Washington
WA000001 (Feb. 11, 2000)
WA000002 (Feb. 11, 2000)
WA000003 (Feb. 11, 2000)
WA000006 (Feb. 11, 2000)
WA000007 (Feb. 11, 2000)
WA000010 (Feb. 11, 2000)
WA000013 (Feb. 11, 2000)

Volume VIII

California
CA000028 (Feb. 11, 2000)

General Wage Determination Publication

General wage determinations issued under the Davis-Bacon and related Acts, including those noted above, may be found in the Government Printing Office (GPO) document entitled ''General Wage Determinations Issued Under The Davis-Bacon and Related Acts.'' This publication is available at each of the 50 Regional Government Depository Libraries and many of the 1,400 Government Depository Libraries across the country.

The general wage determinations issued under the Davis-Bacon and related Acts are available electronically by subscription to the FedWorld Bulletin Board System of the National Technical Information Service (NTIS) of the U.S. Department of Commerce at 1–800–363–2068

Hard-copy subscriptions may be purchased from: Superintendent of Documents, U.S. Government Printing Office, Washington, D.C. 20402, (202) 512–1800.

When ordering hard-copy subscription(s), be sure to specify the State(s) of interest, since subscriptions may be ordered for any or all of the seven separate volumes, arranged by State. Subscriptions include an annual edition (issued in January or February) which includes all current general wage determinations for the States covered by each volume. Throughout the remainder of the year, regular weekly updates are distributed to subscribers.

Signed at Washington, D.C. this 23rd day of March 2000.

John Frank,

Acting Chief, Branch of Construction Wage Determinations.

[FR Doc. 00–7724 Filed 3–30–00; 8:45 am]

BILLING CODE 4510–27–M

DEPARTMENT OF LABOR

Occupational Safety and Health Administration

Susan Harwood Training Grant Program

AGENCY: Occupational Safety and Health Administration (OSHA), Labor.

ACTION: Notice of availability of funds and request for grant applications.

SUMMARY: The Occupational Safety and Health Administration (OSHA) awards funds to nonprofit organizations to conduct safety and health training and education in the workplace. This notice announces grant availability for two different types of Susan Harwood Training Grants. Strategic Plan Grants

support training in occupational safety and health programs for several different industries targeted in OSHA's Strategic Plan. Institutional Competency Building Grants assist organizations to develop their occupational safety and health training, education and related assistance capacity over a three-to-five year competency building period. The two types of grants are described below.

1. Strategic Plan Grants

Grants are available for training in safety and health programs for several industries targeted in OSHA's Strategic Plan. The targeted industries for this year's competition are: construction, including residential construction; food processing (SIC 20); and nursing homes (SIC 8051/8052).

These grants are awarded for a 12-month period. If first year performance is satisfactory and funds are available, grants will be renewed for an additional twelve-month period. There is approximately $2.7 million available for Strategic Plan Grants. The average Federal award will be $150,000. A non-Federal matching share of 20% is required.

2. Institutional Competency Building Grants

Grants are available to nonprofit organizations to assist them in developing and/or expanding their safety and health training, education and related assistance capacity over a three-to-five year competency building period. To be eligible to apply for this grant program, organizations must serve clients nationally or in multi-state areas, and provide or plan to provide safety and health training, education and services to their clients. Preference will be given to organizations that propose to reach and serve one or more categories of workers within the target audience. The target audience includes vulnerable workers, small business employers and employees, and workers who are employed in high hazard industries and in industries affected by new OSHA standards. Organizations will be expected to institutionalize safety and health training, education, and related assistance in their organization in order to assist these workers on an ongoing basis.

Institutional Competency Building Grants will be awarded for up to five years. Annual funding will be dependent on satisfactory performance and the availability of funds. There is approximately $3 million available for this program and an average Federal award will be $250,000. A minimum non-Federal matching share of 10% is required for the first year of the grant. The required non-Federal matching share will be increased by 5% each subsequent year of the grant.

The notice describes the scope of the grant program and provides information about how to get detailed grant application instructions. Applications should not be submitted without the applicant first obtaining the detailed grant application instructions mentioned later in the notice. Separate grant applications must be submitted by organizations interested in applying for more than one grant topic or type of grant.

Section 21(c) of the Occupational Safety and Health Act of 1970 (29 U.S.C. 670) authorizes this program.

DATES: Applications must be received by May 19, 2000.

ADDRESSES: Submit grant applications to the OSHA Office of Training and Education, Division of Training and Educational Programs, 1555 Times Drive, Des Plaines, Illinois 60018.

FOR FURTHER INFORMATION CONTACT: Ronald Mouw, Chief, Division of Training and Educational Programs, or Cynthia Bencheck, Program Analyst, OSHA Office of Training and Education, 1555 Times Drive, Des Plaines, Illinois 60018, telephone (847) 297–4810, e-mail cindy.bencheck@osha.gov.

SUPPLEMENTARY INFORMATION:

What Is the Purpose of the Harwood Training Grant Program?

OSHA's Strategic Plan contains strategic goals to improve workplace safety and health for all workers, change the workplace culture to increase employer and worker awareness of, commitment to, and involvement in safety and health, and to secure public confidence through excellence in the development and delivery of OSHA's programs and services. OSHA's intent is to reduce the number of worker injuries, illnesses and fatalities by focusing nationwide attention and Agency resources on the most prevalent types of workplace injuries and illnesses, the most hazardous industries, and the most hazardous workplaces. The Susan Harwood Training Grants Program is one of the mechanisms OSHA is using to achieve its strategic goals.

Information about OSHA's Strategic Plan is available on OSHA's *web site at www.osha.gov* in the About OSHA category. OSHA has selected Food Processing, Nursing Homes, Logging, Shipyards and Construction as the five industries it will focus its attention on during the performance period of the Strategic Plan. The three injuries/illnesses OSHA has targeted for reduction are amputations, lead exposures, and silica exposures.

Susan Harwood Training Grants provide funds to train workers and employers to recognize, avoid, and prevent safety and health hazards in their workplaces. The program emphasizes three areas.

- Educating workers and employers in small businesses. A small business has 250 or fewer workers.
- Training workers and employers about new OSHA standards.
- Training workers and employers about high risk activities or hazards identified by OSHA through its Strategic Plan, or as part of an OSHA special emphasis program.

Grantees are expected to provide occupational safety and health services, develop safety and health training and/or educational programs, recruit workers and employers for the training, and conduct the training. Grantees are also expected to follow up with people trained by their program to determine what, if any, changes were made to reduce hazards in their workplaces as a result of the training.

What Are the Two Grant Categories This Year?

1. Strategic Plan Grants.
2. Institutional Competency Building Grants.

What Are the Training Topics for the Strategic Plan Grants?

Grant funds are available for Strategic Plan Grants to fund training addressing hazards in three industries. The three selected industries were chosen based on injuries and illnesses as identified in OSHA's Strategic Plan. Each grant application must address one of the following areas.

1. Construction, including residential construction. Programs that train workers and employers in the recognition and avoidance of construction hazards, especially those most frequently involved in construction fatalities (falls, struck-by, crushed-by, and electrocutions and electrical injuries). Applications that propose training and education programs addressing ergonomic hazards and abatement for the construction industry will also be eligible for consideration.

2. Food Processing, Standard Industrial Code (SIC) 20. Programs that train workers and employers in the recognition and prevention of safety and health hazards in the food processing industry. Preference will be given to programs that target workers in the food processing operations of canning, packaging, freezing, and chopping

produce (SIC 203), bakery products (SIC 205) and beverages (SIC 208).

3. Nursing Homes, Standard Industrial Code (SIC) 8051/8052. Programs that train workers and employers in the recognition and prevention of safety and health hazards in nursing homes, especially ergonomic hazards.

What Are the Requirements for the Institutional Competency Building Grants?

Nonprofit organizations that serve clients nationally or in multi-state areas and provide or plan to provide safety and health training, education and services may apply for these competency building grants. Preference will be given to organizations that can reach and serve one or more categories of workers within the target audience. The target audience includes vulnerable workers, small business employers and employees, and workers who are employed in high hazard industries and in industries affected by new OSHA standards.

Institutional Competency Building Grants may be funded for project periods of up to five years. Grant applicants must indicate the number of years, typically three-to-five, needed to fully integrate safety and health services into their organizations. Grantee organizations will be expected to establish or expand the occupational safety and health training, education and related assistance they provide to their clients. Grantees will be expected to follow up with people trained by their program to determine what, if any, changes were made to reduce hazards in their workplaces as a result of the training. Organizations also will be expected to institutionalize safety and health training, education and related services in their organizations in order to assist workers on an ongoing basis and to ensure that the services will continue after the grant ends.

Grant applicants must provide a detailed budget and workplan describing planned activities for the first year of their competency building grant. A summary plan outlining the future development of their safety and health program must be provided as a part of the original application. The summary plan must clearly indicate the number of years, typically three-to-five, the organization will require grant funds in order to institutionalize safety and health services into its organization as well as proposed grant goals and activities for each year. To be eligible to apply, organization must meet the following criteria.

- Organizations must be nonprofit and serve workers nationally or in multi-state areas.
- Organizations must provide or plan to provide safety and health training, education and services to workers. Preference will be given to organizations that propose to reach and serve workers from one or more of the following groups.

a. Vulnerable workers: entry-level workers, immigrants, migrants, non-English speaking workers, illiterate workers, and recently employed inner city youth.

b. Small business employers and employees. A small business has 250 or fewer workers.

c. Workers who are employed in jobs with high risk activities or hazards or who are affected by new OSHA standards.

Applicants may propose safety and health topics for their programs that will meet the needs of their target audience. However, preference will be given to applicants that propose programs addressing one or more of OSHA's Strategic Plan topics, or other agency priorities, such as ergonomics.

Organizations should develop relationships with OSHA Area Offices, Committees on Occupational Safety and Health (COSH), and other appropriate agencies that can assist workers with safety and health problems. Applicants should describe how they will reach their target audience, their expertise in serving that audience, and how they will tailor their programs to meet the needs of their workers. Organizations should also tell us how they plan to conduct a follow-up evaluation with people trained by their program to determine what, if any, changes were made to reduce hazards in their workplaces as a result of the training.

Who Is Eligible To Apply for a Grant?

Any nonprofit organization is eligible to apply. State or local government supported institutions of higher education are eligible to apply in accordance with 29 CFR 97.4(a)(1).

Applicants other than State or local government supported institutions of higher education will be required to submit evidence of nonprofit status, preferably from the Internal Revenue Service (IRS).

What Can Grant Funds Be Spent On?

Grant funds can be spent on the following.

- Conducting training.
- Conducting other activities that reach and inform workers and employers about occupational safety and health hazards and hazard abatement.
- Developing educational materials for use in the training.

Are There Restrictions on How Grant Funds Can Be Spent?

OSHA will not provide funding for the following activities.

1. Any activity that is inconsistent with the goals and objectives of the Occupational Safety and Health Act of 1970.

2. Training involving workplaces that are not covered by the Occupational Safety and Health Act. Examples include State and local government workers in non-State Plan States and workers covered by section 4(b)(1) of the Act.

3. Production, publication, reproduction or use of training and educational materials, including newsletters and instructional programs, that have not been reviewed by OSHA for technical accuracy.

4. Activities that address issues other than recognition, avoidance, and prevention of unsafe or unhealthy working conditions. Examples include workers' compensation, first aid, and publication of materials prejudicial to labor or management.

5. Activities that provide assistance to workers in arbitration cases or other actions against employers, or that provide assistance to employers and/or workers in the prosecution of claims against Federal, State or local governments.

6. Activities that directly duplicate services offered by OSHA, a State under an OSHA-approved State Plan, or consultation programs provided by State designated agencies under section 21(d) of the Occupational Safety and Health Act.

7. Activities intended to generate membership in the grantee's organization. This includes activities to acquaint nonmembers with the benefits of membership, inclusion of membership appeals in materials produced with grant funds, and membership drives.

What Other Grant Requirements Are There?

1. OSHA review of educational materials. OSHA will review all educational materials produced by the grantee for technical accuracy during development and before final publication. OSHA will also review training curricula and purchased training materials for accuracy before they are used.

When grant recipients produce training materials, they must provide

copies of completed materials to OSHA before the end of the grant period. OSHA has a lending program that circulates grant-produced audiovisual materials. Audiovisual materials produced by the grantee as a part of its grant program will be included in this lending program. In addition, all materials produced by grantees may be placed on the Internet by OSHA.

2. OMB and regulatory requirements. Grantees are required to comply with the following documents.

• 29 CFR part 95, which covers grant requirements for nonprofit organizations, including universities and hospitals. These are the Department of Labor regulations implementing OMB Circular A–110.

• OMB Circular A–21, which describes allowable and unallowable costs for educational institutions.

• OMB Circular A–122, which describes allowable and unallowable costs for other nonprofit organizations.

• OMB Circular A–133, which provides information about audit requirements.

3. Certifications. All applicants are required to certify to a drug-free workplace in accordance with 29 CFR part 98, to comply with the New Restrictions on Lobbying published at 29 CFR part 93, to make a certification regarding the debarment rules at 29 CFR part 98, and to complete a special lobbying certification.

4. Matching share. The program requires the grantee to provide a matching share of funds. The matching share requirements are different for the two grant programs being announced. The requirements are listed below.

• *Strategic Plan Grants.* Grant recipients must provide a minimum of 20% of the total grant budget. This matching share may be in-kind, rather than a cash contribution, or a combination of cash and in-kind. For example, if the Federal share of the grant is $80,000 (80% of the grant), then the matching share will be $20,000 (20% of the grant), for a total grant of $100,000. The matching share may exceed 20%.

• *Institutional Competency Building Grants.* Grant recipients must provide a minimum of 10% of the total grant budget in the first year of the grant. This matching share may be in-kind, rather than a cash contribution, or a combination of cash and in-kind. For example, if the Federal share of the grant is $180,000 (90% of the grant), then the matching share will be $20,000 (10% of the grant), for a total grant of $200,000. The first year matching share may exceed 10%.

Grant recipients will be required to increase their non-Federal matching share by at least 5% each subsequent year of the grant. Competency building grant funding will be provided for up to five years. For example, if the grant recipient requests three years for a competency building grant, the non-Federal matching share minimum is 10% the first year, 15% the second year, and 20% the third year of the grant.

5. Other. In compliance with the President's Executive Orders 12876, 12900, 12928, and 13021, the grantee is strongly encouraged to provide subgranting opportunities to Historically Black Colleges and Universities, Hispanic Serving Institutions and Tribal Colleges and Universities.

How Are Applications Reviewed and Rated?

OSHA staff will review grant applications and present the results to the Assistant Secretary who will make the selection of organizations to be awarded grants.

OSHA will give preference to applications that:

• Address multiple safety and health subjects. For example, an application for a Strategic Plan Grant for the food processing target which stresses ergonomic issues as well as other safety and health issues that affect food processing workers would be preferred over one that only addresses ergonomic issues.

• Plan to conduct train-the-trainer programs and gather data concerning the courses and the number of students trained by the new trainers as a part of their grant.

• Train managers and/or supervisors in addition to workers.

• Serve multiple employers. OSHA is interested in reaching more than one employer with each grant awarded.

The following factors will be considered in evaluating grant applications.

1. Program Design

For Strategic Plan Grants

a. The proposed training and education program addresses one of the following topics.

i. Safety and health hazards in construction, including residential construction, especially programs focusing on the four leading causes of fatalities (falls, struck-by, crushed-by, and electrocutions and electrical injuries). Applications proposing training and education programs addressing ergonomic hazards and abatement for the construction industry will also be eligible for consideration.

ii. Safety and health hazards in food processing operations (SIC 20). Preference will be given to programs that target workers and employers in the food processing operations of canning, packaging, freezing, and chopping produce (SIC 203), bakery products (SIC 205), and beverages (SIC 208).

iii. Safety and health hazards in nursing homes (SIC 8051/8052), especially ergonomic hazards.

b. The proposal plans to train workers and/or employers and clearly estimates the numbers to be trained, and clearly identifies the types of workers and employers to be trained.

c. If the proposal contains a train-the-trainer program, the following information must be provided:

—What ongoing support the grantee will provide to new trainers;
—The outline of the course curriculum that will be used by the new trainers to teach their students;
—A schedule of the courses to be conducted by the new trainers;
—The estimated number of students to be trained by these new trainers; and
—A description of how the new trainers will report back to the grantee about their classes and student numbers.

d. The planned activities and training are tailored to the needs and levels of the workers and/or employers to be trained.

e. There is a plan to recruit trainees for the program.

f. If the proposal includes developing educational materials, there is a plan for OSHA to review the materials during development.

g. There is a plan to evaluate the program's effectiveness and impact to determine if the training resulted in workplace change.

h. The planned work can be accomplished in the projected time frames.

i. There is a description of the target population, the hazards that will be addressed, the barriers that have prevented adequate training for the target population, why the program cannot be completed without Federal funds, and why funding sources currently available cannot be used for this purpose.

For Institutional Competency Building Grants

a. The proposed competency building program will provide ongoing safety and health training, education and services. Preference will be given to organizations serving one or more of the following target audiences.

i. Vulnerable workers.

ii. Small business employers and employees.

iii. Workers employed in high hazard industries and in industries affected by new OSHA standards.

b. The application describes the occupational safety and health services and training to be provided and the plan to institutionalize those services into the organization. The first year budget and workplan is detailed and describes planned activities. The summary plan indicates the number of years grant funding will be required to institutionalize safety and health services into the organization and outlines future program goals and activities.

c. Organizations must serve members nationally or in multi-state areas. Information about the geographical area to be served must be provided.

d. The application clearly estimates the numbers of workers and employers to be reached and/or trained, and describes the types of workers and employers to be reached and/or trained.

e. There is a plan to recruit program participants.

f. The planned activities and training are tailored to the needs and levels of the target audience.

g. If the proposal contains a train-the-trainer program, the following information must be provided:

—What ongoing support the grantee will provide to new trainers;
—The outline of the course curriculum that will be used by the new trainers to teach their students;
—A schedule of the courses to be conducted by the new trainers;
—The estimated number of students to be trained by these new trainers; and
—A description of how the new trainers will report back to the grantee about their classes and student numbers.

h. If the proposal includes developing educational materials, there is a plan for OSHA to review the materials during development.

i. There is a plan to evaluate the program's effectiveness and impact to determine if the safety and health services provided resulted in workplace change. This includes a description of the evaluation plan to follow up with trainees to determine the impact the program has had in abating hazards and reducing worker injuries.

j. There is a description of the target population, the hazards that will be addressed, the barriers that have prevented adequate training for the target population, why the program cannot be completed without Federal funds, and why funding sources currently available cannot be used for this purpose.

2. Program Experience

The following elements apply to both types of grants, Strategic Plan Grants and Institutional Competency Building Grants.

a. The organization applying for the grant demonstrates experience with occupational safety and health and/or its ability to develop and institutionalize its safety and health capacity.

b. The organization applying for the grant demonstrates experience training adults in work-related subjects and/or in providing services to its target audience.

c. The staff to be assigned to the project have experience in occupational safety and health, the specific topic chosen, and training adults.

d. The organization applying for the grant demonstrates experience in recruiting, training, and working with the population it proposes to serve under the grant.

3. Administrative Capability

The following elements apply to both types of grants.

a. The applicant organization demonstrates experience managing a variety of programs.

b. The applicant organization has administered, or will work with an organization that has administered, a number of different Federal and/or State grants over the past five years.

c. The application is complete, including forms, budget detail, narrative and workplan, and required attachments.

4. Budget

The following elements apply to both types of grants.

a. The budgeted costs are reasonable.

b. The proposed non-Federal matching share is at least 20% of the total budget for Strategic Plan Grant applications. The proposed non-Federal matching share for the first year is at least 10% of the total budget for Institutional Competency Building Grant applications.

c. The budget complies with Federal cost principles (which can be found in applicable OMB Circulars) and with OSHA budget requirements contained in the grant application instructions.

d. The cost per trainee is less than $500 and the cost per training hour is reasonable.

In addition to the factors listed above, the Assistant Secretary will take other items into consideration, such as the geographical distribution of the grant programs and the coverage of populations at risk.

How Much Money Is Available for Grants?

There is approximately $2.7 million available for the Strategic Plan Grants. The average Federal award will be $150,000.

There is approximately $3 million available for the Institutional Competency Building Grants. The average Federal award will be $250,000. Grants will be awarded annually for competency building programs for periods of up to five years.

How Long Are Grants Awarded For?

1. *Strategic Plan Grants.* Grants are awarded for a twelve-month period. If first year performance is satisfactory and funds are available, grants will be renewed for an additional twelve-month period.

2. *Institutional Competency Building Grants.* This multi-year grant program will fund selected organizations for a period of up to five years in order to assist them in developing their safety and health training, education and related assistance capacity. Annual refunding is dependent on satisfactory performance, the availability of funds, and an increasing non-Federal matching share.

How Do I Get a Grant Application Package?

Grant application instructions may be obtained from the OSHA Office of Training and Education, Division of Training and Educational Programs, 1555 Times Drive, Des Plaines, Illinois 60018. The application instructions are also available at http://www.osha-slc.gov/Training/sharwood/sharwood.html.

When and Where Are Applications To Be Sent?

The application deadline is 4:30 p.m. Central Time, Friday, May 19, 2000.

Applications are to be sent to the Division of Training and Educational Programs, OSHA Office of Training and Education, 1555 Times Drive, Des Plaines, IL 60018. Applications may be sent by fax to (847) 297–6636.

How Will I Be Told if My Application Was Selected?

Organizations selected as grant recipients will be notified by a representative of the Assistant Secretary, usually from an OSHA Regional Office. An applicant whose proposal is not selected will be notified in writing.

Notice that an organization has been selected as a grant recipient does not constitute approval of the grant application as submitted. Before the

actual grant award, OSHA will enter into negotiations concerning such items as program components, funding levels, and administrative systems. If the negotiations do not result in an acceptable submittal, the Assistant Secretary reserves the right to terminate the negotiation and decline to fund the proposal.

Signed at Washington, DC, this 24th day of March 2000.

Charles N. Jeffress,

Assistant Secretary of Labor.

[FR Doc. 00–8021 Filed 3–30–00; 8:45 am]

BILLING CODE 4510–26–P

NUCLEAR REGULATORY COMMISSION

[Docket No. 40–8905]

Quivira Mining Company

AGENCY: Nuclear Regulatory Commission.

ACTION: Notice of receipt of a request from Quivira Mining Company to revise a site-reclamation milestone in License No. SUA–1473 for the Ambrosia Lake, New Mexico, facility and notice of opportunity for a hearing.

SUMMARY: Notice is hereby given that the U.S. Nuclear Regulatory Commission (NRC) has received, by letter dated December 30,1999, a request from Quivira Mining Company to amend License Condition (LC) 40 B(1) of Source Material License SUA–1473 for the Ambrosia Lake, New Mexico, facility. The license amendment request proposes to modify LC 40 B.(1) to change the completion date for placement of the erosion protection to December 31, 2001.

FOR FURTHER INFORMATION CONTACT: Jill Caverly, Office of Nuclear Material Safety and Safeguards, Washington, DC 20555. Telephone (301) 415–6699.

SUPPLEMENTARY INFORMATION: The portion of LC 40 B.(1) with the proposed change would read as follows:

B: Reclamation, to ensure required longevity of the covered tailing and groundwater protection, shall be completed as expeditiously as is reasonably achievable, in accordance with the following target dates for completion:

(1) Placement of erosion protection as part of reclamation to comply with Criterion 6 of Appendix A of 10 CFR Part 40—

For impoundment No. 1—December 31, 2001

For impoundment No. 2, excluding portions used for approved byproduct material disposal—December 31, 2001

Quivira's request to amend LC 40 B.(1) of Source Material License SUA–1473, which describes the proposed changes to the license condition and the reason for the request, is being made available for public inspection at the NRC's Public Document Room at 2120 L Street, NW (Lower Level), Washington, DC 20555.

The NRC hereby provides notice of an opportunity for a hearing on the license amendment under the provisions of 10 CFR Part 2, Subpart L, ''Informal Hearing Procedures for Adjudications in Materials and Operator Licensing Proceedings.'' Pursuant to § 2.1205(a), any person whose interest may be affected by this proceeding may file a request for a hearing. In accordance with § 2.1205(c), a request for hearing must be filed within 30 days of the publication of this notice in the **Federal Register**. The request for a hearing must be filed with the Office of the Secretary, either:

(1) By delivery to the Docketing and Service Branch of the Office of the Secretary at One White Flint North, 11555 Rockville Pike, Rockville, MD 20852; or

(2) By mail or telegram addressed to the Secretary, U.S. Nuclear Regulatory Commission, Washington, DC 20555, Attention: Docketing and Service Branch.

In accordance with 10 CFR 2.1205(e), each request for a hearing must also be served, by delivering it personally or by mail, to:

(1) The applicant, Quivira Mining Company, 6305 Waterford Blvd., Suite 325, Oklahoma City, Oklahoma 73118, Attention: William Paul Goranson; and

(2) The NRC staff, by delivery to the Executive Director for Operations, One White Flint North, 11555 Rockville Pike, Rockville, MD 20852, or by mail addressed to the Executive Director for Operations, U.S. Nuclear Regulatory Commission, Washington, DC 20555.

In addition to meeting other applicable requirements of 10 CFR Part 2 of the NRC's regulations, a request for a hearing filed by a person other than an applicant must describe in detail:

(1) The interest of the requestor in the proceeding;

(2) How that interest may be affected by the results of the proceeding, including the reasons why the requestor should be permitted a hearing, with particular reference to the factors set out in § 2.1205(g);

(3) The requestor's areas of concern about the licensing activity that is the subject matter of the proceeding; and

(4) The circumstances establishing that the request for a hearing is timely in accordance with § 2.1205(c).

The request must also set forth the specific aspect or aspects of the subject matter of the proceeding as to which petitioner wishes a hearing.

In addition, members of the public may provide comments on the subject application within 30 days of the publication of this notice in the **Federal Register**. The comments may be provided to David L. Meyer, Chief, Rules Review and Directives Branch, Division of Freedom of Information and Publications Services, Office of Administration, U.S. Nuclear Regulatory Commission, Washington DC 20555.

Dated at Rockville, Maryland, this 23rd day of March 2000.

For the U.S. Nuclear Regulatory Commission.

Thomas H. Essig,

Chief, Uranium Recovery, and Low-Level Waste Branch, Division of Waste Management, Office of Nuclear Material Safety and Safeguards.

[FR Doc. 00–7966 Filed 3–30–00; 8:45 am]

BILLING CODE 7590–01–P

NUCLEAR REGULATORY COMMISSION

[Docket No. 040–06394]

Consideration of Amendment Request for Decommissioning of Department of the Army , U.S. Army Research Laboratory, Depleted Uranium Study Area of the Transonic Range, Aberdeen Proving Ground, Maryland, and Opportunity for a Hearing

AGENCY: Nuclear Regulatory Commission.

ACTION: Notice of consideration of amendment request for decommissioning of Department of the Army, U.S. Army Research Laboratory, Depleted Uranium Study Area of the Transonic Range, Aberdeen Proving Ground, Maryland, and Opportunity for a Hearing.

The U.S. Nuclear Regulatory Commission is considering issuance of an amendment to Source Material License No. SMB–141 (SMB–141), issued to the Department of the Army, U.S. Army Research Laboratory, Aberdeen Proving Ground (the licensee), to authorize decommissioning of the Depleted Uranium Study Area (DUSA) of the Transonic Range at their facility in Aberdeen Proving Ground, Maryland.

On December 15, 1999, the licensee submitted a Decommissioning Plan for the DUSA that summarized the decommissioning activities that will be undertaken to remediate the structures and areas of the surrounding soil at

Aberdeen Proving Ground. Some remaining structures and some areas of soil are contaminated with depleted uranium (DU) resulting from licensed operations conducted during the period 1973 to 1979.

The NRC will require the licensee to remediate the DUSA to meet NRC's decommissioning criteria, and during the decommissioning activities, to maintain effluents and doses within NRC requirements and as low as reasonably achievable.

Prior to approving the decommissioning plan, the NRC will have made findings required by the Atomic Energy Act of 1954, as amended, and NRC's regulations. Approval of the Decommissioning Plan for the DUSA will be documented in an amendment to License No. SMB–141.

The NRC hereby provides notice that this is a proceeding on an application for amendment of a license falling within the scope of Subpart L ''Informal Hearing Procedures for Adjudication in Materials Licensing Proceedings,'' of NRC's rules and practice for domestic licensing proceedings in 10 CFR Part 2. Pursuant to 10 CFR 2.1205(a), any person whose interest may be affected by this proceeding may file a request for a hearing in accordance with 10 CFR 2.1205(c). A request for a hearing must be filed within thirty (30) days of the date of publication of the **Federal Register** Notice.

The request for the hearing must be filed with the Office of the Secretary either:

1. By delivery to the Docketing and Service Branch of the Secretary at One White Flint North, 11555 Rockville Pike, Rockville, MD 20852–2738; or

2. By mail or telegram addressed to the Secretary, U.S. Nuclear Regulatory Commission, Washington, DC 20555. Attention: Docketing and Service Branch.

In addition to meeting other applicable requirements of 10 CFR part 2 of the NRC's regulations, a request for a hearing filed by a person other than an applicant must describe in detail:

1. The interest of the requester in the proceeding;

2. How that interest may be affected by the results of the proceeding, including the reasons why the requester should be permitted a hearing, with particular reference to the factors set out in 10 CFR 2.1205(g);

3. The requesters areas of concern about the licensing activity that is the subject matter of the proceeding; and

4. The circumstances establishing that the request for a hearing is timely in accordance with 10 CFR 2.1205(c).

In accordance with 10 CFR 2.1205(e), each request for a hearing must also be served, by delivering it personally or by mail, to:

1. The applicant, Department of the Army, U.S. Army Research Laboratory, Aberdeen Proving Ground, Maryland 21005–5066, Attention: David W. Ore, Site Manager; and

2. The NRC staff, by delivery to the Executive Director for Operations, One White Flint North, 11555 Rockville Pike, Rockville, MD 20852, or by mail, addressed to the Executive Director for Operations, U.S. Nuclear Regulatory Commission, Washington, DC 20555.

For further details with respect to this action, the decommissioning plan for building 611B is available for inspection at the NRC's Public Document Room, 2120 L Street N.W., Washington, DC 20555.

Dated at King of Prussia, Pennsylvania, this 21st day of March, 2000.

For the Nuclear Regulatory Commission.

Francis M. Costello,

Deputy Director, Division of Nuclear Materials Safety, RI.

[FR Doc. 00–7965 Filed 3–30–00; 8:45 am]

BILLING CODE 7590–01–P

NUCLEAR REGULATORY COMMISSION

[Docket No. 040–06377]

Consideration of Amendment Request for Decommissioning of Department of the Army , U. S. Army Tank-Automotive and Armaments Command, Building 611B at Picatinny Arsenal, New Jersey, and Opportunity for a Hearing

AGENCY: Nuclear Regulatory Commission.

ACTION: Notice of consideration of amendment request for decommissioning of Department of the Army, U.S. Army Tank-Automotive and Armaments Command, Building 611B at Picatinny Arsenal, New Jersey, and opportunity for a hearing.

The U.S. Nuclear Regulatory Commission is considering issuance of an amendment to Source Material License No. SUB–348 (SUB–348), issued to the Department of the Army, U.S. Army Tank-Automotive and Armaments Command, Armament Research, Development and Engineering Center (the licensee), to authorize decommissioning of Building 611B at their facility in Picatinny Arsenal, New Jersey.

On November 29, 1999, the licensee submitted a Decommissioning Plan for Building 611B that summarized the decommissioning activities that will be undertaken to remediate the building and areas of the surrounding soil at Picatinny Arsenal. In and around Building 611B, the building surfaces, equipment, and some areas of soil are contaminated with depleted uranium (DU) resulting from licensed operations conducted mainly from 1979 to 1984.

The NRC will require the licensee to remediate Building 611B and the surrounding area to meet NRC's decommissioning criteria, and during the decommissioning activities, to maintain effluents and doses within NRC requirements and as low as reasonably achievable.

Prior to approving the decommissioning plan, the NRC will have made findings required by the Atomic Energy Act of 1954, as amended, and NRC's regulations. Approval of the Decommissioning Plan for Building 611B will be documented in an amendment to License No. SUB–348.

The NRC hereby provides notice that this is a proceeding on an application for amendment of a license falling within the scope of Subpart L ''Informal Hearing Procedures for Adjudication in Materials Licensing Proceedings,'' of NRC's rules and practice for domestic licensing proceedings in 10 CFR Part 2. Pursuant to 10 CFR 2.1205(a), any person whose interest may be affected by this proceeding may file a request for a hearing in accordance with 10 CFR 2.1205(c). A request for a hearing must be filed within thirty (30) days of the date of publication of the **Federal Register** Notice.

The request for the hearing must be filed with the Office of the Secretary either:

1. By delivery to the Docketing and Service Branch of the Secretary at One White Flint North, 11555 Rockville Pike, Rockville, MD 20852–2738; or

2. By mail or telegram addressed to the Secretary, U.S. Nuclear Regulatory Commission, Washington, DC 20555. Attention: Docketing and Service Branch.

In addition to meeting other applicable requirements of 10 CFR Part 2 of the NRC's regulations, a request for a hearing filed by a person other than an applicant must describe in detail:

1. The interest of the requester in the proceeding;

2. How that interest may be affected by the results of the proceeding, including the reasons why the requester should be permitted a hearing, with particular reference to the factors set out in 10 CFR 2.1205(g);

3. The requesters areas of concern about the licensing activity that is the subject matter of the proceeding; and

4. The circumstances establishing that the request for a hearing is timely in accordance with 10 CFR 2.1205(c).

In accordance with 10 CFR 2.1205(e), each request for a hearing must also be served, by delivering it personally or by mail, to:

1. The applicant, Department of the Army, U.S. Army Tank-Automotive and Armaments Command, Armament Research, Development and Engineering Center, Picatinny Arsenal, NJ 07806–5000, Attention: Richard W. Fliszar; and

2. The NRC staff, by delivery to the Executive Director for Operations, One White Flint North, 11555 Rockville Pike, Rockville, MD 20852, or by mail, addressed to the Executive Director for Operations, U.S. Nuclear Regulatory Commission, Washington, DC 20555.

For further details with respect to this action, the decommissioning plan for building 611B is available for inspection at the NRC's Public Document Room, 2120 L Street N.W., Washington, DC 20555.

Dated at King of Prussia, Pennsylvania, this 21st day of March, 2000.

For the Nuclear Regulatory Commission.

Francis M. Costello,

Deputy Director, Division of Nuclear Materials Safety, RI.

[FR Doc. 00–7964 Filed 3–30–00; 8:45 am]

BILLING CODE 7590–01–P

SECURITIES AND EXCHANGE COMMISSION

[Release No. 34–42576; File No. SR–CSE–99–06]

Self-Regulatory Organizations; Notice of Filing of Proposed Rule Change and Amendment Nos. 1, 2, and 3 by the Cincinnati Stock Exchange, Inc., To Extend Limit Order Protection to GTX Orders

March 24, 2000.

Pursuant to Section 19(b)(1) of the Securities Exchange Act of 1934 (''Act''),[1] and Rule 19b–4 thereunder,[2] notice is hereby given that on December 27, 1999, the Cincinnati Stock Exchange, Inc. (''CSE'' or ''Exchange'') filed with the Securities and Exchange Commission (''Commission'') the proposed rule change as described in Items I, II, and III below, which Items have been prepared by the Exchange. On March 9, 2000, the Exchange filed an amendment to the proposal.[3] On March 21, 2000, the Exchange filed two additional amendments to the proposal.[4] The Exchange has filed this proposal pursuant to Section 19(b)(3)(A) of the Act[5] and rule 19b–4(f)(6)[6] thereunder, which renders the proposal effective upon filing with the Commission. The Commission is publishing this notice to solicit comments on the proposal rule change from interested persons.

I. Self-Regulatory Organization's Statement of the Terms of Substance of the Proposed Rule Change

The Exchange proposes to amend Interpretation and Policy .02 to CSE Rule 11.9(u) to ensure execution of limit orders on the books of CSE Designated Dealers by extending the CSE's limit order protection interpretation to orders eligible for execution in a primary market's after-hours trading session. The text of the proposed rule change is available at the CSE and at the Commission.

II. Self-Regulatory Organization's Statement of the Purpose of, and Statutory Basis for, the Proposed Rule Change

In its filing with the Commission, the Exchange included statements concerning the purpose of and basis for the proposed rule change and discussed any comments it received on the proposed rule change. The text of these statements may be examined at the places specified in Item IV below. The Exchange has prepared summaries, set forth in sections A, B, and C below, of the most significant aspects of such statements.

A. Self-Regulatory Organization's Statement of the Purpose of, and Statutory Basis for, the Proposed Rule Change

1. Purpose

The CSE proposal is designed to ensure execution of limit orders on the books of CSE Designated Dealers by extending the CSE's limit order protection interpretation to orders eligible for execution in a primary market's after-hours trading session.[7] The Exchange believes that its proposal presents no novel issues and is substantially similar to those primary market print protection rules previously approved by the Commission.[8]

Under the proposal, during the extended period, Designated Dealers will hold within their systems GTX orders in any security traded on the Exchange pursuant to unlisted trading privileges (''UTP'') and deliver the orders to the CSE after 5 p.m.[9] These orders will be executed by the CSE on a first-in, first-out (''FIFO'') basis after 5 p.m.

The CSE does not propose to establish a separate after-hours trading session to compete with NYSE's Crossing Session I. Instead, it proposes to amend the limit order protection requirements to require

[1] 15 U.S.C. 78s(b)(1).

[2] 17 CFR 240.19b–4.

[3] *See* March 2, 2000 letter from Jeffrey T. Brown, Vice President Regulation and General Counsel, CSE, to Constance Kiggins, Special Counsel, Division of Market Regulation, SEC (''Amendment No. 1''). In Amendment No. 1, the Exchange provided the date on which the CSE's Executive Committee of the Board of Trustees approved the proposed rule change.

[4] *See* March 7, 2000 letter from Jeffrey T. Brown, Vice President Regulation and General Counsel, CSE, to Alton Harvey, Chief, Office of Market Watch, Commission (''Amendment No. 2''). In Amendment No. 2, the CSE added a summary of the purpose of the proposed rule change in Section I of the proposal. *See also* March 20, 2000 letter from Jeffrey T. Brown, Vice President Regulation and General Counsel, CSE, to Alton Harvey, Chief, Office of Market Watch, Commission (''Amendment No. 3''). In Amendment No. 3, the CSE requested that the proposal be effective upon filing with the Commission pursuant to Section 19(b)(3)(A) of the Act and Rule 19b–4(f)(6) thereunder. The Exchange further requested that the Commission waive the requirement that the proposed rule change not become operative before 30 days from the date of filing pursuant to Rule 19b–4(f)(6)(iii), and that the Commission accept the Exchange's original filing as satisfying the requirement under Rule 19b–4(f)(6)(iii) that the Exchange provide the Commission with five business days notice of its intent to file the proposed rule change. 15 U.S.C. 78s(b)(3)(A) and 17 CFR 240.19b–4(f)(6)(iii).

[5] 15 U.S.C. 78s(b)(3)(A).

[6] 17 CFR 240.19b–4(f)(6).

[7] The NYSE's Crossing Session I, which permits the execution of single-stock, single-sided closing-price orders and crosses of single-stock closing-price buy and sell orders, was approved by the Commission on May 20, 1991, and began operation on June 13, 1991. *See* Securities Exchange Act Release No. 29237 (May 24, 1991), 56 FR 24853 (May 31, 1991) (SR–NYSE–90–52 and SR–NYSE–90–53). The American Stock Exchange, LLC's (''Amex'') After-Hours Trading (''AHT'') facility was approved by the Commission on August 2, 1991. *See* Securities Exchange Act Release No. 29515 (August 2, 1991), 56 FR 37736 (August 8, 1991) (SR–Amex–91–15).

[8] Procedures established by the other regional exchanges in 1991 require their specialists to provide primary market protection to limit orders based on the volume that prints in the primary market's after-hours session. *See* Securities Exchange Act Release Nos. 29301 (June 13, 1991), 56 FR 28182 (June 19, 1991) (SR–BSE–91–4) (''Boston Stock Exchange Approval Order''); 29297 (June 13, 1991), 56 FR 28191 (June 19, 1991) (SR–MSE–91–11) (''MSE Approval Order''); 29300 (June 13, 1991), 56 FR 28212 (June 19, 1991) (SR–Phlx–91–26) (''Philadelphia Stock Exchange Approval Order''); 29749 (September 27, 1991), 56 FR 50405 (October 4, 1991) (SR–Phlx–91–32) (''Philadelphia Stock Exchange Amendment''); 29305 (June 13, 1991), 56 FR 28208 (June 19, 1991) (SR–PSE–91–21) (''Pacific Strock Exchange Approval Order''); and 29543 (August 9, 1991), 56 FR 40929 (August 16, 1991) (SR–PSE–91–28) (''Pacific Stock Exchange Amendment''). While CSE Interpretation and Policy .02 to Rule 11.9(u) requires similar primary market print protection during regular trading hours, the Chapter 11 rules are applicable currently only to the regular trading session.

[9] All references to time are Eastern Time unless noted otherwise. Presently, the primary markets for CSE securities traded according to UTP, the NYSE and the Amex, end their regular trading sessions and report closing prices shortly after 4 p.m.

its Designated Dealers to fill certain limit orders (orders which satisfy certain stated criteria) after the close of the regular CSE auction market trading session based upon CSE Rule 11.1(b) which permits CSE to execute orders during the hours which a security is traded on a principal exchange.[10]

Under the proposal, CSE Designated Dealers will scan their limit order books at 4 p.m. for limit orders that are priced at the primary market's closing price and have been designated as ''GTX'' (''good 'til cancelled, executable in the after-hours session'').[11] The CSE proposal would give customers the option of deciding whether they want their limit orders to be designated as GTX orders and thus eligible for execution after the close of the regular primary market.[12] If a limit order meets these criteria, then it would become eligible for a fill at the primary market closing price based on volume that prints in the primary market's after-hours session. The only two situations under which a CSE Designated Dealer would not be obligated to fill customer limit orders, designated as GTX, based on volume that prints in the primary market's after-hours session are: (1) If it can be demonstrated that the order would not have been executed if it had been transmitted to the primary market; and (2) if a customer cancels a GTX order.[13] GTX orders will retain the priority among themselves that exists on the Designated Dealers' books and would be entitled to an execution based on that priority. If a limit order that is eligible for limit order protection in an after-hours session does not get executed, it will remain on the limit order books of the CSE Designated Dealer and would retain its priority during the next day's regular trading session.

Designated Dealers will deliver to the CSE for execution GTX orders once the appropriate volume in a particular security in the primary market's crossing session has been determined. The Exchange proposes to implement trade reporting for GTX orders by reporting each execution immediately after the primary market's after-hours session. As executions occur between 5:00 p.m. and 5:05 p.m., they will be reported to the consolidated tape as ''Out-of-Sequence'' (or ''Sold'' sale) transactions. Because other exchanges may be operating during this time, printing the GTX after-hours crossing session trades in this manner will ensure that the transaction reports do not update the consolidated last sale.

Clearance and Settlement

Clearance and settlement of trades that result from after-hours limit order protection will occur in the same manner and at the same time as regular way trading session transactions. Once the CSE Control Room Staff have completed their end-of-day procedures at approximately 5:15 p.m., they inform the Operations area to bring down the National Securities Trading System (''NSTS'').[14] Operations will initiate the process of bringing down the system, which includes clearing out the book and running roll files to update the Dealer of the Day obligations. Approximately one hour after the initiation of bringing down the system, the clearing files are delivered to National Securities Clearing Corporation.

Trading Halts in Eligible Securities

Executions of GTX orders will not be available for any issue that remained halted as of the close of the traditional trading session on the primary market. In addition, executions will be prohibited if a market-wide ''circuit breaker'' trading half remained in effect at the close of the primary market traditional trading session.

Surveillance and Oversight

The Exchange will conduct surveillance and oversee all GTX orders in the same manner and using the same techniques as used during the traditional trading session. These systems should reduce the possibility for intentional or inadvertent mishandling of orders and should detect any trading abuses.

Exemptive Relief

The Exchange requested, and was granted, an exemption from Rule 10a-1 under the Act, the Commission's short sale rule.[15]

2. Statutory Basis

The Exchange believes the proposed rule change is consistent with Section 6(b) of the Act[16] in general, and furthers the objectives of Section 6(b)(5)[17] in particular. The Exchange believes the proposed rule is consistent with Section 6(b)(5) in that it is designed to promote just and equitable principles of trade and to remove impediments to and perfect the mechanism of a free and open market and a national market system, and, in general, to protect investors and the public interest.

B. Self-Regulatory Organization's Statement on Burden on Competition

The Exchange does not believe that the proposed rule change will impose any inappropriate burden on competition.

C. Self-Regulatory Organization's Statement on Comments on the Proposed Rule Change Received From Members, Participants or Others

No comments were solicited or received in connection with the proposed rule change.

III. Date of Effectiveness of the Proposed Rule Change and Timing for Commission Action

Because the foregoing proposed rule change does not:

(i) Significantly affect the protection of investors or the public interest;

[10] Currently, pursuant to CSE Rule 11.1(b), the hours of trading for any security traded on the Exchange which is also traded on another national securities exchange (''dually traded'') or exchanges (''multiply traded'') shall be, in addition to the hours of trading set forth in paragraph (a) of this rule 9:30 a.m. to 4:05 p.m.), *the hours during which the security is traded on the principal exchange* (emphasis added). Therefore, trades may be executed immediately after the primary exchange's after-hours session.

[11] Members will designate limit orders that are eligible for limit order protection based on the volume that prints in a primary market's after-hours trading session as ''GTX'' orders. Any customer Good 'til Cancelled (''GTC'') limit orders on the book of the member during the regular trading session of 9:30 a.m. to 4:05 p.m. will remain there and will not be eligible for limit order protection based on the volume that prints in the primary market's after-hours session.

[12] CSE will use its existing systems to implement the proposed rule change and execute GTX orders. The CSE has no systems capacity concerns regarding the execution of GTX orders.

[13] Under the CSE proposal, a customer can cancel a GTX order during the regular 8:30 a.m. to 3:05 p.m. (Central Time) session and at any time up until the execution based on the NYSE Crossing Session I print.

[14] NSTS is the CSE's electronic communication and execution facility through which bids and offers of competing dealers, as well as public orders, are consolidated for review and execution by system users. NSTS is the platform supporting the CSE's regular trading session and will be the platform supporting the proposed limit order protection of GTX orders. Use of NSTS in this manner will not adversely impact the capacity or operation of NSTS during the regular trading session.

[15] The Commission has granted the Exchange an exemption from Rule 10a-1 under the Act for limit orders for NYSE listed securities that are priced at the NYSE's closing price and have been designated for execution based on the volume that prints in NYSE's Crossing Session I. *See* March 23, 2000 letter to Jeffrey T. Brown, Vice President Regulation and General Counsel, CSE, from James A. Brigagliano, Assistant Director, Division of Market Regulation, Commission. The Exchange must seek further exemptive relief should it expand the scope of limit order protection to include orders for securities that are priced at the close and designated for execution based on volume that prints on additional primary markets.

[16] 15 U.S.C. 78f(b).

[17] 15 U.S.C. 78f(b)(5).

(ii) Impose any significant burden on competition; and

(iii) Become operative for 30 days from the date on which it was filed, or such shorter time as the Commission may designate, it has become effective pursuant to Section 19(b)(3)(A) of the Act[18] and Rule 19b–4(f)(6)[19] thereunder. At any time within 60 days of the filing of the proposed rule change, the Commission may summarily abrogate such rule change if it appears to the Commission that such action is necessary or appropriate in the public interest, for the protection of investors, or otherwise in furtherance of the purposes of the Act.

The Exchange has requested that the Commission accelerate the operative date. The Commission finds good cause to designate the proposal to become immediately operative upon filing, because such designation is consistent with the protection of investors and the public interest. Acceleration of the operative date will provide investors immediately with a choice of having GTX orders filled at a primary market or at the CSE. For these reasons, the Commission finds good cause to designate that the proposal become operative immediately.[20]

IV. Solicitation of Comments

Interested persons are invited to submit written data, views and arguments concerning the foregoing, including whether the proposed rule change is consistent with the Act. Persons making written submissions should file six copies thereof with the Secretary, Securities and Exchange Commission, 450 Fifth Street, NW, Washington, DC 20549–0609. Copies of the submission, all subsequent amendments, all written statements with respect to the proposed rule change that are filed with the Commission, and all written communications relating to the proposed rule change between the Commission and any person, other than those that may be withheld from the public in accordance with the provisions of 5 U.S.C. 552, will be available for inspection and copying in the Commission's Public Reference Room. Copies of such filing will also be available for inspection and copying at the principal office of the Exchange. All submissions should refer to file number SR–CSE–99–06 and should be submitted by April 21, 2000.

[18] 15 U.S.C. 78s(b)(3)(A).

[19] 17 CFR 240.19b–4(f)(6).

[20] In reviewing this rule, the Commission has considered the proposed rule's impact on efficiency, competition, and capital formation. 15 U.S.C. 78c(f).

For the Commission by the Division of Market Regulation, pursuant to delegated authority.[21]

Margaret H. McFarland,

Deputy Secretary.

[FR Doc. 00–7976 Filed 3–30; 8:45 am]

BILLING CODE 8010–01–M

[21] 17 CFR 200.30–3(a)(12).

SECURITIES AND EXCHANGE COMMISSION

[Release No. 34–42572; File No. SR–NYSE–00–09]

Self-Regulatory Organizations; Notice of Filing of Proposed Rule Change by the New York Stock Exchange, Inc. Relating to Amendments to Exchange Rule 123B

March 23, 2000.

Pursuant to Section 19(b)(1) of the Securities Exchange Act of 1934 (the ''Act''),[1] and Rule 19b–4 thereunder,[2] notice is hereby given that on February 28, 2000, the New York Stock Exchange, Inc. (''NYSE'' or ''Exchange'') file with the Securities and Exchange Commission (''SEC'' or ''Commission'') the proposed rule change. The proposed rule change is described in Items I, II, and III below, which Items have been prepared by the Exchange. The Commission is publishing this notice to solicit comments on the proposed rule change from interested persons.

I. Self-Regulatory Organization's Statement of the Terms of Substance of the Proposed Rule Change

The proposed rule change involves two amendments to Exchange Rule 123B. The first amendment relates to commission-free execution or orders received by specialists through the SuperDOT System, and the second amendment clarifies the status of an order that is canceled and replaced.[3]

[1] 15 U.S.C. 78s(b)(1).

[2] 17 CFR 240.19b–4.

[3] The Commission approved these two amendments to Exchange Rule 123B on a pilot basis on November 30, 1999. *See* Exchange Act Release No. 42184 (November 30, 1999), 64 FR 68710 (December 8, 1999), File No. SR–NYSE–99–40. In SR–NYSE–99–40, a third amendment to Exchange Rule 123B relating to execution reports of stopped orders was also proposed and approved by the Commission. However, the Exchange did implement this third amendment upon the Commission's approval, and is not seeking to implement this third amendment at this time. *See* letter from James E. Buck, Senior Vice President and Secretary, Exchange, to Richard Strasser, Assistant Director, Division of Market Regulation, Commission, dated February 25, 2000. Additionally, in File No. SR–NYSE–00–13, filed with the Commission on March 21, 2000, the Exchange has requested an extension of this pilot program for an additional 60 days or until April 26, 2000, and has requested permanent approval of this pilot program on an accelerated basis.

II. Self-Regulatory Organization's Statement of the Purpose of, and Statutory Basis for, the Proposed Rule Change

In its filing with the Commission, the Exchange included statements concerning the purpose of, and basis for, the proposed rule change and discussed any comments it received on the proposed rule change. The text of these statements may be examined at the places specified in Item IV below. The Exchange has prepared summaries, set forth in Sections A, B, and C below, of the most significant aspects of such statements.

A. Self-Regulatory Organization's Statement of the Purpose of, and Statutory Basis for, the Proposed Rule Change

1. Purpose

On October 4, 1999, the Exchange filed a proposed rule change with the Commission consisting of three amendments to Exchange Rule 123B. On November 30, 1999, the Commission approved the proposed rule change as a pilot through February 26, 2000.[4]

One of the amendments to Rule 123B provided for the commission-free execution of all orders received by Exchange specialists through the SuperDOT system if such orders were executed within five minutes. Under former Exchange Rule 123B(b)(1), specialists were not permitted to charge floor brokerage (*i.e.,* a commission imposed on exchange floor brokers) for executing market and marketable limit orders[5] received by means of the Exchange's automated order routing system known as SuperDOT. The Exchange proposed to amend Rule 123B and add .10 in the Supplementary Material to the Rule to extend the no commission policy to all orders received by specialists via SuperDOT that are executed within five minutes of receipt. This proposal extended the commission-free execution to include limit orders that are not marketable at the time of receipt by the specialist but that are executed within the five-minute timeframe. The proposed rule change

[4] *See* Exchange Act Release No. 42184 (November 30, 1999), 64 FR 68710 (December 8, 1999). The third proposed change to Rule 123B related to reports of executions within two minutes for orders stopped by specialists. The Exchange is not implementing this third proposed change to Rule 123B at this time. *See* Footnote 3, *infra*. Therefore, the Commission is not seeking comment on this third amendment.

[5] A marketable limit order is defined as an order with a limit price which is at or better than the prevailing quotation at the time the order is received by the specialist. *See* Exchange Rule 123B(b)(1).

eliminated reference to ''market'' and ''marketable limit orders'' since all orders received through SuperDOT would be eligible for commission-free execution. The provision allowing the specialist to charge a commission on orders to sell short was also eliminated. The Exchange instituted the pricing initiative of commission-free executions, in conjunction with the Exchange's specialist community, effective with trades executed on December 29, 1999. To date, the procedure has worked well. The Exchange has not received any complaints concerning this policy.

A second amendment added language to Rule 123B to clarify that if an order that had been placed with the specialist is canceled and replaced, the replacement order is considered a new order for purposes of the Rule. Since the implementation of the pilot program, the Exchange is not aware of any problems associated with the clarifying language.

2. Statutory Basis

The Exchange believes that the basis for the proposed rule change is the requirement under Section 6(b)(5) of the Act[6] that an Exchange have rules that are designed to promote just and equitable principles of trade, facilitate transactions in securities, remove impediments to and perfect the mechanism of a free and open market and a national market system and, in general, to protect investors and the public interest. In accordance with Section 11A(a)(1)(C) of the Act,[7] the Exchange also believes that the proposed rule change will foster the economically efficient execution of securities transactions, fair competition among brokers and dealers, among exchange markets, and between exchange markets and markets other than exchange markets.

B. Self-Regulatory Organization's Statement on Burden on Competition

These enhancements will provide the Exchange the opportunity to compete more effectively for order flow with other marketplaces. Thus, the Exchange does not believe that the proposed rule change will impose any burden on competition that is not necessary or appropriate in furtherance of the purposes of the Act.

[6] 15 U.S.C. 78f(b)(5).

[7] 15 U.S.C. 78k–1(a)(1)(c).

C. Self-Regulatory Organization's Statement on Comments on the Proposed Rule Change Received From Members, Participants or Others

The Exchange reviewed the proposed rule change with members and organizations representing various constituencies of the Exchange and the responses to the proposed rule changes were positive. The Exchange has not otherwise solicited, and does not intend to solicit, comments on this proposed rule change. The Exchange has not received any written comments from members or other interested parties.

III. Date of Effectiveness of the Proposed Rule Change and Timing for Commission Action

Within 35 days of the date of publication of this notice in the **Federal Register** or within such longer period (i) as the Commission may designate up to 90 days of such date if it finds such longer period to be appropriate and publishes its reasons for so finding or (ii) as to which the self-regulatory organization consents, the Commission will:

A. By order approve the proposed rule change, or

B. Institute proceedings to determine whether the proposed rule change should be disapproved.

IV. Solicitation of Comments

Interested persons are invited to submit written data, views and arguments concerning the foregoing including whether the proposed rule is consistent with the Act. Persons making written submissions should file six copies thereof with the Secretary, Securities and Exchange Commission, 450 Fifth Street, NW, Washington, DC 20549–0609. Copies of the submission, all subsequent amendments, all written statements with respect to the proposed rule change that are filed with the Commission, and all written communications relating to the proposed rule change between the Commission and any person, other than those that may be withheld from the public in accordance with the provisions of 5 U.S.C. 552, will be available for inspection and copying in the Commission's Public Reference Room.

Copies of such filing will also be available for inspection and copying at the principal office of the Exchange. All submissions should refer to File No. SR–NYSE–00–09 and should be submitted April 21, 2000.

For the Commission, by the Division of Market Regulation, pursuant to delegated authority.[8]

Margaret H. McFarland,

Deputy Secretary.

[FR Doc. 00–7974 Filed 3–30–00; 8:45 am]

BILLING CODE 8010–01–M

[8] 17 CFR 200.30–3(a)(12).

SECURITIES AND EXCHANGE COMMISSION

[Release No. 34–42574; File No. SR–NYSE–99–14]

Self-Regulatory Organizations; New York Stock Exchange, Inc.; Order Approving Proposed Rule Change and Amendment Nos. 1 and 2 Thereto Relating to Amendments to the Listed Company Manual

March 24, 2000.

I. Introduction

On April 12, 1999, the New York Stock Exchange, Inc. (''NYSE'' or ''Exchange'') filed with the Securities and Exchange Commission (''SEC'' or ''Commission'') pursuant to Section 19(b)(1) of the Securities Exchange Act of 1934 (''Act'')[1] and Rule 19b–4 thereunder,[2] a proposed rule change relating to amendments to the NYSE's Listed Company Manual (''Manual'') regarding the Exchange's procedures and oversight of listed companies. On October 25, 1999, the Exchange submitted Amendment No. 1 to the proposed rule change.[3] On December 16, 1999, the Exchange submitted Amendment No. 2.[4]

The proposed rule change, as amended, as published for comment in the **Federal Register** on February 9, 2000.[5] No comments were received on

[1] 15 U.S.C. 78s(b)(1).

[2] 17 CFR 240.19b–4.

[3] In Amendment No. 1, the NYSE made several clarifications to the proposed rule change, incorporated appropriate provisions for Non-U.S. issuers, and revised the procedures for the annual report requirement. *See* Letter to Richard Strasser, Assistant Director, Division of Market Regulation (''Division''), SEC, from James E. Buck, Senior Vice President and Secretary, NYSE, dated October 22, 1999 (''Amendment No. 1'').

[4] In Amendment No. 2, the NYSE made several technical changes to the text of the proposed rule change and clarified that the supplemental listing application (''SLAP'') provision applies to Non-U.S. issuers. *See* Letter to Richard Strasser, Assistant Director, Division, SEC, from James E. Buck, Senior Vice President and Secretary, NYSE, dated December 14, 1999 (''Amendment No. 2''). In Amendment No. 2, the Exchange also requested accelerated approval of the proposed rule change. The Exchange withdrew this request as per telephone conversation between Amy Bilbija, Counsel, NYSE, and Terri Evans, Special Counsel, and Heather Traeger, Attorney, Division, SEC, on January 4, 2000.

[5] Securities Exchange Act Release No. 42364 (January 28, 2000), 65 FR 6432.

the proposal. This order approves the NYSE proposal, as amended.

II. Description of the Proposal

The proposal would make several changes to the Exchange's procedures and oversight of listed companies. First, the proposal would institute a regularly review procedure for listing applicants whereby Exchange staff would access media outlets, run Central Registration Depository checks, and consult with staff in the SEC's Division of Enforcement to identify any potential issues of concern regarding the applicant company's board members, officers (as the term ''Officer'' is defined in Section 16 of the Act),[6] and non-institutional shareholders with an interest in excess of 10 percent. The proposal also would require each applicant company to submit a letter from inside or outside counsel representing that, to the company's knowledge, no officer, board member, or non-institutional shareholder with more than 10 percent ownership in the company has been convicted of a felony or misdemeanor relating to financial issues (*e.g.,* embezzlement, fraud, or theft) in the past 10 years.

In addition, the proposal would amend the Exchange's procedures for processing SLAPs submitted for consideration by companies that have been identified as being below the Exchange's continued listing criteria.[7] Upon receipt of a SLAP from such a company, Exchange staff would first determine whether or not the SLAP is for an issuance to current shareholders (*e.g.,* a stock split). If so, the application would be authorized. If, however, the SLAP is for an issuance to new shareholders, the application will be reviewed against the Exchange-approved plan pursuant to which the company is operating to return to financial compliance with the Exchange's listing standards. If the proposed issuance is within the scope of the plan, or furthers the goals of the plan, it will be approved. Conversely, the Exchange will deny authorization if the proposed issuance is outside the scope of the plan or contradicts its goals.[8]

Third, the proposal would amend the Exchange's annual report requirements. The proposal would require that a company mail to shareholders by the specified date either an annual report or a Form 10–K (Form 20–F for Non-U.S. issuers) with an indication that it is in lieu of the annual report.[9] Due to longer mailing and processing time, international companies will have a maximum period following the SEC filing deadlines of 45 days to mail either the annual report or Form 20–F (with an indication that it is in lieu of the annual report), where domestic issuers would have 30 days.[10]

Furthermore, for companies that are unable to timely file a Form 10–K (or Form 20–F), the proposal would allow the Exchange to consider why the filing cannot be made, evaluate the continued listing status of the company in light of the specific facts presented, and require that the company issue a press release. Once the Form 10–K (or Form 20–F) is filed, the proposal would require a mailing of the Form 10–K (or Form 20–F) or an annual report to shareholders within 15 days (30 days for a Non-U.S. issuer).[11]

Finally, the proposal would permit companies to distribute annual reports or SEC forms electronically to beneficial holders who give prior written consent. Such consent must be in writing, which may be in the form of electronic mail.[12]

The proposal would also provide that failure to comply with these requirements will result in presentation of the company's situation to Exchange staff for appropriate action, which could include the determination to proceed with suspension of trading and application to the SEC to delist the security.

III. Discussion

The Commission finds that the proposal is consistent with the requirements of the Act and the rules and regulations thereunder applicable to a national securities exchange.[13] Specifically, the Commission believes that the proposal is consistent with the requirements of Section 6(b)(5) of the Act[14] because it is designed to promote just and equitable principles of trade, to remove impediments to, and perfect the mechanism of a free and open market and, in general, to protect investors and the public interest. The Commission believes that the proposal, by codifying and expanding the Exchange's procedures and oversight of listed companies, strikes a reasonable balance between the Exchange's obligation to protect investors and investor confidence in the market, and its parallel obligation to perfect the mechanism of a free and open market.

The NYSE proposes several amendments to the Manual. First, the Exchange proposes to implement regulatory reviews of key personnel associated with listing applicants. Specifically, the proposal provides for a procedure where Exchange staff would attempt to identify, through a variety of sources, any possible issues of concern regarding an applicant's board members, officers, and certain non-institutional shareholders. The Commission believes that such reviews should strengthen and improve the effectiveness of the procedures for reviewing listing applicants, and enhance investor protection by screening out those companies that the Exchange believes are unsuitable for listing.

The proposal also codifies the Exchange's procedures regarding SLAPs for companies identified as being below continued listing standards. Specifically, the proposal requires that SLAPs concerning an issuance to new shareholders must not conflict with the company's Exchange-approved plan under which it is operating to return to compliance with the Exchange's financial listing standards. The Commission believes that codifying the procedures applicable to the SLAPs of such companies should enhance investor protection by ensuring that SLAPs which fail to satisfy the procedures are denied authorization.

The proposal further amends the Exchange's disclosure requirements for listed companies late in filing Form 10–Ks or annual reports. A company that is unable to make a timely filing will be required to explain its reasons for such lateness and will be required to issue a press release. Furthermore, the continued listing status of the company will be evaluated with regard to the specific facts presented. The proposal also allows companies to electronically distribute annual reports or SEC forms to beneficial shareholders who give prior written consent. Finally, the proposal provides that failure to comply with these requirements could result in the NYSE's determination to suspend trading and apply to the Commission to delist the security. The Commission believes that this proposed change should ensure that companies distribute

[6] 15 U.S.C. 80a–16.

[7] This provision will apply to both U.S. and Non-U.S. issuers. *See supra* note 4.

[8] In this context, the Exchange would recognize that employee stock option plans, although rarely a specific element of a financial plan, are customarily in furtherance of the company's objectives and are thereby consistent with any approved plan.

[9] *See* Amendment No. 1, *supra,* note 3. Domestic companies are required to submit their annual filings on Form 10–K to the SEC within 90 days of the fiscal year end. International companies are required to submit their annual filings on Form 20–F within 180 days of the fiscal year end.

[10] *Id.*

[11] *Id.*

[12] *Id.*

[13] In approving this rule, the Commission has considered the proposed rule change's impact on efficiency, competition, and capital formation. 15 U.S.C. 78c(f).

[14] 15 U.S.C. 78f(b)(5).

their annual reports to investors in a timely manner or provide investors with an explanation for any delay, and provide issuers with explicit notice that a failure to comply with these requirements could result in suspension and delisting from the NYSE. The proposal also should provide investors with faster access to a company's forms or annual reports by allowing electronic distribution to those investors who give express consent to such distribution.

IV. Conclusion

It is therefore ordered, pursuant to Section 19(b)(2) of the Act,[15] that the proposed rule change (SR–NYSE–99–14), as amended, is approved.

For the Commission, by the Division of Market Regulation, pursuant to delegated authority.[16]

Margaret H. McFarland,

Deputy Secretary.

[FR Doc. 00–7975 Filed 3–30–00; 8:45 am]

BILLING CODE 8010–01–M

[15] 15 U.S.C. 78s(b)(2).

[16] 17 CFR 200.30–3(a)(12).

SECURITIES AND EXCHANGE COMMISSION

[Release No. 34–42575; File No. SR–OCC–00–01]

Self-Regulatory Organizations; The Options Clearing Corporation; Notice of Filing of Proposed Rule Change Relating to Exercise Settlement Values for Expiring Index Options

March 24, 2000.

Pursuant to Section 19(b)(1) of the Securities Exchange Act of 1934 (''Act''),[1] notice is hereby given that on January 19, 2000, The Options Clearing Corporation (''OCC'') filed with the Securities and Exchange Commission (''Commission'') and on March 14, 2000, amended the proposed rule change as described in Items I, II, and III below, which items have been prepared primarily by OCC. The Commission is publishing this notice to solicit comments on the proposed rule change from interested parties.

I. Self-Regulatory Organization's Statement of the Terms of Substance of the Proposed Rule Change

The proposed rule change would allow OCC to conform the method used to establish settlement values for expiring stock index options with the method used to value futures on the underlying index when the primary market(s) for one or more component securities of an index is closed on the last trading day before expiration.

II. Self-Regulatory Organization's Statement of the Purpose of, and Statutory Basis for the Proposed Rule Change

In its filing with the Commission, OCC included statements concerning the purpose of and basis for the proposed rule change and discussed any comments it received on the proposed rule change. The text of these statements may be examined at the places specified in Item IV below. OCC has prepared summaries, set forth in sections (A), (B) and (C) below, of the most significant aspects of these statements.[2]

(A) Self-Regulatory Organization's Statement of the Purpose of, and Statutory Basis for, the Proposed Rule Change

The purpose of the proposed rule change is to add new subparagraph (3) to Article XVII, Section 4(a) of OCC's By-Laws. The new subparagraph would permit OCC to conform the exercise settlement value for expiring options on a security index to the final settlement value used for related index futures and options on index futures when the primary market(s) for one or more component securities of the index is closed on the last trading day before expiration. The present default method for setting the exercise settlement amount for the underlying index, as specified in the current version of Article XVII, Section 4(a)(2) and disclosed in the current Options Disclosure Document, is to use the reported level of the stocks in the underlying index at the close of trading on the last preceding day for which a closing index level was reported.

However, this is not the valuation method that would be used under the same circumstances by the Chicago Mercantile Exchange (''CME''), which would determine the settlement value of the index by using the opening values for index stocks affected by the closing as reported when the primary market for such stocks reopens. For example, under CME rule 4003, ''[i]f the New York Stock Exchange (NYSE) does not open on the day scheduled for the determination of the Final Settlement Price [of S&P 500 index futures], then the NYSE-stock component of the Final Settlement Price shall be based on the next opening prices of NYSE stocks.'' The use of different dates and hence potentially different index values for fixing the final settlement values for index options and futures on the same index creates uncertainty and risk for investors who use trading strategies involving index options and index futures based on the expectation that their settlement values will have a predictable relationship. Therefore, OCC is proposing that if the primary market(s) for one or more component securities of an index did not open for trading on the last trading day before expiration of a series of options on such index, an adjustment panel acting pursuant to Article XVII may fix the exercise settlement amount for such options using the opening prices of the affected security or securities when the primary market reopens.

OCC is also amending Article XVII to make clear that (1) OCC has the discretion to determine which market is a security's primary market and (2) when OCC fixes a settlement price based on an index level at the close of trading, the price will be fixed based on the index level at the close of regular trading hours, as determined by OCC.

OCC believes that the proposed rule change is consistent with the requirements of the Act and the rules and regulations thereunder applicable to OCC, and in particular with Section 17A of the Act[3] because it fosters cooperation and coordination with persons engage in the clearance and settlement of securities transactions, removes impediments to and perfects the mechanism of a national system for the prompt and accurate clearance and settlement of securities transactions, and, in general, protects investors and the public interest.

(B) Self-Regulatory Organization's Statement on Burden on Competition

OCC does not believe that the proposed rule change would impose any burden on competition.

(C) Self-Regulatory Organization's Statement on Comments on the Proposed Rule Change Received From Members, Participants or Others

Written comments were not and are not intended to be solicited with respect to the proposed rule change, and none have been received.

III. Date of Effectiveness of the Proposed Rule Change and Timing for Commission Action

Within thirty-five days of the date of publication of this notice in the **Federal Register** or within such longer period (i) as the Commission may designate up to ninety days of such date if it finds such longer period to be appropriate and

[1] 15 U.S.C. 78s(b)(1)

[2] The Commission has modified the text of the summaries prepared by OCC.

[3] 15 U.S.C. 78q–1.

publishes its reasons for so finding or (ii) as to which the self-regulatory organization consents, the Commission will:

(A) By order approved such proposed rule change, or

(B) Institute proceedings to determine whether the proposed rule change should be disapproved.

IV. Solicitation of Comments

Interested persons are invited to submit written data, views, and arguments concerning the foregoing, including whether the proposed rule change is consistent with the Act. Perosns making written submissions should file six copies thereof with the Secretary, Securities and Exchange Commission, 450 Fifth Street, NW, Washington, DC 20549–0609. Copies of the submission, all subsequent amendments, all written statements with respect to the proposed rule change that are filed with the Commission, and all written communications relating to the proposed rule change between the Commission and any person, other than those that may be withheld from the public in accordance with the provisions of 5 U.S.C. 552, will be available for inspection and copying in the Commission's Public Reference Section, 450 Fifth Street, NW, Washington, DC 20549. Copies of such filing also will be available for inspection and copying at the principal office of OCC.

All submissions should refer to File No. SR–OCC–00–01 and should be submitted by April 21, 2000.

For the Commission by the Division of Market Regulation, pursuant to delegated authority.[4]

Margaret H. McFarland,

Deputy Secretary.

[FR Doc. 00–7978 Filed 3–30–00; 8:45 am]

BILLING CODE 8010–01–M

[4] 17 CFR 200.30–3(a)(12).

SECURITIES AND EXCHANGE COMMISSION

[Release No. 34–42577; File No. SR–PCX–00–2]

Self-Regulatory Organizations; Notice of Filing and Order Granting Accelerated Approval of Proposed Rule Change by the Pacific Exchange, Inc. Relating to Communications With Customers and Members of the Public

March 27, 2000.

Pursuant to Section 19(b)(1) of the Securities Exchange Act of 1934 (''Act'')[1] and Rule 19b–4 thereunder,[2] notice is hereby given that on February 11, 2000, the Pacific Exchange, Inc. (''PCX'' or ''Exchange'') filed with the Securities and Exchange Commission (''Commission'') the proposed rule change as described in Items I and II below, which Items have been prepared by the Exchange. On March 8, 2000, the PCX filed Amendment No. 1 to the proposed rule change.[3] The Commission is publishing this notice to solicit comments on the proposed rule change from interested persons and to approve the proposal on an accelerated basis.

I. Self-Regulatory Organization's Statement of the Terms of Substance of the Proposed Rule Change

The PCX proposes to allow members, member organizations, and associated persons to distribute more than one type of options worksheet to customers or members of the public. The text of the proposed rule change is available at the Office of the Secretary, CBOE and at the Commission.

II. Self-Regulatory Organization's Statement of the Purpose of, and Statutory Basis for, the Proposed Rule Change

In its filing with the Commission, the PCX included statements concerning the purpose of and basis for the proposed rule change and discussed any comments it received on the proposed rule change. The text of these statements may be examined at the places specified in Item III below. The PCX has prepared summaries, set forth in Sections A, B, and C below, of the most significant aspects of such statements.

A. Self-Regulatory Organization's Statement of the Purpose of, and Statutory Basis for, the Proposed Rule Change

1. Purpose

The Exchange proposes to amend PCX Rule 9.28 (''Advertisements, Market Letters and Sales Literature Relating to Options'') to allow members, member organizations, and associated persons to distribute to customers or members of the public more than one type of options worksheet to indicate possible outcomes under various market conditions. The proposed rule change: (i) Incorporates worksheets into the definition of ''sales literature'' and establishes that worksheets must comply with the requirements applicable to sales literature; (ii) adds references to members and associated persons; (iii) deletes references to ''standard'' worksheets and deletes prohibitions on ''nonstandard'' worksheets; and (iv) deletes the requirement that worksheets must be uniform within a member organization for each product type. These changes are discussed below.

First, the Exchange proposes to remove the word ''standard'' from PCX Rule 9.28(e)(ii) to incorporate all worksheets communicated to customers or the public into the definition of 'sales literature.'' Under rule 9.28(e)(ii), these worksheets are defined as sales literature and must comply with the requirements applicable to sales literature.

Second, the Exchange proposes to modify PCX Rule 9.28, Commentary .03(E) to require that any (not just standard form) options worksheets must comply with the requirements applicable to sales literature. Under the current rule, once a member organization adopts a ''standard'' worksheet for a particular options strategy or product type (*e.g.,* equities, foreign currencies, indexes, etc.), it may only distribute that standard worksheet to a client, and may not illustrate different market conditions through other worksheets.

Third, the Exchange proposes to add references to members and associated persons to PCX Rule 9.28, Commentary .03(E) to clarify that members and associated persons, and not just member organizations, are responsible for utilizing worksheets that comply with requirements applicable to sales literature. Fourth, the Exchange proposes to delete PCX Rule 9.28, Commentary .03(F), which requires that member organizations use a standard form of worksheet for a particular options strategy, to make the Exchange's rules consistent with this proposal. Finally, the Exchange proposes to renumber PCX Rule 9.28, Commentary .03(G) as new PCX Rule 9.28, Commentary .03(F).

The Exchange believes that the proposed rule change will allow members, member organizations, and associated persons to use Exchange or industry-produced worksheets or to tailor worksheets to specific clientele. The Exchange believes the proposed rule change also ensures that when

[1] 15 U.S.C. 78s(b)(1).

[2] 17 CFR 240.19b–4.

[3] In Amendment No. 1, PCX requested that the Commission grant accelerated approval to the proposed rule change. *See* letter from Robert P. Pacileo, Staff Attorney, Regulatory Policy, PCX, to Richard Strasser, Assistant Director, Division of Market Regulation (''Division''), Commission, dated March 7, 2000. The PCX also changed Exhibit 1 of the proposed rule change to reflect the request for accelerated approval. *See* e-mail from Robert P. Pacileo, Staff Attorney, Regulatory Policy, PCX, to Joseph P. Corcoran, Attorney, Division, Commission, on March 16, 2000.

members, member organizations, and associated persons use options worksheets, all such worksheets will comply with the requirements applicable to sales literature.[4]

In addition, the Exchange believes that the proposed rule change will improve the quality of options worksheets that customers or members of the public receive from members, member organizations, and associated persons.The Exchange also believes that the proposed rule change should enhance members' ability to describe properly the risks and benefits of options trading, and should enhance the ability of customers or members of the public to understand these risks and benefits.

2. Statutory Basis

The exchange believes that the proposal is consistent with Section 6(b)[5] of the Act, in general, and further the objectives of Section 6(b)(5),[6] in particular, in that it is designed to facilitate transactions in securities and remove impediments to and perfect the mechanism of a free and open market and national market system, and to protect investors and the public interest by allowing the distribution of worksheets that are tailored for specific options strategies.

B. Self-Regulatory Organization's Statement on Burden on Competition

The Exchange does not believe that the proposed rule change will impose any burden on competition that is not necessary or appropriate in furtherance of the purposes of the Act.

C. Self-Regulatory Organization's Statement on Comments on the Proposed Rule Change Received From Members, Participants, or Others

Written comments on the proposed rule change were neither solicited nor received.

III. Solicitation of Comments

Interested persons are invited to submit written data, views, and arguments concerning the foregoing, including whether the proposed rule is consistent with the Act. Persons making written submissions should file six copies thereof with the Secretary, Securities and Exchange Commission, 450 Fifth Street, NW, Washington, DC 20549–0609. Copies of the submission, all subsequent amendments, all written statements with respect to the proposed rule change that are filed with the Commission, and all written communications relating to the proposed rule change between the Commission and any person, other than those that may be withheld from the public in accordance with the provisions of 5 U.S.C. 552, will be available for inspection and copying in the Commission's Public Reference Room. Copies of such filing will also be available for inspection and copying at the principal office of the PCX. All submissions should refer to File No. SR–PCX–00–02 and should be submitted by April 21, 2000.

IV. Commission's Findings and Order Granting Accelerated Approval of Proposed Rule Change

After careful review, the Commission finds that the proposal is consistent with the requirements of the Act.[7] In particular, the Commission finds the proposal is consistent with Section 6(b)(5)[8] of the Act. Section 6(b)(5) requires, among other things, that the rules of an exchange be designed to promote just and equitable principles of trade and to protect investors and the public interest.

The Commission believes that the proposal is consistent with the Act because it provides flexibility to PCX member firms while still providing for investor protection. In particular, the proposal provides flexibility to PCX members and their associated persons by allowing them to create options worksheets that match the investment objectives of their clients. At the same time, however, the proposal provides for investor protection by continuing the requirement that a registered options principal first approve the worksheet before its use.

The Commission finds good cause for approving the proposed rule change prior to the thirtieth day after the date of publication of notice thereof in the **Federal Register.** The Commission approved a virtually identical proposal by the Chicago Board Options Exchange (''CBOE''), SR–CBOE–99–27.[9] This proposal was published in the **Federal Register** for the full 21-day comment period and the Commission received no public comments.[10] The current proposal follows the changes approved in SR–CBOE–99–27. The Commission believes, therefore, that granting accelerated approval to the proposed rule change is appropriate and consistent with Section 6[11] of the Act.

It is therefore ordered, pursuant to Section 19(b)(2) of the Act,[12] that the proposed rule change (SR–PCX–00–02), as amended, is hereby approved.

For the Commission, by the Division of Market Regulation, pursuant to delegated authority.[13]

Margaret H. McFarland,

Deputy Secretary.

[FR Doc. 00–7977 Filed 3–30–00; 8:45 am]

BILLING CODE 8010–01–M

[4] *See* Exchange Rule 9.28.

[5] 15 U.S.C. 78f(b).

[6] 15 U.S.C. 78f(b)(5).

[7] In addition, pursuant to Section 3(f) of the Act, the Commission has considered the proposed rule's impact on efficiency, competition, and capital formation. 15 U.S.C. 78c(f).

[8] 15 U.S.C. 78f(b)(5).

[9] *See* Release No. 34–42443 (February 18, 2000), 65 FR 10574 (February 28, 1999) (order approving SR–CBOE–99–27.)

[10] *See* Release No. 34–42186 (November 30, 1999), 64 FR 68707 (December 8, 1999) (notice of filing of SR–CBOE–99–27.)

[11] 15 U.S.C. 78f.

[12] 15 U.S.C. 78s(b)(2).

[13] 17 CFR 200.30–3(a)(12).

SMALL BUSINESS ADMINISTRATION

Reporting and Recordkeeping Requirements Under OMB Review

AGENCY: Small Business Administration.

ACTION: Notice of Reporting Requirements Submitted for OMB Review.

SUMMARY: Under the provisions of the Paperwork Reduction Act (44 U.S.C. Chapter 35), agencies are required to submit proposed reporting and recordkeeping requirements to OMB for review and approval, and to publish a notice in the **Federal Register** notifying the public that the agency has made such a submission.

DATES: Submit comments on or before May 1, 2000. If you intend to comment but cannot prepare comments promptly, please advise the OMB Reviewer and the Agency Clearance Officer before the deadline.

Copies: Request for clearance (OMB 83–1), supporting statement, and other documents submitted to OMB for review may be obtained from the Agency Clearance Officer.

ADDRESSES: Address all comments concerning this notice to: Agency Clearance Officer, Jacqueline White, Small Business Administration, 409 3rd Street, SW, 5th Floor, Washington, DC 20416; and OMB Reviewer, Office of Information and Regulatory Affairs, Office of Management and Budget, New Executive Office Building, Washington, DC 20503.

FOR FURTHER INFORMATION CONTACT: Jacqueline White, Agency Clearance Officer, (202) 205–7044.

SUPPLEMENTARY INFORMATION:

Title: BIC Customer Satisfaction Survey.

Form No.: 1916.

Frequency: On Occasion.

Description of Respondents: New, established and prospective Small Business Owners using the services and programs offered by the Business Information Center Program.

Annual Responses: 1,806.

Annual Burden: 68.

Jacqueline White,

Chief, Administrative Information Branch.

[FR Doc. 00–7945 Filed 3–30–00; 8:45 am]

BILLING CODE 8025–01–P

SMALL BUSINESS ADMINISTRATION

[Declaration of Disaster #3247]

State of Alabama

As a result of the President's major disaster declaration on March 17, 2000, I find that Jefferson and Tuscaloosa Counties in the State of Alabama constitute a disaster area due to damages caused by severe storms and flooding that occurred on March 10–11, 2000. Applications for loans for physical damage as a result of this disaster may be filed until the close of business on May 16, 2000, and for economic injury until the close of business on December 17, 2000 at the address listed below or other locally announced locations:

U.S. Small Business Administration, Disaster Area 2 Office, One Baltimore Place, Suite 300, Atlanta, GA 30308

In addition, applications for economic injury loans from small businesses located in the contiguous counties of Bibb, Blount, Fayette, Greene, Hale, Pickens, Shelby, St. Claire, and Walker in the State of Alabama may be filed until the specified date at the above location.

The interest rates are:

For Physical Damage

Homeowners With Credit Available Elsewhere—*7.625%*

Homeowners Without Credit Available Elsewhere—*3.812%*

Businesses With Credit Available Elsewhere—*8.000%*

Businesses and Non-Profit Organizations Without Credit Available Elsewhere—*4.000%*

Others (Including Non-Profit Organizations) With Credit Available Elsewhere—*6.750%*

For Economic Injury

Businesses and Small Agricultural Cooperatives Without Credit Available Elsewhere—*4.000%*

The number assigned to this disaster for physical damage is 324706 and for economic injury the number is 9G9300.

(Catalog of Federal Domestic Assistance Program Nos. 59002 and 59008)

Dated: March 23, 2000.

Bernard Kulik,

Associate Administrator for Disaster Assistance.

[FR Doc. 00–8025 Filed 3–30–00; 8:45 am]

BILLING CODE 8025–01–U

SMALL BUSINESS ADMINISTRATION

[Declaration of Disaster #3237]

State of Georgia; Amendment #2

In accordance with a notice from the Federal Emergency Management Agency dated March 21, 2000, the above-numbered Declaration is hereby amended to include Turner County, Georgia as a disaster area due to damages caused by severe storms and tornadoes that occurred on February 14, 2000.

In addition, applications for economic injury loans from small businesses located in the contiguous Counties of Ben Hill, Crisp, and Wilcox in the State of Georgia may be filed until the specified date at the previously designated location. Any counties contiguous to the above-named primary county and not listed herein have been previously declared.

All other information remains the same, *i.e.,* the deadline for filing applications for physical damage is April 15, 2000 and for economic injury the deadline is November 15, 2000.

(Catalog of Federal Domestic Assistance Program Nos. 59002 and 59008)

Dated: March 23, 2000.

Bernard Kulik,

Associate Administrator for Disaster Assistance.

[FR Doc. 00–8026 Filed 3–30–00; 8:45 am]

BILLING CODE 8025–01–U

SMALL BUSINESS ADMINISTRATION

[Declaration of Disaster #3248]

State of Louisiana

Terrebonne Parish and the contiguous parishes of Assumption, Lafourche, and St. Mary in the State of Louisiana constitute a disaster area as a result of damages caused by severe storms and tornadoes that occurred on March 15, 2000. Applications for loans for physical damage as a result of this disaster may be filed until the close of business on May 22, 2000, and for economic injury until the close of business on December 21, 2000 at the address listed below or other locally announced locations:

U.S. Small Business Administration, Disaster Area 3 Office, 4400 Amon Carter Blvd., Suite 102, Ft. Worth, TX 76155

The interest rates are:

For Physical Damage

Homeowners With Credit Available Elsewhere—7.625%

Homeowners Without Credit Available Elsewhere—3.812%

Businesses With Credit Available Elsewhere—8.000%

Businesses and Non-Profit Organizations Without Credit Available Elsewhere—4.000%

Others (Including Non-Profit Organizations) With Credit Available Elsewhere—6.750%

For Economic Injury

Businesses and Small Agricultural Cooperatives Without Credit Available Elsewhere—4.000%

The numbers assigned to this disaster are 324812 for physical damage and 9G9400 for economic injury.

(Catalog of Federal Domestic Assistance Program Nos. 59002 and 59008)

Dated: March 21, 2000.

Aida Alvarez,

Administrator.

[FR Doc. 00–8024 Filed 3–30–00; 8:45 am]

BILLING CODE 8025–01–U

TENNESSEE VALLEY AUTHORITY

Paperwork Reduction Act of 1995, as Amended by Public Law 104–13; Submission for OMB Review; Comment Request

AGENCY: Tennessee Valley Authority.

ACTION: Submission for OMB Review; comment request.

SUMMARY: The proposed information collection described below will be submitted to the Office of Management and Budget (OMB) for review, as required by the Paperwork Reduction Act of 1995 (44 U.S.C. Chapter 35, as amended). The Tennessee Valley Authority is soliciting public comments on this proposed collection as provided by 5 CFR Section 1320.8(d)(I). Requests for information, including copies of the information collection proposed and supporting documentation should be directed to the Agency Clearance Officer: Wilma H. McCauley, Tennessee Valley Authority, 1101 Market Street (WR 4Q), Chattanooga, Tennessee 37402–2801; (423) 751–2523.

Comments should be sent to the OMB Office of Information and Regulatory Affairs, Attention: Desk Officer for

Tennessee Valley Authority no later than May 1, 2000.

SUPPLEMENTARY INFORMATION:

Type of Request: Regular submission.

Title of Information Collection: Foreign Line Crossing Data.

Frequency of Use: On Occasion.

Type of Affected Public: State or local governments, small businesses or organizations, businesses or other for-profit.

Small Businesses or Organizations Affected: Yes.

Federal Budget Functional Category Code: 271.

Estimated Number of Annual Responses: 100.

Estimated Total Annual Burden Hours: 1000.

Estimated Average Burden Hours Per Response: 10.

Need For and Use of Information: When a company wishes to build a line over or under a power transmission line owned by TVA, TVA must review certain engineering data to ensure reliability of the power system and to protect the public by ensuring that the crossing meets the National Electrical Safety Code. The information collection provides such engineering data.

Jacklyn J. Stephenson,

Manager, Enterprise Operations, Information Services.

[FR Doc. 00–7909 Filed 3–30–00; 8:45 am]

BILLING CODE 8120–08–P

OFFICE OF THE UNITED STATES TRADE REPRESENTATIVE

Procurement Thresholds for Implementation of Trade Agreements Act

AGENCY: Office of the United States Trade Representative.

ACTION: Notice of procurement thresholds under the WTO Government Procurement Agreement and Chapter 10 of the North American Free Trade Agreement.

SUMMARY: Executive Order 12260 requries the U.S. Trade Representative to set the U.S. dollar thresholds for application of Title III of the Trade Agreements Act of 1979 (19 U.S.C. 2511 *et seq.*), which implements U.S. obligations under the World Trade Organization Government Procurement Agreement (GPA) and Chapter 10 of the North American Free Trade Agreement (NAFTA). These obligations apply to covered procurements valued at or above the specified U.S. dollars thresholds. The U.S. Trade Representative has determined that the thresholds are as follows:

I. WTO Government Procurement Agreement

A. Central Government Entities Listed in U.S. Annex 1

(1) Procurement of goods and services—$177,000.

(2) Procurement of construction services—$6,806,000.

B. Sub-Central Government Entities Listed in U.S. Annex 2

(1) Procurement of goods and services—$483,000.

(2) Procurement of construction services—$6,806,000.

C. Other Entities Listed in U.S. Annex 3

(1) Procurement of goods and services—$545,000.

(2) Procurement of construction services—$6,806.000.

II. Chapter 10 of the NAFTA

A. Federal Government Entities Listed in the U.S. Schedule to Annex 1001.1a–1

(1) Procurement of goods and services—$54,372.

(2) Procurement of construction services—$7,068,419.

B. Government Enterprises Listed in the U.S. Schedule to Annex 1001.1a–2

(1) Procurement of goods and services—$271,862.

(2) Procurement of construction services—$8,700.000.

FOR FURTHER INFORMATION CONTACT: Questions relating to the implementation of NAFTA Chapter 10 may be directed to John Ellis, USTR Director for International Procurement Negotiations (202/395–3063), Office of the U.S. Trade Representative, 600 Seventeenth Street, NW, Washington, DC 20508.

Carmen Suro-Bredie,

Chairman, Trade Policy Staff Committee.

[FR Doc. 00–7937 Filed 3–30–00; 8:45 am]

BILLING CODE 3190–01–M

DEPARTMENT OF TRANSPORTATION

Federal Highway Administration

Intelligent Transportation Society of America; Public Meeting

AGENCY: Federal Highway Administration (FHWA), DOT.

ACTION: Notice of Public Meeting.

SUMMARY: The Intelligent Transportation Society of America (ITS AMERICA) will hold a meeting of its Board of Directors on Thursday, May 4, 2000. The meeting begins at 1:00 p.m. The letter designations that follow each item mean the following: (I) is an information item; (A) is an action item; (D) is a discussion item. The General Session includes the following items: (1) Introductions and ITS America Antitrust Policy and Conflict of Interest Statements (I); (2) Review & Acceptance of Election Results: Installation of New Board Members (A); (3) Presentation of Nominees for Officers of the Board (I); (4) Acceptance of Other Nominations for Officers and Directors of the 2000–2001 Board of Directors (A); (5) Introductions (I); (6) Review & Approval of January 13, 2000 Board Meeting #33 Minutes; (7) Appointment of the Coordinating Council Officers & At-Large (I/A); (8) Report on New Coordinating Council Committee/Task Force Chairmen; (9) Appointment of State Chapters Council Officers (I); (10) Federal ITS Initiatives Report (I/D); (11) Coordinating Council Report (I); (12) State Chapters Council Report/Reorganization Proposal (I); (13) International Affairs Council Report (I);

(14) ITS Research Agenda Activity (I); (15) Reports of the Board Task Force Chairpersons (I/D/A as appropriate): 5.9 Gigahertz—Deliberation on 5.9GHz Advice Letter to U.S.DOT; Wireless—Report on Wireless Opportunities; Marketing Strategy for ITS America; TEA–21 Revisited; (16) Report on June 2000 Legislative Conference (I/D); (17) President's Report (External Issues) (I); (18) Other Business.

Business Session (US DOT participants excused; Board Members, ITS America Members and Staff Only.) (19) Report of the Audit Committee (I); (20) Report of the ITS America Trade Association (I/D/A); (21) Nominating Committee Recommendations on Board Size and Composition (I/A); (22) President's Report (Internal Issues) (I); (23) Appointment of New Board of Directors Committees (I/A); (24) Other Business; (25) Adjournment until August 6–8, 2000, Board of Directors Workshop & Meeting #35 in Miami, Florida. Board of Directors, Annual Meeting & World Congress Schedules (I).

ITS AMERICA provides a forum for national discussion and recommendations on ITS activities including programs, research needs, strategic planning, standards, international liaison, and priorities.

The charter for the utilization of ITS AMERICA establishes this organization as an advisory committee under the Federal Advisory Committee Act (FACA) 5 USC app. 2, when it provides advice or recommendations to DOT officials on ITS policies and programs. (56 FR 9400, March 6, 1991).

DATES: The Board of Directors of ITS AMERICA will meet on Thursday, May 4, 2000, from 1 p.m.–5 p.m. Room TBA.

ADDRESSES: Sheraton Boston Hotel, 39 Dalton Street, Boston, MA. Phone: (617) 236–2000 and Fax: (617) 236–1702.

FOR FURTHER INFORMATION CONTACT: Materials associated with this meeting may be examined at the offices of ITS AMERICA, 400 Virginia Avenue SW, Suite 800, Washington, DC 20024. Persons needing further information or who request to speak at this meeting should contact Marlene Vence-Crampton at ITS AMERICA by telephone at (202) 484–2904 or by FAX at (202) 484–3483. The DOT contact is Kristy Frizzell, FHWA, HOIT, Washington, DC 20590, (202) 366–9536. Office hours are from 8:30 a.m. to 5 p.m., e.t., Monday through Friday, except for legal holidays.

(23 U.S.C. 315; 49 CFR 1.48)

Issued on: March 27, 2000.

Jeffrey Paniati,

Deputy Director, ITS Joint Program Office.

[FR Doc. 00–7957 Filed 3–30–00; 8:45 am]

BILLING CODE 4910–22–P

DEPARTMENT OF TRANSPORTATION

Federal Highway Administration

Intelligent Transportation Society of America; Public Meeting

AGENCY: Federal Highway Administration (FHWA), DOT.

ACTION: Notice of Public Meeting.

SUMMARY: The Intelligent Transportation Society of America (ITS AMERICA) will hold a meeting of its Coordinating Council meeting on Sunday, April 30, 2000. The following designations are made for each item: (A) Is an ''action'' item; (I) is an ''information item;'' and (D) is a ''discussion'' item. The agenda includes the following: (1) Call to Order and Introductions (I); (2) Statements of Antitrust Compliance and Conflict of Interest (A); (3) Approval of Previous Meeting's Minutes (A); (4) Federal Report (I); (5) President's Report (I); (6) Advice to U.S. DOT on DSRC at 5.9Hz (A); (7) Cell Phones as ITS Enablers; ITS Research Agenda Activity; Prior activities of ITS America; the Coordinating Council; and ITSA Committees (current and future); and the July Coordinating Council Workshop; (8) Committee Reports; (9) Future Coordinating Council Meeting Dates; and (10) Adjournment.

DATES: The Coordinating Council of ITS AMERICA will meet on Sunday, April 30, 2000, from 1 p.m.–5 p.m. (Eastern Standard time). Room TBA.

ADDRESSES: Sheraton Boston Hotel, 39 Dalton Street, Boston, MA. Phone: (617) 236–2000 and Fax: (617) 236–1702.

FOR FURTHER INFORMATION CONTACT: Materials associated with this meeting may be examined at the offices of ITS AMERICA, 400 Virginia Avenue, SW., Suite 800, Washington, D.C. 20024. Persons needing further information or to request to speak at this meeting should contact Marlene Vence-Crampton at ITS AMERICA by telephone at (202) 484–4847, or by Fax at (202) 484–3483. The DOT contact is Kristy Frizzell, FHWA, HOIT, Washington, D.C. 20590, (202) 366–9536. Office hours are from 8:30 a.m. to 5:00 p.m., e.t., Monday through Friday, except for legal holidays.

(23 U.S.C. 315; 49 CFR 1.48)

Issued on: Monday, March 27, 2000.

Jeffrey Paniati,

Deputy Director, ITS Joint Program Office.

[FR Doc. 00–7958 Filed 3–30–00; 8:45 am]

BILLING CODE 4910–22–P

DEPARTMENT OF TRANSPORTATION

National Highway Traffic Safety Administration

Petition for Exemption From the Federal Motor Vehicle Theft Prevention Standard; General Motors

AGENCY: National Highway Traffic Safety Administration (NHTSA), Department of Transportation (DOT).

ACTION: Grant of petition for exemption.

SUMMARY: This document grants in full the petition of General Motors Corporation (GM) for an exemption of a high-theft line, the Chevrolet Malibu, from the parts-marking requirements of the Federal Motor Vehicle Theft Prevention Standard. This petition is granted because the agency has determined that the antitheft device to be placed on the line as standard equipment is likely to be as effective in reducing and deterring motor vehicle theft as compliance with the parts-marking requirements of the Theft Prevention Standard.

DATES: The exemption granted by this notice is effective beginning with model year (MY) 2001.

FOR FURTHER INFORMATION CONTACT: Ms. Rosalind Proctor, Office of Planning and Consumer Programs, NHTSA , 400 Seventh Street, S.W., Washington, D.C. 20590. Ms. Proctor's telephone number is (202) 366–0846. Her fax number is (202) 493–2290.

SUPPLEMENTARY INFORMATION: In a petition dated November 19, 1999, General Motors Corporation (GM), requested an exemption from the parts-marking requirements of the Theft Prevention Standard (49 CFR Part 541) for the Chevrolet Malibu and Chevrolet Venture car lines beginning with MY 2001. The petition is pursuant to 49 CFR Part 543, Exemption From Vehicle Theft Prevention Standard, which provides for exemptions based on the installation of an antitheft device as standard equipment on a car line.

Section 33106(b)(2)(D) of Title 49, United States Code, authorized the Secretary of Transportation to grant an exemption from the parts marking requirements for not more than one additional line of a manufacturer for MYs 1997—2000. However, for a model year after MY 2000, the number of lines for which the agency can grant an exemption is to be decided after the Attorney General completes a review of the effectiveness of parts marking and antitheft devices and finds that antitheft devices are an effective substitute for parts marking. 49 U.S.C. 33103(d)(3). The Attorney General has not yet made a finding and has not decided the number of lines, if any, for which the agency will be authorized to grant an exemption. Therefore, until this decision has been made by the Attorney General, the agency will continue to grant an exemption for not more than one additional line of any manufacturer. On December 21, 1999, the agency informed GM that until an authorization level for granting parts-marking exemptions has been established by the Attorney General, GM must determine which of the two lines for MY 2001 it seeks an exemption from the parts-marking requirements. In response, on January 4, 2000, GM withdrew its petition for exemption of the Chevrolet Venture car line and requested the agency to process its petition for exemption of the Chevrolet Malibu car line for MY 2001.

GM's submittal is considered a complete petition, as required by 49 CFR Part 543.7, in that it met the general requirements contained in § 543.5 and the specific content requirements of § 543.6.

In its petition, GM provided a detailed description and diagram of the identity, design, and location of the components of the antitheft device for the new line. GM will install its Passlock antitheft device as standard equipment on its MY 2001 Chevrolet Malibu car line. GM stated that the Passlock device provides the same kind of functionality as the PASS-Key and PASS-Key II devices, which have been the basis for

exemptions previously granted to GM, but features an electronically-coded lock cylinder rather than an electrically-coded ignition key. Specifically, when the sensor detects proper lock rotation, it sends a code to the body function controller. If the correct code is received, fuel is enabled. If an incorrect code is received, fuel will be disabled for a ten-minute lockout period during which any attempts to start the vehicle will be unsuccessful.

In order to ensure the reliability and durability of the device, GM conducted tests, based on its own specified standards. GM provided a detailed list of the tests conducted. GM states its belief that the device is reliable and durable since it complied with the specified requirements for each test.

The Passlock device utilizes a special lock assembly and decoder module to determine if fuel is to be enabled or disabled. Inserting and rotating the conventional key with the proper mechanical cut into the lock cylinder unlocks and releases the transmission shift lever. However, the vehicle can only be operated when the proper resistive element in the lock housing is sensed and decoded by the module. A magnet encased in the lock sensor will enable the resistive code to be read by the decoder module. If a valid resistive code is received, the decoder module sends an encoded signal to the Power Control Module to start the flow of fuel.

GM also stated that the Passlock device is designed to provide protection against any attempts to defeat it by overriding its lock assembly with an external magnet, forcibly removing the ignition lock cylinder, forcibly rotating the lock, applying a torque to the lock cylinder or its keyway, bypassing the vehicle's lock assembly electronics, or removing its battery power.

GM compared the Passlock device proposed for the Chevrolet Malibu line with its first generation PASS-Key device, which the agency has determined to be as effective in reducing and deterring motor vehicle theft as would compliance with the parts-marking requirements. GM stated that its Passlock device is activated when the owner/operator turns off the ignition of the vehicle and removes the key. According to GM, no other intentional action is necessary to achieve protection of the vehicle other than removing the key from the ignition. The PASS-Key devices are activated in the same manner. GM believes that, considering the electrical and mechanical challenges associated with defeating the Passlock, this antitheft device will be at least as effective as its PASS-Key devices.

The following GM car lines have the Passlock device as standard equipment and have been granted a full exemption from the parts-marking requirements: the Chevrolet Cavalier, beginning with MY 1997 (see 61 FR 12132, March 25, 1996), the Pontiac Sunfire, beginning with MY 1998 (see 62 FR 20240, April 25, 1997), the Oldsmobile Alero, beginning with MY 1999 (see 63 FR 24587, May 4, 1998) and the Pontiac Grand Am, beginning with MY 2000 (see 63 FR 68503, December 11, 1998). GM stated that the theft rates, as reported by the National Crime Information Center, are lower for GM models equipped with PASS-Key-like devices which have been granted exemptions from the parts-marking requirements than theft rates for similar, earlier models that have been parts-marked. Therefore, GM concludes that the PASS-Key-like devices are more effective in deterring motor vehicle theft than the parts-marking requirements of 49 CFR Part 541. GM also concluded that based on the system performance of PASS-Key-like devices on other GM models, and the similarity of design and functionality of the Passlock device on the Chevrolet Malibu to the PASS-Key device, it believes that the agency should determine that the proposed device will be at least as effective in deterring theft as the parts-marking requirements of 49 CFR Part 541.

Based on comparison of the reduction in theft rates of Chevrolet Corvettes using a passive antitheft device and an audible/visible alarm with the reduction in theft rates for the Chevrolet Camaro and Pontiac Firebird models equipped with a passive antitheft device without an alarm, GM believes that an alarm or similar attention attracting device is not necessary and does not compromise the antitheft performance of these systems.

The agency notes that the reason that the vehicle lines whose theft data GM cites in support of its petition received only a partial exemption from parts-marking was that the agency did not believe that the antitheft device on these vehicles (PASS-Key and PASS-Key II) by itself would be as effective as parts-marking in deterring theft because it lacked an alarm system. On that basis, it decided to require GM to mark the vehicle's most interchangeable parts (the engine and transmission), as a supplement to the antitheft device. Like those earlier antitheft devices GM used, the new Passlock device on which this petition is based also lacks an alarm system. Accordingly, it cannot perform one of the functions listed in 49 CFR Part 543.6(a)(3), that is, it cannot call attention to unauthorized attempts to enter or move the vehicle.

After deciding those petitions, however, the agency obtained theft data that show declining theft rates for GM vehicles equipped with either version of the PASS-Key system. Based on that data, it concluded that the lack of a visible or audible alarm had not prevented the antitheft device from being effective protection against theft and granted three GM petitions for full exemptions for car lines equipped with the PASS-Key II device. The agency granted in full the petition for the petition for the Buick Riviera and Oldsmobile Aurora car lines beginning with model year 1995, (see 58 FR 44874, August 25, 1993); the Chevrolet Lumina and Buick Regal car lines beginning with model year 1996, (see 60 FR 25938, May 15, 1995); and, the petition for the Cadillac Seville car line beginning with model year 1998, (see 62 FR 20058, April 24, 1997). In all three of those instances, the agency concluded that a full exemption was warranted because PASS-Key II had shown itself as likely as parts-marking to be effective protection against theft despite the absence of a visible or audible alarm.

The agency concludes that, given the similarities between the Passlock device and the PASS-Key and PASS-Key II systems, it is reasonable to assume that Passlock, like those systems, will be as effective as parts-marking in deterring theft. The agency believes that the device will provide the other types of performance listed in 49 CFR 543.6(a)(3): Promoting activation; preventing defeat or circumvention of the device by unauthorized persons; preventing operation of the vehicle by unauthorized entrants; and ensuring the reliability and durability of the device.

As required by 49 U.S.C. 33106 and 49 CFR 543.6(a)(4) and (5), the agency finds that GM has provided adequate reasons for its belief that the antitheft device will reduce and deter theft. This conclusion is based on the information GM provided about its antitheft device. This confidential information included a description of reliability and functional tests conducted by GM for the antitheft device and its components. GM requested confidential treatment for some of the information and attachments submitted in support of its petition. In a letter to GM dated February 28, 2000, the agency granted the petitioner's request for confidential treatment of most aspects of its petition.

For the foregoing reasons, the agency hereby grants in full GM's petition for exemption for the MY 2001 Chevrolet Malibu car line from the parts-marking requirements of 49 CFR Part 541.

If GM decides not to use the exemption for this line, it must formally

notify the agency, and, thereafter, must fully mark the line as required by 49 CFR 541.5 and 541.6 (marking of major component parts and replacement parts).

NHTSA notes that if GM wishes in the future to modify the device on which this exemption is based, the company may have to submit a petition to modify the exemption. § 543.7(d) states that a Part 543 exemption applies only to vehicles that belong to a line exempted under this part and equipped with the antitheft device on which the line's exemption is based. Further, § 543.9(c)(2) provides for the submission of petitions ''to modify an exemption to permit the use of an antitheft device similar to but differing from the one specified in that exemption.''

The agency did not intend in drafting Part 543 to require the submission of a modification petition for every change to the components or design of an antitheft device. The significance of many such changes could be *de minimis.* The agency wishes to minimize the administrative burden which § 543.9(c)(2) could place on exempted vehicle manufacturers and itself. Therefore, NHTSA suggests that if the manufacturer contemplates making any changes the effects of which might be characterized as *de minimis,* it should consult the agency before preparing and submitting a petition to modify.

Authority: 49 U.S.C. 33106; delegation of authority at 49 CFR 1.50.

Issued on: March 27, 2000.

Stephen R. Kratzke,

Acting Associate Administrator for Safety Performance Standards.

[FR Doc. 00–7956 Filed 3–30–00; 8:45 am]

BILLING CODE 4910–59–P

DEPARTMENT OF TRANSPORTATION

Research and Special Programs Administration

[Docket No. RSPA–00–7092 (PDA–22(R)]

Application by American Trucking Associations, Inc. for a Preemption Determination as to New Mexico Requirements for the Transportation of Liquefied and Compressed Gases

AGENCY: Research and Special Programs Administration (RSPA).

ACTION: Public Notice and Invitation to Comment.

SUMMARY: Interested parties are invited to submit comments on an application by the American Trucking Associations, Inc. for an administrative determination whether Federal hazardous materials transportation law preempts certain New Mexico requirements concerning the transportation of liquefied petroleum gas and compressed natural gas within New Mexico.

DATES: Comments received on or before May 15, 2000, and rebuttal comments received on or before June 29, 2000 will be considered before an administrative ruling is issued by RSPA's Associate Administrator for Hazardous Materials Safety. Rebuttal comments may discuss only those issues raised by comments received during the initial comment period and may not discuss new issues.

ADDRESSES: The application and all comments received may be reviewed in the Dockets Office, U.S. Department of Transportation, Room PL–401, 400 Seventh Street, SW, Washington, DC 20590–0001. The application and all comments are also available on-line through the home page of DOT's Docket Management System at ''http://dms.dot.gov.''

Comments must refer to Docket No. RSPA–00–7092 and may be submitted to the Dockets Office either in writing or electronically. Send three copies of each written comment to the Dockets Office at the above address. If you wish to receive confirmation of receipt of your written comments, include a self-addressed, stamped postcard. To submit comments electronically, log onto the Docket Management System website at ''http://dms.dot.gov'' and click on ''Help & Information'' to obtain instructions.

A copy of each comment must also be sent to: (1) Mr. Paul M. Bomgardner, Director, Hazardous Materials Policy, American Trucking Associations, Inc., 2200 Mill Road, Alexandria, Virginia 22314–4677; and (2) Mr. Michael Chapman, Chairman, Construction Industries Commission, P.O. Box 25101, Santa Fe, New Mexico 87504. A certification that a copy has been sent to these persons must also be included with the comment. (The following format is suggested: ''I certify that copies of this comment have been sent to Mr. Bomgardner and Mr. Chapman at the addresses specified in the **Federal Register.**'')

A list and subject matter index of hazardous materials preemption cases, including all inconsistency rulings and preemption determinations issued, are available through the home page of RSPA's Office of the Chief Counsel at ''http://rspa-atty.dot.gov.'' You may ask for a paper copy of this list and index by contacting Nancy Machado by mail or by telephone as provided below under the heading **FOR FURTHER INFORMATION CONTACT.**

FOR FURTHER INFORMATION CONTACT: Nancy Machado, Office of the Chief Counsel, Research and Special Programs Administration, 400 Seventh Street, SW, Washington DC 20590–0001 (Tel. No. 202–366–4400).

SUPPLEMENTARY INFORMATION:

I. Application for a Preemption Determination

The American Trucking Associations, Inc. (ATA) has applied for a determination that Federal hazardous material transportation law (federal hazmat law), 49 U.S.C. 5101 *et seq.,* preempts certain requirements contained in the State of New Mexico's 1978 ''LPG and CNG Act,'' 5 New Mexico Statutes Annotated (NMSA) chapter 70, article 5, and in the corresponding regulations in the New Mexico Construction Industries Division Liquefied Petroleum Gas Standards, 19 New Mexico Annotated Code (NMAC), chapter 15, part 4. ATA asserts that the New Mexico requirements at issue apply to interstate carriers transporting liquefied petroleum gases and liquefied natural gases within New Mexico.

The test of ATA's application, a list of the exhibits to the application, and ATA's March 15, 2000 Addendum to Application are set forth in Appendix A to this notice. A paper copy of the exhibits to ATA's application (which have been placed in the public docket) will be provided at no cost upon request to Nancy Machado, at the address and telephone number set forth above under the heading ''For Further Information Contact.''

In the application for preemption, ATA challenges:

(1) NMSA section 70–5–7 (''Requiring competent employees in transporting, dispensing, installation, service or repair'') and the corresponding regulations at 19 NMAC 15.4.9.1 through 15.4.9.5 (''Examination''), 19 NMAC 15.4.15.13 (''Licensing examination fee''), and 19 NMAC 15.4.15.14 (''License re-examination fee'').

NMSA section 70–5–7 states,

> The [New Mexico Liquefied Petroleum and Compresses Gas] Bureau may require each person, firm, or corporation that transports or dispenses LP gas * * * to have all persons who perform these activities pass an appropriate examination based on the safety requirements of the [Construction Industries] commission.

19 NMAC 15.4.9.1 states,

> All personnel whose duties require that they transport or dispense LP Gas shall prove by passing an examination, as required by the [New Mexico Liquefied Petroleum and Compressed Gas] Bureau that they are familiar with minimum safety standards and

practices with regard to handling of LP Gas. LP Gas may not be dispensed by any person who has not passed the examination by the Bureau.

19 NMAC 15.4.9.2 and 15.4.9.5 relate to identification cards for those who successfully pass the examination, to identification card annual renewal, and to re-examination requirements. 19 NMAC 15.4.15.13 and 19 NMAC 15.4.15.14 impose a $25 fee for license examinations and a $25 fee for license re-examinations.

ATA asserts that the New Mexico Liquefied Petroleum and Compressed Gas Bureau (''Bureau'') requires any person who operates, loads, or unloads an LP gas transport vehicle, including drivers in interstate commerce who are domiciled outside of the state, to take a safety examination at a facility located in New Mexico before being allowed to perform LP gas related-functions within the state. ATA contends that compliance with the New Mexico examination requirements imposes costs and administrative burdens on transporters, creates confusion, reduces compliance, and decreases safety. Furthermore, ATA argues that the New Mexico examination requirements are in addition to the HMR training and testing requirements at 49 CFR part 172 Subpart H and 49 CFR 177.816, present an obstacle to the objectives of the HMR, and are preempted under federal hazmat law.

(2) NMSA section 70–5–9(A) (''Annual license fees; inspection fees''), NMSA 70–5–10 (''Revenue; suspense fund''), and the corresponding regulations at 19 NMAC 15.4.15.1 (''Wholesale sale or delivery of LP Gas'') and 19 NMAC 15.4.15.12 (''Annual renewal fee per qualifying party identification card'').

Specifically, ATA states that, under 19 NMAC 15.4.15.1, interstate carriers must pay an annual flat license fee of $125 to conduct the wholesale sale or delivery of LP gas in New Mexico. NMSA section 70–5–9(A) indicates that the fees are intended to defray the state's costs to administer the laws relating to the LP gas industry. In addition, when the motor carrier pays its annual $125 license fee, 19 NMAC 15.4.15.12 requires that it also pay a $10 annual identification care renewal fee for each of its drivers who has successfully completed the state's safety examination. Finally, ATA notes that NMSA section 70–5–10 requires the state to deposit the fees collected under the provisions of the LPG and CNG Act into the state general fund.

ATA argues in its application that New Mexico's $125 annual license fee and $10 annual identification care renewal fee are flat fees that discriminate against interstate carriers. Specifically, ATA argues that the fees place a disproportionate share of the costs of administering New Mexico's LP Gas program on interstate carriers how have less of presence in the state than intrastate carriers. Consequently, ATA argues that the fees are unfair, violate the commerce clause, and are preempted under Federal hazmat law. Additionally, ATA argues that the fees are preempted because they are deposited in the state general fund and are not earmarked for hazardous materials transportation purposes.

(3) NMSA Section 70–5–9(C) (''Annual license fees; inspection fees'') and the corresponding regulations at 19 NMAC 15.4.10.1 (''Annual inspections'') and 19 NMAC 15.4.14.3(C) (''LP Gas Visual Cargo Tank and Equipment Inspection Form'' and ''Re-inspection of Cargo Tank and Equipment and additional charge for re-inspection'').

NMSA section 70–5–9(C) requires a reasonable inspection fee to be paid to the Bureau for the safety inspection of the LP gas equipment on each vehicular unit used for transportation of LP gas in bulk quantities. 19 NMAC 15.4.10.1 requires that the Bureau conduct annual inspections of the safety equipment on each vehicular unit used for transportation of LP gas in bulk quantities. 19 NMAC 15.4.14.3(C) assesses a $37.50 fee for the safety inspection and a $37.50 fee for re-inspection.

ATA asserts that there is no written process that outlines the means of obtaining this safety inspection from the Bureau. ATA contends that, in practice, an interstate carrier has to present each of its LP gas trailers to inspectors in New Mexico at a preset date and location, regardless of the fact that the carrier's principal place of business may be in another state. Furthermore, ATA argues that under New Mexico's regulations, an interstate carrier must either take a vehicle out of service or vary its route when loaded in order to accommodate the inspection, thus causing unnecessary delays in the transportation of hazardous materials. ATA's application contains the affidavit of an interstate carrier executive who states that twice his company has tried out been unable to schedule a vehicle inspection in time to make a delivery into or through New Mexico. Also, ATA submits that motor carriers are already subject to Federal annual and random roadside inspections. Consequently, ATA argues that New Mexico's annual inspection is redundant, causes unnecessary delays, and is preempted under Federal hazmat law.

II. Federal Preemption

Section 5125 of Title 49 U.S.C. contains the preemption provisions that are relevant to ATA's application. Subsection (a) provides that—in the absence of a waiver of preemption by DOT under § 5125(e) or specific authority in another Federal law—a requirement of a State, political subdivision of a State, or Indian tribe if preempted if:

(1) Complying with a requirement of the State, political subdivision or tribe and a requirement of this chapter or a regulation issued under this chapter is not possible; or

(2) The requirement of the State, political subdivision, or Indian tribe, as applied or enforced, is an obstacle to the accomplishing and carrying out this chapter or a regulation prescribed under this chapter.

These two paragraphs set forth the ''dual compliance'' and ''obstacle'' criteria which RSPA had applied in issuing inconsistency rulings prior to 1990, under the original preemption provision in the Hazardous Materials Transportation Act (HMTA). Pub. L. 93–633 § 112(a), 88 Stat. 2161 (1975). The dual compliance and obstacle criteria are based on U.S. Supreme Court decisions on preemption. *Hines* v. *Davidowitz,* 312 U.S. 52 (1941); *Florida Lime & Avocado Growers, Inc.* v. *Paul,* 373 U.S. 132 (1963); *Ray* v. *Atlantic Richfield, Inc.,* 435 U.S. 151 (1978).

Subsection (b)(1) of 49 U.S.C. 5125 provides that a non-Federal requirement concerning any of the following subjects, that is not ''substantively the same as'' a provision of federal hazmat law or a regulation prescribed under that law, is preempted unless it is authorized by another Federal law or DOT grants a waiver of preemption:

(A) The designation, description, and classification of hazardous material.

(B) The packing, repacking, handling, labeling, marking, and placarding of hazardous material.

(C) The preparation, execution, and use of shipping documents related to hazardous material and requirements related to the number, contents, and placement of those documents.

(D) The written notification, recording, and reporting of the unintentional release in transportation of hazardous material.

(E) The design, manufacturing, fabricating, marking, maintenance, reconditioning, repairing, or testing of a packaging or a container represented, marked, certified, or sold as qualified for use in transporting hazardous material.

To be ''substantively the same,'' the non-Federal requirement must ''conform[] in every significant respect to the Federal requirement. Editorial and other similar de minimis changes are permitted.'' 49 CFR 107.202(d).

Subsection (g)(1) of 49 U.S.C. 5125 provides that a State, political subdivision, or Indian tribe may impose a fee related to transporting hazardous material only if the fee is fair and used for a purpose related to transporting hazardous material, including enforcement and planning, developing, and maintaining a capability for emergency response. RSPA has found that a fee is fair if it is: (a) based on a fair approximation of use of state facilities; (b) not excessive in relation to benefits conferred; and (c) does not discriminate against interstate commerce. Preemption Determination (PD)–21(R), 64 FR 54474, 54478 (Oct 6, 1999), citing *Evansville-Vanderburgh Airport Authority* v. *Delta Airlines, Inc.,* 405 U.S. 707, 717, 92 S Ct. 1349, 1355 (1972) and *Northwest Airlines, Inc.* v. *Kent,* 510 U.S. 355, 367–68, 114 S. Ct. 855, 864 (1994). If a fee is not fair or is not used for hazardous materials transportation purposes, the fee is preempted under federal hazmat law. *See* PD–21(R) at 54478 and PD–9(R), 60 FR 8773, 8782 (Feb. 15, 1995).

The preemption provisions in 49 U.S.C. 5125 carry out Congress's view that a single body of uniform Federal regulations promotes safety in the transportation of hazardous materials. In considering the HMTA, the Senate Commerce Committee ''endorse[d] the principle of preemption in order to preclude a multiplicity of State and local regulations and the potential for varying as well as conflicting regulations in the area of hazardous materials transportation.''

S. Rep. No. 1102, 93rd Cong. 2nd Sess. 37 (1974). When it amended the HMTA in 1990, Congress specifically found that:

(3) Many States and localities have enacted laws and regulations which vary from Federal laws and regulations pertaining to the transportation of hazardous materials, thereby creating the potential for unreasonable hazards in other jurisdictions and confounding shippers and carriers which attempt to comply with multiple and conflicting registration, permitting, routing, notification, and other regulatory requirements,

(4) Because of the potential risks to life, property, and the environment posed by unintentional releases of hazardous materials, consistency in laws and regulations governing the transportation of hazardous materials is necessary and desirable,

(5) In order to achieve greater uniformity and to promote the public health, welfare, and safety at all levels, Federal standards for regulating the transportation of hazardous materials in intrastate, interstate, and foreign commerce are necessary and desirable.

Pub. L. 101–615 § 2,104 Stat. 3244. A Federal Court of Appeals has found that uniformity was the ''linchpin'' in the design of the HMTA, including the 1990 amendments that expanded the original preemption provisions. *Colorado Pub. Util. Comm'n* v. *Harmon,* 951 F.2d 1571, 1575 (10th Cir. 1991). (In 1994, Congress revised, codified and enacted the HMTA ''without substantive change,'' at 49 U.S.C. Chapter 51. Pub. L. 103–272, 108 Stat. 745.)

III. Preemption Determinations

Under 49 U.S.C. 5125(d)(1), any directly affected person may apply to the Secretary of Transportation for a determination whether a State, political subdivision or Indian tribe requirement is preempted. The Secretary of Transportation has delegated authority to make determinations of preemption that concern highway routing to FMCSA and those concerning all other hazardous materials transportation issues to RSPA. 49 CFR 1.53(b) and 1.73(d)(2) (as added October 9, 1999, 64 FR 56720, 56721 [Oct. 19, 1999], and revised January 1, 2000, 65 FR 220,221 [Jan. 4, 2000]). Because ATA's application concerns non-highway routing issues, RSPA's Associate Administrator for Hazardous Materials Safety will address the issues raised in ATA's application.

Section 5125(d)(1) requires that notice of an application for a preemption determination be published in the **Federal Register**. Following the receipt and consideration of written comments, RSPA will publish its determination in the **Federal Register**. *See* 49 CFR 107.209(d). A short period of time is allowed for filing of petitions for reconsideration. 49 CFR 107.211. Any party to the proceeding may seek judicial review in a Federal district court. 49 U.S.C. 5125(f).

Preemption determinations do not address issues of preemption arising under the Commerce Clause, the Fifth Amendment or other provisions of the Constitution or under statutes other than the Federal hazardous material transportation law unless it is necessary to do so in order to determine whether a requirement is authorized by another Federal law, address, ''fairness'' of fees, or interpret relevant statutory language. A State, local or Indian tribe requirement is not authorized by another Federal law merely because it is not preempted by another Federal statute. *Colorado Pub. Util. Comm'n* v. *Harmon,* above, 951 F.2d at 1581 n.10.

In making preemption determinations under 49 U.S.C. 5125(d), RSPA is guided by the principles and policies set forth in Executive Order No. 13132, entitled ''Federalism'' (64 FR 43255 (August 4, 1999). Section 4(a) of that Executive Order authorizes preemption of State laws only when a statute contains an express preemption provision, there is other clear evidence that Congress intended to preempt State law, or the exercise of State authority directly conflicts with the exercise of Federal authority. Section 5125 contains express preemption provisions, which RSPA has implemented through its regulations.

IV. Public Comments

All comments should be limited to the issue of whether 49 U.S.C. 5125 preempts the New Mexico requirements applicable to the transportation of liquefied petroleum gas and compressed natural gas. Comments should specifically address the preemption criteria detailed in Part II, above, and set forth in detail the manner in which the New Mexico requirements are applied and enforced.

Persons intending to comment should review the standards and procedures governing consideration of applications for preemption determinations set forth at 49 CFR 107.201–107.211.

Issued in Washington, DC on March 27, 2000.

Robert A. McGuire,

Acting Associate Administrator for Hazardous Materials Safety, Research and Special Programs Administration.

Appendix A

American Trucking Associations
Alexandria, VA
January 18, 2000.

Mr. Robert McGuire
Acting Associate Administrator for Hazardous Materials Safety, Research and Special Programs Administration, U.S. Department of Transportation, 400 7th Street, SW, Washington, DC 20590–0001.
Attention: Hazardous Materials Preemption Docket
Re: Application for Preemption Determination in accordance with 49 CFR Part 107, Subpart C. Section 107.203, regarding provisions of New Mexico ''LPG and CNG Act'' (N.M. Stat. Ann. §§ 70–5–1 to 70–5–23 (1998)) and corresponding regulations of the New Mexico Construction Industries Division, Liquefied Petroleum Gas Bureau (Title 19, Chapter 15, Part 4 [19NMAC 15.4]).

Dear Mr. McGuire: The American Trucking Associations, Inc. (''ATA''), with offices located at 2200 Mill Road, Alexandria, VA 22314, is the trade association for the trucking industry.

Together with our affiliated conferences, councils, and state associations, ATA represents over 30,000 motor carriers of all types and sizes throughout the United States. ATA files this application for preemption determination on behalf of our member companies affected by the provisions of the LPG and CNG Act.

ATA is requesting a determination of preemption of certain requirements of the State of New Mexico's 1978 ''LPG and CNG Act'' as found in Chapter 70 Article 5 of the New Mexico Statute Annotated (NMSA 1978 Chapter 70, Article 5) and in the corresponding regulations of the New Mexico Construction Industries Division's Liquefied Petroleum Gas Standards as found in Title 19 Chapter 15, Part 4 of the New Mexico Annotated Code (19NMAC 15.4). Specifically, ATA requests consideration of the following provisions of the NMSA 1978 and 19NMAC:

1. NMSA 1978 70–5–7 (Liquefied Petroleum Gas Handling License)(19 NMAC 15.4.9.1 through 15.4.9.5);
2. NMSA 1978 70–5–9 (New Mexico Liquefied Petroleum Gas Tank Inspection)(19 NMAC 15.4.10.1); and
3. NMSA 70–50–10 (Revenue; Suspense Fund)(19 NMAC 15.4.14.3C, 15.4.15.1., 15.4.15.13, and 15.4.15.14).

As discussed below, certain of the requirements contained in sections of the New Mexico Statute Annotated (NMSA) and the New Mexico Annotated Code (NMAC) regarding transportation of Liquefied Petroleum Gases (LPG) and/or Liquefied Natural Gases (LNG) are obstacles to the accomplishment of the objectives of the Hazardous Materials Transportation Act (HMTA) and the Hazardous Materials Regulations (HMR) and should be preempted according to the provisions of 49 U.S.C. § 5125(a)(2).

I. Background

NMSA 1978 70–5–6–(A) General License states that:

''No person, firm or corporation shall engage in this state * * *, nor shall any person, firm or corporation engage in the manufacture, sale, *transportation,* dispensing or storage of LP gases within this state, * * * without having first obtained from the bureau a license to do so for each main and branch office or businesses operated within the state pursuant to the LPG and CNG Act [this article] [emphasis added].''

19 NMAC 15.4.15.1 (LP–1) *Wholesale Sale or Delivery of LP Gas* states:

''A licensee under this classification is authorized to wholesale, *transport,* and/or deliver gas * * *''

Consequently, motor carriers transporting LPG and CNG in New Mexico must obtain a license from the State to do so and as licensees are then subject to all of the requirements provided for in 19 NMAC 15.4 (Code). These additional requirements go beyond those contained in 49 CFR Parts 100–180 of the Hazardous Materials Regulations (HMR), create confusion, and impose burdens on transporters to such an extent that they are obstacles to the accomplishment of the Hazardous Materials Transportation Act's (HMTA) [49 U.S.C. 5101, *et seq.*] objectives, and should, therefore be preempted.

II. New Mexico Stat. Ann. § 70–5–7 Requiring Competent Employees in Transporting, Dispensing, Installation, Service or Repair and 19 NMAC 15.4.9.1 Examination

New Mexico Stat. Ann. § 70–5–7(A) states:

''The bureau may require each person, firm or corporation that transports or dispenses LP gas or that installs, repairs or services appliances, containers, equipment or piping for the use of LP gas to have all persons who perform these activities pass an appropriate examination based on the safety requirements of the commission.''

19 NMAC 15.4.9.1 *Examination* states:

''All personnel whose duties require that they transport or dispense LG Gas shall prove by passing an examination, as required by the Bureau, that they are familiar with minimum safety standards and practices with regard to handling of LP Gas. LP Gas may not be dispensed by any person who has not passed the examination by the Bureau.''

Under the authority of this provision, the New Mexico Liquefied Petroleum and Compressed Gas Bureau (''Bureau'') requires any person who operates, loads, or unloads an LP gas transport vehicle, including drivers in interstate commerce, to take an examination before being allowed to perform those functions as they relate to LP gas within the State of New Mexico. These tests are scheduled at various times at different locations throughout the State. All applicants for licensure, whether domiciled inside or outside of New Mexico, must take the test at one of the designated locations within the State. Consequently, compliance with the New Mexico testing requirement imposes cost and administrative burdens on transporters, confusion, reduced compliance, and decreased safety would result if transporters faced a multiplicity of such requirements.

The requirement to test at the state level in order to be able to transport, load, or unload LP gas, which is a Division 2.1 Flammable Gas, and therefore a hazardous material, is in addition to the training and testing requirements in the Hazardous Materials Regulations (''HMR'') at 49 CFR Part 172 Subpart H, § 172.702(a) and (d) and § 172.704(2) through (c). While 49 CFR § 172.701 allows states to improse more stringent training requirements, they are permitted to do so only if those requirements do not conflict with the requirements of Part 172 Subpart H and Part 177 § 177.816, and ''[a]*pply only to drivers domiciled in that State*''. New Mexico's requirement for testing is stricter than the training requirements of the HMR and is applied to drivers that are domiciled outside of New Mexico. It, therefore, represents an obstacle to accomplishing the full purposes and objectives of the HMTA and must be preempted.

The New Mexico requirement for motor vehicle operators loading, unloading or transporting LP gas is similar in nature to the State of Maryland requirement that was preempted by the Research and Special Programs Administration (RSPA) in PD–7(R), 59 *FR* 28913, 28919 (June 3, 1994) (noting that ''operators potentially would be subject to numerous sets of training requirements, with resulting confusion, cost and paperwork burdens,'' RSPA found that training requirements as applied to ''operators not domiciled in Maryland'' were an ''obstacle to accomplishing the full objectives and purposes of the HMTA and [were] preempted.''); see also, PD–13(R), 63 *FR* 45283 (August 25, 1998) (preempting requirement that motor vehicle drivers obtain certificate of fitness to be eligible to deliver LPG.)

Because the additional ''testing'' requirement reaches beyond the domiciliaries of the State of New Mexico, NM Stat. Ann. § 70–5–7(A) and 19 NMAC 15.4.9.1 as they apply interstate operators domiciled in other states should be preempted.

III. New Mexico Stat. Ann § 70–5–9 Annual License Fees; Inspection Fees and § 70–5–10 Revenue; Suspense Fund and 19 NMAC 15.4.15.1 LP–1 Wholesale Sale or Delivery of LP Gas and 19 NMAC 15.4.15.12 Annual Renewal Fee Per Qualifying Party Identification Card

New Mexico Stat. Ann, § 70–5–9 (A) states:

''For the purpose of defraying the expenses of administering the laws relating to the use of CNG motor vehicles or the LP gas industry, each person, firm or corporation, at the time of application for a license and annually thereafter on or before December 31 of each calendar year, shall pay the bureau

reasonable license fees as set, classified and defined by the bureau for each operating location.''

Additionally, NM Stat. Ann § 70–5–10 states, regarding fees:

''All fees and money collected under the provisions of the LPG and CNG Act [this article] shall be remitted by the bureau to the director of the division to be deposited in the general fund of the state. The bureau may maintain a ''special suspense fund'' with the division in an amount of one thousand dollars ($1,000) budgeted by the bureau for the purpose of making any necessary refunds. The bureau shall, with the advice of consent of the director of the division, employ inspectors, assistants and other necessary help as may be required to carry out its lawful duties.''

19 NMAC 15.4 *License Classifications, Scopes, and Fees* states:

''License classifications are defined and *annual* license fees are set as follows:

15.1 LP–1 Wholesale sale or delivery of LP Gas: $125.00 A licensee under this classification is authorized to wholesale, transport, and/or deliver gas in vehicular units into or out of any location except that of an ultimate consumer.

15.12 Annual renewal fee per qualifying part) identification card: $10.00.''

Motor carriers who deliver LP gas in New Mexico are in category LP–1 and must pay an annual flat fee of $125.00, plus $10.00 for each ''Qualifying Party Card.'' These fees are then placed into the State's *general fund* and are not earmarked for purposes related to the transportation of hazardous material.

The HMTA provides that a ''State * * * may impose a fee related to transporting hazardous material only if the fee is fair and used for a purpose related to transporting hazardous material * * * '' [49 U.S.C. 5125(g)(1)]. The New Mexico fees fail both requirements.

First, because the fees are annual, flat charges that are unapportioned to the level of a motor carrier's presence or activities in the State, they are structurally discriminatory and violate the Commerce Clause. A state fee that violates the Commerce Clause cannot be considered to be ''fair.'' See, PD–21(R), 64 *FR* 54474 (October 6, 1999) (''Because Tennessee's remedial action fee imposed on hazardous waste transporters is not based on some fair approximation of the use of the facilities and discriminates against interstate commerce, it is not fair and violates 49 U.S.C. 5125(g)(1) and is preempted * * * '').

Flat annual fees, like New Mexico's, discriminate against and impose an undue burden on interstate motor carriers and thus violate the Commerce Clause. The privilege of conducting LPG and CNG transportation in New Mexico is inherently more valuable to intrastate carriers and conduct all of their operations in the State than it is to those carriers that operate predominantly in interstate commerce. Therefore, the practical effect of collecting regulatory costs on a per-company basis is to place a disproportionate share of those cost on interstate motor carriers. ''[I]mposition of [a] flat tax [] for a privilege that is several times more valuable to a local business than it is to its out-of-state competitors is unquestionably discriminatory and thus offends the Commerce Clause.'' *American Trucking Associations, Inc.* v. *Scheiner,* 483 U.S. 266, 296 (1987). Moreover, flat charges, like the New Mexico fees, inevitably expose interstate trucks to duplicative taxation. ''[T]he interstate carrier will be subject to the privilege taxes of several States, even though his entire use of the highways is not significantly greater than that of intrastate operators who are subject to only one privilege tax.'' Scheiner. at 282 (citation omitted).

Flat fees imposed on hazardous materials and hazardous waste haulers have been routinely struck down as violative of the Commerce Clause. See, *American Trucking Associations, Inc.* v. *Secretary of State,* 595 A.2d 1014 (Me. 1991) ($25 per-truck hazardous material transporter annual charge struck down); *American Trucking Associations, Inc.* v. *Secretary of Administration,* 613 NE 2d 95 (Mass. 1993) ($200 per-truck annual hazardous waste transporter fee held unconstitutional); *American Trucking Associations, Inc.* v. *Wisconsin,* 556 N.W.2d 761 (Wis. App. Ct. 1996) ($400 per-company, per-activity hazardous material transporter annual fee found to violate the Commerce Clause).

The New Mexico $125 per-company annual LPG/CNG delivery fee (and associated $10 Qualifying Party Card fee) are unquestionably flat, unapportioned charges that discriminate and burden interstate commerce as discussed above. Accordingly, such charges cannot be considered ''fair'' as contemplated by Section 5125 (g)(1) and must be preempted.

Second, the fees are placed into the State of New Mexico's general fund and are not earmarked for hazardous materials transportation purposes. Although NM Stat. Ann. section 70–5–10 states generally that the Bureau may employ staff to carry out its lawful duties, there is no tracking of fees paid by motor carriers and no assurance that the moneys paid by motor carriers will actually be used for purposes related to hazardous materials transportation, including enforcement and planning, development and maintenance of emergency response capability.

Because the fees collected from transporters as required by 19 NMAC 15.4.15.1 and .15.12 and deposited in the general fund of the State per NM Stat. Ann. section 70–5–10 are not specifically earmarked for those purposes set forth in 49 U.S.C. 5125(g), they should be preempted.

IV. New Mexico Stat. Ann. section 70–5–9 (C) Annual License Fees; Inspection Fees

New Mexico Stat. Ann. section 70–5–9 (C) states:

''In addition, there shall be paid a reasonable fee for the safety inspection, made by a representative of the bureau, of each LP gas bulk storage plant, LP gas liquid transfer facility and of the LP gas equipment on each vehicular unit used for transportation of LP gas in bulk quantities.''

19 NMAC 15.4.10.*1* *Annual Inspections* states:

''There shall be an annual safety inspection, made by an inspector of the Bureau, of each bulk storage plant facility, dispensing station, vehicle fuel dispenser, and cargo container and safety equipment on each vehicular unit used for transportation of LP gas in bulk quantities. Each bulk plant, dispenser, and vehicular unit shall display a current decal showing it has passed the required inspection.''

19 NMAC 15.4.1*4* *Printed Forms, Permits, and Fees* requires in:

.3.C LP Gas Visual Cargo Tank and Equipment Inspection Form, an accompanying fee of $37.50; and for Re-inspection of Cargo Tank Equipment and additional charge for re-inspection a fee of $37.50.

While the statute and Code make reference to ''safety inspections'' of ''LP gas equipment on each vehicular unit used for transportation of LP gas in bulk quantities,'' there is no mention as to the process by which the inspection should be completed. According to one company, though, each LP gas trailer must be presented to inspectors in New Mexico at a preset date and location, regardless of the location of the motor carrier's principal place of business. A fee of $37.50 must be prepaid for each such inspection. See Affidavit of Lloyd Dean, Vice President of Operations, Basin Western, Inc.

ATA is aware that RSPA has, in the past, approved inspections and related fees relative to permits. See PD–13(R), 63 FR 45283, 45286 (approving

inspection and fee where fee covered the cost of conducting the inspection and actually issuing the permit). However, the proliferation of inspection requirements (*e.g.*, in New Orleans, LA; Houston, TX; Nassau County, NY; Broward County, FL; and Cleveland, OH) is alarming and is causing disruptions in motor carrier operations. Because there is a need to either take the vehicle out of service, or vary the route when loaded, in order to accommodate the inspection, there are unnecessary delays in the transportation of hazardous materials.

We believe that RSPA has erred in not considering the impact on the interstate transportation of hazardous materials of multiple jurisdictions requiring fee supported annual inspections. Under the U.S. Supreme Count's ''internal consistency'' test, a law's impact on interstate commerce is examined in the context of its impact if every other jurisdiction imposed an identical requirement. *Oklahoma Tax Comm'n* v. *Jefferson Lines,* 115 S. Ct. 1331, 1338 (1997). There can be little dispute that interstate hazardous materials transporting commerce would come to a halt if every jurisdiction in which a truck operated (perhaps thousands of cities, counties, and states) required that the truck undergo a separate, duplicative fee-supported inspection. If RSPA is concerned about the theoretical nature of the internal consistency analysis, it need look no further than the inspection requirements cited above to assure itself that the burden of cumulative inspections and fees is already occurring.

The multiple inspections and fees a hazardous materials transporting vehicle now faces cannot help but result in unreasonable transportation delays and thus are contrary to the HMR's mandate that shipments of hazardous materials be transported without unnecessary delay (see 49 CFR 177.800(d)).

Motor carriers are already subject to Federal annual and random roadside vehicle inspections according to 49 CFR Part 396 and to inspection, repair and maintenance requirements for cargo tanks in 49 CFR 180.401 through 180.417. Therefore, New Mexico's requirement for safety inspections is redundant, causes unnecessary delay in the transportation of hazardous materials, and should be preempted as an obstacle to the accomplishment of the full purposes and objectives of the HMTA.

V. Conclusion

Based on the information provided in this application, ATA urges RSPA to preempt certain aspects of the State of New Mexico's requirements found in NM Stat. Ann. Chapter 70 Oil and Gas, Article 5 Liquefied and Compressed Gases and in 19 NMAC 15.4 as they relate to:

(1) Examinations for drivers of interstate motor carriers;

(2) Fees for motor carriers regarding permits and inspections; and

(3) Safety inspections of vehicles used to transport LP gas.

Thank you for the opportunity to submit this application. If you have any questions regarding information supplied in this application, please contact the undersigned at: 703–838–1849 (Phone); 703–683–1934 (FAX); or by e-mail at: pbomgard@trucking.org.

VI. Certification of Notice as Required in 49 CFR Part 107 Section 107.205(a).

I certify that a copy of this application has been sent this 18 ''day of January, 2000 to: Mr. Michael Chapman, Chairman, Construction Industries Commission, at P.O. Box 25101, Sante Fe, New Mexico 87504.

Signature

Date:

Respectfully submitted:

Paul M. Bomgardner,

Director, Hazardous Materials Policy, American Trucking Associations, Inc.

Attachments:

Affidavit of: Mr. Lloyd Dean, VP Operations, Basin Western, Inc.

State of New Mexico Construction Industries Division Liquefied Petroleum Gas Standards, Title 19: Chapter 15: Part 4

State of New Mexico Statute Annotated, Article 5. Liquefied and Compressed Gasses, 70–5–1 through 70–5–23, NMSA 1978

List of Exhibits

1. Affidavit of Lloyd Dean.
2. LPG and CNG Act, 5 New Mexico Statutes Annotated Chapter 70, Article 5 (1978).
3. State of New Mexico, Construction Industries Division, Liquefied Petroleum Gas Standards, title 19: Chapter 15: Part 4 (Nov. 15, 1997).

March 15, 2000

From: Paul Bomgardner, Director for Hazardous Materials Policy

To: Nancy Machado, Senior Attorney

Subject: Addendum to Application for Preemption Determination of certain rules of the State of New Mexico

First, I want to thank you for taking the time to review the original application and discussing the issues of importance. I also want to apologize for any confusion that I may have caused through some oversight in the original application. Therefore, I request that this correspondence be added to the file for the purpose of clarification of intent on the part of the American Trucking Associations (ATA).

Following is a listing of the specific sections of both the New Mexico LPG and GNG Act (N.M. Stat. Ann. §§ 70–5–1 through 70–5–23 (1998) and the corresponding regulations of the New Mexico Construction Industries Division, Liquefied Petroleum Gas bureau (Title 19, Chapter 15, Part 4 [19NMAC 15.4]) that are in question:

1. N.M Stat. Ann. § 70–5–7 *Requiring competent employees in transporting, dispensing, installation, service or repair;* as it applies to drivers domiciled in states other than New Mexico.
2. N.M. Stat. Ann. § 70–5–7 *Annual license fees; inspection fees;* as it applies to interstate motor carriers.
3. N.M. Stat. Ann. § 70–5–10 *Revenue; suspense fund;* as it applies to the use of fees collected by the State.
4. 19 NMAC 15.4.9 *Examinations*, .1 through .5; as they apply to drivers domiciled in states other than New Mexico.
5. 19 NMAC 15.4.10 *Annual Inspections*, .1; as it applies to the inspection of equipment (eg. Cargo tanks) operated by interstate motor carriers.
6. 19 NMAC 15.4.14 *Printed Forms, Permits and Fees,* .3.C *LP Gas Visual Cargo Tank and Equipment and Inspection Form $37.50* and *Re-inspection of Cargo Tank and Equipment and additional charge for re-inspection $37.50;* as they apply to inspection and/or re-inspection of equipment operated by interstate motor carriers.
7. 19 NMAC 15.4.15 *License Classifications, Scopes and Fees,* .1 LP–1 *Wholesale sale or delivery of LP Gas $125.00* and .12 *Annual renewal fee per qualifying party identification card $10.00;* as they apply to interstate motor carriers.
8. 19 NMAC 15.4.15 *License Classifications, Scopes and Fees,* .13 *Licensing examination fee $25.00* and .14 *Licensing re-examination fee $25.00*; as they apply to drivers domiciled in states other than New Mexico.

Thank you for this opportunity to clarify ATA's intent. If you need to contact me, please do so at: 703–838–1849 (phone) or *pbomgard@trucking.org* (e-mail)

[FR Doc. 00–7992 Filed 3–30–00; 8:45 am]

BILLING CODE 4910–60–M

DEPARTMENT OF TRANSPORTATION

Surface Transportation Board

[STB Finance Docket No. 33855]

Mohall Railroad, Inc.—Acquisition and Operation Exemption—Line of The Burlington Northern and Santa Fe Railway Company

Mohall Railroad, Inc. (MRI), a noncarrier, has filed a verified notice of exemption under 49 CFR 1150.31 to acquire (by purchase) and operate approximately 42.55 miles of rail line, known as the Mohall Line,[1] owned by The Burlington Northern and Santa Fe Railway Company (BNSF)[2] between milepost 5.25 north of Granville, ND, and milepost 47.8 near Mohall, ND, together with associated spur tracks and sidings.[3]

The purpose of this transaction is to permit MRI to assume responsibility for providing rail service to the two presently active shippers located at Mohall and Lansford, ND, and any other parties desiring rail service by entering into an operating agreement with Northern Plains Railroad (NPR), which currently operates a line of railroad through Lansford. MRI indicates that its acquisition of the Mohall line will not result in significant changes in carrier operations, except to the extent that rail operations will be resumed over lines currently embargoed. MRI states that it will construct a new connection between NPR and the Mohall Line at Lansford, and will undertake to perform the necessary maintenance and rehabilitation work to place the trackage in condition for resumption of safe railroad operations.

MRI reports that it intends to consummate the transaction upon the effective date of the exemption. The earliest the transaction could be consummated was March 13, 2000 (7 days after the exemption was filed).

If the notice contains false or misleading information, the exemption is void *ab initio.* Petitions to revoke the exemption under 49 U.S.C. 10502(d) may be filed at any time. The filing of a petition to revoke will not automatically stay the transaction.

[1] The line is currently embargoed due to track conditions.

[2] MRI states that, on November 22, 1999, an agreement was signed between it and BNSF for the sale of certain assets, rights and obligations for the line and that it will assume full common carrier responsibility and maintenance of the line as soon as the exemption becomes effective and the transaction is closed.

[3] MRI certifies that its projected revenues as a result of this transaction will not exceed those that would qualify it as a Class III rail carrier.

An original and 10 copies of all pleadings, referring to STB Finance Docket No. 33855, must be filed with the Surface Transportation Board, Office of the Secretary, Case Control Unit, 1925 K Street, NW, Washington, DC 20423–0001. In addition, one copy of each pleading must be served on Byron D. Olsen, Felhaber, Larson, Fenlon & Vogt, P.A., 601 Second Avenue South, Suite 4200, Minneapolis, MN 55402.

Board decisions and notices are available on our website at ''WWW.STB.DOT.GOV.''

Decided: March 24, 2000.

By the Board, David M. Konschnik, Director, Office of Proceedings.

Vernon A. Williams,

Secretary.

[FR Doc. 00–7917 Filed 3–30–00; 8:45 am]

BILLING CODE 4915–00–P

DEPARTMENT OF TRANSPORTATION

Surface Transportation Board

[STB Finance Docket No. 33865]

Illinois & Midland Railroad, Inc.—Trackage Rights Exemption—Union Pacific Railroad Company

Union Pacific Railroad Company (UP) has agreed to grant nonexclusive bridge trackage rights to Illinois & Midland Railroad, Inc. (I&M) approximately from milepost 8.9, at the Illinois River Bridge, to milepost 51.0, at Barr, IL, a distance of approximately 42.1 miles.

The transaction is scheduled to be consummated on or after March 20, 2000.

The purpose of the trackage rights is to promote operating efficiencies by providing I&M with an alternate route between Springfield, IL, and UP's Illinois River Bridge.

As a condition to this exemption, any employees affected by the trackage rights will be protected by the conditions imposed in *Norfolk and Western Ry. Co.—Trackage Rights—BN,* 354 I.C.C. 605 (1978), as modified in *Mendocino Coast Ry., Inc.-Lease and Operate,* 360 I.C.C. 653 (1980).

This notice is filed under 49 CFR 1180.2(d)(7). If it contains false or misleading information, the exemption is void *ab initio.* Petitions to revoke the exemption under 49 U.S.C. 10502(d) may be filed at any time. The filing of a petition to revoke will not automatically stay the transaction.

An original and 10 copies of all pleadings, referring to STB Finance Docket No. 33865, must be filed with the Surface Transportation Board, Office of the Secretary, Case Control Unit, 1925 K Street, N.W., Washington, DC 20423–0001. In addition, one copy of each pleading must be served on Rose-Michele Weinryb, Esq., Weiner, Brodsky, Sidman & Kider, P.C., 1350 New York Avenue, N.W., Suite 800, Washington, DC 20005–4797.

Board decisions and notices are available on our website at ''WWW.STB.DOT.GOV.''

Decided: March 27, 2000.

By the Board, David M. Konschnik, Director, Office of Proceedings.

Vernon A. Williams,

Secretary.

[FR Doc. 00–8016 Filed 3–30–00; 8:45 am]

BILLING CODE 4915–00–P

DEPARTMENT OF THE TREASURY

Financial Crimes Enforcement Network; Agency Information Collection Activities; Proposed Collection; Comment Request; Currency Transaction Report

AGENCY: Financial Crimes Enforcement Network (''FinCEN'').

ACTION: Notice.

SUMMARY: To comply with the requirements of the Paperwork Reduction Act of 1995 concerning proposed extensions of information collection requirements, FinCEN is soliciting comments on currency transactions on the Currency Transaction Report (''CTR''), Internal Revenue Service Form 4789.

DATES: Submit written comments by May 30, 2000 to be assured of consideration.

ADDRESSES: Direct all written comments to the Financial Crimes Enforcement Network, Office of Chief Counsel, ATTN: CTR Comments, Suite 200, 2070 Chain Bridge Road, Vienna, VA 22182–2536.

FOR FURTHER INFORMATION CONTACT: Requests for additional information or for a copy of the form should be directed to Therese Wiese, Deputy Assistant Director, Office of Compliance and Regulatory Enforcement, FinCEN at 202–354–6400 or Cynthia L. Clark, Deputy Chief Counsel, FinCEN at 905–3590. A copy of the CTR form can be obtained through the Internet at http://www.treas.gov/fincen/forms.html#4789.

SUPPLEMENTARY INFORMATION: The Bank Secrecy Act, Titles I and II of Public Law 91–508, as amended, codified at 12 U.S.C. 1829b, 12 U.S.C. 1951–1959, and 31 U.S.C. 5311–5314, 5316–5330, authorizes the Secretary of the Treasury, *inter alia,* to issue regulations requiring records and reports that are determined to have a high degree of usefulness in

criminal, tax, and regulatory matters. Regulations implementing Title II of the Bank Secrecy Act (codified at 31 U.S.C. 5311–5314, 5316–5330) appear at 31 CFR part 103. The authority of the Secretary to administer the Bank Secrecy Act regulations has been delegated to the Director of FinCEN.

The Bank Secrecy Act specifically provides the Secretary the authority to issue regulations that require a report when ''a domestic financial institution is involved in a transaction for the payment, receipt, or transfer of United States coins or currency (or other monetary instruments the Secretary of the Treasury prescribes), in an amount, denomination, or amount and denomination, or under circumstances the Secretary prescribes * * *'' 31 U.S.C. 5913(a). The authority of 31 U.S.C. 5313(a) has been implemented through regulations promulgated at 31 CFR 103.22 and through the instructions to the CTR, Internal Revenue Service Form 4789.

Information collected on the CTR is made available, in accordance with strict safeguards, to appropriate criminal law enforcement and regulatory personnel in the official performance of their duties. The information contained is of use in investigations involving international and domestic money laundering, tax evasion, fraud, and other financial crimes.

In accordance with requirements of the Paperwork Reduction Act of 1995, 44 U.S.C. 3506(c)(2)(A), and its implementing regulations, 5 CFR 1320, the following information concerning the collection of information on Form 4789 is presented to assist those persons wishing to comment on the information collection. (The number of respondents has significantly varied each year; the estimates below are based on an average.)

Title: Currency Transaction Report.

Form Number: IRS Form 4789.

OMB Number: 1506–0004.

Description of Respondents: Certain United States financial institutions, other than casinos.

Estimated Number of Respondents: 10,000,000.

Frequency: As required.

Estimate of Burden: Reporting average of 19 minutes per response; recordkeeping average of 5 minutes per response.

Estimate of Total Annual Burden on Respondents: Reporting burden estimate = 3,166,667 hours; recordkeeping burden estimate = 833,333 hours. Estimated combined total of 4,000,000 hours.

Type of Request: Extension, without revision.

FinCEN specifically invites comments on the following subjects: (a) Whether the proposed collection of information is necessary for the proper performance of the mission of FinCEN, including whether the information shall have practical utility; (b) the accuracy of FinCEN's estimate of the burden of the proposed collection of information; (c) ways to enhance the quality, utility, and clarity of the information to be collected; (d) ways to minimize the burden of the collection of information on respondents, including through the use of automated collection techniques or other forms of information technology; and (e) estimate of capital or startup costs of operation, maintenance, and purchase of services to provide information.

Dated: March 27, 2000.

James F. Sloan,

Director, Financial Crimes Enforcement Network.

[FR Doc. 00–8036 Filed 3–30–00; 8:45 am]

BILLING CODE 4820–03–P

Corrections

Federal Register

Vol. 65, No. 63

Friday, March 31, 2000

This section of the FEDERAL REGISTER contains editorial corrections of previously published Presidential, Rule, Proposed Rule, and Notice documents. These corrections are prepared by the Office of the Federal Register. Agency prepared corrections are issued as signed documents and appear in the appropriate document categories elsewhere in the issue.

DEPARTMENT OF DEFENSE

Department of the Army

Proposed Collection; Comment Request

Correction

In notice document 00–6999 appearing on page 15136 in the issue of Tuesday, March 21, 2000, make the following correction:

1. On page 15136, in the second column, in the first paragraph, in the 19th line, after ''information'', add ''collection on repondents, including through the use of automated collection''.

2. On the same page, in the same column, in the **ADDRESSES:** section, in the eighth line, ''Kathleen A. Dillion'' should read ''Kathleen A. Dillon''.

[FR Doc. C0–6999 Filed 3–30–00; 8:45 am]

BILLING CODE 1505–01–D

Federal Register

Friday,
March 31, 2000

Part II

Architectural and Transportation Barriers Compliance Board

36 CFR Part 1194

Electronic and Information Technology Accessibility Standards; Proposed Rule

ARCHITECTURAL AND TRANSPORTATION BARRIERS COMPLIANCE BOARD

36 CFR Part 1194

[Docket No. 2000–01]

RIN 3014–AA25

Electronic and Information Technology Accessibility Standards

AGENCY: Architectural and Transportation Barriers Compliance Board.

ACTION: Notice of proposed rulemaking.

SUMMARY: The Architectural and Transportation Barriers Compliance Board (Access Board) proposes accessibility standards for electronic and information technology covered by section 508 of the Rehabilitation Act Amendments of 1998. Section 508 requires the Access Board to publish standards setting forth a definition of electronic and information technology and the technical and functional performance criteria necessary for accessibility for such technology. Section 508 requires that when Federal agencies develop, procure, maintain, or use electronic and information technology, they shall ensure that the electronic and information technology allows Federal employees with disabilities to have access to and use of information and data that is comparable to the access to and use of information and data by Federal employees who are not individuals with disabilities, unless an undue burden would be imposed on the agency. Section 508 also requires that individuals with disabilities, who are members of the public seeking information or services from a Federal agency, have access to and use of information and data that is comparable to that provided to the public who are not individuals with disabilities, unless an undue burden would be imposed on the agency.

DATES: Comments should be received by May 30, 2000; however, late comments will be considered to the extent practicable.

ADDRESSES: Comments should be sent to the Office of Technical and Information Services, Architectural and Transportation Barriers Compliance Board, 1331 F Street NW., suite 1000, Washington, DC 20004–1111. Comments sent by e-mail will be considered only if they include the full name and address of the sender in the text. E-mail comments should be sent to section508nprm@access-board.gov. Comments will be available for inspection at the above address from 9:00 a.m. to 5:00 p.m. on regular business days.

FOR FURTHER INFORMATION CONTACT: Doug Wakefield, Office of Technical and Information Services, Architectural and Transportation Barriers Compliance Board, 1331 F Street, NW., suite 1000, Washington, DC 20004–1111. Telephone number (202) 272–5434 extension 139 (voice); (202) 272–5449 (TTY). Electronic mail address: wakefield@access-board.gov.

SUPPLEMENTARY INFORMATION:

Availability of Copies and Electronic Access

Single copies of this publication may be obtained at no cost by calling the Access Board's automated publications order line (202) 272–5434, by pressing 2 on the telephone keypad, then 1, and requesting publication S–38 (Electronic and Information Technology Accessibility Standards Notice of Proposed Rulemaking). Persons using a TTY should call (202) 272–5449. Please record a name, address, telephone number and request publication S–38. This document is available in alternate formats upon request. Persons who want a copy in an alternate format should specify the type of format (cassette tape, Braille, large print, or ASCII disk). This document is also available on the Board's Internet site (http://www.access-board.gov/rules/508nprm.htm).

This proposed rule is based on recommendations of the Board's Electronic and Information Technology Access Advisory Committee. The report is available on the Board's Internet site (http://www.access-board.gov/pubs/eitaacrpt.htm).

Background

On August 7, 1998, the President signed into law the Workforce Investment Act of 1998, which includes the Rehabilitation Act Amendments of 1998. Section 508 of the Rehabilitation Act Amendments requires that when Federal agencies develop, procure, maintain, or use electronic and information technology, they shall ensure that the electronic and information technology allows Federal employees with disabilities to have access to and use of information and data that is comparable to the access to and use of information and data by Federal employees who are not individuals with disabilities, unless an undue burden would be imposed on the agency.[1] Section 508 also requires that individuals with disabilities, who are members of the public seeking information or services from a Federal agency, have access to and use of information and data that is comparable to that provided to the public who are not individuals with disabilities.

Section 508 was originally added to the Rehabilitation Act in 1986. It required the Secretary of Education and the Administrator of the General Services Administration to develop and establish guidelines for Federal agencies for electronic and information technology accessibility and required that such guidelines be revised, as necessary, to reflect technological advances or changes.[2] Section 508 also required each Federal agency to comply with the guidelines. However, there was no enforcement mechanism to provide for compliance. The changes to section 508 contained in the Rehabilitation Act Amendments of 1998 were designed to strengthen the previous law.

Access Board Responsibilities

Section 508(a)(2)(A) of the Rehabilitation Act Amendments of 1998 requires the Architectural and Transportation Barriers Compliance Board (Access Board)[3] to publish standards setting forth a definition of electronic and information technology and the technical and functional performance criteria necessary for accessibility for such technology. If an agency determines that meeting these standards, when procuring electronic and information technology, imposes an undue burden, it must explain why meeting these standards creates an undue burden.

The definition of electronic and information technology is required to be

[1] Section 508 does not apply to national security systems, as that term is defined in section 5142 of the Clinger-Cohen Act of 1996 (40 U.S.C. 1452).

[2] In October 1987, the Department of Education and the General Services Administration (GSA) issued section 508 guidelines which addressed management responsibilities and functional performance specifications for input, output, and documentation access to electronic equipment. On January 1, 1991, after receiving further comment from agencies, vendors, and individuals with disabilities, the GSA issued Bulletin C–8 containing these guidelines as amended, in the Federal Information Resources Management Regulations (FIRMR). In 1996 the FIRMR was eliminated.

[3] The Access Board is an independent Federal agency established by section 502 of the Rehabilitation Act (29 U.S.C. 792) whose primary mission is to promote accessibility for individuals with disabilities. The Access Board consists of 25 members. Thirteen are appointed by the President from among the public, a majority of who are required to be individuals with disabilities. The other twelve are heads of the following Federal agencies or their designees whose positions are Executive Level IV or above: The departments of Health and Human Services, Education, Transportation, Housing and Urban Development, Labor, Interior, Defense, Justice, Veterans Affairs, and Commerce; the General Services Administration; and the United States Postal Service.

consistent with the definition of information technology in section 5002(3) of the Clinger-Cohen Act of 1996.[4] (40 U.S.C. 1401(3)). Information technology under that law means ''any equipment or interconnected system or subsystem of equipment, that is used in the automatic acquisition, storage, manipulation, management, movement, control, display, switching, interchange, transmission, or reception of data or information'' by a Federal agency.

In developing its standards, the Access Board is required to consult with various Federal agencies,[5] the electronic and information technology industry, and appropriate public or nonprofit agencies or organizations, including organizations representing individuals with disabilities. The Access Board is also required to periodically review and, as appropriate, amend the standards to reflect technological advances or changes in electronic and information technology. The General Services Administration and the Access Board are required to provide technical assistance to individuals and Federal agencies concerning the requirements of section 508.

Other Section 508 Requirements

The Access Board was required to publish standards by February 7, 2000. For several reasons, the Board has not met that statutory deadline. Because the Board was required to consult with various affected interests, it created a Federal advisory committee. The advisory committee met from October 1998 through May 1999. Since then, the Board has met through an ad hoc group consisting of several Board members and Federal agency representatives to review the committee's recommendations and develop the proposed rule. Additionally, the Board contracted to prepare the regulatory assessment for the proposed rule. After the Board submitted the proposed rule to the Office of Management and Budget (OMB) for review under Executive Order 12866, OMB distributed the proposed rule twice to the Chief Information Officers for review and comment. The Board has also been coordinating its efforts with the Federal Acquisition Regulatory Council. Section 508(a)(3) provides that within six months after the Board publishes its standards, the Federal Acquisition Regulatory Council is required to revise the Federal Acquisition Regulation, and each Federal agency is required to revise the Federal procurement policies and directives under its control to incorporate the Board's standards.[6] The Board expects that the final standards and the revised Federal Acquisition Regulation will be issued at the same time.

Because of the delay in publishing the standards, the Board is considering making the standards effective six months after publication in the **Federal Register**. The Board believes that this action will provide Federal agencies with an opportunity to more fully understand these new requirements and will allow manufacturers of electronic and information technology time to ensure that their products comply with the standards. The Board also believes that this action is consistent with the Congressional intent underlying section 508. As discussed above, Congress provided a six month period between the publication of the Board's standards and the incorporation of the standards in the Federal Acquisition Regulation. This six month period would have allowed Federal agencies to understand the standards and manufacturers time to ensure that their products would be accessible.

Question 1: The Board seeks comment on the advisability of making the standards effective six months after publication in the **Federal Register.** This action would not affect the right of individuals with disabilities to file complaints for electronic and information technology procured after August 7, 2000 since that right is established by the statute.

Section 508(a)(4) provides that if a Federal agency determines that compliance with the standards imposes an undue burden, any documentation by the agency supporting a procurement shall explain why compliance creates an undue burden. Additionally, when it is determined that compliance with the standards imposes an undue burden, the Federal agency shall provide individuals with disabilities with the information and data involved by an alternative means of access that allows the individual to use the information and data.[7]

Section 508(a)(6)(A) states that when the Federal government provides access to the public to information or data through electronic and information technology, a Federal agency is not required to make equipment available or to purchase equipment at a location other than that where the electronic and information technology is provided to the public. Also, specific accessibility-related software or the attachment of specific accessibility-related peripheral devices are not required to be installed at workstations of Federal employees without disabilities.[8]

Section 508(c) provides that by February 7, 1999, each Federal agency shall evaluate the extent to which the electronic and information technology of the agency is accessible to and usable by individuals with disabilities and submit a report containing the evaluation to the Attorney General.

Section 508(d) provides that by February 7, 2000, the Attorney General shall prepare and submit to the President a report containing information on and recommendations regarding the extent to which the electronic and information technology of the Federal government is accessible to and usable by individuals with disabilities.[9] By August 7, 2001, and every two years thereafter, the Attorney General shall submit to the President and Congress a report containing information on and recommendations regarding the state of Federal agency compliance with the requirements of section 508, including actions regarding individual complaints.

Section 508(f) provides that beginning August 7, 2000, any individual with a disability may file a complaint alleging that a Federal agency fails to comply with section 508 in providing accessible electronic and information technology.[10] Complaints shall be filed with the Federal agency alleged to be in noncompliance. The Federal agency receiving the complaint shall apply the complaint procedures established to implement section 504 of the Rehabilitation Act for resolving

[4] The Clinger-Cohen Act was designed to ensure consistency across Federal agencies in the acquisition, use, and disposal of information technology. It requires each Executive agency to establish a process to select, manage, and evaluate the results of their information technology investments; report annually to Congress on progress made toward agency goals; and link information technology performance measures to agency programs.

[5] The Access Board is required to consult with the Secretary of Education, the Administrator of General Services, the Secretary of Commerce, the Chairman of the Federal Communications Commission, the Secretary of Defense, and the head of any other Federal agency that the Access Board determines to be appropriate.

[6] Whenever the Access Board revises its standards, the Council is required to revise the Federal Acquisition Regulation, and each appropriate Federal agency is required to revise its procurement policies and directives within six months to incorporate the revisions.

[7] Section 508(a)(1)(B).

[8] Section 508(a)(6)(B).

[9] On April 2, 1999, the Department of Justice (DOJ) released its self-evaluation materials for section 508. The self-evaluations were required to be submitted to the DOJ by June 15, 1999. The final report was not available prior to the publication of this proposed rule. It will be available through the Department of Justice Section 508 Home Page (http://www.usdoj.gov/crt/508/508home.html).

[10] This provision applies only to electronic and information technology that is procured by a Federal agency on or after August 7, 2000.

allegations of discrimination in a federally conducted program or activity. Under section 504, individuals may also sue an agency in Federal court to correct an alleged violation.

Electronic and Information Technology Access Advisory Committee

This proposed rule is based on recommendations of the Electronic and Information Technology Access Advisory Committee (Committee or EITAAC). The Committee was convened by the Access Board in September 1998 to assist the Board in fulfilling its mandate under section 508.

On September 29, 1998, the Access Board published a notice appointing members to the Committee. 63 FR 51891 (September 29, 1998). Between October 1998 and May 1999, the Committee held 6 meetings, each of two working days in length, during which members worked to develop recommendations for implementing requirements under section 508. In selecting members of the Committee, the Access Board sought to ensure representation from all parties interested in the promulgation of electronic and information technology accessibility standards. The Committee was composed of representatives of the electronic and information technology industry; organizations representing the access needs of individuals with disabilities; and other persons affected by accessibility standards for electronic and information technology. Representatives of Federal agencies, including the departments of Commerce, Defense, Education, Justice, Veterans Affairs, the Federal Communications Commission, and the General Services Administration, served as ex-officio members or observers of the Committee. The following organizations served on the Committee:

American Council of the Blind
American Foundation for the Blind
Arkenstone, Inc.
Association of Access Engineering Specialists
Association of Tech Act Projects
Compaq
Easter Seals
Electronic Industries Alliance
FutureForms
Georgia Institute of Technology
IBM Special Needs Center
Information Technology Industries Council
Meeting the Challenge, Inc.
Microsoft Corporation
NCR Corporation
National Association of the Deaf
National Federation of the Blind
National Industries for the Blind
National Science Foundation
Pitney Bowes
Self Help for Hard of Hearing People, Inc.
Sun Microsystems
Trace Research and Development Center
United Cerebral Palsy Associations
WGBH National Center for Accessible Media
WebABLE! Solutions
World Wide Web Consortium, Web Accessibility Initiative

Each organization selected a principal member and an alternate. The Committee formed several subcommittees and task groups in which alternates and nonmembers were invited to participate. As a result, the actual group which developed the recommendations was broader than the formal membership. The result of the Committee's work was a report containing recommendations to the Access Board for implementing section 508 of the Rehabilitation Act Amendments of 1998. The Committee presented its report to the Board on May 12, 1999. This proposed rule is based primarily on the recommendations of chapters three ''Definitions'', four ''Section 508 Implementation'', and five ''Proposed Standards'' of the Committee report.

Section-by-Section Analysis

This section of the preamble contains a concise summary of the rule which the Access Board is proposing. The text of the proposed rule follows this section.

Subpart A—General

Section 1194.1 Purpose

This section describes the purpose of the standards which is to implement section 508 of the Rehabilitation Act Amendments of 1998. The goal of section 508 is to introduce accessibility features into mainstream electronic and information technology products purchased by the Federal government to reduce the need for individual, customized accommodations and to make those accommodations which are still needed more efficient and easier to implement.

Section 1194.2 Application

This section specifies what electronic and information technology is covered by the standards. Paragraph (a) states the general statutory requirement for electronic and information technology that must comply with the standards unless doing so would result in an undue burden. The term ''undue burden'' is defined at 1194.4, Definitions, and is discussed in the preamble under that section.

By statute, the enforcement provisions of section 508 apply only to products procured on or after August 7, 2000. (See section 508(f)(1)(B)). As a result, Section 508 does not authorize complaints or lawsuits to retrofit electronic and information technology products procured prior to August 7, 2000 to meet these standards. See a further discussion of the application of these standards to web sites maintained, developed, used or procured by the Federal government under 1194.23(c).

Paragraph (a)(1) states the statutory obligation of a Federal agency to make the information and data available by an alternative means when complying with the standards would result in an undue burden. For example, a Federal agency wishes to purchase a computer program that generates maps denoting regional demographics. If the agency determines that it would constitute an undue burden to purchase an accessible version of such a program, the agency would be required to make the information provided by the program available in an alternative means to users with disabilities. In addition, the requirements to make reasonable accommodations for the needs of an employee with a disability and to provide overall program accessibility under section 504 of the Rehabilitation Act also apply.

Paragraph (a)(2) sets forth the statutory requirement for an agency to document any claim of undue burden in a procurement. Such documentation must explain in detail which provision or provisions of this rule imposes an undue burden and the extent of such a burden. The agency should discuss each of the factors elaborated below which are to be considered an undue burden. By statute, the requirement to document an undue burden applies only to procurements.

Paragraph (b) applies this rule to electronic and information technology developed, procured, maintained, or used by an agency directly or used by a contractor pursuant to a contract with an agency. Consistent with section 5002(3)(C) of the Clinger-Cohen Act of 1996 (40 U.S.C. 1452) and as further discussed in 1194.3(b) below, products used by a contractor which are incidental to a contract are not covered by this rule. For example, a Federal agency enters into a contract to have a web site developed for the agency. The contractor uses its own office system to develop the web site. The web site is required to comply with this rule, however, the contractor's office system does not have to comply with these standards.

Paragraph (c) clarifies that procurement of products complying with this part is subject to commercial

availability. That is, an agency is not expected to procure products that have not been developed. Documentation of an undue burden is not required in this case. This section also applies the provisions of this part to products that will be available in time to meet delivery requirements, or are developed by or on behalf of the government. This is based on existing provisions in the Federal Acquisition Regulations (see 48 CFR 2.101, Definitions of Words and Terms: Commercial item, paragraph (b)). For example, an agency may be planning a major software upgrade to be installed in the next year. If advances in technology or performance will be available to render the software compliant in time to meet the installation requirement, the product will be considered commercially available, despite the fact that a compliant version was not available at the time of the original solicitation. Of course, products developed in response to a Government solicitation are expected to be fully compliant.

The determination of commercial availability is to be applied on a provision by provision basis. That is, each provision is judged independently. Agencies cannot claim a product as a whole is not commercially available because it fails to meet some of the applicable provisions of these standards. It must still meet those provisions that are commercially available.

For example, some pagers may be available with a vibrating alert, but no model has voice output. A Federal agency would still be required to purchase the model with the vibrator even though a model with all the features necessary for accessibility may not exist. Similarly, if a software program that meets all of the provisions of 1194.23(b) is not available, but one that meets most of the provisions is (*e.g.*, it does not provide 8 foreground and 8 background colors), the agency must purchase that product that meets most of the applicable software provisions. The software program as a whole is not excused from the standards because a program meeting all of the provisions is not commercially available.

Paragraph (d) explains how each section of this rule is to be applied. In general, the requirements in 1194.21, 1194.23 and 1194.25 are assumed to satisfy the functional performance criteria in 1194.27. Therefore, when evaluating the compliance of any product, first look to compliance with 1194.21, 1194.23 and 1194.25, then apply the performance criteria in 1194.27 to elements or technologies not covered in those sections and to the overall product functions. Where there is overlap, the specific provisions in 1194.21, 1194.23 and 1194.25 prevail over the general provisions in 1194.27.

In developing these standards, the Board considered the issue of when accessibility features must be built-in and when the product need only be compatible, that is, have the ability to add on assistive technology or accessible features in the future as needed. Because the goal of section 508 is to introduce accessibility features into mainstream electronic and information technology, the proposed standards require that the accessibility features be built-in where reasonable and appropriate given the nature of the product and its intended use. For example, the standards require that the accessibility features be built-in for information kiosks because the public cannot be expected to attach an assistive technology device each time the kiosk is used. Because copy machines seldom allow for the loading of special software or the attachment of accessibility related peripherals, the standards require that the accessible features be built-in.

In general, where accessibility features are not built-in, the standards require that the system be compatible to make those accommodations which are still needed more efficient and easier to implement. For example, workstations are subject to the statutory exception that assistive technology devices are not required at workstations of persons without a disability. The standards require that these systems be compatible with the addition of assistive technology on an as needed basis.

The following paragraphs delineate those provisions where accessibility features are required to be built-in and those which permit compatibility in lieu of built-in features.

Section 1194.21 contains general requirements to be applied to all products, regardless of the specific technology involved. For example, the prohibition on using color coding exclusively is applicable to kiosks, web pages, copiers, software applications, or any other product that controls a visual display. The requirements in section 1194.21 pertain to built-in features.

Section 1194.23 provides requirements for specific components, such as keypads, software, web applications, and telecommunications. All but the simplest products will likely have more than one component and the requirements in section 1194.23 are to be applied to each component. For example, the keypad of a single line telephone can generally be made accessible to a person with a visual impairment by having a standard key layout and placing a nib on the five key. The keypad of a multi-line telephone can be made accessible in a similar fashion but the telephone may have visual indicators for availability of different lines and hold status. Each component for which there is a specific provision must be evaluated for compliance with this section.

The requirements in 1194.23(a), (d)(6)–(9), (e) and (f) are written to ensure built-in accessibility of keyboard, keypads and other mechanically operated controls, telecommunications equipment and information kiosks. The requirements in 1194.23(b), (c) and (d)(1)–(5) will ensure that software applications, web pages and certain telecommunications features are compatible with assistive technology.

Section 1194.25 provides requirements for compatibility of products with assistive technology commonly used by individuals with disabilities. Since any specific product cannot necessarily be made accessible to all disabilities, it must be able to accommodate assistive technology. For example, all computers are not expected to be equipped with a refreshable Braille display, but they are expected to be compatible with such equipment. Assistive technology may be part of a reasonable accommodation required by section 501 or section 504 of the Rehabilitation Act in response to a request made by a person with a disability.

Section 1194.27 provides functional performance criteria for overall product evaluation and for technologies or components for which there is no specific requirement under other sections. As in the example of the multi-line telephone discussed above, the keypad has specific requirements under section 1194.23, but the other functions, such as line availability or status, must be evaluated by applying the performance criteria. These criteria are also intended to ensure that the individual accessible components work together to create an accessible product. Section 1194.27(a), (b), (c) and (e) allow for the support of assistive technology to satisfy the criteria, whereas section 1194.27 (d) and (f) are functions that must be built into a product.

Finally, section 1194.31 provides requirements for information, documentation, and support. Products may meet all of the technical requirements of this part, but will not be usable to a person with a disability if information about the accessible features or how to use them is not available in a format the individual can use. Obviously, the format is critical to

usability, since providing Braille to a person who does not read Braille is worthless, as is providing enhanced audio to a person who is deaf and does not rely on any residual hearing.

Section 1194.3 General Exceptions

This section provides general exceptions from the standards. Paragraph (a) provides an exception for telecommunications or information systems operated by agencies, the function, operation, or use of which involves intelligence activities, cryptologic activities related to national security, command and control of military forces, equipment that is an integral part of a weapon or weapons system, or systems which are critical to the direct fulfillment of military or intelligence missions. This exception is statutory under section 508 and is consistent with a similar exception in section 5142 of the Clinger-Cohen Act of 1996 (40 U.S.C. 1452). This exception does not apply to a system that is to be used for routine administrative and business applications (including payroll, finance, logistics, and personnel management applications). For example, software used for payroll, word processing software used for production of routine documents, ordinary telephones, copiers, fax machines, and web applications must still comply with the standards even if they are developed, procured, maintained, or used by an agency engaged in intelligence or military activities. On the other hand, a computer designed to provide early missile launch detection would not be subject to these standards.

Paragraph (b) provides an exception for electronic and information technology that is acquired by a contractor incidental to a Federal contract. That is, the products a contractor develops, procures, maintains, or uses which are not specified as part of a contract with a Federal agency are not required to comply with this part. For example, a consulting firm that enters into a contract with a Federal agency to produce a report is not required to procure accessible computers and word processing software to produce the report regardless of whether those products were used exclusively for the government contract or used on both government and non-government related activities. On the other hand, if such products were specified as contract deliverables (*i.e.*, they would become government property at the end of the contract) or if a Federal agency purchased the products to be used by the contractor as part of the project, those products would have to meet the standards. Similarly, if a firm is contracted to develop a web site for a Federal agency, the web site created must be fully compliant with this part, but the firm's own web site would not be covered. This exception is consistent with a similar exception in section 5002(3)(C) of the Clinger-Cohen Act of 1996 (40 U.S.C. 1452).

Paragraph (c) clarifies that, except as required to comply with these standards, this part does not require the installation of specific accessibility-related software or the attachment of an assistive technology device at a workstation of a Federal employee who is not an individual with a disability. Specific accessibility related software means software which has the sole function of increasing accessibility for persons with disabilities to other software programs (*e.g.*, screen magnification software). The purpose of section 508 and these standards is to build as much accessibility as is reasonably possible into general products developed, procured, maintained, or used by agencies. However, it is not expected that every computer will be equipped with a refreshable Braille display, or that every software program will have a built-in screen reader. Such assistive technology may be required as part of a reasonable accommodation for an employee with a disability or to provide program accessibility. To the extent that such technology is necessary, products covered by this part must not interfere with the operation of the assistive technology.

Paragraph (d) specifies that when agencies provide access to information or data to the public through electronic and information technology, agencies are not required to make equipment owned by the agency available for access and use by individuals with disabilities at a location other than that where the electronic and information technology is provided to the public, or to purchase equipment for access and use by individuals with disabilities at a location other than that where the electronic and information technology is provided to the public. For example, if an agency provides an information kiosk in a Post Office, a means to access the kiosk information for a person with a disability need not be provided in any location other than at the kiosk itself.

Paragraph (e) states that compliance with this part does not require a fundamental alteration in the nature of a product or its components. Fundamental alteration means a change in the fundamental characteristic of the product, not merely a cosmetic or aesthetic change. For example, an agency intends to procure pocket-sized pagers for their field agents. Adding a large display to a small pager may fundamentally alter the device by significantly changing its size to such an extent that it no longer meets the purpose for which it was intended, that is to fit in a shirt or jacket pocket.

Section 1194.4 Definitions

Accessible: The term accessible is defined in terms of compliance with the standards in this part, as is common with other accessibility standards. That is, if a product complies with the standards in this part, it is accessible; if it does not comply, it is not accessible.

Agency: Section 508 applies to any Federal department or agency, including the United States Postal Service (section 508(a)(1)(A)). The term ''agency'' as used in this rule includes all of these entities.[11]

Alternate Formats and Alternate Modes: These terms are given the same meaning here as in the Board's Telecommunications Act Accessibility Guidelines (36 CFR part 1193). Certain product information is required to be made available in alternate formats to be usable by individuals with various disabilities. Common forms of alternate formats are Braille, large print, ASCII text, and audio cassettes. Alternate modes are different means of providing information to users of products including product documentation and information about the status or operation of controls. For example, if product instructions are provided on a video cassette, captioning would be required.

Assistive Technology: Assistive technology means any item, piece of equipment, or system, whether acquired commercially, modified, or customized, that is commonly used to increase, maintain, or improve functional capabilities of individuals with disabilities. The definition is derived from a definition of assistive technology in the Assistive Technology Act of 1998 (29 U.S.C. 3001 *et seq.*).

Examples of assistive technology include, but are not limited to, (1) Screen readers which allow persons who cannot see a visual display to either hear screen content or read the content in Braille; (2) a specialized one-handed keyboard which allows an individual to operate a computer with only one hand; and (3) specialized audio amplifiers that allow persons with limited hearing to receive an enhanced audio signal.

[11] A government depository library is not considered a Federal agency.

Electronic and Information Technology: This is the statutory term for the products intended to be covered by the standards in this part. The statute explicitly required the Board to define this term, and required that the definition be consistent with the definition of ''information technology'' in the Clinger-Cohen Act of 1996 (40 U.S.C. 1401(3)). Therefore, this definition includes information technology as defined by that Act, as well as any equipment or interconnected system or subsystem of equipment, that is used in the creation, conversion, or duplication of data or information.

Electronic and information technology includes, but is not limited to, telecommunications products (such as telephones), information kiosks and transaction machines, web sites, multimedia, and office equipment such as copiers and fax machines. Consistent with the Federal Acquisition Regulations,[12] electronic and information technology does not include any equipment that contains imbedded information technology that is used as an integral part of the product, but the principal function of which is not the acquisition, storage, manipulation, management, movement, control, display, switching, interchange, transmission, or reception of data or information. For example, HVAC (heating, ventilation, and air conditioning) equipment such as thermostats or temperature control devices, and medical equipment where information technology is integral to its operation, are not information technology.

Information Technology: The definition of information technology is the same as the definition of information technology in section 5002(3) of the Clinger-Cohen Act. Information technology includes computers, ancillary equipment, software, firmware and similar procedures, services (including support services), and related resources.

Operable Controls: Operable controls are those components of a product that require manipulation or contact for operation of the device. Controls include on/off switches, buttons, dials and knobs, mice, keypads and other input devices, copier paper trays (both for inserting paper to be copied and retrieving finished copies), coin and card slots, card readers, and similar components. Operable controls do not include voice-operated controls.

[12] 48 CFR Chapter 1, part 2, section 2.101 Definitions Information Technology (c).

Product: Product is used as a shorthand for electronic and information technology throughout this part.

TTY: The term TTY is defined to be consistent with the Board's ADA Accessibility Guidelines (36 CFR part 1191) and Telecommunications Act Accessibility Guidelines.

Telecommunications: This term is defined consistent with the Board's Telecommunications Act Accessibility Guidelines and the definition of telecommunications in the Telecommunications Act (47 U.S.C. 153).

Undue Burden: The term ''undue burden'' is based on caselaw interpreting section 504 of the Rehabilitation Act (*Southeastern Community College* v. *Davis,* 442 U.S. 397 (1979)), and has been included in agency regulations issued under section 504 since the *Davis* case. See, *e.g.,* 28 CFR 39.150. The term ''undue burden'' is also used in Title III of the Americans with Disabilities Act. (ADA), 42 U.S.C. 12182(b)(2)(A)(iii). The legislative history of the ADA states that the term ''undue burden'' is derived from section 504 and the regulations thereunder, and is analogous to the term ''undue hardship'' in Title I of the ADA, which Congress defined as ''an action requiring significant difficulty or expense.'' 42 U.S.C. 12111(10)(A). See, H. Rept. 101–485, pt. 2, at 106. The Board has adopted this definition for ''undue burden.''

Title I of the ADA lists factors to be considered in determining whether a particular action would result in an undue hardship. 42 U.S.C. 12111(10)(B)(i)–(iv). Since Title I of the ADA addresses employment, not all of the factors are directly applicable to section 508 except for the financial resources of the covered facility or entity. In determining whether a particular action is an undue burden under section 508, the rule provides that the resources available to an agency or component for which the product is being developed, procured, maintained, or used is a factor to be considered. An agency's entire budget may not be available for purposes of complying with section 508. Many parts of agency budgets are authorized for specific purposes, and/or are provided as grants to non-Federal entities, and are thus not available for other purposes. Because available financial resources vary greatly from one agency to another, what constitutes an undue burden for a smaller agency may not be an undue burden for another, larger agency having more resources to commit to a particular procurement. Each procurement would necessarily be determined on a case-by-case basis.

The Board is considering including two additional factors in the final rule to determine whether an action is an undue burden.

Factor (2): An agency may consider the extent to which a product meeting the standards is compatible with the agency's or component's technology infrastructure, including security, and the difficulty of integrating the accessible product. For example, an agency wishes to contract with a digital cellular provider in order to provide cellular phone service to its employees. The agency's digital cellular network is not compatible with TTYs. Since these two products are incompatible with each other, it will result in an undue burden. The agency would not be prohibited from contracting with the digital provider. However, accommodations for TTY users could be made through an analog cellular phone, if needed. Should compatibility become feasible over time, this no longer would be viewed as an undue burden.

Factor (3): An agency may also consider the functionality needed from the product and the technical difficulty involved in making such a product accessible. For example, an agency needs to purchase a computer assisted design (CAD) software program. The function of the CAD program is to produce visual drawings. Technology is available to produce basic tactile images usable by an employee with a visual impairment, but to apply this technology to a CAD program would be extraordinarily difficult and have limited functionality, making it an undue burden.

Question 2: The Board seeks comment on whether factors (2) and (3) discussed above are appropriate factors for consideration in determining whether an action would be an undue burden under these standards.

Section 1194.5 Equivalent Facilitation

This section allows the use of designs or technologies as alternatives to those prescribed in this part provided that they result in substantially equivalent or greater access to and use of a product for people with disabilities. This provision is not a ''waiver'' or ''variance'' from the requirement to provide accessibility, but a recognition that future technologies may be developed, or existing technologies could be used in a particular way, that could provide the same functional access in ways not envisioned by these standards. In evaluating whether a technology results in ''substantially equivalent or greater access,'' it is the functional outcome,

not the form, which is important. For example, an information kiosk which is not accessible to a person who is blind might be made accessible by having a telephone handset that connects to a computer that responds to touch-tone commands and delivers the same information audibly.

Subpart B—Accessibility Standards

This proposed rule is based primarily on the recommendations of chapter five of the EITAAC report. The proposed rule rearranges and renames sections from the EITAAC report. Although the Board has reorganized the committee's recommendations, the Board believes that the concepts and most of the committee's recommended requirements have been preserved. The generic standards (EITAAC 5.2) are now labeled as functional performance criteria (1194.27). The Board made this change because it believes this group of specifications are yardsticks to use to measure performance as opposed to objective standards. Section 1194.27 contains the functional performance criteria against which all products will be judged. Sections 1194.23 and 1194.25 are the component specific and compatibility standards for accessibility. Where the Board has not included a recommendation from the committee's report it is noted.

Section 1194.21—General Requirements

The requirements under this section are general, because they do not apply to any specific product. For example, the requirements relating to displays apply to any display whether on a computer, a copier, or information kiosk and transaction machine.

Question 3: The Board seeks comment on the current organization of sections 1194.21 and 1194.23. Other ways of organizing functions may be more appropriate. The Board seeks comment on other approaches to organizing functions and requirements that might be easier to understand and implement.

Paragraph (a) provides that color coding shall not be used as the only means of identifying a visual element. This requirement applies to all products, whether web based or free standing office equipment. Relying on color as a singular method for identifying screen elements or controls poses serious problems, not only for people with limited or no vision, but also for those who are color blind. This requirement does not prohibit the use of color to help with component identification. It does however, require that some other method of identification, such as text labels, be combined with the use of color. While this provision is consistent with the recommendations of the advisory committee, the committee also recommended including a similar functional performance requirement. The functional performance criterion was not included in the proposed standards as it was duplicative of this requirement.

Paragraph (b) provides provisions for the physical characteristics of large office equipment including reach ranges and the general physical accessibility of controls and features. A large, free standing copier would be an example of a product addressed by this provision. This requirement is consistent with the recommendations of the advisory committee and is based on the Americans with Disabilities Act Accessibility Guidelines (ADAAG 4.2 Space Allowance and Reach Ranges). Two figures are provided to help explain the application of the provision.

Paragraph (c) provides that flashing visual displays and indicators shall not exceed a frequency of two Hertz. In 1988, the Board sponsored two research projects on visual fire alarms that found that individuals with photosensitive epilepsy can have a seizure triggered by displays which flicker or flash, particularly if the flash has a high intensity and is within certain frequency ranges. This provision limits the frequency of flashing visual displays and indicators to avoid triggering a seizure in an individual with photosensitive epilepsy. This requirement is consistent with the Telecommunications Act Accessibility Guidelines and the recommendations of the advisory committee.

Paragraph (d) provides that where a timed response is required, at least one mode which does not require users to respond within a timed interval shall be provided; or at least one mode which allows users to adjust the response times to at least 5 times the default setting shall be provided. Requiring a user to respond within a certain length of time is a method commonly used by interactive menu driven systems. If a person is calling through a telephone relay service, or has a dexterity related disability, entering information such as a social security number within a specified time may be difficult or impossible. This provision is consistent with the recommendations of the advisory committee.

Question 4: The Board seeks information on whether a system is commercially available that would allow an individual user to adjust the response time interval, and if so, whether 5 times the default setting is the correct standard. If available, what is the cost of such a system? The Board is also interested in comments addressing any security concerns raised by this requirement. For example, would the security of an information kiosk which allowed individuals to access personal information be compromised by allowing for the adjustment of the time-out feature?

Paragraph (e) provides that where biometric forms of user identification or activation are used, an alternative form of identification or activation, which does not require the user to possess particular biological characteristics, shall also be provided. Identification by biometric forms such as retina scan, fingerprint or palm print are growing in popularity. They are used for building access as well as electronic system access. However, such identification measures create access problems for some persons with disabilities. For example, if a system relies on fingerprint identification for access, a person with prosthetic hands would not be able to use the system. As a result, the Board is proposing to require that an alternative form of identification be provided which does not rely on particular biological characteristics. Under section 504 of the Rehabilitation Act, an employee who is unable to access a system due to the constraints of a biological characteristic may be entitled to a reasonable accommodation which would enable him or her to access the system through an alternative measure. This provision would require that an alternative measure be in place when the system is procured. This requirement is consistent with the recommendations of the advisory committee.

Question 5: The Board may consider requiring multiple forms of biological identification as an alternative to requiring non-biological identification in the final rule. Would this be a better solution? What would be the cost impact of requiring multiple forms of biological identification? Does requiring an alternative mode of identification which is not based on biological characteristics lessen security? The proposed standards require that an alternative form of identification be built-in whenever biometric identification is used. The Board is seeking comment on whether the final rule should permit the alternative method of identification to be added on at a later date rather than built-in at the time of procurement. If so, should compatibility be limited to workstations or to all systems that use biometric identification?

Paragraph (f) requires touchscreen and touch-operated controls to be

operable without requiring body contact or close body proximity. This requirement addresses the difficulty that individuals who have artificial hands or use headsticks or mouthsticks to operate products have with capacitive or heat-operated controls which require contact with a person's body. Touch-operated is not the same as a control which is operated by pushing a button or sliding a switch. Touch-operated controls are activated by merely touching them or placing a body part, usually a finger, in very close proximity. They often depend on the body acting as an electrical conductor which changes the capacitance of the switch. In addition, some touch operated controls are designed to detect the heat from a finger. In both of these instances, the control cannot be activated by a prosthetic limb, a mouthstick, or even a gloved hand.

Alternative access modes which do not require body contact or close body proximity may include keypad input and voice input and different types of touchscreens or touch-operated controls which do not require bodily contact or proximity to operate. This provision is consistent with the recommendations of the advisory committee.

Section 1194.23 Component Specific Requirements

The requirements in the following paragraphs address specific components of products. Paragraph (a) applies to mechanically operated controls, keyboards or keypads. These provisions address controls which require a user to physically manipulate or press a switch, button, or knob, to operate a product.

Paragraph (a)(1) provides that controls and keys shall be tactilely discernible without activating the controls or keys. Tactilely discernible means that individual keys can be located and distinguished from adjacent keys. To comply with this requirement, controls that must be touched to activate, must be distinguishable from each other. This can be accomplished by using various shapes, spacing, or tactile markings. Because touch is necessary to discern tactile features, this provision provides that the control should not be activated by mere touching. For example, the standard desktop computer keyboard would meet this requirement because the tactile mark on the ''j'' and ''f'' keys permits a user to locate all other keys tactilely. The geographic spacing of the function, ''numpad'' and cursor keys make them easy to locate by touch. In addition, most keyboards require some pressure before they transmit a keystroke. Conversely, ''capacitance'' keyboards that react as soon as they are touched and have no raised marks or actual keys would not meet this requirement. A ''membrane'' keypad with keys that must be pressed can be made tactilely discernible by separating keys with raised ridges so that individual keys can be distinguished by touch. This provision is consistent with the recommendations of the advisory committee.

Paragraph (a)(2) provides that the status of toggle controls such as the ''caps lock'' or ''scroll lock'' keys be determined by both visual means and by touch or sound. For example, adding audio patterns such as ascending and descending pitch tones that indicate when a control is turned on or off would alleviate the problem of a person who is blind inadvertently pressing the locking or toggle controls. Also, buttons which remain depressed when activated or switches with distinct positions would meet this provision. This provision is consistent with the recommendations of the advisory committee.

Paragraph (a)(3) provides that controls shall be accessible to persons with limited dexterity. Individuals with tremor, cerebral palsy, paralysis, arthritis, or artificial hands may have difficulty operating systems which require fine motor control, assume a steady hand, or require two hands or fingers to be used simultaneously for operation. Individuals with high spinal cord injuries, arthritis, and other conditions may have difficulty operating controls which require significant strength. The provision limits the force required to five pounds and is based on section 4.27.4 of the ADA Accessibility Guidelines and is consistent with the Telecommunications Act Accessibility Guidelines and the recommendations of the advisory committee.

Paragraph (a)(4) provides that access to all program functions shall be available through keyboard or keypad commands. Keyboard or keypad commands provide a viable alternative for those who cannot use a pointing device or touchscreen. This provision does not require that every product have a keyboard. It requires that where a keyboard or keypad is provided, the program functions shall be available through keyboard or keypad commands. This provision is consistent with the recommendations of the advisory committee.

Paragraph (a)(5) establishes requirements for key repeat rate where an adjustable keyboard repeat rate is supported. It requires that the keyboard delay before repeat shall be adjustable to at least two seconds per character. This provision is consistent with the recommendations of the advisory committee.

The advisory committee also recommended three provisions that the Board has not included in this proposed rule. The committee recommended that assigned keyboard access (e.g., Ctrl+P for Print, Escape for cancel) be provided for commonly used functions or commands and that the keyboard map not change except under user control, so that a user memorizing key locations shall be able to rely on those locations. The Board has not included these provisions since they are user convenience issues not accessibility issues. The committee also recommended that all keyboard access functionality be documented with a product or follow documented operating system conventions. This provision is not included since documentation is already addressed by section 1194.31.

Paragraph (b) applies to non-embedded software applications and operating systems. All electronic and information technology products operate by following programming instructions referred to as software. Software can be divided into two broad categories: software that is embedded in a chip mounted in a product and software that is loaded onto a storage device such as a hard disk and can be erased, replaced or updated. The provisions in this section address requirements for accessible ''installable, non-embedded'' software.

Paragraph (b)(1) requires the use of keystrokes for navigation among interface elements. For persons with vision impairments who cannot use a pointing device such as a mouse, having access to program controls through keyboard navigation is essential. An example of this feature would be the ability to tab through the choices in a dialog box rather than requiring that a user move a pointer to a particular selection and click on it. This provision is consistent with the recommendations of the advisory committee.

Paragraph (b)(2) prohibits applications from disabling access features of applications or the operating system. There are commercially available software applications and operating systems that have accessibility features built-in that can be turned on or off by a user. These include features that can reverse the color scheme, show an image when an error tone is generated, or provide for ''sticky keys'' that allow a user to hit key combinations (such as control-C) sequentially rather than simultaneously. This provision prohibits other software programs from disabling these features when selected. This requirement is

consistent with the recommendations of the advisory committee.

Paragraph (b)(3) requires that a well-defined on-screen indication of the current focus be provided that moves among interactive interface elements as the input focus changes. The focus is the point on a screen where an action will occur when a keystroke or mouse click is activated. For example, when an individual displays a file directory on the screen, the focus point shows what file will be activated when the enter key is pressed. The focus must be programmatically exposed so that assistive technology can track the focus and focus changes and be easily seen by the user. The focus point must be identified in the program language. Making the identification of the focus point in the software programmatically available allows programmers of assistive technology software such as screen readers, to let the user know where the current focus is placed. This provision is consistent with the recommendations of the advisory committee.

Paragraph (b)(4) requires that programs provide sufficient information about a user interface element, including the identity, operation and state of the element, to assistive technology software. User interface elements can include, but are not limited to, buttons, checkboxes, menu bars, or tool bars. For assistive technology to operate efficiently, it must have access to the information about a user interface from the program to be able to inform the user of the existence, location, and status of all interface elements. This provision is consistent with the recommendations of the advisory committee.

Paragraph (b)(5) provides requirements for accessing images that represent an action. For example, a push button, checkbox or other action point is often represented by a graphic. Assistive technology however, cannot describe pictures or graphics. This provision requires that programs provide text such as a ''tooltip'' for the assistive technology to interpret the pictures so that a user of assistive technology can identify what action will occur when an element is activated by a keystroke or mouse click. This provision is consistent with the recommendations of the advisory committee.

Paragraph (b)(6) provides that the use of an image will be consistent throughout an application. Most screen reading programs allow users to assign text names to bitmap images. If the bitmap image should change meaning during the running of an application, the assigned identifier is no longer valid. This provision prohibits the changing of the meaning of a bitmap image during an application and is consistent with the recommendations of the advisory committee.

Paragraph (b)(7) provides that software must follow standard programming techniques applicable for the specific operating system when software programs supply text to assistive technology programs. If programs are written using nonstandard code, other programs such as software for assistive technology may not be able to receive information from the application. At a minimum, the types of text information that must be available include text content, text input caret location, and text attributes. This provision is consistent with the recommendations of the advisory committee.

Paragraph (b)(8) requires that a minimum of eight foreground and eight background color selections capable of producing a variety of contrast levels be provided. This provision requires more than just providing color choices. The available choices must also allow for different levels of contrast. Many people experience a high degree of sensitivity to bright displays. Someone with this condition cannot focus on a bright screen for long because they will soon be unable to distinguish individual letters. An overly bright background causes a visual ''white-out''. To alleviate this problem, the user must be able to select a softer background and appropriate foreground colors.

In addition to requiring different levels of colors and contrasts, the advisory committee recommended providing a ''wide variety'' of font size and style settings. The proposed provision does not require variations of font sizes and styles because those who would benefit from increased font size will also need an increase in the size of all screen elements. This can best be accomplished by adding screen enlargement software to the system.

Question 6: The Board seeks comment on whether eight foreground and eight background colors is sufficient to give the user ample selections. If a larger number of choices were required, is software commercially available from more than one manufacturer?

Paragraph (b)(9) prohibits applications from overriding user selected contrast and color selections. This provision addresses the problem of applications refusing to respect system-wide settings and is consistent with the recommendations of the advisory committee. Often persons with disabilities prefer to select color, contrast, keyboard repeat rate, and keyboard sensitivity settings in an operating system. When an application disables these settings, accessibility is reduced. This provision allows the user to select personalized settings which cannot be disabled by software programs.

Paragraph (b)(10) requires that people with disabilities have access to electronic forms. Electronic forms are a popular method used by many agencies to gather information or permit a person to apply for services, benefits, or employment. The 1998 Government Paperwork Elimination Act requires that Federal agencies make electronic versions of their forms available online and allows individuals and business to use electronic signatures to file these forms electronically. This provision requires that when an agency uses a form that cannot be read and manipulated by assistive technology, an alternative form must also be provided that is accessible. An example of a form which is not accessible is one which is graphical in nature and cannot be translated into meaningful text by assistive technology. This provision is consistent with the recommendations of the advisory committee.

Paragraph (b)(11) establishes requirements for handling animated text. The use of animation on a screen can pose serious access problems for users of screen readers or other assistive technology. When important elements such as push buttons or relevant text are animated, the user of assistive technology cannot access the application. This provision requires that in addition to the animation, an application provide the elements in a static form. This provision is consistent with the recommendations of the advisory committee.

The advisory committee also recommended that system startup and restart be accessible, however, the Board has not included that provision in the proposed rule since no measurable standards were recommended.

Paragraph (c) applies to web-based information and applications. These standards do not apply to external web sites, including search engines, which are not developed or procured by a Federal agency. For example, an employee of an agency may use a search engine which is based on a commercial web site. That search engine does not have to comply with these standards.

By statute, when a Federal agency develops, procures, maintains or uses electronic and information technology, including web-based information and applications, they must comply with these standards unless to do so would

be an undue burden (section 508(a)(1)(A)). The enforcement provisions of section 508, however, are limited to those web-based information and applications that are procured on or after August 7, 2000. (See section 508(f)(1)(B)). The enforcement provisions are silent with respect to products which are not procured, but are developed, used or maintained by a Federal agency (*e.g.,* an agency develops a web page in house). However, even though the enforcement mechanisms provided in section 508 do not authorize complaints or lawsuits for inaccessible products which are developed, used or maintained by an agency, the Board expects that these products, including web pages, will be accessible. (See section 508(a)(1)(A) which addresses the development, procurement, maintenance, or use of electronic and information technology by the Federal government.) The Board notes that section 504 of the Rehabilitation Act imposes a duty on the Federal government to make programs conducted by the Federal government (*e.g.,* an agency web site) accessible and that both sections 501 and 504 of that Act requires that Federal agencies address the needs of employees with disabilities. (29 U.S.C. 794 (section 504); 29 U.S.C. 791 (section 501)). It is possible that in determining compliance with these statutory obligations, the standards issued by the Board under section 508 of the Rehabilitation Act will be used as a yardstick to measure whether a program is accessible. Furthermore, under section 508 of the Rehabilitation Act, the Department of Justice has an obligation to prepare biennial reports assessing compliance by Federal agencies with these standards (section 508(d)(2)). That report would address products developed, procured, maintained or used by the Federal government, as well as actions regarding individual complaints.

Example 1: On January 1, 2001, a Federal agency enters into a procurement contract with an outside entity for the development of an agency web site. That web site would have to meet these standards, unless to do so would be an undue burden. Because it is a procurement on or after August 7, 2000, the agency would be subject to a complaint or civil action if the web site was not accessible. Suppose however, the agency develops its own web site. That web site would have to be accessible under section 508(a)(1)(A), unless it was an undue burden, but because it was not a procurement, the enforcement provisions under section 508(f) of the Rehabilitation Act would not apply. While there may not be a remedy under section 508, there would be recourse under section 504 of the Rehabilitation Act in that the agency was conducting a program that was not accessible.

Example 2: An agency has an existing web site and enters into a procurement contract with an outside entity to develop new pages to be added to its web site to address a new program. The content of the new pages would have to meet these standards unless to do so would be an undue burden. If the procurement was on or after August 7, 2000, the accessibility of the new pages could be the subject of a complaint or civil action. With respect to the preexisting web site, it would be subject to the agency's obligations under section 504 of the Rehabilitation Act which may require that the agency develop a plan to update the web site and make it accessible over a period of time.

The advisory committee recommended that the Board's standards reference the World Wide Web Consortium's (W3C) Web Accessibility Initiative's (WAI) [13] Web Content Accessibility Guidelines, User Agent Accessibility Guidelines, and Authoring Tool Accessibility Guidelines, including requirements from priority levels one and two for each document.

Rather than referencing the WAI guidelines, the proposed standards include provisions which are based generally on priority level one checkpoints of the Web Content Accessibility Guidelines 1.0, as well as other agency documents on web accessibility and additional recommendations of the advisory committee. The Board's rephrasing of language from the Web Content Accessibility Guidelines 1.0 in paragraph (c) of the proposed rule has not been reviewed by the W3C, since proposed rules are not made public until published in the **Federal Register**.

The advisory committee also included specific recommendations for browsers and web authoring tools. Because web browsers and web authoring tools, (as well as web pages) are software in nature, they must also comply with the requirements of section 1194.23(b).

Paragraph (c)(1) requires that a text equivalent be provided for every non-text element. For example, a link or graphic on a web page that indicates an action or a URL cannot be interpreted by assistive technology. This provision would require that an alternative text label be assigned to that link or graphic. This provision is consistent with the recommendations of the advisory committee.

Paragraph (c)(2) requires alternatives for color based prompting. The creative use of color can enhance the look of web pages. However, a person who has either low vision or is color blind would have difficulty activating color based prompts. Web pages therefore, are required to indicate with text that which is evident by using color. For example, a statement such as ''press the green button to begin,'' should read ''press the green button labeled start to begin,'' and the word ''start'' should be associated with the green button. This provision is consistent with the recommendations of the advisory committee.

Paragraph (c)(3) provides that the user be alerted to a change in the natural language of a web page. For example, this requirement can be met by adding a line of text to a web page which changes from English to French by adding text which reads ''the following paragraph is presented in French.'' Most screen readers used by blind and visually impaired persons only have rules for pronouncing one language. If the web site did not alert the user to a language change, the user would be at a loss as to why the page had become unintelligible. This provision is consistent with the recommendations of the advisory committee.

Paragraph (c)(4) provides that documents must be organized so they are readable without requiring style sheets. Style sheets are a relatively new technology that allows web site designers to easily control formatting (such as font size and color and text alignment) throughout their web pages. This provision does not prohibit the use of style sheets (which can often be used to enhance accessibility) provided that web pages using style sheets can be viewed by browsers not supporting style sheets and by browsers that have disabled support for style sheets. In addition, certain newer browsers allow users to define their own style sheets to improve the accessibility of web pages. This provision prohibits the use of style sheets that interfere with user defined style sheets. This provision is consistent with the recommendations of the advisory committee.

Paragraph (c)(5) requires that when alternative access to web page content, such as captioning of audio programs or multimedia, is provided, that alternative

[13] The Web Accessibility Initiative (WAI), in coordination with organizations around the world, is pursuing accessibility of the web through five primary areas of work: technology, guidelines, tools, education and outreach, and research and development. Additional resources are available at http://www.w3.org/WAI, including the Web Content Accessibility Guidelines 1.0, available at http://www.w3.org/TR/WCAG10.

must be updated on the screen every time the content changes. This provision is consistent with the recommendations of the advisory committee.

Paragraph (c)(6) provides that redundant text links must be provided for each active region of a server-side image map. When a web page uses server-side maps as navigation aids, the individual browser cannot communicate the URL that will be followed when a region of the map is activated. Therefore, the redundant text link will be necessary to provide access to the page for anyone not able to see or load the map. This provision is consistent with the recommendations of the advisory committee.

Paragraph (c)(7) provides that client-side image maps must be used whenever possible in place of server-side image maps. When a web page downloads a client-side image map to a browser, it also sends all the information about what action will happen when a region of the map is pressed. For this reason, client-side image maps, even though graphical in nature, will show the links related to the map in a text format. This provision is consistent with the recommendations of the advisory committee.

Paragraphs (c)(8) and (9) permit the use of tables, but require that the tables be coded according to proper HTML rules. Many assistive technology applications can interpret the HTML coding of tables. When tables are coded inaccurately or table codes are used for non tabular material, the assistive technology cannot accurately read the content.

Paragraph (c)(10) establishes requirements for the use of frames. Frames can be an asset to users of screen readers if the labels on the frames are explicit. Such labels as top, bottom, or left, provide few clues as to what is contained in the frame. Labels such as ''navigation bar'' or ''main content'' are more meaningful and facilitate frame identification and navigation. This provision is consistent with the recommendations of the advisory committee.

Paragraph (c)(11) provides that scripts, applets, or other plug-ins must not be essential to reading or navigating a web page. When the content or navigation of a web page relies on scripts or requires that a user have a specific plug-in installed, the result can be an inaccessible page. If the page cannot be created with text attributes for navigation and content that do not require a plug-in, then an alternate text page may be the only solution. The Board recommends that access features be incorporated into all web pages without resorting to alternative text pages. This provision is consistent with the recommendations of the advisory committee.

Paragraph (c)(12) provides that when features such as captioning for audio output or descriptive audio for graphics is provided, the captioning or description must be presented in a synchronous manner. This provision is consistent with the recommendations of the advisory committee.

Paragraph (c)(13) provides that an appropriate method must be used to facilitate the easy tracking of page content that provides users of assistive technology the option to skip repetitive navigation links. It is common for web authors to place navigation links at the top, bottom, or side of every new page. This technique can render use of a web site very difficult for persons using a screen reader as screen readers move through pages reading from top to bottom. The use of repetitive navigation links forces persons with visual impairments to re-read these links when moving to every new page. This provision allows the user to more efficiently read the contents of a page. This provision is consistent with the recommendations of the advisory committee.

The advisory committee also recommended that if extensive ASCII art is used, a link should be provided to allow a user to jump to the end of the ASCII art. The Board has not included this provision since it is a user convenience issue not an accessibility issue.

Paragraph (d) applies to telecommunications functions. These provisions address products which involve the transmission of information without changing the form or content of the information as sent and received. ''Telecommunications'' is further defined in section 1194.4, Definitions.

Paragraph (d)(1) requires that products shall provide a standard non-acoustic connection point for TTYs when they have a function that allows voice communication and do not provide a TTY functionality. It shall also be possible for the user to easily turn any microphone on the product on and off to enable the user who can talk to intermix speech with TTY use. Individuals who use TTYs to communicate must have a non-acoustic way to connect TTYs to telephones in order to obtain clear TTY connections, such as through a direct RJ–11 connector, a 2.5 mm audio jack, or automatic switching. When a TTY is connected directly into the network, it must be possible to turn off the acoustic pickup (microphone) to avoid having background noise in a noisy environment mixed with the TTY signal. Since some TTY users make use of speech for outgoing communications, the microphone on/off switch must be easy to flip back and forth or a push-to-talk mode should be available. This provision is consistent with the Board's Telecommunications Act Accessibility Guidelines and the recommendations of the advisory committee.

Paragraph (d)(2) requires products providing voice communication functionality to be able to support use of all cross-manufacturer non-proprietary standard signals used by TTYs. Some products compress the audio signal in such a manner that standard signals used by TTYs are distorted or attenuated, preventing successful TTY communication. Use of such technology is not prohibited as long as the compression can be turned off to allow undistorted TTY communication. This provision is consistent with the Telecommunications Act Accessibility Guidelines and the recommendations of the advisory committee.

Paragraph (d)(3) provides that voice mail, auto-attendant, and interactive voice response telecommunications systems shall be usable by TTY users with their TTYs. Voice mail systems are available which allow TTY users to retrieve and leave TTY messages. This provision does not require that phone systems have voice to text conversion capabilities so that a person who is deaf can retrieve a voice mail message directly with their TTY without relying on a relay service or an interpreter, but it does require that TTY users can retrieve and leave TTY messages. This provision is consistent with the recommendations of the advisory committee.

Paragraph (d)(4) prohibits telecommunications services, such as interactive systems, from imposing time limits for responses. For example, a person accessing a Federal agency's automated menu from a TTY may need additional time to read the options and respond. This provision is consistent with the Telecommunications Act Accessibility Guidelines and the recommendations of the advisory committee.

Paragraph (d)(5) provides that functions such as caller identification must be accessible for users of TTYs, telecommunications relay services, and for users who cannot see displays. This provision is consistent with the recommendations of the advisory committee.

Paragraph (d)(6) requires products to be equipped with volume control that provides an adjustable amplification up to a minimum of 20 dB of gain. If a volume adjustment is provided that allows a user to set the level anywhere from 0 to the upper requirement of 20 dB, there is no need to specify a lower limit. If a stepped volume control is provided, one of the intermediate levels must provide 12 dB of gain. The gain applies to the voice output not Baudot, ASCII, or other machine codes. The proposed level of amplification is different from that required under the Hearing Aid Compatibility Act and the Federal Communications Commission's (FCC) regulations (47 CFR 68.317 (a)). The FCC requires volume control that provides, through the receiver in the handset or headset of the telephone, 12 dB of gain minimum and up to 18 dB of gain maximum, when measured in terms of Receive Objective Loudness Rating.

In accordance with the National Technology Transfer and Advancement Act, this provision is consistent with the 1998 ANSI A117.1 document, ''Accessible and Usable Buildings and Facilities.'' ANSI is the voluntary standard-setting body which issues accessibility standards used by the nation's model building codes. The Board has issued a separate NPRM to harmonize the existing ADAAG provision with the ANSI standard. This provision is consistent with the Telecommunications Act Accessibility Guidelines. Tests conducted by two independent laboratories found high gain phones without special circuitry currently on the market which had 90 dB and 105 dB at maximum volume setting. This is a 20 dB gain over the standard 85 dB ambient noise level. (See Harry Teder Ph.D., Consulting in Hearing Technology; Harry Levitt, Ph.D., Director, Rehabilitation Engineering and Research Center on Hearing Enhancement and Assistive Devices, Lexington Center).

Paragraph (d)(7) requires that an automatic reset be installed on any telephone that allows the user to adjust the volume higher then the normal level. This is a safety feature to protect people from suffering damage to their hearing if they accidentally answer a telephone with the volume turned too high. This provision is consistent with the recommendations of the advisory committee.

Paragraph (d)(8) requires products that provide auditory output by an audio transducer normally held up to the ear, to provide a means for effective wireless coupling to hearing aids. Generally, this means the earpiece generates sufficient magnetic field strength to induce an appropriate field in a hearing aid T-coil. The output in this case is the direct voice output of the transmission source, not the ''machine language'' such as tonal codes transmitted by TTYs. For example, a telephone must generate a magnetic output so that the hearing aid equipped with a T-coil can accurately receive the message. This provision is consistent with the Telecommunications Act Accessibility Guidelines and the recommendations of the advisory committee.

Paragraph (d)(9) requires that interference to hearing technologies shall be reduced to the lowest possible level that allows a user of hearing technologies to utilize a telecommunications product. Individuals who are hard of hearing use hearing aids and other assistive listening devices, but they cannot be used if products introduce noise into the listening aids because of electromagnetic interference. The American National Standards Institutes (ANSI) has established a task group under its subcommittee on medical devices to work toward the development of methods of measurement and defining the limits for hearing aid compatibility and accessibility to wireless telecommunications. The ANSI C63.19 task group is continuing to develop its standard, C63.19–199X, American National Standard for Methods of Measurement for Hearing Aid Compatibility with Wireless Communications Devices. When the standard is completed, the Board may reference it. This provision is consistent with the Telecommunications Act Accessibility Guidelines and the recommendations of the advisory committee.

Question 7: The Board seeks comment on how to better quantify the ''lowest possible level'' of interference.

Paragraph (e) applies to video or multimedia products. Multimedia products involve more than one media and include, but are not limited to, video programs, narrated slide production, and computer generated presentations.

Paragraph (e)(1) requires any system with a screen larger than 13 inches to be equipped with caption decoder circuitry which appropriately receives, decodes, and displays closed captions from broadcast, cable, videotape, and DVD signals. The FCC has standards for televisions 13 inches or larger, but video capabilities are now becoming popular in computers as well. This provision addresses these new video technologies. This provision is consistent with the recommendations of the advisory committee.

Paragraph (e)(2) requires that television tuners, including tuner cards for use in computers, be equipped with the circuitry needed to carry the secondary audio channel. The secondary audio channel is commonly used for audio description. This provision is consistent with the recommendations of the advisory committee.

Paragraphs (e)(3) and (4) require that when an agency develops or procures multimedia productions that are intended to be shown repeatedly to audiences that may include persons who would need the captioning or audio description features, those productions must contain captioning or audio description. Audio description involves the insertion into a multimedia program, such as a video tape, of narrated descriptions of settings and actions that are not otherwise reflected in the dialogue, such as the movement of a person in the scene. Audio description is typically provided through the use of the Secondary Audio Programming (SAP) channel so that it is audible only when that channel is activated through a TV set, computers with a tuner card, or a VCR with SAP capability.

Under these provisions, the requirements to have a videotape or multimedia production captioned or audio described would depend on its intended use. For example, an agency produces, or contracts to have produced, a videotape on government ethics. This videotape is made available for many agencies to purchase and use in training sessions. Since the tape is intended to be shown multiple times and to varied audiences, the composition of which may include people with hearing or vision impairments, it must be captioned and audio described, unless it is an undue burden to do so. On the other hand, a small agency or single office purchases a videotape on some aspect of acoustics which it intends to show to its staff to help understand a technical issue. Since the videotape is not intended to be shown on a repeated basis, and the agency knows that none of its staff have a hearing or vision impairment, the videotape would not need to be captioned or audio described. If however, the video was to be shown to an employee who is deaf, the agency would be required to accommodate that individual by providing an interpreter even though the videotape would not be required to be captioned. Such accommodations would be required

under section 501 or 504 of the Rehabilitation Act, not section 508.

Question 8: The Board seeks information on the technical feasibility of making various computer generated presentations that comply with these provisions. Based on the proposed rule, computer based narrated slide presentations must be both captioned and audio described if they are shown multiple times and to varied audiences, the composition of which may include people with hearing or vision impairments.

Paragraph (e)(5) provides that viewers must be able to turn captioning or video description features on or off. A person who can hear the audio may find the captioning of conversation intrusive, and people who can see the screen and can hear may find the audio description distracting. For this reason, it is important that an individual have the ability to select or deselect a particular feature.

The advisory committee also recommended that digital television receivers meet the EIA–708–A standard for the transmission of captioning on a digital television signal. The Board has not included this provision since in July 1999, the Federal Communications Commission proposed to amend its rules to include requirements for the display of closed captioned text on digital television receivers. The FCC took this action to ensure that closed captioning services are available in the transition from analog to digital broadcasting. The Board may address this issue in future changes to the standards.

Paragraph (f) applies to information kiosks and information transaction machines. This category of products includes, but is not limited to, automatic teller machines and information kiosks. On November 16, 1999, the Board published a Notice of Proposed Rulemaking to revise and update its accessibility guidelines for buildings and facilities covered by the Americans with Disabilities Act of 1990 (ADA) and the Architectural Barriers Act of 1968 (ABA). 64 FR 62248 (November 16, 1999). Included in that proposed rule are extensive revisions to the requirements for access to automatic teller machines (ATMs) and fare machines. (See sections 707.1;–707.8.3). The proposed revisions to the ADA and ABA guidelines provide more specific guidance on access to such equipment for people with vision impairments. In that proposed rule, the Board requested comment on whether the final rule should cover all types of interactive transaction machines, such as point-of-sale machines and information kiosks, among others, rather than be limited to automatic teller machines and fare vending machines. If the Board decides to broaden the requirements to other types of information transaction machines in the final rule for the ADA and ABA guidelines, the final rule for access to electronic and information technology may not include requirements for information transaction machines since the ADA and ABA rulemaking would apply to the Federal government as well as the private sector.

Paragraph (f)(1) provides that access features must be built into the system rather than requiring users to attach an assistive device to the product. Personal headsets are not considered an assistive device and may be required to use the product. This provision is consistent with the recommendations of the advisory committee.

Paragraph (f)(2) provides that information kiosks and information transaction machines that deliver audio output, including speech, shall provide a mechanism for private listening and user interruptability. A mechanism for private listening means providing either a telephone type handset or a standard jack for headphones. These mechanisms allow users to hear information in private. Allowing the user to interrupt long spoken phrases increases the product's usability and saves time for the user and others who may be waiting to access the product. This provision is consistent with the recommendations of the advisory committee.

Paragraph (f)(3) provides that information kiosks and information transaction machines that deliver voice output, shall provide incremental volume control with output amplification up to a level of at least 65 dB. Where the ambient noise level of the environment is above 45 dB, a volume gain of at least 20 dB above the ambient level shall be user selectable. According to the Occupational Safety and Health Administration, and the American Speech, Language, and Hearing Association, 65 dB is the volume level for normal speech. This provision requires that audio output from a kiosk type product shall have a minimum level of 65 dB. For people with reduced hearing, voice levels must be 20 dB above the surround sound level to be understandable. This means that as long as the noise level in the surrounding environment is below 45 dB, the 65 dB output level would be sufficient. If the product is in an environment with a high noise level, the user must be able to raise the volume to a setting of 20 dB higher than the ambient level. This provision is consistent with the recommendations of the advisory committee.

The advisory committee also recommended standards for remote wireless access to these products. The Board has not included those recommendations since compliant technology is still in development.

Other Issues

The advisory committee recommended other provisions that the Board did not include in this rule. For example, the committee considered methods for making a personal digital assistant (PDA), such as a ''palmtop,'' accessible for a segment of people with disabilities. The Board has not included such a provision because the technology to make PDAs accessible does not exist at this time.

The committee also recommended that the connection of cables, mounting, and attaching external elements of products (*e.g.*, connecting an external monitor or accessory), require less than 5 pounds of force and that cables be differentiable by touch or keyed for corresponding connections. These provisions are not included since members of the public seeking information from an agency would not be expected to attach or disconnect cables and employees are also covered by sections 501 and 504 of the Rehabilitation Act which require reasonable accommodation to the needs of an employee. Also, connecting and disconnecting cables is not generally an employee task. In the few instances where it is, such as attaching a refreshable Braille display to a laptop, the connections are usually made with standard parallel and serial connectors which are polarized or shaped to prevent incorrect connections. Section 1194.25(b) restricts the use of proprietary connectors.

Section 1194.25 Requirements for Compatibility With Assistive Technology

Compliant products must be accessible either inherently or by being compatible with add-on assistive technology. The provisions in this section address the requirements for compatibility.

Paragraph (a) provides that all products that act as a transport or conduit for information or communication shall pass all codes, translation protocols, formats, or any other information necessary to provide information or communication in an accessible format. In particular, signal compression technologies shall not remove information needed for access or shall restore it upon decompression.

Some transmissions include codes or tags embedded in ''unused'' portions of the signal to provide accessibility. For example, closed captioning information is usually included in portions of a video signal not seen by users without decoders. This section prohibits products from stripping out such information or requires the information to be restored at the end point. This provision is consistent with the Telecommunications Act Accessibility Guidelines and the recommendations of the advisory committee.

Paragraph (b) requires that, where provided, one of each type of expansion slot, port and connector must comply with publicly available industry standards. This provision applies to hardware products that may require the attachment of assistive technology devices to make them accessible. Examples of publicly available industry standards may include RS–232, Centronics, SCSI interfaces, PCMCIA, or USB.

Paragraph (c) prohibits operating system software from interfering with assistive technology. If an operating system preempts the use of keyboard assignments or the use of specific ports, it can be difficult or impossible to operate the system with assistive technology. This provision requires operating systems to permit the background operation of assistive technology products. This provision is consistent with the recommendations of the advisory committee.

Paragraph (d) requires products with auditory output to provide the auditory signal through an industry standard connector at a standard signal level. Individuals using personal headphones, amplifiers, audio couplers, and other audio processing devices need a place to tap into the audio generated by the product in a standard fashion. This provision is consistent with the Telecommunications Act Accessibility Guidelines and the recommendations of the advisory committee.

Section 1194.27 Functional Performance Criteria

This section requires that a product's operation and information retrieval functions be operable through at least one mode which meets each of the following paragraphs.

Paragraph (a) provides that at least one mode of operation and information retrieval that does not require user vision shall be provided, or support for assistive technology used by people who are blind or visually impaired shall be provided. It is not expected that every software program will be self-voicing or have its own built-in screen reader. Providing keyboard access as specified in 1194.23(a) and software that complies with section 1194.23(b) would satisfy this requirement. This provision is consistent with the Telecommunications Act Accessibility Guidelines and the recommendations of the advisory committee.

Paragraph (b) provides that at least one mode of operation and information retrieval that does not require visual acuity greater than 20/70 (when corrected with glasses) must be provided in audio and enlarged print output that works together or independently. In the alternative, support for assistive technology used by people who are visually impaired must be provided. Although visual acuity of 20/200 is considered ''legally blind,'' there are actually millions of Americans with vision below the 20/200 threshold who can still see enough to operate and get output from technology, often with just a little additional boost in contrast or font size. This paragraph requires either the provision of screen enlargement and voice output or, that the product support assistive technology. This provision is consistent with the Telecommunications Act Accessibility Guidelines and the recommendations of the advisory committee.

Paragraph (c) provides that at least one mode of operation and information retrieval that does not require user hearing must be provided or, in the alternative, support for assistive technology used by people who are deaf or hard of hearing shall be provided. This requirement is met when a product provides visual redundancy for any audible cues or audio output. If this redundancy cannot be built into a product then the product shall support the use of assistive technology that complies with section 1194.25, Requirements for Compatibility with Assistive Technology. This provision is consistent with the Telecommunications Act Accessibility Guidelines and the recommendations of the advisory committee.

Paragraph (d) requires that audio information important for the use of a product, must be provided in an enhanced auditory fashion by allowing for an increase in volume and/or altering the tonal quality or increasing the signal to noise ratio. For example, increasing the output would assist persons with limited hearing to receive information. Audio information that is important for the use of a product includes, but is not limited to, error tones, confirmation beeps and tones, and verbal instructions. This provision is consistent with the Telecommunications Act Accessibility Guidelines and the recommendations of the advisory committee.

Paragraph (e) provides that at least one mode of operation and information retrieval which does not require user speech must be provided, or support for assistive technology shall be provided. Most products do not require speech input, however, if speech input is required to operate a product, this paragraph requires that at least one alternative input mode also be provided. For example, an interactive telephone menu that requires the user to say or press ''one'' would meet this requirement. This provision is consistent with the Telecommunications Act Accessibility Guidelines and the recommendations of the advisory committee.

Paragraph (f) provides that at least one mode of operation and information retrieval that does not require fine motor control or simultaneous actions and which is operable with limited reach and strength must be provided. Products that meet the requirements in sections 1194.21(b) and 1194.23(a)(3) would comply with this requirement. This provision is consistent with the Telecommunications Act Accessibility Guidelines and the recommendations of the advisory committee.

The advisory committee also recommended provisions that address limited cognitive or memory abilities and limited language and learning disabilities. Although it is important to be cognizant of issues for all people with disabilities, we believe that it is difficult for a manufacturer or procurement official to know if the criteria the committee recommended were met. Also, many of the features required to accommodate other disabilities, can be very useful to people with learning and language related disabilities. For example, features such as voice output and highlighting a focus tracking helps those with reading difficulties.

Subpart C—Information, Documentation, and Support

Section 1194.31 Information, Documentation, and Support

In order for a product or system to be fully accessible, the information about the product and product support services must also be accessible. These issues are addressed in this section.

Paragraph (a) provides that when an agency provides end-user documentation to users of technology, the agency must ensure that the documentation is available upon request in alternate formats. Alternate formats

are defined in section 1194.4, Definitions. Except as provided in paragraph (b) below, this provision does not require alternate formats of documentation that is not provided by the agency to other users of technology. This provision is consistent with the recommendations of the advisory committee.

Paragraph (b) requires that agencies supply end-users with information about accessibility or compatibility features that are built into a product, upon request. This provision is consistent with the Telecommunications Act Accessibility Guidelines and the recommendations of the advisory committee.

Paragraph (c) provides that help desks and other support services serving an agency must be capable of accommodating the communications needs of persons with disabilities. For example, an agency help desk may need to communicate through a TTY. The help desk or support service must also be familiar with such features as keyboard access and other options important to people with disabilities. This provision is consistent with the Telecommunications Act Accessibility Guidelines and the recommendations of the advisory committee.

The advisory committee also recommended that any training provided by manufacturers, providers or other parties, accommodate the functional capabilities of all participants. The Board has not included this provision since Federal employees already have a right to accessible training under section 504 and other provisions of the Rehabilitation Act.

Regulatory Process Matters

Executive Order 12866: Regulatory Planning and Review and Congressional Review Act

This proposed rule is an economically significant regulatory action under Executive Order 12866 and has been reviewed by the Office of Management and Budget (OMB). The proposed rule is also a major rule under the Congressional Review Act. The Board has prepared a regulatory assessment for the proposed rule which has been placed in the docket and is available for public inspection. The regulatory assessment is also available on the Board's Internet site (http://www.access-board.gov/rules/508nprm.htm).

Section 508 covers the development, procurement, maintenance or use of electronic and information technology by Federal agencies. Exemptions are provided by statute for national security systems and for instances where compliance would impose an undue burden on an agency. The proposed rule improves the accessibility of electronic and information technology used by the Federal government and will affect Federal employees with disabilities, as well as members of the public with disabilities who seek to use Federal electronic and information technologies to access information. The proposed rule is based largely on the recommendations of the Electronic and Information Technology Access Advisory Committee.

The standards in the proposed rule will be incorporated into the Federal Acquisition Regulation (FAR). Failure of a Federal agency to comply with the standards may result in a complaint under the agency's existing complaint procedures under section 504 of the Rehabilitation Act or a civil action seeking to enforce compliance with the standards.

Estimated Baseline of Federal Spending for Electronic and Information Technology

According to OMB projections, Federal government expenditures for information technology products will be $38 billion in fiscal year 2000. The defense agencies appear to have the highest information technology budgets, while civilian agency budgets are expected to increase rapidly. It was not possible however, to disaggregate this data such that it was useful for purposes of a regulatory assessment. Instead, the regulatory assessment uses annual sales data collected from the General Services Administration (GSA) as a proxy for the actual number of products in each applicable technology category. Using the GSA data, the regulatory assessment estimates that the Federal government spends approximately $12.4 billion annually on electronic and information technology products covered by the proposed rule. This estimate likely understates the actual spending by the Federal government because it is limited to the GSA data. Agencies are not required to make purchases through the GSA supply service, thus many items are purchased directly from suppliers. As a result, the government costs for software and compatible hardware products may actually be higher than estimates would indicate.

The regulatory assessment also examines historical budgetary obligations for information technology tracked by OMB until 1998. Two scenarios were examined to develop an upper and lower bound to represent the proportion expected to be potentially affected by the proposed rule. During a five year period from fiscal year 1994 through fiscal year 1998, the average proportion of the total information technology obligations potentially covered by the proposed rule ranged between 25 percent and 50 percent. The $12.4 billion GSA estimate falls within this range, representing 33 percent of the total fiscal year 1999 information technology obligations of $38 billion. One limitation of these ranges is that they are based on gross classifications of information technology obligations and do not provide the level of disaggregation necessary to parallel the GSA data assessment. As a result, the two scenarios likely include expenditures on products and services that would not be effected by the proposed rule to a higher degree than the data obtained from GSA.

The degree to which the potential understatement of baseline spending leads to an understatement of the cost of the proposed rule is unclear. Some of the components of the estimated cost of the proposed rule rely heavily on the level of Federal spending while others are independent of this number.

Question 9: The Board seeks information, other than that collected from GSA, which would provide additional product specific data to further assess the cost impact of this rule. The data should cover either the entire, or at least a representative majority, of Federal government acquisitions of electronic and information technology; or capture non-GSA procurements.

Estimated Cost of Proposed Rule

The regulatory assessment includes both direct and opportunity costs associated with the proposed rule. Major sources of cost include:

- Costs of modifying electronic and information technology to meet the substantive requirements of the standards;
- Training of staff, both Federal and manufacturers, to market, support, and use technologies modified in response to the standards; and
- Translation of documentation and instructions into alternate formats.

The direct costs that were quantified are shown in Table 1. The total quantified costs to society range from $177 million to $1,068 million annually. The Federal proportion of these costs is estimated to range between $85 million and $691 million. The ability of manufacturers, especially software manufacturers, to distribute these costs over the general consumer population will determine the actual proportion shared by the Federal government.

Assuming that the addition of accessibility features add value to the products outside the Federal government, it is expected that the costs will be distributed across society thereby setting a lower bound cost to the Federal government of $85 million. If manufacturers do not distribute the costs across society, the upper bound of the Federal cost will increase to an estimated $1,068 million. These costs must be placed in appropriate context by comparing them with the total Federal expenditures for information technology. By comparison, the lower and upper bound of the incremental costs represent a range of 0.23 percent to 2.8 percent of the $38 billion spent by the Federal government on information technology in fiscal year 1999. Although the regulatory assessment does not analyze the timing of expenditures or reductions in costs over time, it is expected that the costs will decrease over time as a proportion of total electronic and information technology spending.

TABLE 1

Electronic and information technology	Lower bound cost estimates (millions)	Upper bound cost estimates (millions)
General Office Software	$110	$456
Mission Specific Software	10	52
Compatible Hardware Products	.....	337
Document Management Products	56	222
Microphotographic Products	0.1	0.4
Other Miscellaneous Products	0.2	1
Total Social Cost	177	1,068
Estimated Federal Proportion	85	[1]691

[1] As noted above, if manufacturers do not distribute the costs across society, the upper bound of the Federal cost will increase to an estimated $1,068 million.

Accessible alternatives are available to satisfy the requirements of the proposed rule for many types of electronic and information technologies, particularly computers and software products. Some electronic and information technology products will require modifications to meet the requirements of the proposed standards.

For many types of electronic and information technology, the proposed rule focuses on compatibility with existing and future assistive devices, such as screen readers. The proposed rule does not require that assistive technologies be provided universally. Provision of assistive technologies is still governed by the reasonable accommodation requirements contained in sections 501 and 504 of the Rehabilitation Act. Section 508 does not require that assistive devices be purchased, but it does require that covered electronic and information technology be capable of having such devices added at some later time as necessary.

Software products represent the largest part of the estimated costs. The regulatory assessment assumes that Federal software expenditures can be divided into two major subcategories: general office applications and mission-specific applications. Internet applications are assumed to be represented within each of these subcategories. General office applications include operating systems, wordprocessors, and spreadsheets, and are assumed to represent 80 percent of the total software category. The remaining 20 percent covers mission-specific or proprietary applications that have limited distribution outside the Federal government. Within each subcategory, the estimated costs of the proposed rule are distributed according to the level or degree of accessibility already being achieved in the private sector.

The general office application subcategory is broken into three groups based on discussions with several industry experts. The first 30 percent is expected to require very little modification to satisfy the proposed standards and therefore no incremental cost is associated with this group. The middle 40 percent is expected to require minor to medium alterations to satisfy the proposed rule. The cost of modifying a particular general office application in this category is estimated to be in the range of 0.4 percent to 1 percent based on discussions with several manufacturers. This assumption is based on the ratio of employees dedicated to accessibility issues. The methodology uses employee classification as a proxy for cost or expense of accessibility research and development, labor, and design that are all factored into the final product cost. The remaining 30 percent is expected to require significant modifications to meet the requirements of the proposed rule, which is estimated to cost in the range of 1 percent to 5 percent based on discussion with industry experts.

The regulatory assessment assumes that the remaining 20 percent of the software products purchased by the Federal government represent proprietary or mission-specific software with limited distribution outside the government. These products will require significant modification to satisfy the proposed rule. Based on discussions with industry experts, the cost increase associated with achieving the level of accessibility required by the proposed rule is estimated to range from 1 percent to 5 percent.

Question 10: The Board requests comments on the assumptions applied to determine the cost associated with software products. The Board also seeks comment on alternative methods or data sources for evaluating the Federal government's expenditure on software products.

Estimated Benefits of Proposed Rule

The benefits associated with the proposed rule results from increased access to electronic and information technology for Federal employees with disabilities and members of the public seeking Federal information provided using electronic and information technology. This increased access reduces barriers to employment in the Federal government for persons with disabilities, reduces the probability that Federal employees with disabilities will be underemployed, and increases the productivity of Federal work teams. The proposed standards may also have benefits for people outside the Federal workforce, both with and without disabilities, as a result of spillover of technology from the Federal government to the rest of society.

Two methods are presented in the regulatory assessment for evaluating the quantifiable benefits of the proposed rule. The first is a wage gap analysis that attempts to measure the difference in wages between the general Federal workforce and Federal workers with disabilities (*i.e.,* targeted and reportable). While this analysis is limited to white collar Federal workers due to data constraints, the potential change in productivity is measured by the difference between the weighted average salary for all white collar Federal employees and the average within the two disability classes. This assumes that an increase in accessibility will help diminish this wage gap by increasing worker productivity.

The alternative is a team based approach for measuring the productivity of Federal workers. This approach is

based on the assumption that a Federal workers wage rate reflects their productivity and the scarcity of their skills in the labor market. However this may not apply to Federal wage rates, thus the average productivity of a Federal team is assumed to be equivalent to the average Federal wage rate. Based on this average rate, it is assumed that the proposed rule will produce an increase in productivity ranging between 5 percent and 10 percent.

Since no data have been identified to support the increase in productivity in the team based approach, the wage gap analysis is used to represent the benefits generated by the proposed rule shown in Table 2. Keeping in mind certain data limitations with this analysis, the benefits derived from the wage gap method do not account for benefits that may be accrued by the general public or other Federal workers due to spillover effects of increased accessibility resulting from the proposed standards.

TABLE 2

Productivity increase	Aggregate benefits range (millions)
Lower Bound	.....
Upper Bound	$466

Not all government policies are based on maximizing economic efficiency. Some policies are based on furthering the rights of certain classes of individuals to achieve more equitable results, regardless of the effect on economic efficiency. Accessibility to electronic information and technology is an essential component of civil rights for persons with disabilities. The proposed rule will ensure that Federal employees with disabilities will have access to electronic and information technology used by the Federal government that is comparable to that of Federal employees without disabilities; and that members of the public with disabilities will have comparable access to information and services provided to members of the public without disabilities through the use of Federal electronic and information technology.

Based on Bureau of Census statistics from 1994,[14] 20.6 percent or 54 million persons in the United States have some level of disability. By increasing the accessibility of electronic and information technology used by the Federal government, the proposed rule may also improve future employment opportunities in the Federal government for persons with disabilities currently employed by the Federal government, and for persons that are working in the private sector or are classified as not being active in the labor force. Increasing the accessibility of electronic and information technology increases the productivity and mobility of the disabled sector of the labor pool that, under existing conditions, may face barriers to their employment and advancement within the Federal workforce and in the private sector.

Question 11: The Board requests comment on the sufficiency of the benefits assessment and seeks recommendations for alternative methods of evaluating the benefits generated by the proposed rule for persons with disabilities, including the public as a whole.

Executive Order 13132: Federalism

By its terms, this proposed rule focuses on the development, procurement, maintenance or use by Federal agencies of electronic and information technology. As such, the Board believes that it does not have federalism implications within the meaning of Executive Order 13132. The Board is aware, however, that the Department of Education interprets the Assistive Technology Act (the ''AT Act''), 29 U.S.C. 3001, to require that States receiving assistance under the AT State Grants program to comply with section 508, including these standards. The Department of Education, the agency responsible for administering the AT Act, has advised the Board that it plans to issue guidance to explain specifically how these proposed standards would apply to the States for purposes of the AT Act. In this regard, the Department of Education plans to consult with State and local governments in a manner consistent with the requirements of Executive Order 13132, and to urge them to comment to the Access Board on the content of the proposed rule during the public comment period. The Board recommends that any other Federal agency considering whether (or how) to apply these standards to non-Federal entities, or any agency required to apply these standards to non-Federal entities by provision of law, should similarly conduct an appropriate consultation process with all affected stakeholders. The Board welcomes comment on any federalism implications associated with this proposed rule.

Unfunded Mandates Reform Act

The Unfunded Mandates Reform Act does not apply to proposed or final rules that enforce constitutional rights of individuals or enforce any statutory rights that prohibit discrimination on the basis of race, color, sex, national origin, age, handicap, or disability. Since the proposed rule is issued under the authority of section 508, part of title V of the Rehabilitation Act of 1973 which establishes civil rights protections for individuals with disabilities, an assessment of the rule's effects on State, local, and tribal governments, and the private sector is not required by the Unfunded Mandates Reform Act.

List of Subjects in 36 CFR Part 1194

Civil rights, Communications equipment, Computer technology, Electronic products, Government employees, Government procurement, Individuals with disabilities, Reporting and recordkeeping requirements, Telecommunications.

Thurman M. Davis, Sr.,

Chair, Architectural and Transportation Barriers Compliance Board.

For the reasons set forth in the preamble, the Board proposes to add part 1194 to Chapter XI of title 36 of the Code of Federal Regulations to read as follows:

PART 1194—ELECTRONIC AND INFORMATION TECHNOLOGY ACCESSIBILITY STANDARDS

Subpart A—General

Sec.
1194.1 Purpose.
1194.2 Application.
1194.3 General exceptions.
1194.4 Definitions.
1194.5 Equivalent facilitation.

Subpart B—Accessibility Standards

1194.21 General requirements.
1194.23 Component specific requirements.
1194.25 Requirements for compatibility with assistive technology.
1194.27 Functional performance criteria.

Subpart C—Information, Documentation, and Support

1194.31 Information, documentation, and support.

Figures to Part 1194

Authority: 29 U.S.C. 794d.

Subpart A—General

§ 1194.1 Purpose.

The purpose of this part is to implement section 508 of the Rehabilitation Act of 1973, as amended (29 U.S.C. 794d). Section 508 requires that when Federal agencies develop, procure, maintain, or use electronic and information technology, Federal

[14] U.S. Department of Commerce, Economics and Statistics Administration, ''Americans with Disabilities: 1994–95'' (P70–61), August 1997.

employees with disabilities have access to and use of information and data that is comparable to the access and use by Federal employees who are not individuals with disabilities, unless an undue burden would be imposed on the agency. Section 508 also requires that individuals with disabilities, who are members of the public seeking information or services from a Federal agency, have access to and use of information and data that is comparable to that provided to the public who are not individuals with disabilities, unless an undue burden would be imposed on the agency.

§ 1194.2 Application.

(a) When developing, procuring, maintaining, or using electronic and information technology, each agency shall comply with the requirements of this part, unless an undue burden would be imposed on the agency.

(1) When compliance with the requirements of this part imposes an undue burden, agencies shall provide individuals with disabilities with the information and data involved by an alternative means of access that allows the individual to use the information and data.

(2) When procuring a product, if an agency determines that compliance with any requirement of this part imposes an undue burden, the documentation by the agency supporting the procurement shall explain why, and to what extent, compliance with each such requirement creates an undue burden.

(b) Except as provided by § 1194.3(b), this part applies to electronic and information technology developed, procured, maintained, or used by agencies directly or used by a contractor under a contract with an agency which requires the use of such product, or requires the use, to a significant extent, of such product in the performance of a service or the furnishing of a product.

(c) This part applies to products procured by agencies when such products are:

(1) Available in the commercial marketplace;

(2) Not yet available in the commercial marketplace, but through advances in technology or performance will be available in time to satisfy the delivery requirements under a Government solicitation; or

(3) Developed in response to a Government solicitation.

(d) Products required to be accessible shall comply with all applicable provisions of this part. Section 1194.21 provides requirements that apply generally to all products. Section 1194.23 provides requirements for specific components of products and shall be applied to each component. Products may have more than one component. Section 1194.25 provides requirements for compatibility of products with assistive technology commonly used by individuals with disabilities. Section 1194.27 provides functional performance criteria for overall product evaluation and for technologies or components for which there is no specific requirement under other sections. Section 1194.31 provides requirements for information, documentation, and support.

§ 1194.3 General exceptions.

(a) This part does not apply to any telecommunications or information system operated by agencies, the function, operation, or use of which involves intelligence activities, cryptologic activities related to national security, command and control of military forces, equipment that is an integral part of a weapon or weapons system, or systems which are critical to the direct fulfillment of military or intelligence missions. Systems which are critical to the direct fulfillment of military or intelligence missions do not include a system that is to be used for routine administrative and business applications (including payroll, finance, logistics, and personnel management applications).

(b) This part does not apply to electronic and information technology that is acquired by a contractor incidental to a contract.

(c) Except as required to comply with the standards in this part, this part does not require the installation of specific accessibility-related software or the attachment of an assistive technology device at a workstation of a Federal employee who is not an individual with a disability.

(d) When agencies provide access to the public to information or data through electronic and information technology, agencies are not required to make equipment owned by the agency available for access and use by individuals with disabilities at a location other than that where the electronic and information technology is provided to the public, or to purchase equipment for access and use by individuals with disabilities at a location other than that where the electronic and information technology is provided to the public.

(e) This part shall not be construed to require a fundamental alteration in the nature of a product or its components.

§ 1194.4 Definitions.

The following definitions apply to this part:

Accessible. Electronic and information technology which complies with the requirements of this part.

Agency. Any Federal department or agency, including the United States Postal Service.

Alternate formats. Alternate formats usable by people with disabilities may include, but are not limited to, Braille, ASCII text, large print, recorded audio, and accessible internet programming or coding languages.

Alternate modes. Different means of providing information, including product documentation, to people with disabilities. Alternate modes may include, but are not limited to, voice, fax, relay service, TTY, Internet posting, captioning, text-to-speech synthesis, and audio description.

Assistive technology. Any item, piece of equipment, or system, whether acquired commercially, modified, or customized, that is commonly used to increase, maintain, or improve functional capabilities of individuals with disabilities.

Electronic and information technology. Includes information technology and any equipment or interconnected system or subsystem of equipment, that is used in the creation, conversion, or duplication of data or information. The term electronic and information technology includes, but is not limited to, telecommunications products (such as telephones), information kiosks and transaction machines, World Wide Web sites, multimedia, and office equipment such as copiers and fax machines. The term does not include any equipment that contains imbedded information technology that is used as an integral part of the product, but the principal function of which is not the acquisition, storage, manipulation, management, movement, control, display, switching, interchange, transmission, or reception of data or information. For example, HVAC (heating, ventilation, and air conditioning) equipment such as thermostats or temperature control devices, and medical equipment where information technology is integral to its operation, are not information technology.

Information technology. Any equipment or interconnected system or subsystem of equipment, that is used in the automatic acquisition, storage, manipulation, management, movement, control, display, switching, interchange, transmission, or reception of data or information. The term *information technology* includes computers,

ancillary equipment, software, firmware and similar procedures, services (including support services), and related resources.

Operable controls. A component of a product that requires physical contact for normal operation. Operable controls include, but are not limited to, mechanically operated controls, paper trays, card slots, keyboards, or keypads.

Product. Electronic and information technology.

Telecommunications. The transmission, between or among points specified by the user, of information of the user's choosing, without change in the form or content of the information as sent and received.

TTY. An abbreviation for teletypewriter. Machinery or equipment that employs interactive text based communications through the transmission of coded signals across the telephone network. TTYs may include, for example, devices known as TDDs (telecommunication display devices or telecommunication devices for deaf persons) or computers with special modems. TTYs are also called text telephones.

Undue burden. Undue burden means significant difficulty or expense. In determining whether an action would result in an undue burden, an agency shall consider all agency resources available to the agency or components for which the product is being developed, procured, maintained, or used.

§ 1194.5 Equivalent facilitation.

Nothing in this part is intended to prevent the use of designs or technologies as alternatives to those prescribed in this part provided they result in substantially equivalent or greater access to and use of a product for people with disabilities.

Subpart B—Accessibility Standards

§ 1194.21 General requirements.

(a) Color coding shall not be used as the only means of conveying information, indicating an action, prompting a response, or distinguishing a visual element.

(b) Products which are freestanding, non-portable, and intended to be used in one location and which have operable controls shall comply with the following:

(1) The position of any operable control shall be determined with respect to a vertical plane, which is 48 inches in length, centered on the operable control, and at the maximum protrusion of the product within the 48 inch length (see Fig. 1 of this part).

(2) Where any operable control is 10 inches or less behind the reference plane, the height shall be 54 inches maximum and 15 inches minimum above the floor.

(3) Where any operable control is more than 10 inches and not more than 24 inches behind the reference plane, the height shall be 46 inches maximum and 15 inches minimum above the floor.

(4) Operable controls shall not be more than 24 inches behind the reference plane (see Fig. 2 of this part).

(c) When flashing or blinking text, objects, or other elements are displayed, the flash rate shall not exceed two Hertz.

(d) If a timed response is required, at least one mode which does not require users to respond within a timed interval or allows users to adjust the timing and repetition of those intervals to at least 5 times the default setting, shall be provided.

(e) Where biometric forms of user identification or activation are used, an alternative form of identification or activation, which does not require the user to possess particular biological characteristics, shall also be provided.

(f) Where touchscreens or touch-operated controls are used, such controls shall be operable without requiring body contact or close human body proximity, or all of the operations and functions that are available through such controls shall be made available through an alternate mode that does not require body contact or close human body proximity.

§ 1194.23 Component specific requirements.

(a) *Mechanically operated controls, keyboards or keypads.* (1) Controls and keys shall be tactilely discernible without activating the controls or keys.

(2) The status of all locking or toggle controls or keys shall be visually discernible, and discernible either through touch or sound.

(3) Controls shall be operable with one hand and shall not require tight grasping, pinching, or twisting of the wrist. The force required to activate controls shall be 5 lbs. (22.2 N) maximum.

(4) All actions available or required by the product shall be available from the keyboard or keypad.

(5) If keyboard repeat is supported, the keyboard delay before repeat shall be adjustable to at least 2 seconds. Key repeat rate shall be adjustable to 2 seconds per character.

(b) *Non-embedded software applications and operating systems.*

(1) Logical navigation among interface elements shall be provided by use of keystrokes.

(2) Software shall not interfere with existing features of other products or operating systems that affect the usability for people with disabilities.

(3) A well-defined on-screen indication of the current focus shall be provided that moves among interactive interface elements as the input focus changes. The focus shall be programmatically exposed so that assistive technology can track focus and focus changes.

(4) Sufficient information about a user interface element including the identity, operation and state of the element shall be available to assistive technology.

(5) Where an image represents an interface element or the state of an interface element, there must be a way for assistive technology to associate meaningful text with the image.

(6) The use of images shall be consistent throughout an application.

(7) Text shall be provided through an application programming interface supporting interaction with assistive technology or use system text writing tools. The minimum information that shall be available to assistive technology is text content, text input caret location, and text attributes.

(8) A minimum of 8 foreground and 8 background color selections capable of producing a variety of contrast levels shall be provided.

(9) An option shall be provided to ignore individual application display attributes so system-wide settings will be maintained.

(10) Electronic forms shall allow people using assistive technology to access the information, field elements, and functionality required for completion and submission of the form including all directions and cues. Inaccessible electronic forms may be used, if an alternative accessible electronic form with equivalent information, field elements, and functionality is also provided.

(11) If animated or moving text is provided it shall also be displayable in at least one static presentation mode at the option of the user.

(c) *Web-based information or applications.*

(1) A text equivalent for every non-text element shall be provided via ''alt'' (alternative text attribute), ''longdesc'' (long description tag), or in element content.

(2) Web pages shall be designed so that all information required for navigation or meaning is not dependent on the ability to identify specific colors.

(3) Changes in the natural language (*e.g.,* English to French) of a document's text and any text equivalents shall be clearly identified.

(4) Documents shall be organized so they are readable without requiring an associated style sheet.

(5) Web pages shall update equivalents for dynamic content whenever the dynamic content changes.

(6) Redundant text links shall be provided for each active region of a server-side image map.

(7) Client-side image maps shall be used whenever possible in place of server-side image maps.

(8) Data tables shall provide identification of row and column headers.

(9) Markup shall be used to associate data cells and header cells for data tables that have two or more logical levels of row or column headers.

(10) Frames shall be titled with text that facilitates frame identification and navigation.

(11) Pages shall be usable when scripts, applets, or other programmatic objects are turned off or are not supported, or shall provide equivalent information on an alternative accessible page.

(12) Equivalent alternatives for any multimedia presentation shall be synchronized with the presentation.

(13) An appropriate method shall be used to facilitate the easy tracking of page content that provides users of assistive technology the option to skip repetitive navigation links.

(d) *Telecommunications functions.* (1) Telecommunications products which provide a function allowing voice communication and which do not themselves provide a TTY functionality shall provide a standard non-acoustic connection point for TTYs. It shall also be possible for the user to easily turn any microphone on and off to allow the user to intermix speech with TTY use.

(2) Telecommunications products which include voice communication functionality shall support use of all cross-manufacturer non-proprietary standard signals used by TTYs.

(3) Voice mail, auto-attendant, and interactive voice response telecommunications systems shall be usable by TTY users with their TTYs.

(4) Voice mail, messaging, auto-attendant, and interactive voice response telecommunications systems shall provide at least one mode which does not require users to respond within a timed interval or allows users to adjust the timing and repetition of those intervals to a minimum of 5 times the default.

(5) Where provided, caller identification and similar telecommunications functions shall also be available for users of TTYs, telecommunications relay services, and for users who cannot see displays.

(6) For transmitted voice signals, telecommunications products shall provide a gain adjustable up to a minimum of 20 dB. For incremental volume control, at least one intermediate step of 12 dB of gain shall be provided.

(7) If the telecommunications product allows a user to adjust the receive volume, a function shall be provided to automatically reset the volume to the default level after every use but not before.

(8) Where a telecommunications product delivers output by an audio transducer, which is normally held up to the ear, a means for effective magnetic wireless coupling to hearing technologies shall be provided.

(9) Interference to hearing technologies (including hearing aids, cochlear implants, and assistive listening devices) shall be reduced to the lowest possible level that allows a user of hearing technologies to utilize the telecommunications product.

(e) *Video or multimedia products.* (1) All television displays 13 inches and larger, and computer equipment that includes television receiver circuitry, shall be equipped with caption decoder circuitry which appropriately receives, decodes, and displays closed captions from broadcast, cable, videotape, and DVD signals.

(2) Television tuners, including tuner cards for use in computers, shall be equipped with secondary audio program playback circuitry.

(3) All video and multimedia productions, regardless of format, that contain speech or other audio necessary for the comprehension of the content, shall be open or closed captioned if the production is procured or developed for repeated showings to audiences that may include people with hearing impairments.

(4) All video and multimedia productions, regardless of format, that contain visual information necessary for the comprehension of the content, shall be audio described if the production is procured or developed for repeated showings to audiences that may include people with visual impairments.

(5) Display or presentation of alternate text presentation or audio descriptions shall be user-selectable unless permanent.

(f) *Information kiosks and transaction machines.* (1) Information kiosks and transaction machines shall be usable by people with disabilities without requiring an end-user to attach assistive technology to the information kiosk or transaction machine.

(2) Where information kiosks and transaction machines deliver audio output, including speech, a mechanism shall be provided for private listening and user interruptability.

(3) Where information kiosks and transaction machines deliver voice output, incremental volume control shall be provided with output amplification up to a level of at least 65 dB. Where the ambient noise level of the environment is above 45 dB, a volume gain of at least 20 dB above the ambient level shall be user selectable.

§ 1194.25 Requirements for compatibility with assistive technology.

(a) All products that act as a transport or conduit for information or communication shall pass through cross-manufacturer, non-proprietary, industry-standard codes, translation protocols, formats or other information necessary to provide the information or communication in a usable format. Technologies which use encoding, signal compression, format transformation, or similar techniques shall not remove information needed for access or shall restore it upon delivery.

(b) Where provided, at least one of each type of expansion slots, ports and connectors shall comply with publicly available industry standards.

(c) Operating system software shall not interfere with assistive technology.

(d) Products providing auditory output shall provide the auditory signal at a standard signal level through an industry standard connector.

§ 1194.27 Functional performance criteria.

(a) At least one mode of operation and information retrieval that does not require user vision shall be provided, or support for assistive technology used by people who are blind or visually impaired shall be provided.

(b) At least one mode of operation and information retrieval that does not require visual acuity greater than 20/70 shall be provided in audio and enlarged print output working together or independently, or support for assistive technology used by people who are visually impaired shall be provided.

(c) At least one mode of operation and information retrieval that does not require user hearing shall be provided, or support for assistive technology used by people who are deaf or hard of hearing shall be provided.

(d) Where audio information is important for the use of a product, at least one mode of operation and information retrieval shall be provided in an enhanced auditory fashion.

(e) At least one mode of operation and information retrieval that does not

require user speech shall be provided, or support for assistive technology shall be provided.

(f) At least one mode of operation and information retrieval that does not require fine motor control or simultaneous actions and that is operable with limited reach and strength shall be provided.

Subpart C—Information, Documentation, and Support

§ 1194.31 Information, documentation, and support.

(a) Agencies shall ensure that any product support documentation provided by the agency to end-users, is available in alternate formats upon request, at no additional charge.

(b) Agencies shall ensure that end-users have access to a description of the accessibility and compatibility features of products provided by the agency in alternate formats or alternate modes upon request, at no additional charge.

(c) Agencies shall ensure that support services for products provided by the agency, will accommodate the communication needs of end-users with disabilities.

BILLING CODE 8150–01–P

Figures to Part 1194

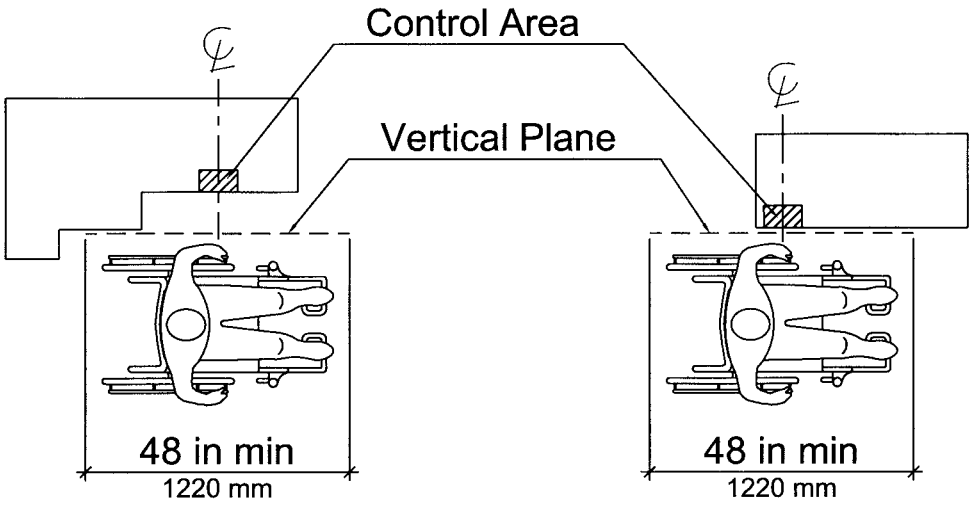

Vertical Plane Relative to the Operable Control

Figure 1

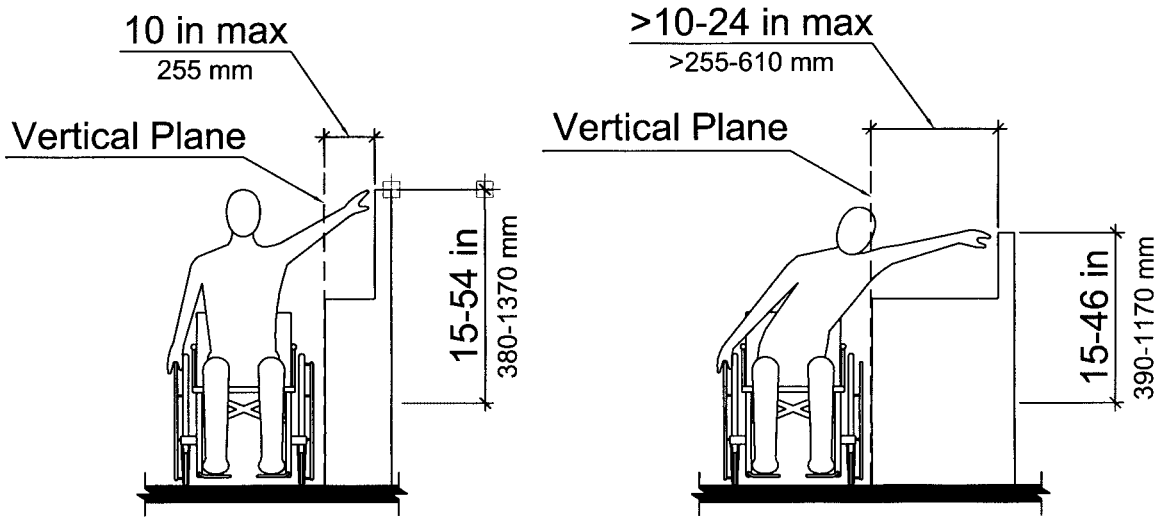

Height of Operable Control Relative to the Vertical Plane

Figure 2

[FR Doc. 00–7719 Filed 3–30–00; 8:45 am]
BILLING CODE 8150–01–C

Federal Register

Friday,
March 31, 2000

Part III

Department of Energy

Federal Energy Regulatory Commission

18 CFR Part 37

Open Access Same-Time Information System and Standards of Conduct; Final Rule

DEPARTMENT OF ENERGY

Federal Energy Regulatory Commission

18 CFR Part 37

[Docket No. RM95–9–003; Order No. 638]

Open Access Same-Time Information System and Standards of Conduct

Issued February 25, 2000.

AGENCY: Federal Energy Regulatory Commission.

ACTION: Final Rule.

SUMMARY: The Federal Energy Regulatory Commission (Commission) adopts a set of uniform business practices implementing the Commission's policies on transmission service price negotiation and on improving interactions between transmission providers and customers over OASIS nodes and amends 18 CFR 37.5 to require compliance with these practices. In addition, the Commission adopts a consistent naming convention for path names, replaces the Data Dictionary Element ''ANC SERVICE TYPE'' in the OASIS Standards and Communication Protocols Document (Version 1.3) with the term ''AS TYPE,'' and clarifies the terms ''DISPLACED,'' ''SUPERSEDED,'' and ''REFUSED'' in § 4.2.10.2 of that same document and in the Data Dictionary Element.

EFFECTIVE DATE: This Final Rule will become effective on May 30, 2000.

FOR FURTHER INFORMATION CONTACT:

Marvin Rosenberg (Technical Information), Office of Economic Policy, Federal Energy Regulatory Commission, 888 First Street, NE., Washington, DC 20426, (202) 208–1283

Paul Robb (Technical Information), Office of Electric Power Regulation, Federal Energy Regulatory Commission, 888 First Street, NE., Washington, DC 20426, (202) 219–2702

Gary D. Cohen (Legal Information), Office of the General Counsel, Federal Energy Regulatory Commission, 888 First Street, NE., Washington, DC 20426, (202) 208–0321

SUPPLEMENTARY INFORMATION:

Table of Contents

I. Introduction
II. Discussion
A. Overview
B. Background
C. Composition of CPWG Membership
D. Business Practices for Oasis Phase IA Transactions
1. *Recommended Voluntary Guides and Mandatory Standard*
2. *Standard Terminology for Transmission and Ancillary Services*
a. *Need for Standard Terminology*
b. *Attribute Values Defining the Period of Service (Standards 2.1–2.1.13)*
c. *Attribute Values Defining Service Class and Type (Standards 2.2–2.3.2)*
d. *Curtailment Priorities (Standard 2.4)*
e. *Other Service Attribute Values (Standards 2.5–2.5.9)*
f. *Scheduling Period (Standards 2.6–2.6.2)*
3. *Entity and Product Registration*
a. *Maintenance of Industry-Wide OASIS Home Page*
b. *Identification of Parties(Standard 3.1)*
c. *Registering Non-Standard Service Attributes (Standards 3.2–3.3)*
d. *Registering Points of Receipt and Delivery (Standards 3.4–3.6)*
4. *On-Line Price Negotiation and Confirmation Process*
a. *On-line Price Negotiation in Short-term Markets (Standards 4.1–4.3)*
b. *Diagram Depicting the Negotiation Process (Standards 4.4–4.5)*
c. *Negotiations Without Competing Bids (Standards 4.6–4.13)*
d. *Negotiations with Competing Bids for Constrained Resources (When Customer Has Not Yet Confirmed a Transmission Provider's Acceptance) (Standards 4.14–4.27)*
5. *Procurement of Ancillary and Other Services*
a. *Transmission Provider Requirements (Standards 5.1–5.4)*
b. *Transmission Customer Requirements (Standards 5.5–5.6)*
6. *Pathnaming Standards (Standards 6.1–6.4)*
7. *Revisions to the S&CP Document*
8. *Requests to Industry Working Groups*
9. *CPWG/How Group Recommended Revisions to the Pro Forma Tariff*
a. *Section 14.2—Reservation Priority*
b. *Section 14.7—Curtailment or Interruption of Service*
c. *Section 17.5—Response to a Completed Application*
III. *Regulatory Flexibility Act*
IV. *Environmental Statement*
V. *Public Reporting Burden*
VI. *Information Collection Statement*
VII. *Effective Date and Congressional Notification*
VIII. *Document Availability*
Attachment A—''*BUSINESS PRACTICE STANDARDS FOR OPEN ACCESS SAME-TIME INFORMATION SYSTEM (OASIS) TRANSACTIONS*''
Attachment B—Quotes sections 13.2, 14.2, 14.7, and 17.5 of the *pro forma* tariff
Attachment C—Revised Status values in section 4.2.10.2 of the S&CP Document
Attachment D—Revisions to Data Element Dictionary
Attachment E—List of Commenters to UBP NOPR

Before Commissioners: James J. Hoecker, Chairman; William L. Massey, Linda Breathitt, and Curt Hebert, Jr., Open Access Same-Time Information System and Standards of Conduct, Docket No. RM95–9–003; Order No. 638.

Final Rule

Issued February 25, 2000.

I. Introduction

In this final rule, the Federal Energy Regulatory Commission (Commission) adopts a set of uniform business practices, as set out in the attached ''Business Practice Standards for OASIS Transactions'' (BPS). The BPS implements the Commission's policies on transmission service price negotiation and on improving interactions between transmission providers and customers over Open Access Same-Time Information System (OASIS) nodes. The Commission mandates compliance with these practices by adopting a revision to 18 CFR 37.5. In addition, the Commission adopts a consistent naming convention for path names, replaces the Data Dictionary Element ''ANC SERVICE TYPE'' in the OASIS Standards and Communication Protocols Document, Version 1.3 (S&CP Document) with the term ''AS TYPE,'' and clarifies the terms ''DISPLACED,'' ''SUPERSEDED,'' and ''REFUSED'' in the Data Dictionary Element and in section 4.2.10.2 of the S&CP Document.

II. Discussion

A. Overview

In this final rule, we adopt a set of uniform business practices for use by transmission providers in conjunction with OASIS transactions. These uniform business practices are set out in the attached BPS. The Commission mandates compliance with these practices by adopting a revision to 18 CFR 37.5 that requires responsible parties to follow the standards set out in the accompanying BPS.

The uniform business practices we are here adopting are largely the same as those proposed in the notice of proposed rulemaking issued by the Commission on January 27, 1999 (UBP NOPR).[1] These uniform business practices originated as a set of recommendations from two industry groups, the Commercial Practices Working Group and the OASIS How Working Group (jointly CPWG/How Group), as presented in two 1998 filings.[2] These industry proposals, accompanied by public comment, evolved into the UBP NOPR, and after

[1] Open Access Same-Time Information System and Standards of Conduct, notice of proposed rulemaking, 64 FR 5206, 86 FERC ¶ 61,061, FERC Stats. & Regs. ¶ 32,539 (1999).

[2] The CPWG is no longer functioning. Its activities have been taken over by a successor industry group, the Market Interface Committee (MIC), also referred to in note 8 *infra*.

a review of comments on the UBP NOPR, have now further evolved into this final rule. However, as discussed below, we have made certain revisions to those proposals, to reflect Commission policy, add clarity,[3] and address comments received from interested persons. In addition, after reviewing comments on whether all of the business practices we adopt in this final rule should be adopted as mandatory standards, rather than as voluntary best practice guides, we are persuaded to do so.

In addition, as proposed in the UBP NOPR, we are adopting a consistent naming convention for path names, replacing the Data Dictionary Element ''ANC SERVICE TYPE'' in the S&CP Document with the term ''AS TYPE,'' and are clarifying the terms ''DISPLACED,'' ''SUPERSEDED,'' and ''REFUSED'' in the Data Dictionary Element and in section 4.2.10.2 of the S&CP Document.

B. Background

On June 19, 1998, the CPWG/How Group[4] filed a report entitled ''Industry Report to the Federal Energy Regulatory Commission on OASIS Phase IA Business Practices'' (June 19 Report) offering a set of uniform business practice standards and guidelines for adoption by the Commission. As explained in the UBP NOPR, the June 19 Report states that the recommended business practice standards and guides are intended to enable the Commission to implement its policy directives related to on-line price negotiation and to improve the commercial operation of OASIS. The UBP NOPR also explained that the June 19 Report states that the recommended standards and guides are intended to support FERC regulations, the *pro forma* tariff, and the S&CP Document. In a few instances, the June 19 Report recommended revisions to the *pro forma* tariff.

The June 19 Report argued that, because many OASIS-related business practice implementation details were left for transmission providers to determine for themselves, significant variation arose among business practices across OASIS nodes and influences the development of markets. To reduce this variation and to promote greater consistency in the implementation of the Commission's open access policy and OASIS policy, the CPWG/How Group proposed that the Commission adopt its recommended ''Phase IA Business Practice Standards and Guides'' (Business Practices). In addition, on September 15, 1998, CPWG/How Group filed a letter with the Commission recommending standards for transmission path naming and requesting Commission approval coincident with the start of OASIS Phase IA (*i.e.*, starting on March 1, 1999).

After notices were published and comments were received and reviewed, the Commission issued the UBP NOPR, proposing the adoption of uniform business practice guides and standards, and standards for transmission path names. The UBP NOPR largely was modeled on the business practices recommended in the June 19 Report.

In response to the UBP NOPR, comments were filed by 19 interested persons.[5] These comments are generally supportive of the UBP NOPR and of issuance of the BPS, although they contain specific suggestions for revisions. The comments will be discussed below on an issue-by-issue basis.

C. Composition of CPWG Membership

In the UBP NOPR, we reiterated the circumstances under which we would give weight to recommendations from industry working groups. We explained that consistent with Commission precedent,[6] we would heed recommendations from industry working groups only to the extent that the views of those groups reflected an open process with input from diverse industry segments.

Comments

ECI[7] argues that the Interim Market Interface Committee,[8] a new industry working group under the auspices of NERC, does not meet the Commission's criteria for inclusiveness and diversity.[9] In particular, ECI finds troublesome that MIC representatives are hand-picked by NERC, rather than elected by the membership. ECI fears this might lead NERC to choose MIC members based on their support for NERC-preferred positions, and to exclude members who oppose those views, even if those holding opposing views are more representative of that industry segment. In addition, ECI finds the current MIC requirement, that there be at least one representative from each of the ten NERC regions, lacks any built-in safeguards with respect to balancing the makeup of the regional representative group to assure the inclusion of participants from industry segments other than transmission providers. ECI argues that this results in a committee structure that is likely to remain tilted heavily in favor of transmission-owning utilities. Accordingly, ECI argues that MIC's membership selection process needs reform before the Commission should give deference to its recommendations for industry standards.

Discussion

As we stated in the UBP NOPR, we agree with ECI that unqualified deference should not be given to the recommendations of any industry group whose decisions are not made in an open inclusive process with balanced representation reflecting a broad consensus of views from all industry segments. Moreover, contrary to ECI's assertions, the UBP NOPR did not give ''unqualified deference'' to the recommendations of any industry group. This is shown by two facts: (1) The UBP NOPR contained revisions to the recommendations contained in the June 19 Report; and (2) we are issuing this Final Rule only after our consideration of comments on the UBP NOPR that we invited from any interested person.

Moreover, we reiterate that if, in the future, the MIC (or any other industry group) would like the Commission to consider its recommendations to reflect the views of the entire industry, then it is incumbent on it to demonstrate to the Commission that: (1) Its membership is open to all industry segments through an inclusive process; (2) it makes its decisions in a manner that gives fair voice to participants with diverse viewpoints from all industry segments; and (3) its activities are conducted in an open inclusive manner.[10]

[3] For example, for clarity, we are revising references in the BPS to ''providers'' to ''transmission providers.''

[4] As more fully discussed in the UBP NOPR, FERC Stats. & Regs. ¶ 32,539 at 33,606–08, and in earlier orders, *see* Open Access Same-Time Information System and Standards of Conduct, Order No. 889, FERC Stats. & Regs. ¶ 31,035 at 31,588–91 (1996), *order on reh'g,* Order No. 889–A, FERC Stats. & Regs. ¶ 31,049 at 30,549 (1997), *order on reh'g,* Order No. 889–B, 81 FERC ¶ 61,253 (1997), we greatly appreciate the invaluable ongoing efforts contributed by industry working group participants who have strived for consensus on contentious OASIS-related issues and reported on those efforts to the Commission.

[5] Identified in Attachment E.

[6] *See, e.g.*, RIN NOPR, FERC Stats. & Regs. ¶ 32,516 at 33,173–74; Order No. 889, FERC Stats. & Regs. ¶ 31,035 at 31,589, n.13; Order No. 889–A, FERC Stats. & Regs. ¶ 31,049 at 30,549, n.7.

[7] For brevity, the abbreviations used to identify the various commenters to the UBP NOPR are listed in Attachment E, and are not separately identified in the text.

[8] This committee is no longer interim and is now the ''Market Interface Committee'' (MIC) referenced in note 2.

[9] ECI Comments at 3.

[10] *See* UBP NOPR at 33,609.

On the other hand, we encourage interested persons to participate actively in those industry efforts at consensus, rather than remain silent until the Commission invites public comment. *See, e.g.*, note 87, *infra*.

D. Business Practices for Oasis Phase IA Transactions

1. Recommended Voluntary Guides and Mandatory Standards

The June 19 Report recommends certain business practices as mandatory standards and other business practices as voluntary ''best practice'' guides. In the UBP NOPR, we proposed to maintain the distinction between standards and ''best practice'' guides as recommended in the June 19 Report. At the same time, we recognized that uniform and consistent business practices are a desired result, and that consistency can best be achieved through mandatory standards rather than suggested guidelines. Accordingly, we invited comment on whether all or some guides should be adopted as standards.[11]

Comments

A number of commenters recommend that all guides be made mandatory now or in the near future.[12] ECI argues that voluntary guides defeat the objective of imposing a uniform and consistent set of business practices and proposes that all the guides be made mandatory. In the alternative, ECI proposes that we set a date certain, at which time we would revisit the voluntary guides to determine whether they should be reclassified as mandatory. At a minimum, ECI argues that Guide 4.13 (Table 4–2) [13] and Guide 4.16 (Table-3) [14] should be made standards. ECI claims that if each transmission provider is permitted different timing requirements and different priorities it will be very difficult for customers to keep up with the ''smorgasbord'' of business rules when trading power among different transmission providers.[15]

Duke argues that the guides should be mandatory and that it is not appropriate for transmission providers to pick and choose which guides to follow, and which to ignore. Duke claims that the discretionary use of best practice guides will cause confusion among OASIS users trying to learn about, and assess the importance of, differing business practices by various transmission providers. It argues that adopting the proposed standards and guides as mandatory standards would provide substantial and welcome uniformity.[16]

While Cinergy supports uniform consistent business practices, it asserts that more experience with the guides is needed before they are made mandatory. Cinergy proposes that the MIC report back in 12 months with a study containing recommendations and evaluations of the effectiveness of the standards and guides. Cinergy also argues that it is important for the Commission to differentiate in specific detail whether a guideline or standard applies to requests for firm or non-firm transmission, or both, so that incorrect assumptions are not made by the transmission provider and/or customer.'' [17]

Florida Power Corp argues that, while business practices are evolving it is important to maintain the level of flexibility provided by the guides. However, Florida Power Corp argues that it may be desirable to convert the guides into mandatory standards, after business systems and processes have further developed.

By contrast, several commenters support keeping all or some of the guides voluntary.[18] AEP argues that the distinction between the standards and guides helped the participants in the process to reach agreement on the issues. BPA claims that while there is a need for consistent business practices, it is more important to permit some deviations. Southern argues that the guides are useful to facilitate innovation.

Discussion

Our experience with the natural gas pipeline industry [19] has taught us that business practice standards, in addition to communication standards and protocols, are needed for the development of efficient markets and for the efficient use of the transmission grid.

In the UBP NOPR, we proposed to keep the distinction between the voluntary guides and standards. However, we specifically invited comment on whether we should adopt all of the proposed business practices as mandatory standards.[20] After a review of the comments, we agree with ECI and Duke that all of the business practices being adopted in this final rule should be adopted as mandatory standards.

We agree with ECI and Duke that it would be confusing to customers if each transmission provider could independently decide whether to follow a particular uniform business practice or practices or make up its own unique business practice. Removing this uncertainty will aid customers and make it easier to transact business and move power across the grid.

Moreover, the arguments opposing mandatory standards were not compelling. The commenters favoring retention of voluntary guides failed to persuade us that any potential problems outweigh the advantages that we expect to achieve from the adoption of uniform mandatory business practice standards. We believe that the standards are sufficiently developed to allow their adoption as mandatory standards and that doing so will make it easier for customers to do business. Thus, we will make all the guides mandatory standards.

As to the argument that this is a still evolving area, while we recognize that these are the first OASIS-related business practices developed by the industry and that they will need revisions and enhancements as the industry gains experience doing business with them, we do not believe that this dictates that we defer the adoption of mandatory standards until a later date. However, we request that the MIC/How Group report back to us, within 9 months of the implementation date of these standards, with their recommendations as to any necessary revisions and additions to the standards.[21]

2. Standard Terminology for Transmission and Ancillary Services

a. Need for Standard Terminology

In the June 19 Report, the CPWG/HOW Group recommends that we establish a standard set of attribute values to provide clarity and consistency in the labeling of transmission services.[22]

[11] UBP NOPR at 33,609–10.

[12] Cinergy Comments at 1, Duke Comments at 3, ECI Comments at 2, Florida Power Corp Comments at 2, TEP Comments at 1.

[13] Guide 4.13 specifies reservation timing requirements.

[14] Guide 4.16 specifies priorities for competing reservation requests.

[15] ECI Comments at 2.

[16] Duke Comments at 3.

[17] Cinergy Comments at 10.

[18] AEP Comments at 2, BPA Comments at 2, Southern Comments at 2–3.

[19] *See, e.g.*, Standards for Business Practices of Interstate Natural Gas Pipelines; Order No. 587; Final Rule, 61 FR 39,053, FERC Stats. & Regs. ¶ 31,038 at 30,058–59 (1996)

[20] UBP NOPR at 33,610.

[21] As explained in section VII, *infra*, these regulations are to become effective sixty (60) days from the date of publication of this rule in the **Federal Register**.

[22] *See* June 19 Report at section 2.A, which recommends that standard attribute values be used in OASIS transactions to the greatest extent possible.

Comments

AEP, Cinergy, and TEP [23] support requiring standard terminology for existing and standard transmission and ancillary service products. Cinergy suggests that, to encourage innovation in the market, transmission providers should be allowed to use transmission products in addition to those included in the industry standards, and to document the attributes of these products on the OASIS.[24] AEP cautions that we should not allow standardization to stifle innovation in the market, by imposing excess rigidity on the provision of transmission service.[25]

Discussion

We agree with the CPWG/How Group and commenters that standard attribute values should be used in OASIS transactions to the greatest extent possible. We disagree with concerns that this might impede flexibility and innovation in the marketplace, because standard attributes are intended to make the description of products more uniform, and are not intended as a limitation on what products may be offered. Therefore, transmission providers should use standard attributes to describe established products but, in addition, we continue to encourage transmission providers to offer additional innovative products (*i.e.*, to propose innovative services that are consistent with or superior to the *pro forma* tariff). Products with non-standard attributes are to be registered and documented on the industry-wide Home Page at www.tsin.com and on the OASIS site of the transmission provider offering such products. If the availability of such products becomes widespread, we may later add them to the list of standard attribute values.

b. Attribute Values Defining the Period of Service (Standards 2.1–2.1.13)

In the UBP NOPR, the Commission explained that the Phase IA S&CP Document, approved in the September 29, 1998 Order, provided for the inclusion of ''fixed,'' ''sliding,'' and ''extended'' transmission service period definitions. We further explained that some proposed definitions were not covered by the *pro forma* tariff, but that there was no prohibition against these services being provided under transmission providers' individual open access tariffs. In the UBP NOPR, we proposed that Standards 2.1 through 2.1.13, as shown below, be adopted.

Standard 2.1: A Transmission Provider shall use the values and definitions below for the attributes Service-Increment and Window for all transmission services offered on OASIS, or shall post alternative attribute values and associated definitions on the OASIS Home Page at www.tsin.com, or shall use existing attribute values and definitions posted by other Transmission Providers. (See Section 3 for registration requirements.)

Standard 2.1.1: Fixed Hourly—The service starts at the beginning of a clock hour and stops at the end of a clock hour.

Standard 2.1.2: Fixed Daily—The service starts at 00:00 and stops at 24:00 of the same calendar date (same as 00:00 of the next consecutive calendar date).

Standard 2.1.3: Fixed Weekly—The service starts at 00:00 on Monday and stops at 24:00 of the following Sunday (same as 00:00 of the following Monday).

Standard 2.1.4: Fixed Monthly—The service starts at 00:00 on the first date of a calendar month and stops at 24:00 on the last date of the same calendar month (same as 00:00 of the first date of the next consecutive month).

Standard 2.1.5: Fixed Yearly—The service starts at 00:00 on the first date of a calendar year and ends at 24:00 on the last date of the same calendar year (same as 00:00 of the first date of the next consecutive year).

Standard 2.1.6: Sliding Daily—The service starts at the beginning of any hour of the day and stops exactly 24 hours later at the same time on the next day.

Standard 2.1.7: Sliding Weekly—The service starts at 00:00 of any date and stops exactly 168 hours later at 00:00 on the same day of the next week.

Standard 2.1.8: Sliding Monthly—The service starts at 00:00 of any date and stops at 00:00 on the same date of the next month (28–31 days later). If there is no corresponding date in the following month, the service stops at 24:00 on the last day of the next month.

For example: Sliding Monthly starting at 00:00 on January 30 would stop at 24:00 on February 28 (same as 00:00 March 1).

Standard 2.1.9: Sliding Yearly—The service starts at 00:00 of any date and stops at 00:00 on the same date of the following year. If there is no corresponding date in the following year, the service stops at 24:00 on the last day of the same month in the following year.

For example Sliding Yearly service starting on February 29 would stop on February 28 of the following year.

Standard 2.1.10: Extended Daily—The service starts at any hour of a day and stops more than 24 hours later and less than 48 hours later.

Standard 2.1.11: Extended Weekly—The service starts at 00:00 of any date and stops at 00:00 more than one week later, but less than two weeks later.

Standard 2.1.12: Extended Monthly—The service starts at 00:00 of any date and stops at 00:00 more than one month later but less than two months later.

Standard 2.1.13: Extended Yearly—The service starts at 00:00 of any date and stops at 00:00 more than one year calendar year later but less than two calendar years later.

Comments

AEP, Duke, Florida Power Corp and VEPCO filed comments on these proposed standards. All are in support of including the products of ''Fixed,'' ''Sliding,'' and ''Extended.'' VEPCO comments that the ''sliding'' and ''extended'' services should not be required to be offered by the transmission provider, but if offered, they should conform to Standards 2.1.6 through 2.1.13, as proposed.[26] AEP comments that the ''extended'' service should be voluntary, because AEP's tariff would not permit such service. AEP also suggests that we might use the standard definitions of ''Fixed,'' ''Sliding,'' and ''Extended,'' without the more rigid definitions of 2.1.1 through 2.1.13.[27] Duke suggests changes to standards 2.1.10 through 2.1.13, to permit ''extended daily'' for up to less than 168 hours, ''extended weekly'' for up to less than four weeks, ''extended monthly'' for up to less than twelve months, and to limit ''extended yearly'' to increments of full years. According to Duke, these changes would provide additional marketplace flexibility, and in the case of ''extended yearly,'' would prohibit customers from requesting service for two peak summer seasons without paying for two full years of service.[28] Florida Power Corp opposes the expansion of service attribute definitions for locational marginal pricing and megawatt-mile pricing.[29]

Discussion

We will adopt Standards 2.1 through 2.1.13 as proposed in the UBP NOPR, except, as proposed by Duke, we will revise Standards 2.1.10 through 2.1.13 to read as follows:

2.1.10: EXTENDED DAILY—The service starts at any hour of a day and stops more than 24 hours later and less than 168 hours later.

2.1.1 1: EXTENDED WEEKLY—The service starts at 00:00 of any date and stops at 00:00 more than one week later, but less than four weeks later.

2.1.12: EXTENDED MONTHLY—The service starts at 00:00 of any date and stops at 00:00 more than one month later, but less than twelve months later.

2.1.13: EXTENDED YEARLY—The service starts at 00:00 of any date and stops at 00:00 more than one year later, but must be requested in increments of full years.

We agree with Duke that these changes will provide additional flexibility to transmission providers and customers. We also agree that the revisions to Standard 2.1.13 are

[23] TEP Comments at 2.

[24] Cinergy Comments at 2.

[25] AEP Comments at 3.

[26] VEPCO Comments at 2.

[27] AEP Comments at 4.

[28] Duke Comments at 4.

[29] Florida Power Corp Comments at 2.

appropriate. Under Standard 2.1.13, as here adopted, extended yearly service must be purchased in yearly increments, and customers reserving transmission for two peak seasons would pay for two full years of service. However, while Standard 2.1.13 would define extended yearly service as being offered in yearly increments, transmission providers may offer more flexible service, if approved by the Commission and posted in compliance with Standard 2.1.

As to the comments from VEPCO and AEP, the Commission clarifies that the products of ''sliding'' and ''extended'' service are not required to be offered. Thus, the availability of these products should not create conflicts with any transmission providers' existing tariffs.

As proposed in the UBP NOPR, the definitions of ''fixed,'' ''sliding,'' and ''extended,'' will not be expanded to include attributes for locational marginal pricing and megawatt-mile pricing since these attributes are intended to describe types of services, not prices or rate designs for services. Florida Power Corp, which filed the only comment on this issue, supported the UBP NOPR's proposal.

c. Attribute Values Defining Service Class and Type (Standards 2.2–2.3.2)

In the UBP NOPR, the Commission noted that the Phase IA S&CP Document, approved in the September 29, 1998 Order, included data templates that refer to service class and type, but that did not define these attributes. To fill this gap, the UBP NOPR, in Standards 2.2 through 2.3.2, proposed definitions for these attributes. Based on comments from interested persons, the proposed definitions differed somewhat from those recommended in the June 19 Report. The UBP NOPR proposed the following definitions:

Standard 2.2: A Transmission Provider shall use the values and definitions below to describe the service CLASS for transmission services offered on OASIS, or shall post alternative attribute values and associated definitions on the OASIS Home Page at www.tsin.com, or shall use the attribute values and definitions posted by other Providers. (See Section 3 for registration requirements.)

Standard 2.2.1: Firm—Transmission service that always has priority over NON-FIRM transmission service and includes Native Load Customers, Network Customers, and any transmission service not classified as non-firm in accordance with the definitions in the *pro forma* tariff.

Standard 2.2.2: Non-Firm—Transmission service that is reserved and/or scheduled on an as-available basis and is subject to curtailment or interruption at a lesser priority compared to Firm transmission service, Native Load Customers, and Network Customers in accordance with the definitions in the *pro forma* tariff.

Standard 2.3: A Transmission Provider shall use the values and definitions below to describe the service TYPE for transmission services offered on OASIS, or shall post alternative attribute values and associated definitions on the OASIS Home Page at www.tsin.com, or shall use the attribute values and definitions posted by other Providers. (See Section 3 for registration requirements.)

Standard 2.3.1: Point-to-point—Transmission service that is reserved and/or scheduled between specified Points of Receipt and Delivery pursuant to Part II of the *pro forma* tariff and in accordance with the definitions in the *pro forma* tariff.

Standard 2.3.2: Network—Network Integration Transmission Service that is provided to serve a Network Customer load pursuant to Part III of the *pro forma* tariff and in accordance with the definitions in the *pro forma* tariff.

Comments

VEPCO filed the only comments on this issue. VEPCO has no objection to Standards 2.2 and 2.3, provided that the disclaimer ''in accordance with the definitions in the *pro forma* tariff'' is added to each definition. VEPCO argues that, if we incorporated the *pro forma* definitions verbatim into Standards 2.2.1, 2.2.2, 2.3.1, and 2.3.2, it would avoid confusion.[30]

Discussion

As proposed in the UBP NOPR, we will include the disclaimer ''in accordance with the definitions in the *pro forma* tariff'' in Standards 2.2.1, 2.2.2, 2.3.1, and 2.3.2. As to VEPCO's contention that we should incorporate the *pro forma* tariff definitions verbatim into Standards 2.2.1, 2.2.2, 2.3.1, and 2.3.2, we considered and rejected this option when we issued the UBP NOPR and likewise will reject this option in this Final Rule. The definitions in Standards 2.2.1, 2.2.2, 2.3.1, and 2.3.2 are consistent with those in the *pro forma* tariff, but define related, somewhat different, terms. While we have incorporated *pro forma* tariff definitions verbatim when defining identical terms, the terms being defined in Standards 2.2.1, 2.2.2, 2.3.1, and 2.3.2 are not precisely the same as those defined in the *pro forma* tariff.[31] Moreover, in our view, for purposes of this rule, we need to define the precise terms defined in Standards 2.2.1, 2.2.2, 2.3.1, and 2.3.2.

In addition, for clarity we will revise Standard 2.2.2 to reflect that service to Native Load Customers and Network Customers is included within firm service under Standard 2.2.1. We therefore will adopt a revised Standard 2.2.2 that provides as follows:

Standard 2.2.2: Non-Firm—Transmission service that is reserved and/or scheduled on an as-available basis and is subject to curtailment or interruption at a lesser priority compared to Firm transmission service, including service to Native Load Customers and Network Customers, in accordance with the definitions in the *pro forma* tariff.

d. Curtailment Priorities (Standard 2.4)

Standard 2.4, as proposed in the June 19 Report, provided as follows:

Standard 2.4: A Transmission Provider shall use the curtailment priority definitions in NERC Policy 9 Security Coordinator Procedures for NERC CURTAILMENT PRIORITY (1–7) for all transmission services offered on OASIS, or shall post alternative attribute values and associated definitions on the OASIS Home Page at www.tsin.com, or shall use attribute values and definitions posted by another Provider. (See Section 3 for registration requirements.)

In the UBP NOPR, we stated that ''[w]e have not been persuaded to propose the adoption of Standard 2.4 as recommended in the June 19 Report. There is still considerable work to be accomplished in the area of developing procedures/definitions for establishing curtailment policy.'' In the UBP NOPR, we also clarified the distinction between *establishing* curtailment priorities and *displaying* curtailment priorities. We stated,

[i]n the June 18 Order, we agreed to displaying curtailment priority information in certain templates contained in the S&CP Document. However, we specifically cautioned that,

our adoption of a place on the OASIS for these data elements does not constitute an approval of the NERC or other curtailment priorities.

As we stated in *Coalition Against Private Tariffs,*[32] curtailment priorities are governed by the *pro forma* tariff.[33]

Comments

Comments on this subject were filed by Cinergy, Florida Power Corp, and VEPCO. Cinergy[34] and Florida Power Corp[35] agree with the Commission that NERC Policy 9 should not be included in the OASIS Business Practices at this time. VEPCO disagrees, however, and

[30] VEPCO Comments at 2.

[31] For example, while Standards 2.2.1 through 2.3.1 define ''Firm,'' ''Non-Firm,'' and ''Point-to-Point,'' respectively, the *pro forma* tariff, at sections 1.13, 1.18, and 1.27, defines ''Firm Point-to-Point Transmission Service,'' ''Long-Term Firm Point-to-Point Transmission Service,'' and ''Non-Firm Point-to-Point Transmission Service.''

[32] 83 FERC at 62,462.

[33] UBP NOPR at 33,638–39.

[34] Cinergy Comments at 3.

[35] Florida Power Corp Comments at 5.

urges the Commission to adopt the standard. VEPCO's position is that the NERC Curtailment Priority is a Standard Data Element defined in the S&CP Document, and the only means by which a Transmission Customer is informed on the OASIS of how the service it has requested ranks in relation to other services for curtailment purposes. VEPCO recommends that the proposed standard be adopted as a guide until such time as that curtailment policy becomes more fully developed.[36]

Discussion

As explained in the UBP NOPR, this issue (whether to adopt Standard 2.4) involves how curtailment priorities (as governed by the *pro forma* tariff) are to be displayed. It does not involve what curtailment priorities should be established.

Standard 2.4, as recommended in the June 19 Report, would require those transmission providers who do not use the NERC curtailment priority definitions to post alternative attribute values and associated definitions on the industry-wide OASIS Home Page or to use values and definitions posted on the industry-wide OASIS Home Page by other transmission providers. These attributes are used in the NERC CURTAILMENT PRIORITY and OTHER CURTAILMENT PRIORITY fields of templates described in the S&CP Document. After a review of the comments, we are persuaded by VEPCO's suggestion that NERC's Policy 9, NERC TLR Procedures, should be adopted as Standard 2.4 so that OASIS users will better understand the information being posted about curtailment priorities. However, NERC TLR Procedures have not been adopted by all transmission providers in all of NERC's regions. Thus, to add clarity, we will make minor revisions to Standard 2.4 to clarify when the definitions in NERC TLR Procedures are to be used (when a transmission provider has adopted NERC TLR Procedures) and when the alternative attribute values and associated definitions are to be used (when a transmission provider has not adopted NERC TLR Procedures). We therefore will adopt a revised Standard 2.4 that provides as follows:

Standard 2.4: A Transmission Provider that has adopted NERC TLR Procedures shall use the curtailment priority definitions contained in NERC TLR Procedures for NERC CURTAILMENT PRIORITY (1–7) for all transmission services offered on OASIS. A Transmission Provider that has adopted alternative curtailment procedures shall post its alternative attribute values and associated definitions on the OASIS Home Page at www.tsin.com, or shall use attribute values and definitions posted by another Transmission Provider. (*See* Section 3 for registration requirements.)

While we agree with Cinergy and Florida Power Corp that there is still considerable work to be accomplished in the area of developing and refining curtailment procedures,[37] this does not negate the need for current postings of curtailment priorities to be as informative as possible. Thus, we will adopt Standard 2.4 at this time, but will consider appropriate revisions to this provision in the future, if the terminology used therein becomes outdated.

e. Other Service Attribute Values (Standards 2.5–2.5.9)

In the UBP NOPR,[38] the Commission noted that Order No. 888 included six ancillary services that must be included in an open access tariff. In addition, a transmission provider may file to revise its open access tariff to include other services.[39] In the UBP NOPR, based on comments from interested persons, we deviated from recommendations in the June 19 Report and proposed the adoption of Standards 2.5 through 2.5.9, as follows:

Standard 2.5: A Transmission Provider shall use the definitions below to describe the AS TYPEs offered on OASIS, or shall post alternative attribute values and associated definitions on the OASIS Home Page at www.tsin.com, or shall use attribute values and definitions posted by another Provider. (See Section 3 for registration requirements.) FERC Ancillary Services Definitions

Standard 2.5.1: Scheduling, System Control and Dispatch Service (SC)—is necessary to the provision of basic transmission service within every control area. This service can be provided only by the operator of the control area in which the transmission facilities used are located. This is because the service is to schedule the movement of power through, out of, within, or into the control area. This service also includes the dispatch of generating resources to maintain generation/load balance and maintain security during the transaction and in accordance with section 3.1 (and Schedule 1) of the *pro forma* tariff.

Standard 2.5.2: Reactive Supply and Voltage Control from Generation Sources Service (RV)—is the provision of reactive power and voltage control by generating facilities under the control of the control area operator. This service is necessary to the provision of basic transmission service within every control area and in accordance with section 3.2 (and Schedule 2) of the *pro forma* tariff.

Standard 2.5.3: Regulation and Frequency Response Service (RF)—is provided for transmission within or into the transmission provider's control area to serve load in the area. Customers may be able to satisfy the regulation service obligation by providing generation with automatic generation control capabilities to the control area in which the load resides and in accordance with section 3.3 (and Schedule 3) of the *pro forma* tariff.

Standard 2.5.4: Energy Imbalance Service (EI)—is the service for transmission within and into the transmission provider's control area to serve load in the area. Energy imbalance represents the deviation between the scheduled and actual delivery of energy to a load in the local control area over a single hour and in accordance with section 3.4 (and Schedule 4) of the *pro forma* tariff.

Standard 2.5.5: Operating Reserve—Spinning Reserve Service (SP)—is provided by generating units that are on-line and loaded at less than maximum output. They are available to serve load immediately in an unexpected contingency, such as an unplanned outage of a generating unit and in accordance with section 3.5 (and Schedule 5) of the *pro forma* tariff.

Standard 2.5.6: Operating Reserve—Supplemental Reserve Service (SU)—is generating capacity that can be used to respond to contingency situations. Supplemental reserve, is not available instantaneously, but rather within a short period (usually ten minutes). It is provided by generating units that are on-line but unloaded, by quick-start generation, and by customer interrupted load and in accordance with section 3.6 (and Schedule 6) of the *pro forma* tariff.

Other Service Definitions

Other services may be offered to Transmission Customers through individual filed tariffs. Examples of other services that may be offered include the Interconnected Operations Services described below in Guides 2.5.7, 2.5.8, and 2.5.9. Ancillary service definitions may be offered pursuant to an individual transmission provider's specific tariff filings.

Guide 2.5.7: Dynamic Transfer (DT)—is the provision of the real-time monitoring, telemetering, computer software, hardware, communications, engineering, and administration required to electronically move all or a portion of the real energy services associated with a generator or load out of its Host Control Area into a different Electronic Control Area.

Guide 2.5.8: Real Power Transmission Losses (TL)—is the provision of capacity and energy to replace energy losses associated

[36] VEPCO Comments at 2.

[37] Subsequent to issuance of the UBP NOPR, in North American Electric Reliability Council, 88 FERC ¶ 61,046 (1999), the Commission approved a NERC compliance filing that modified NERC's transmission loading relief (TLR) procedures referred to in the UBP NOPR at 33,614–15 & n.31.

[38] UBP NOPR at 33,615 & n.32.

[39] We note that in Order No. 888, FERC Stats. & Regs. ¶ 31,036 at 31,704 & n.349, our requirement that the six ancillary services be included in an open access transmission tariff does not preclude the transmission provider from voluntarily offering other interconnected operations services to the transmission customer along with its supply of basic transmission service and ancillary services.

with transmission service on the Transmission Provider's system.

Guide 2.5.9: System Black Start Capability (BS)—is the provision of generating equipment that, following a system blackout, is able to start without an outside electrical supply. Furthermore, Black Start Capability is capable of being synchronized to the transmission system such that it can provide a startup supply source for other system capacity that can then be likewise synchronized to the transmission system to supply load as part of a process of re-energizing the transmission system.

In the UBP NOPR,[40] we also stated that we would replace the definition of ''ANC SERVICE TYPE'' with the term ''AS TYPE.''

Comments

VEPCO filed the only comments on this subject and raised no objection to the proposal in the UBP NOPR.

Discussion

Given the absence of any opposing comments, we will adopt these provisions, as proposed in the UBP NOPR, with the exception that, to add clarity, we will modify the paragraph on other service definitions, preceding Guide 2.5.7, to read as follows:

Other Service Definitions

Other services may be offered to Transmission Customers through Commission-approved revisions to their individual open access tariffs. Examples of other services that may be offered include the Interconnected Operations Services described below in Standards 2.5.7, 2.5.8, and 2.5.9. Ancillary service definitions may be offered pursuant to an individual transmission provider's specific tariff filings.

In addition, as discussed in section II.D.1, above, we will adopt proposed Guides 2.5.7–2.5.9 as Standards 2.5.7–2.5.9.

f. Scheduling Period (Standards 2.6–2.6.2)

As we explained in the UBP NOPR:

Recommended Guides 2.6, 2.6.1, and 2.6.2 refer to definitions established for the next-hour experiment, which begins November 1, 1998 and terminates March 1, 1999, with a report due to the Commission by March 31, 1999. It is premature to propose the adoption of these guides at this time, pending the outcome of the industry experiment.[41]

Guides 2.6–2.6.2, as described (but not proposed) in the UBP NOPR,[42] provided as follows:

Guide 2.6: A Transmission Provider should use the definitions below to describe the scheduling period leading up to the start time of a transaction:

2.6.1: Same-day is (i) after 2 p.m. of the preceding day and (ii) more than one hour prior to the service start time.

2.6.2: Next-hour is one hour or less prior to the service start time.

Comments

VEPCO and Florida Power Corp agree with the UBP NOPR that, pending the outcome of the Next-Hour Experiment, it is premature to adopt Guides 2.6–2.6.2.

Discussion

On September 29, 1998, the Commission authorized a four-month experiment, starting November 1, 1998, to test procedures to promote the Next-Hour market.[43] Subsequently, on July 28, 1999, the Commission reauthorized the experiment on an interim basis, until alternative solutions for electronic next-hour reservations on the OASIS are formulated and authorized.[44] In the UBP NOPR, we proposed not to adopt Guide 2.6, pending the outcome of the next-hour experiment and the development of authorized alternative solutions for electronic next-hour reservations. At the time when comments on the UBP NOPR were due to be filed, this matter was still unresolved and, therefore, the commenters agreed that it still was premature to decide this matter.

On December 15, 1999, in *North American Electric Reliability Council,* 89 FERC ¶ 61,277 (1999) (Next Hour Order), the Commission reviewed a NERC proposal presenting the industry's suggested method for treating next-hour transactions. The Commission conditionally accepted NERC's proposal for transmission providers to have the option (but not the obligation) of offering a new transmission service, Next Hour Market Service (NHM Service). Individual transmission providers may file revisions to their individual open access transmission tariffs that would authorize them to provide NHM Service, consistent with the Next Hour Order, and that would specifically describe the rates, terms, and conditions of the NHM Service to be offered; the filings may not merely incorporate the NERC proposal by reference.

Our findings in the Next Hour Order raise a number of issues not foreseen in the UBP NOPR. We believe it would still be useful to adopt definitions of the scheduling period for ''same-day'' and ''next-hour'' transactions as recommended in Guides 2.6–2.6.2, but we need to consider: (1) What is the most appropriate location within the BPS for inclusion of such definitions; (2) whether the BPS should include a definition of NHM Service;[45] (3) whether we should revise Table 4–2 (Reservation Timing Requirements) and Table 4–3 (Priorities for Competing Reservation Requests) and related provisions to reflect the availability of NHM Service and its priority vis-a-vis other transmission services; (4) whether we should adopt proposed Guides 4.2 and 4.3 (concerning requests by telephone or facsimile); and (5) whether any other revisions to the BPS are needed in light of the Next Hour Order.

Before deciding these matters, it would be helpful to have these issues considered by the OASIS How Working Group and MIC. We request that the MIC/How Group report back to the Commission, within ninety (90) days of the date of publication of this order in the **Federal Register**, with their recommendations as to any necessary revisions or additions to the BPS to reflect the Commission's findings in the Next Hour Order.

3. Entity and Product Registration

a. Maintenance of Industry-Wide OASIS Home Page

In the UBP NOPR, we proposed to allow the use of an industry-wide OASIS Home Page at www.tsin.com. We stated therein that the operator of the Home Page may only act as an agent of the transmission providers. We also stated that allowing the use of an industry-wide OASIS Home Page does not undermine the responsibilities of individual transmission providers to make their OASIS sites accessible to users and potential users, and to operate their OASIS sites in compliance with all applicable Commission orders and regulations. We proposed that, as long as transmission providers pay only reasonable fees to the third party for operating and maintaining the industry-wide OASIS Home Page, they will be able to recover these fees in their transmission rates.[46]

Comments

Florida Power Corp agrees with the UBP NOPR that the operator of the industry-wide OASIS Home Page should only act as an agent for the

[40] UBP NOPR at 33,617–18.

[41] UBP NOPR at 33,618.

[42] *Id.*

[43] Open Access Same-Time Information System (OASIS) and Standards of Conduct, 84 FERC ¶ 61,324 (1998) (September 29, 1998 Order).

[44] Open Access Same-Time Information System (OASIS) and Standards of Conduct, 88 FERC ¶ 61,100 (1999) (July 28, 1999 Order).

[45] For example, we could add a provision defining NHM Service as follows: NEXT HOUR MARKET SERVICE is non-firm transmission service that is reserved for one clock hour and is requested within sixty (60) minutes before the start of the next clock hour for service commencing at the start of the clock hour.

[46] UBP NOPR at 33,619.

transmission providers, and not as an independent entity.[47] PJM questions the need for an industry-wide OASIS Home Page for customer registration since each OASIS node must determine its own registration/access requirements.[48] PJM argues that transmission providers should be permitted to decide whether to post their own registration information, and service definitions, or to contract with the operator of www.tsin.com to do so. Cinergy supports the creation of an industry-wide OASIS Home Page, where potential OASIS users could centrally register for rights to use any individual OASIS site, but seeks clarification of whether registration on such a Home Page would be mandatory or voluntary.[49]

Florida Power Corp proposes that the costs of the OASIS registration process be borne by transmission providers and recovered in open access transmission rates.[50] TEP argues that both customers and transmission providers should be assessed a fee for using the registration process because both would benefit from it. PJM argues that only OASIS users who purchase transmission service products should be required to register at the industry-wide site and that users who only want information from OASIS should be able to get it without charge. PJM claims that the www.tsin.com site is also used in the NERC tagging process and argues that it would be difficult to allocate the costs between OASIS activities and tagging.[51]

Discussion

We expect that a single industry-wide OASIS Home Page for registration that keeps track of OASIS users, transmission providers, and transmission providers' services, would have great benefits.[52] However, we are still concerned that an entity not subject to the Commission's jurisdiction would be setting fees for the use of the industry-wide OASIS Home Page. Thus, we will require transmission providers to: (1) Use the industry-wide OASIS Home Page at www.tsin.com; and (2) ensure that the third-party operator of the industry-wide OASIS Home Page acts as an agent on behalf of affected transmission providers.[53] In our view, such an arrangement would create a mechanism for transmission providers to recover the reasonable fees they paid for the operation and maintenance of the industry-wide OASIS Home Page, while keeping transmission providers responsible for ensuring that the industry-wide OASIS Home Page is properly operated.

b. Identification of Parties (Standard 3.1)

For electronic commerce to succeed, there must be unambiguous identification of the parties to a transaction. In the UBP NOPR, we proposed to adopt the following standard for identification of the parties:

Standard 3.1: All entities or persons using OASIS shall register the identity of their organization (including DUNS number) or person at the OASIS Home Page at www.tsin.com. Registration shall be completed prior to the commencement of Phase IA and renewed annually and whenever changes in identification occur and thereafter. An entity or person not complying with this requirement may be denied access by a provider to that provider's OASIS node.

Comments

Cinergy, TEP, and VEPCO largely support the Commission's proposal in the UBP NOPR.[54] However, Cinergy argues that DUNS numbers do not provide a sufficient link between the DUNS number of the reporting organization and its parent entity. Cinergy argues that such a link is needed for financial guarantee and credit purposes. To remedy this problem, Cinergy proposes that the registration process be revised to include the FERC-registered entity of the reporting organization and that OASIS registrants be required to update this information, whenever necessary to reflect changes in registrants' corporate structures.[55]

Discussion

We agree with Cinergy that it is important that each OASIS registrant provide a link between the registering organization and its parent entity. In addition, Phase IA already has commenced and thus can no longer be used as the deadline for registration. We therefore will adopt a modified Standard 3.1, which provides as follows:

Standard 3.1: All entities or persons using OASIS shall register the identity of their organization (including DUNS number) or person at the OASIS Home Page at www.tsin.com. Registration identification shall include the parent entity (if any) of the registrant. Registration shall be a prerequisite to OASIS usage and renewed annually and whenever changes in identification occur and thereafter. An entity or person not complying with this requirement may be denied access by a transmission provider to that transmission provider's OASIS node.

c. Registering Non-Standard Service Attributes (Standards 3.2–3.3)

In the UBP NOPR, the Commission explained that the OASIS Phase IA S&CP Document, approved in the September 29, 1998 Order, uses attributes to define services. However, the S&CP Document does not define the attributes.[56] While standard definitions are addressed in sections II.D.2–II.D.4 and II.D.6, above, the UBP NOPR also proposed Standard 3.2 and Guide 3.3, to deal with circumstances when standardized attributes and definitions are not appropriate. Standard 3.2 and Guide 3.3, as proposed in the UBP NOPR, provide as follows:

Standard 3.2: Providers of transmission and ancillary services shall use only attribute values and definitions that have been registered on the OASIS Home Page at www.tsin.com for all transmission and ancillary services offered on their OASIS.

Guide 3.3: Providers of transmission and ancillary services should endeavor to use on their OASIS nodes attribute values and definitions that have been posted by other Providers on the OASIS Home Page at www.tsin.com whenever possible.

In addition, in the UBP NOPR,[57] the Commission agreed with the June 19 Report that monitoring is needed to ensure that the non-standard attribute naming process is not abused, and invited comment on which group would be the proper group to perform this function.

Comments

Cinergy, PJM, Southern, and VEPCO filed comments on this issue. Cinergy[58] and Southern[59] suggest that the MIC, the successor to the Commercial Practices Working Group, is the best group to monitor the attribute registration process to ensure that the non-standard attribute naming process is not abused. PJM asserts that monitoring is not necessary; that parties can resolve their own disputes, and that, if these steps fail, parties may, as a last resort, file complaints with the Commission.[60] VEPCO supports the adoption of Standard 3.2 and Guide 3.3,

[47] While the *Industry Report on OASIS Phase IA Business Practices* did not identify the party operating the www.tsin.com industry-wide OASIS Home Page, we have subsequently learned that it is operated by NERC.

[48] Florida Power Corp Comments at 3, TEP Comments at 4.

[49] Cinergy Comments at 3.

[50] Florida Power Corp Comments at 3.

[51] PJM Comments at 4–5.

[52] Registration at the industry-wide OASIS Home Page would replace registration at individual OASIS sites.

[53] UBP NOPR at 33,618–19.

[54] Cinergy Comments at 3, TEP Comments at 4, VEPCO Comments at 3.

[55] Cinergy Comments 3–4.

[56] *See* June 19 Report at section 2.

[57] UBP NOPR at 33,620–21.

[58] Cinergy Comments at 4.

[59] Southern Comments at 3.

[60] PJM Comments at 4.

and recommends that any market participant be allowed to monitor the process for naming non-standard attributes and that complaints can be informally submitted to the MIC for resolution.[61]

Discussion

None of the commenters objected to the proposal in the UBP NOPR that Standard 3.2 and Guide 3.3 be included in the BPS. Thus, we will adopt Standard 3.2 as proposed in the UBP NOPR and, as discussed in section II.D.1, above, we will adopt proposed Guide 3.3 as Standard 3.3.

Furthermore, we find merit in the suggestion from Cinergy and Southern[62] that the NERC-sponsored MIC is the appropriate group to monitor the non-standard attribute registration process. We also agree with VEPCO that any market participant may monitor the process. We believe, contrary to PJM's position, that there are sufficient differences in product attributes (*i.e.,* the names used to identify different products) in the marketplace to warrant a monitoring effort. Furthermore, the Commission is prepared to respond to any complaint that might arise as a result of an unresolved dispute.

d. Registering Points of Receipt and Delivery (Standards 3.4–3.6)

Based on the principle that transmission providers should be encouraged to apply consistent names for connecting paths or common paths, the UBP NOPR proposed the adoption of Standards 3.4 and 3.5 and Guide 3.6. In addition, we requested comments on what would be the appropriate entity to monitor this process and whether this function should be performed in tandem with the monitoring of registration of non-standard attributes. Standards 3.4 and 3.5 and Guide 3.6, as proposed in the UBP NOPR, provide as follows:

Standard 3.4: A Transmission Provider shall register and thereafter maintain on the OASIS Home Page at www.tsin.com all Points of Receipt and Delivery to and from which a Transmission Customer may reserve and schedule transmission service.

Standard 3.5: For each reservable Path posted on their OASIS nodes, Transmission Providers shall indicate the available Point(s) of Receipt and Delivery for that Path. These Points of Receipt and Delivery shall be from the list registered on the OASIS Home Page at www.tsin.com.

Guide 3.6: When two or more Transmission Providers share common Points of Receipt or Delivery, or when a Path connects Points of Receipt and Delivery in neighboring systems, the Transmission Providers owning and/or operating those facilities should apply consistent names for those connecting paths or common paths on the OASIS.

Comments

Comments were filed by Cinergy, Florida Power Corp, and VEPCO. Cinergy suggests that the NERC-sponsored MIC is the best group to monitor the registration of points of receipt (PORs) and delivery (PODs).[63]

Florida Power Corp supports a central point for all registration activities to streamline and bring more consistency to these activities. In addition, Florida Power Corp recommends that NERC would be the best group to monitor the registration of PORs and PODs.[64]

VEPCO recommends that any market participant be allowed to monitor compliance with these standards and that complaints can be informally submitted to the MIC for resolution.[65] VEPCO further suggests that the registration process should allow a transmission provider to identify its neighbor's name for a common path as an alias to its own name for that path when they cannot agree on a single name.

Discussion

We will include Standards 3.4, 3.5, and 3.6[66] in the BPS we are adopting in this Final Rule for several reasons. First, given that there was no objection expressed by any commenters, we see no reason to depart from our proposal on this subject in the UBP NOPR. Second, we remain persuaded that a monitoring effort is appropriate to reduce confusion in the market. Nothing in the comments seeks to dissuade us from this view. Third, the Commission agrees with the comments from Cinergy (as supported in part by Florida Power Corp and VEPCO) that the MIC is the appropriate group to monitor the POR/POD registration process. In fact, no alternative group seems as well positioned to handle this responsibility. Finally, the Commission is prepared to deal with any complaint that might arise as a result of an unresolved dispute.

4. On-Line Price Negotiation and Confirmation Process

a. On-line Price Negotiation in Short-term Markets (Standards 4.1–4.3)

In the UBP NOPR, the Commission proposed the adoption of Standard 4.1 (proposed as a Guide in the June 19 Report) because it restates existing Commission policy, as follows:

Standard 4.1: Consistent with FERC policy and regulations, all reservations and price negotiations should be conducted on OASIS.

The UBP NOPR did not propose the adoption of recommended Guides 4.2 and 4.3 from the June 19 Report,[67] because these guides are essentially the same as those proposed by the CPWG/How Group in a June 1998 letter requesting a four-month next-hour experiment.[68]

Comments

Florida Power Corp and VEPCO agree with the proposal to adopt Standard 4.1.[69] VEPCO suggests that Standard 4.1 be reworded to state explicitly that reservations for network service are not conducted on the OASIS, as follows: ''[c]onsistent with FERC policy and regulations, all Point-to-Point requests, associated ancillary service requests, and price negotiations for such requests, should be conducted on OASIS.''

Discussion

As proposed in the UBP NOPR, we adopt Standard 4.1 and not Guides 4.2 and 4.3. We reject VEPCO's suggestion that Standard 4.1 be reworded to state

[61] VEPCO Comments at 3.

[62] While VEPCO did not specifically propose that monitoring functions be assigned to the MIC, it did suggest that informal complaints be submitted to that group for resolution.

[63] Cinergy Comments at 4.

[64] Florida Power Corp Comments at 4.

[65] VEPCO Comments at 3.

[66] As discussed in section II.D.1, above, we are adopting as Standard 3.6 what was proposed as Guide 3.6 in the UBP NOPR.

[67] The June 19 Report recommended adoption of Guides 4.2 and 4.3 as follows:

Guide 4.2: The following is considered ''on the OASIS'' during Phase 1–A: For a transmission service of hourly duration, requested within the next-hour, a Customer should have the option, subject to the exception allowed by Guide 4.3, of entering a reservation and schedule request electronically on the Provider's OASIS and scheduling system (if such electronic transactions are allowed on the Provider's scheduling system), or arranging the reservation and schedule verbally with the Provider. If a transmission reservation is confirmed verbally, the Provider should have the option of requiring the Customer to enter the reservation on OASIS electronically within one hour after the start of the reservation.

Guide 4.3: If a Provider's OASIS and scheduling processes allow that a Customer's reservation and scheduling requests will be accepted or refused within 15 minutes of the queue time, then the Provider may require that reservations and schedules be entered electronically by the Customer prior to the established scheduling deadline. If in any case the Provider has not responded to the reservation and schedule request within 15 minutes, the Customer has the option of calling the Provider to verbally confirm the reservation and schedule.

[68] *See* discussion in section II.D.2.f above and letter dated October 19, 1999 from NERC in Docket No. ER00–157–000.

[69] Florida Power Corp Comments at 5, VEPCO Comments at 3–4.

that only Point-to-Point service is reserved on the OASIS. The purpose of Standard 4.1 is not to specify what types of transmission transactions are to be conducted on the OASIS, but to clarify that, consistent with FERC policy and regulations, reservations and price negotiations, and not just final transactions, are to be conducted on the OASIS.[70] Moreover, the Commission's Next Hour Order[71] makes Guides 4.2 and 4.3 moot for those transmission providers who file revisions to their individual open access transmission tariffs authorizing them to provide NHM Service. In section II.D.2.f, above, we requested that the MIC/How Group report back to us on various issues related to NHM Service. These issues include the question of whether they still recommend that we adopt proposed Guides 4.2 and 4.3.

b. Diagram Depicting the Negotiation Process (Standards 4.4–4.5)

In the UBP NOPR, we noted that the Process State Diagram proposed in Guide 4.4 (Figure 4–1) is the same as the Diagram of Purchase Transactions (State Diagram) contained in Exhibit 4–1 of Version 1.3 of the S&CP Document. To avoid possible future conflict between the BPS and the S&CP Document, we proposed to incorporate by reference Exhibit 4–1 into the BPS.[72] Guide 4.4, as proposed in the UBP NOPR, provides as follows:

Guide 4.4: The state diagram appearing in Exhibit 4–1 in Section 4.2.10.2 of the Version 1.3 of the S&CP Document constitutes a recommended business practice in OASIS Phase IA.

Exhibit 4–1 of section 4.2.10.2 of the S&CP Document is as follows:

BILLING CODE 6717–01–U

[70] Our previous decisions defining what constitutes an on-the-OASIS transaction during OASIS Phase IA still stand.

[71] This order is further discussed in section II.D.2.f above.

[72] UBP NOPR at 33,626.

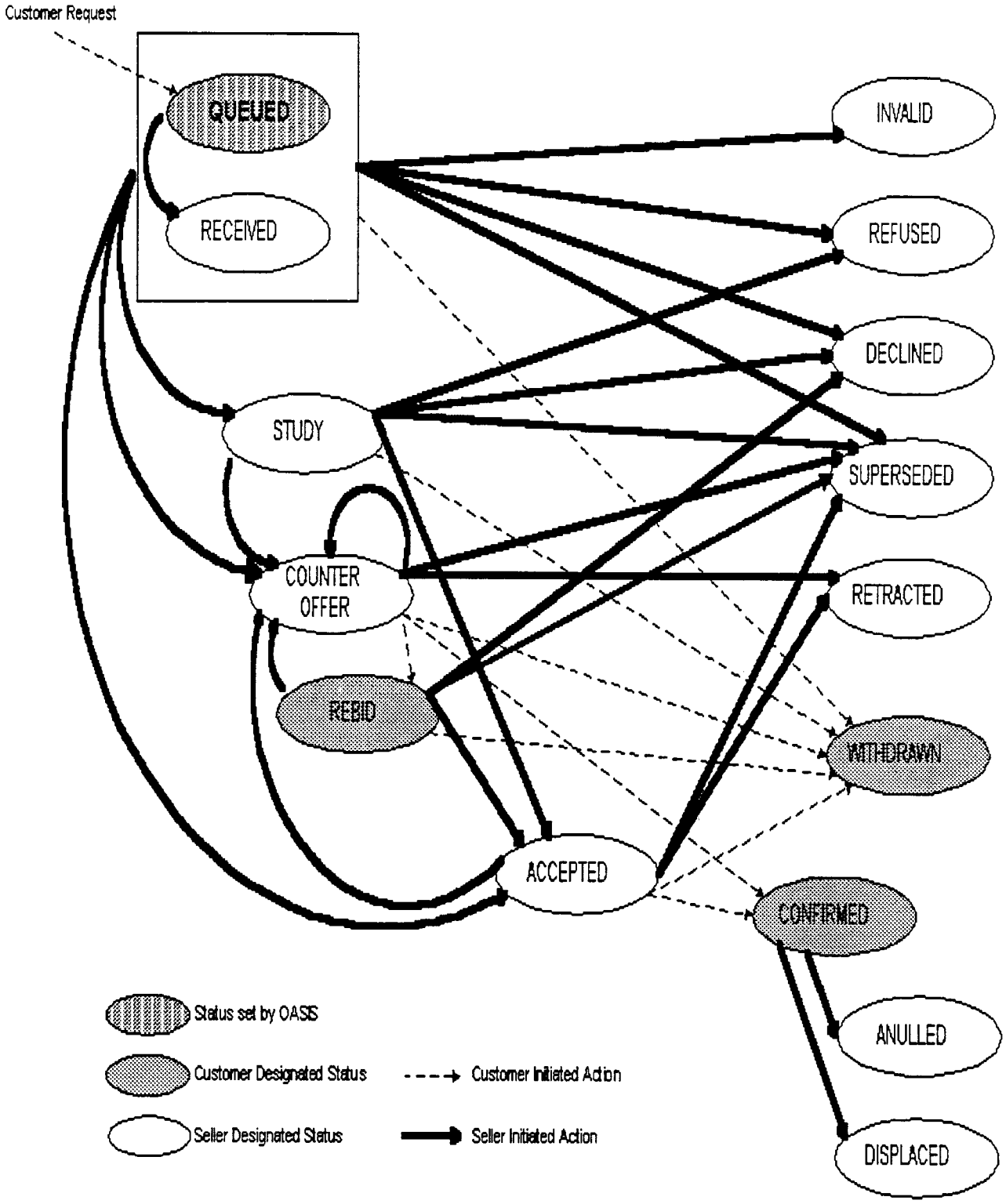

BILLING CODE 6717–01–C

Similarly, we also noted in the UBP NOPR that the table of definitions of the process states in Guide 4.5 (Table 4–1) is similar to the definitions of the same terms appearing at section 4.2.10.2 (status values) of the S&CP Document. To avoid possible future conflict between the BPS and the S&CP Document we proposed to incorporate by reference the definitions in section 4.2.10.2 of the S&CP Document into the BPS. Guide 4.5, as proposed in the UBP NOPR, provides as follows:

Guide 4.5: The definitions in Section 4.2.10.2 of the Version 1.3 of the S&CP Document (status values) should be applied to the process states in OASIS Phase IA.

In the UBP NOPR, we also proposed to improve the definition of ''SUPERSEDED'' appearing in section 4.2.10.2 and in the Data Element Dictionary of the S&CP Document by substituting the word ''preempted'' for ''displaced.'' The section 4.2.10.2 definitions (status values), as proposed in the UBP NOPR, are as follows:

The possible STATUS values are:

QUEUED = initial status assigned by TSIP on receipt of ''customer services purchase request.''

INVALID = assigned by TSIP or Provider indicating an invalid field in the request, such as improper POR, POD, source, sink, etc. (Final state).

RECEIVED = assigned by Provider or Seller to acknowledge QUEUED requests and indicate the service request is being evaluated, including for completing the required ancillary services.

STUDY= assigned by Provider or Seller to indicate some level of study is required or being performed to evaluate service request.

REFUSED = assigned by Provider or Seller to indicate service request has been denied due to lack of availability of transmission capability. SELLER COMMENTS should be used to communicate details for denial of service. (Final state).

COUNTEROFFER = assigned by Provider or Seller to indicate that a new OFFER PRICE is being proposed.

REBID = assigned by Customer to indicate that a new BID PRICE is being proposed.

SUPERSEDED = assigned by Provider or Seller when a request which has not yet been confirmed is preempted by another reservation request. (Final state).

ACCEPTED = assigned by Provider or Seller to indicate the service request at the designated OFFER PRICE has been approved/accepted. If the reservation request was submitted PRECONFIRMED, the OASIS Node shall immediately set the reservation status to CONFIRMED. Depending upon the type of ancillary services required, the Seller may or may not require all ancillary service reservations to be completed before accepting a request.

DECLINED = assigned by Provider or Seller to indicate that the BID PRICE is unacceptable and that negotiations are terminated. SELLER COMMENTS should be used to communicate reason for denial of service. (Final state).

CONFIRMED = assigned by Customer in response to Provider or Seller posting ''ACCEPTED'' status, to confirm service. Once a request has been ''CONFIRMED,'' a transmission service reservation exists. (Final state, unless overridden by DISPLACED or ANNULLED state).

WITHDRAWN = assigned by Customer at any point in request evaluation to withdraw the request from any further action. (Final state).

DISPLACED = assigned by Provider or Seller when a ''CONFIRMED'' reservation from a Customer is displaced by a longer term reservation and the Customer has exercised right of first refusal (*i.e.,* refused to match terms of new request). (Final state).[[73]]

ANNULLED = assigned by Provider or Seller when, by mutual agreement with the Customer, a confirmed reservation is to be voided. (Final state).

RETRACTED = assigned by Provider or Seller when the Customer fails to confirm or withdraw the request within the required time period. (Final state).

In addition, the definition of the term ''REBID'' appearing in section 4.2.10.2 and in the Data Element Dictionary of the S&CP Document refers to price only. In the UBP NOPR, [74] we requested comment on whether the use of REBID should be limited to price, or whether it would be feasible and/or desirable to allow REBID to lengthen the duration of the period of the requested service.

Comments

VEPCO supports the proposal in the UBP NOPR to incorporate by reference the State Diagram appearing in Exhibit 4–1 in section 4.2.10.2 and the definitions in section 4.2.10.2 of the S&CP Document, as Guides 4.4 and 4.5, respectively, of the BPS. [75] Cinergy and VEPCO support the proposal in the UBP NOPR to improve the definition of ''SUPERSEDED'' by replacing the word ''displaced'' with ''preempted.'' [76]

VEPCO sees an apparent conflict between the definition of REBID, which states that it is ''assigned by Customer to indicate that a new BID PRICE is being proposed,'' and the State Diagram, which does not permit a customer-initiated change of status from ACCEPTED to REBID. [77]

In response to the UBP NOPR's request for comments on whether customers should be able to rebid duration as well as price, Duke and VEPCO argue that the REBID should be limited to price only. Duke argues that allowing customers to REBID duration could cause confusion and lead to gaming of the first-come-first-served process. [78] Duke explains that permitting customers to rebid duration could result in delays if the transmission provider is forced to perform a study to determine if capacity is available for the expanded period. VEPCO argues that it is not evident that there is a need for this type of negotiation and that it would be very expensive to convert back-office systems to allow the expanded definition of REBID.

Cinergy supports rebidding of both duration and price. [79] However, it argues that there is a conflict between the guides and the S&CP Document regarding REBID of duration. Cinergy cites Row 7 of Table 4–3 (Guide 4.16) as permitting rebidding of duration by providing that a subsequent request for non-firm point-to-point of a longer duration entitles an earlier non-firm point-to-point request to a right-of-first-refusal. Cinergy also cites the S&CP Document, at section 4.2.10.2, as not permitting rebidding of duration because REBID is defined solely in terms of price. Cinergy argues that this is inconsistent and asks that we issue a clarification reconciling the two provisions.

Cinergy also argues that Guide 4.5 needs more work before it can be made a standard. [80]

Discussion

As we proposed in the UBP NOPR, we will: (1) Incorporate by reference Exhibit 4–1 (State Diagram) and the Status Values of section 4.2.10.2 of the S&CP Document into the BPS; (2) revise the definition of ''SUPERSEDED'' by replacing the word ''displaced'' with ''preempted'' in section 4.2.10.2 and in the Data Element Dictionary of the S&CP Document; and (3) revise the definition of ''REFUSED'' to insert the words ''lack of'' before ''availability,'' as discussed later in this section. [81]

Regarding VEPCO's request for clarification of whether a customer can initiate a change of status from ACCEPTED to REBID, we agree with VEPCO that the State Diagram does not permit a customer to change ACCEPTED to REBID. We disagree, however, with VEPCO's interpretation of the definition

[73] As discussed in section II.D.7, below, we are revising this proposed definition to: (1) Insert the word ''not'' before ''exercised;'' and (2) to insert the words ''if any'' after ''refusal.''

[74] UBP NOPR at 33,625 n.71.

[75] VEPCO Comments at 4.

[76] Cinergy Comments at 9, VEPCO Comments at 4.

[77] VEPCO Comments at 4.

[78] Duke Comments at 5, VEPCO Comments at 5.

[79] Cinergy Comments at 5.

[80] Cinergy Comments at 5–9.

[81] In addition, in section II.D.7, below, we will order an additional revision to these definitions.

of REBID. While this definition allows a customer to initiate a new BID PRICE, it does not state that this may be done after an offer is accepted. Thus, we do not see the definitions as being in conflict with the State Diagram, and VEPCO has not convinced us of the need to revise the referenced definitions.

With regard to the issue of whether REBID should be used to rebid both duration and price, we need to draw a distinction between REBID during the negotiation process and exercising the right-of-first-refusal. A REBID differs from exercising the right-of-first-refusal that occurs after a reservation request has been accepted by the transmission provider. The State Diagram provides that the right-of-first-refusal be carried out through COUNTEROFFER and REBID and thus introduces the confusion cited by Cinergy. Cinergy finds troublesome the conflict between Row 7 of Guide 4.16 (Table 4–3) (permitting rebidding of duration when exercising the right-of-first-refusal) and the definition of REBID in section 4.2.10.2 of the S&CP Document (that only allows the rebidding of price). VEPCO proposes, in its comments on section 4.19, to add a ''pre-empted with right-of-first-refusal'' status to the State Diagram in the S&CP Document. We agree that this would make a clear distinction between rebidding during negotiation and the right-of-first-refusal.

We request that, within ninety (90) days of the date of publication of this Final Rule in the **Federal Register**, the MIC/How Group submit its recommendations on any necessary changes to the State Diagram and definitions in the S&CP Document to accommodate: (1) A transmission provider notifying a customer of its right-of-first-refusal; and (2) a customer making use of its right-of-first-refusal.

For the reasons discussed in section II.D.1, above, we will deny Cinergy's request that Guide 4.5 remain voluntary. As proposed in the UBP NOPR, we are revising Guide 4.4 to incorporate by reference Exhibit 4–1 (State Diagram) of the S&CP Document and are revising Guide 4.5 to incorporate by reference the definitions contained in section 4.2.10.2 of the S&CP Document. In addition, as discussed in section II.D.1, above, we will adopt Guides 4.4 and 4.5 as Standards 4.4 and 4.5.

In addition, the definition of DISPLACED in section 4.2.10.2 of the S&CP Document erroneously states that it would apply to a customer who has exercised its right-of-first-refusal, when it actually is supposed to apply to a customer who does not exercise this right. We will take this opportunity to correct this error in both the Data Element Dictionary and in section 4.2.10.2 of the S&CP Document.

c. Negotiations Without Competing Bids (Standards 4.6–4.13)

In *Commonwealth Edison Company,* 80 FERC ¶ 61,167 at 61,719 (1997), we stated that we were ''reluctant to specify confirmation time limits without first soliciting the views of representative industry segments.'' We also noted that we had asked the industry to address this issue in its Phase II Report.[82] After receipt of the Phase II Report, and consistent with *Commonwealth Edison,* we requested that the CPWG examine the development of predetermined deadlines for acceptances by transmission providers of transmission service requests and confirmations by customers of their requests.[83] We did this because we received comments that convinced us that the parties to negotiations require decisions to be made quickly and in a known time frame. The CPWG/How Group responded to our request by proposing Guides 4.6 and 4.13.[84]

In the UBP NOPR,[85] we proposed to clarify the definition of ''REFUSED'' in the Data Element Dictionary and in section 4.2.10.2 of the S&CP Document (and which is referred to in Guide 4.6) by inserting the words ''lack of'' before the word ''availability.''

Standard 4.6—Reservation Timing Requirements

Guide 4.6 and 4.13 are inextricably connected. We will discuss Guide 4.6, and the comments relating thereto, as part of our discussion of Guide 4.13.

Standard 4.7—Evaluating ATC Prior to Acceptance, Counteroffer, or Refusal

Guide 4.7, as proposed in the UBP NOPR, provides that a Transmission Provider shall determine whether the requested transmission capacity is available before changing the status of a request to ACCEPTED, COUNTEROFFER, or REFUSED. The exact language of Guide 4.7, as proposed in the UBP NOPR, is as follows:

Guide 4.7: Prior to setting a request to ACCEPTED, COUNTEROFFER, or REFUSED a Provider shall evaluate the appropriate resources and ascertain that the requested transfer capability is (or is not) available.

Comments

VEPCO argues that it would be irresponsible for a transmission provider to change the status of a request to ACCEPTED, COUNTEROFFER, or REFUSED unless the available transfer capability (ATC) has been verified. VEPCO suggests that this guide be made a standard.

Discussion

We agree with VEPCO that ATC must be evaluated before a request is accepted, counteroffered, or refused. Thus, as proposed in the UBP NOPR, we will adopt Guide 4.7. Moreover, as discussed in section II.D.1, above, we will adopt this proposed guide as a standard (Standard 4.7).

Standard 4.8—Invalid or Refused Requests

Guide 4.8 provides that when a request is set to the REFUSED or INVALID states the Transmission Provider should indicate the reason the request was refused or found invalid in the COMMENTS field. The exact language of Guide 4.8, as proposed in the UBP NOPR, is as follows:

Guide 4.8: For any request that is REFUSED or INVALID, the Transmission Provider should indicate in the COMMENTS field the reason the request was refused or invalid.

Comments

VEPCO requests clarification that the COMMENTS field referred to in Guide 4.8 is the STATUS COMMENT field. With this clarification, VEPCO requests that this guide be made a standard.[86]

Discussion

VEPCO is correct that the COMMENTS field referred to in Guide 4.8 is the STATUS COMMENT field of the TRANSSTATUS template of the S&CP Document.[87] We will revise Guide

[82] *See also* Wisconsin Electric Power Company, 80 FERC ¶ 61,299 at 62,049 (1997). The industry's Phase II Report was filed with the Commission on November 3, 1997.

[83] *See* Open Access Same-Time Information System and Standards of Conduct, *Order on OASIS Related-Issues,* 83 FERC ¶ 61,301 (1998).

[84] UBP NOPR at 33,627.

[85] UBP NOPR at 33,629 n.88.

[86] VEPCO Comments at 6.

[87] Although, in this instance, we are adopting VEPCO's suggested clarification, in the future, we encourage VEPCO and other commenters seeking revisions to the BPS to bring their suggestions for editorial and purely technical comments directly to the applicable industry working group before raising these matters with the Commission in comments to a NOPR. We reach this conclusion for three reasons. First, we believe that it is more productive for commenters to participate directly in the industry-led efforts to reach consensus on these issues, rather than to stand silent on the sidelines and propose last-minute changes not subject to peer review and debate. Second, direct participation in industry working groups would give the Commission greater confidence that the proposals would not have any unintended adverse consequences, or hidden ramifications. Third, to the extent that these proposals offer non-controversial technical and editorial revisions, it should not be burdensome for parties to raise them before the applicable industry-led working group in

4.8 to clarify this point. In addition, as discussed in section II.D.1, above, we will make this guide a standard. Further, consistent with our decision to adopt this provision as a standard, we will substitute the word ''must'' for the word ''should,'' which suggests that compliance is not mandatory. With these changes, we will adopt Standard 4.8, as follows:

Standard 4.8: For any request that is REFUSED or INVALID, the Transmission Provider must indicate in the STATUS COMMENT field of the TRANSSTATUS template the reason the request was refused or invalid.

Standard 4.9—Withdrawn Requests

Guide 4.9, as proposed in the UBP NOPR, would permit a customer to withdraw a request at any time before it is confirmed:

Guide 4.9: The Customer may change a request to WITHDRAWN at any time prior to it being CONFIRMED.

Comments

VEPCO argues that, while Guide 4.9 is correct, it could be made clearer by specifying the status values included. Accordingly, VEPCO proposes the following revision: ''The Customer may change a request from QUEUED, RECEIVED, STUDY, COUNTEROFFER, REBID, or ACCEPTED to WITHDRAWN at any time prior to CONFIRMED.'' VEPCO also suggests that this guide be made a standard.[88]

Discussion

We agree with VEPCO that it would be beneficial to define explicitly the circumstances when a customer could withdraw a request prior to confirmation. Thus, we will make the requested change so that a customer's choices for states that can be changed to WITHDRAWN, prior to confirmation, are specifically enumerated. Also, as discussed in section II.D.1, above, we will adopt this guide as a standard. With these changes, we will adopt Standard 4.9, as follows:

Standard 4.9: The Customer may change a request from QUEUED, RECEIVED, STUDY, COUNTEROFFER, REBID, or ACCEPTED to WITHDRAWN at any time prior to CONFIRMED.

Standard 4.10—Changing Accepted or Counteroffer Status

Guide 4.10, as proposed in the UBP NOPR, permits a customer to change the state of his request from ACCEPTED or COUNTEROFFER to CONFIRMED, WITHDRAWN, or REBID. Guide 4.10 specifies that the time limit to confirm an accepted request is governed by Table 4–2, and that the time is measured from the first time the request is ACCEPTED or COUNTEROFFERED. The exact language of Guide 4.10, as proposed in the UBP NOPR, is as follows:

Guide 4.10: From ACCEPTED or COUNTEROFFER, a Customer may change the status to CONFIRMED, WITHDRAWN, or REBID. The Customer has the amount of time designated as ''Customer Confirmation Time Limit'' in Table 4–2 ''Reservation Timing Requirements'' to change the state of the request to CONFIRMED. The Customer time limit is measured from the first time the request is moved to ACCEPTED or COUNTEROFFER, and is not reset with subsequent iterations of negotiation.

Comments

VEPCO argues that proposed Guide 4.10, which allows a customer to change the status of a request from ACCEPTED to REBID, is inconsistent with the S&CP Document and proposes that the guide be modified so as not to permit this change of status. With this modification, VEPCO would make Guide 4.10 a standard.

Discussion

We agree with VEPCO that the State Diagram in the S&CP Document does not permit a customer to change a request from the ACCEPTED state to REBID. We will revise proposed Guide 4.10 to remove any confusion on this point. In addition, as discussed in section II.D.1, above, we will make this guide a standard. With these changes, we will adopt Standard 4.10 as follows:

Standard 4.10: From ACCEPTED or COUNTEROFFER, a Customer may change the status to CONFIRMED or WITHDRAWN. In addition, a Customer may change the status from COUNTEROFFER to REBID. The Customer has the amount of time designated as ''Customer Confirmation Time Limit'' in Table 4–2 ''Reservation Timing Requirements'' to change the state of the request to CONFIRMED. The Customer time limit is measured from the first time the request is moved to ACCEPTED or COUNTEROFFER, and is not reset with subsequent iterations of negotiation.

Standard 4.11—Moving Request to Retracted State

Guide 4.11, as proposed in the UBP NOPR, provides that a transmission provider may change the state of a request to RETRACTED after the expiration of a customer's confirmation time limit. The exact language of this proposed guide is as follows:

Guide 4.11: After expiration of the ''Customer Confirmation Time Limit,'' specified in Table 4–2 ''Reservation Timing Requirements'', the Provider has a right to move the request to the RETRACTED state.

Comments

VEPCO filed the only comment on this issue. VEPCO recommends that this guide be made a standard.

Discussion

Given the absence of any opposing comments, we will adopt this provision, as proposed in the UBP NOPR. As discussed in section II.D.1, above, we will adopt this guide as a standard (Standard 4.11).

Standard 4.12—Responses to Counteroffers

Guide 4.12, as proposed in the UBP NOPR, permits a transmission provider to change the state of a customer's request from REBID to DECLINED, ACCEPTED, or COUNTEROFFER. The guide specifies that the time limit to make the change is governed by Table 4–2, and that the response time is measured from the customer's most recent REBID. The exact language of this proposed guide is as follows:

Guide 4.12: Should the Customer elect to respond to a Provider's COUNTEROFFER by moving a reservation request to REBID, the Provider shall respond by taking the request to a DECLINED, ACCEPTED, or COUNTEROFFER state within the ''Provider Counter Time Limit,'' specified in Table 4–2 ''Reservation Timing Requirements''. The Provider response time is measured from the most recent REBID time.

Comments

VEPCO, the sole commenter addressing this issue, recommends that we adopt Guide 4.12 as a standard, provided that we also adopt its recommended revisions to Guide 4.13.

Discussion

Given the absence of any opposing comments, we will adopt this provision, as proposed in the UBP NOPR. As discussed in section II.D.1, above, we will adopt this guide as a standard (Standard 4.12).[89]

Standards 4.6 and 4.13—Reservation Timing Requirements

Guide 4.6 provides that, consistent with filed tariffs, transmission providers/sellers shall respond to customer requests within the time limits appearing in Table 4–2, which is contained in proposed Guide 4.13.

the first instance. As always, however, minority views expressed before industry working groups can be reasserted in comments to the Commission, without prejudice.

[88] VEPCO Comments at 6.

[89] In the next section, among other matters, we address VEPCO's request for modifications to proposed Guide 4.13. In our view, VEPCO's suggested revisions to proposed Guide 4.13 offer no reason not to adopt proposed guide 4.12 as a standard.

Proposed Table 4–2 specifies how long transmission providers may take to respond to a request for service and how long customers may take to confirm the transmission provider's acceptance. Guide 4.6, as proposed in the UBP NOPR, provides as follows:

Guide 4.6: A Transmission Provider/Seller shall respond to a Customer's service request, consistent with filed tariffs, within the ''Provider Response Time Limit'' defined in Table 4–2 ''Reservation Timing Requirements.'' The time limit is measured from the time the request is QUEUED. A Provider may respond by setting the state of the reservation request to one of the following:

- INVALID
- DECLINED
- REFUSED
- COUNTEROFFER
- ACCEPTED
- STUDY (when the tariff allows), leading to REFUSED, COUNTEROFFER, or ACCEPTED [90]

For each class of service, Guide 4.13, as proposed in the UBP NOPR, specifies the allowed time limit for: (1) A transmission provider to respond to a reservation request; (2) a customer to confirm the request; and (3) a transmission provider to respond to a customer's rebid. The exact language of this proposed guide is as follows:

Guide 4.13: The following timing requirements should apply to all reservation requests:

TABLE 4–2.—RESERVATION TIMING GUIDELINES

Class	Service increment	Time QUEUED prior to start	Provider evaluation time limit [1]	Customer confirmation time limit after ACCEPTED or COUNTEROFFER [2]	Provider counter time limit after REBID [3]
Non-Firm	Hourly	<1 hour	Best effort	5 minutes	5 minutes.
Non-Firm	Hourly	>1 hour	30 minutes	5 minutes	5 minutes.
Non-Firm	Daily	N/A	30 minutes	2 hours	10 minutes.
Non-Firm	Weekly	N/A	4 hours	24 hours	4 hours.
Non-Firm	Monthly	N/A	2 days	24 hours	4 hours.
Firm	Daily	<24 hours	Best effort	2 hours	30 minutes.
Firm	Daily	N/A	30 days [4]	24 hours	4 hours.
Firm	Weekly	N/A	30 days [4]	48 hours	4 hours.
Firm	Monthly	N/A	30 days [4]	4 days	4 hours.
Firm	Yearly	N/A	30 days	15 days	4 hours.

Notes for Table 4–2:
1. Consistent with regulations and filed tariffs, measurement starts at the time the request is QUEUED.
2. Measurement starts at the time the request is first moved to either ACCEPTED or COUNTEROFFER. The time limit does not reset on subsequent changes of state.
3. Measurement starts at the time the Transmission Customer changes the state to REBID. The measurement resets each time the request is changed to REBID.
4. Subject to expedited time requirements of Section 17.1 of the *pro forma* tariff. Transmission Providers should make best efforts to respond within 72 hours, or prior to the scheduling deadline, whichever is earlier, to a request for Daily Firm Service received during period 2–30 days ahead of the service start time.

Comments

The commenters on Table 4–2 (Guide 4.13) raise a number of issues. For clarity, we will address these issues separately.

1. Time Limits for Requests for Next-Day Non-Firm Hourly Transmission Service

MIC requests that we add a new line to Table 4–2 for non-firm hourly service requested the day before the reservation is to start. It proposes a 30 minute customer confirmation time and a 10 minute transmission provider counter time. MIC asserts that when a service request is made well in advance of the start time, customers can be given more time to confirm and transmission providers can be given more time to respond to a REBID. Cinergy agrees with the MIC's proposal.

Discussion

We agree with the MIC that for non-firm hourly service, when the service is requested on the day previous to the start of the service, the customer confirmation time limit and provider time limit to counter a REBID should be increased. We will make the requested change to Table 4–2, adding new time limits for day-before requests for non-firm hourly service (with 30 minutes for customer confirmations and 10 minutes for provider counteroffers).

2. Calendar Days v. Business Days

Duke argues that the time limits in Table 4–2 that are specified in terms of days could be interpreted as either business days or calendar days. Duke claims that the distinction is important when customers try to arrange for transmission across multiple transmission providers and recommends that calendar days be used. [91]

Discussion

We agree with Duke that the term ''days'' in Table 4–2 needs to be more clearly defined. If transmission providers are free to define the time limits as either calendar days or business days, customers will have a difficult time arranging for transmission across multiple transmission systems. As Duke suggested, we will add a footnote to Table 4–2 defining ''days'' as ''calendar days.''

3. Other Suggestions for Revised Time Limits

AEP asserts that the confirmation periods in Table 4–2 may be too long under certain circumstances. For example, in cases in which transmission providers have numerous competing transactions to sort out and customers have the right-of-first-refusal, then the confirmation time for weekly firm service should be shorter than the proposed 48 hours. AEP requests that transmission providers be allowed to require shorter confirmation periods when these problems occur. [92]

BPA opposes adopting the proposed reservation timing guidelines and instead proposes setting reservation timing deadlines based on the timing of the request in relation to the initial delivery day. [93] BPA asserts that the proposed guidelines, which are based on duration of service, will permit customers to strategically request

[90] UBP NOPR at 33,627.

[91] Duke Commets at 6.

[92] AEP Comments at 5.

[93] BPA Comments at 3–4.

transmission service and allow the confirmation window to expire in order to gain an advantage. Thus, if a customer requests service close to the time of power flow and does not confirm the deal, it leaves its competitors without the ability to reserve firm service.

In the alternative, BPA argues that, if we do not adopt its suggested revisions to Table 4–2, we should allow

> any unconfirmed firm transmission request in the queue to be displaced by either (1) a preconfirmed firm transmission request of equal or greater duration, or (2) a request which is lower in the queue but which is confirmed before the unconfirmed request. [94]

Consumers argues that the confirmation timing limits in Table 4–2 need to be revised. [95] Consumers argues that a marketer trying to put a deal together would be squeezed whenever multiple transmission providers are involved and one transmission provider replies immediately and another transmission provider takes a long time to evaluate a request. It asserts that, in these instances, the confirmation response time for the first reservation request could expire before the second transmission provider responds to the evaluation request. Consumers asks that this business problem be resolved.

Duke recommends that the customer confirmation time limit for non-firm hourly requests, submitted when service is to commence less than one hour from the time of the request, be extended from 5 minutes to 15 minutes. Duke asserts that the 5 minute time limit is too restrictive on customers when the next hour market is very active.[96] Duke also recommends that the confirmation time limit for non-firm hourly requests, submitted when service is to commence more than one hour from the time of the request, be extended from 5 minutes to 30 minutes.[97]

VEPCO recommends changing the customer confirmation time for non-firm hourly service from 5 minutes to one hour and changing the transmission provider counter time limit for non-firm hourly service from 5 minutes to 15 minutes.[98] VEPCO argues that the customer confirmation time must be significantly longer than the transmission provider counter time since the customer's confirmation time never resets and the transmission provider's counter time resets every time the request status is set to REBID. VEPCO argues that if the customer and transmission provider time limits are the same, then negotiations on OASIS will not be practical, since the confirmation time could expire before the transmission provider is required to respond to the first REBID. VEPCO claims that a negotiation process takes time and is impractical when a request is made within four hours of the start of service.

Discussion

The Reservation Timing Requirements in Table 4–2, as proposed in the UBP NOPR, represent a balancing of the needs of all parties to OASIS transactions to have sufficient time to consider and respond to circumstances presented. All OASIS transaction participants are being asked to make responses on a fairly expedited basis, so that time remains for other market participants to make similar judgments. As to the various proposals to revise these reservation timing requirements, while we are not persuaded to adopt any of these proposals at this time, we are willing to reexamine this issue if problems arise in transacting business over the OASIS using the reservation timing requirements adopted in this final rule.

4. Table 4–2, Scheduling Deadlines, and Preemption Deadlines

VEPCO argues that the Customer Confirmation Time Limits in Table 4–2 should not be interpreted as extending a scheduling deadline or overriding a preemption deadline, and that a note clarifying this be added to Table 4–2.[99] Likewise, Allegheny Power agrees with the need for predetermined reservation time deadlines for OASIS transactions, but seeks clarification that customer confirmation time limits do not provide for an extension of any reservation or scheduling deadlines contained in a transmission provider's Open Access Tariff.[100]

Discussion

We agree with Allegheny Power and VEPCO that the Customer Confirmation Time Limits in Table 4–2 should not be interpreted as extending a scheduling deadline or overriding a preemption deadline. Accordingly, we will add an explanatory note to Table 4–2 that makes this clear.

5. Time Limits for Requests for Yearly Service

VEPCO argues that the ''Time QUEUED Prior to Start'' in Table 4–2 for yearly firm service should be changed from ''N/A'' to ''greater than or equal to 60 days'' in order to make it consistent with section 17.1 of the *pro forma* tariff.

Discussion

VEPCO is correct that the *pro forma* tariff states that requests for firm point-to-point service for periods of one year or longer must be made at least 60 days in advance of the calendar month in which the service is to commence. However, the tariff also states that requests made less than 60 days in advance should be considered where feasible. We will therefore revise ''Time QUEUED Prior to Start'' in Table 4–2 for yearly firm service, from ''N/A'' to ''greater than or equal to 60 days'' and add the following footnote:

> Subject to Section 17.1 of the *pro forma* tariff, whenever feasible and on a non-discriminatory basis, transmission providers should accommodate requests made with less than 60 days notice.

6. Requests Superseded Before Confirmation

VEPCO recommends that note 2 to Table 4–2 be modified to explain that ''for competitive nonfirm requests for a limited resource, a request could be [SUPERSEDED] prior to customer confirmation thereby terminating the Confirmation Time Limit.'' [101]

Discussion

We do not see the need for the footnote suggested by VEPCO. The State Diagram permits a reservation request to be superseded before it is confirmed. The definition of SUPERSEDED in section 4.2.10.2 of the S&CP Document indicates that SUPERSEDED is a final state. As such, the change of status to SUPERSEDED terminates the confirmation rights of the requester.

7. Adoption as Mandatory Standard

Cinergy argues that there is a need for further study of the timing requirements and related guides before the Commission defines the transactional process in standards.[102] By contrast, ECI proposes that this guide be made a standard. It argues that if every transmission provider is permitted to have different timing requirements and priorities for requests that the resulting

[94] BPA Comments at 5.

[95] Consumers Comments at 2.

[96] Duke Comments at 6.

[97] NERC Comments at 7. *See also* Cinergy Comments at 10, Duke Comments at 6.

[98] VEPCO also recommends that, if the Commission changes the non-firm hourly transmission provider counter time limit to 15 minutes, it also should change the transmission provider counter time limit for non-firm daily transmission from 10 minutes to 15 minutes, in order to keep non-firm daily limit at least as long as the non-firm hourly time limit.

[99] VEPCO Comments at 12.

[100] Allegheny Power Comments at 3.

[101] VEPCO Comments at 8.

[102] Cinergy Comments at 9–10.

discrepancies in the rules would make it very difficult for market participants to move power across different transmission systems.[103] We have carefully considered the opposing views on this issue and conclude that Guides 4.6 and 4.13 should be adopted as standards. In our June 18 Order, we recognized the need for parties to negotiations to be able to make decisions quickly and in a known time frame and we requested that the CPWG/How Group examine the development of predetermined deadlines for acceptances by transmission providers of transmission service requests and confirmation by customers of acceptances of their requests. The time limits proposed in the UBP NOPR, based on the recommendations of the CPWG/How Group in the June 19 Report, accomplish this. Notwithstanding arguments to the contrary, we remain convinced that the need for uniform time limits outweighs arguments that these decisions be left to the discretion of individual transmission providers. We remain persuaded that allowing individual transmission providers to set their own time limits for themselves and their customers would inhibit the movement of power. We will, therefore, adopt Guides 4.6 and 4.13 [104] as Standards 4.6 and 4.13, with the revisions discussed above.

d. Negotiations with Competing Bids for Constrained Resources (When Customer Has Not Yet Confirmed a Transmission Provider's Acceptance) (Standards 4.14—4.27)

Standard 4.14—Service Request Priority Tiers

As we stated in the UBP NOPR, Guide 4.14 divides transmission service into five tiers of successive priority when competing bids are negotiating for transmission service.[105] Highest priority is given to native load, network, or long-term firm service (subsection 4.4.1). Second highest priority is given to short-term firm service (subsection 4.4.2). Third highest priority is given to network service from non-designated resources (subsection 4.4.3). Fourth highest priority is given to non-firm service (subsection 4.4.4). Fifth highest priority is given to non-firm point-to-point service over secondary receipt and delivery points (subsection 4.4.5).[106] The exact language of this proposed guide is as follows:

Guide 4.14: Consistent with regulations and filed tariffs, the following are recommended relative priorities of Service Request Tiers.* Specific exceptions may exist in accordance with filed tariffs. The priorities refer only to negotiation of service and do not refer to curtailment priority.

4.4.1.Service Request Tier 1: Native load, Network, or Long-term Firm
4.4.2. Service Request Tier 2: Short-term Firm
4.4.3. Service Request Tier 3: Network on Non-designated Resources
4.4.4. Service Request Tier 4: Non-firm
4.4.5. Service Request Tier 5: Service over secondary receipt and delivery points

Note: The term ''Tier'' is introduced to avoid confusion with existing terms such as ''TS—CLASS.'' [107]

Comments

The only comment received concerning Guide 4.14 was from VEPCO who agrees with our proposal to adopt this guide.[108]

Discussion

Given the absence of any opposing comments, we will adopt these provisions, as proposed in the UBP NOPR, with the following exceptions. First, for clarity, we will revise ''Network on Non-designated Resources'' to read ''Network Service From Non-designated Resources'' in the reference to Service Request Tier 3 (4.4.3) in Guide 4.14. Second, we will revise the references to Service Request Tier 5 (4.4.5) in Guide 4.14 and in Table 4–3, Row 9, to clarify that Tier 5 service involves non-firm point-to-point service over secondary receipt and delivery points. Also, as discussed in section II.D.1, above, we will adopt these proposed guides as Standards 4.14 and 4.4.1–4.4.5.[109]

Standard 4.15—First-Come-First-Served

Guide 4.15 provides that, consistent with regulations and filed tariffs, recommended reservation requests should be handled on a first-come-first-served basis based on queue time.[110] The exact language of this proposed guide is as follows:

Guide 4.15: Consistent with regulations and filed tariffs, reservation requests should be handled in a first-come-first-served order based on QUEUE TIME.

Comments

VEPCO filed the sole comment concerning proposed Guide 4.15. VEPCO supports the proposal in the UBP NOPR to adopt this guide.

Discussion

Given the absence of any opposing comments, we will adopt this provision, as proposed in the UBP NOPR. As discussed in section II.D.1, above, we will adopt this proposed guide as Standard 4.15.

Standard 4.16—Priorities for Competing Reservation Requests

As we stated in the UBP NOPR, recommended Guide 4.16, which includes Table 4–3, describes the relative priorities of competing service requests and rules for offering a right-of-first-refusal, consistent with Commission regulations and filed tariffs.[111] The exact language of this proposed guide is as follows:

Guide 4.16: Consistent with regulations and filed tariffs, Table 4–3 describes the relative priorities of competing service requests and rules for offering right-of-first-refusal. While the table indicates the relative priorities of two competing requests, it also is intended to be applied in the more general case of more than two competing requests.

As we stated in the UBP NOPR, Guide 4.16 would allocate requests for Tier 1 services (native load, network, long-term firm) and Tier 2 services (short-term firm) on a first-come-first-served basis.[112] A request for Tier 1 service could not be preempted. A request for Tier 2 service that is ''conditional'' could be preempted by a request for Tier 1 service without any right-of-first-refusal.[113] A request for Tier 2 service

[103] ECI Comments at 2.

[104] Guide 4.6 is further discussed earlier in this section.

[105] These priorities are not meant to govern curtailments.

[106] UBP NOPR at 33,632–33.

[107] UBP NOPR at 33,655 & n.136.

[108] VEPCO Comments at 8.

[109] As discussed above, we have asked the MIC/How Groups to report to us on whether an additional provision is needed here covering NHM Service.

[110] UBP NOPR at 33,631.

[111] UBP NOPR at 33,631–33.

[112] UBP NOPR at 33,633.

[113] In the UBP NOPR at 33,633 n.96, we explained that the distinction between conditional and unconditional service, as related to firm point-to-point service, is discussed in Order No. 888, FERC Stats. & Regs. ¶ 31,036 at 31,746, where we stated:

Accordingly, the Final Rule pro forma tariff provides a mechanism to address this concern while safeguarding the rights of potential customers to obtain access to unused capacity. The tariff provides that reservations for short-term firm point-to-point service (less than one year) will be conditional until one day before the commencement of daily service, one week before the commencement of weekly service, and one month before the commencement of monthly service. These conditional reservations may be displaced by competing requests for longer-term firm point-to-point service. For example, a reservation for daily firm point-to-point service could be displaced by a request for weekly firm point-to-point service during an overlapping period. Before the applicable reservation deadline, a holder of a conditional firm point-to-point reservation would have the right of first refusal to match any longer-term firm point-to-point reservation before being displaced. After the deadline, the reservation becomes unconditional, and the service would be

that is ''conditional'' could also be preempted by a request for longer term Tier 2 service but, under this circumstance, it would receive the right-of-first-refusal.[114]

Tier 3 service (network service from non-designated resources) could be preempted by requests for either Tier 1 or Tier 2 service and would not receive the right-of-first-refusal. Tier 4 service (all non-firm point-to-point) could be preempted by request for Tier 1, 2, or 3 service and would not receive the right-of-first-refusal. A Tier 4 request could be preempted (except in the hour before service begins) by a longer duration tier 4 service and would receive the right-of-first-refusal. Until a Tier 4 request is confirmed, it could be preempted (except in the hour before service begins) by a preconfirmed Tier 4 request of equal duration and higher price. The request would not receive the right-of-first-refusal. The exact language of Table 4–3, as proposed in the UBP NOPR, is as follows:[115]

TABLE 4–3.[116]—PRIORITIES FOR COMPETING RESERVATION REQUESTS

Row	Request 1	Is preempted by Request 2	Right of first refusal
1	Tier 1: Long-term Firm, Native Load, and Network Firm.	N/A—Not preempted by a subsequent request.	N/A.
2	Tier 2: Short-term Firm	Tier 1: Long-term Firm, Native Load, and Network Firm), while Request 1 is conditional. Once Request 1 is unconditional, it may not be preempted.	No.
3	Tier 2: Short-term Firm	Tier 2: Short-term Firm of longer term (duration), while Request 1 is conditional. Once Request 1 is unconditional, it may not be preempted.[1]	Yes, while Request 1 is conditional. Once Request 1 is unconditional, it may not be preempted and right of first refusal is not applicable.
4	Tier 3: Network Service From Non-Designated Resources.	Tiers 1 and 2: All Firm (including Network)	No.
5	Tier 4: All Non-Firm PTP	Tiers 1 and 2: All Firm (including Network)	No.
6	Tier 4: All Non-Firm PTP	Tier 3: Network Service from Non-Designated Resources.	No.
7	Tier 4: All Non-Firm PTP	Tier 4: Non-firm PTP of a longer term (duration).[1] Except in the last hour prior to start (see Standard 4.23).	Yes.
8	Tier 4: All Non-Firm PTP	Tier 4: Non-firm PTP of equal term (duration)[1] and higher price, when Request 1 is still unconfirmed and Request 2 is received pre-confirmed. A confirmed non-firm PTP may not be preempted for another non-firm request of equal duration. (See Standard 4.22 and Guide 4.25.).	No.
9	Tier 5: PTP Service over secondary receipt and delivery points.	Tier 5 can be preempted by Tiers 1 through 4.	No.

[1] Longer duration, in addition to being higher SERVICE INCREMENT (*i.e.*, WEEKLY has priority over DAILY), also may mean more multiples of the same SERVICE INCREMENT (*i.e.*, 3 Days may have priority over 2 Days).

Comments

The commenters on Table 4–3 and Guide 4.16 raise a number of unrelated issues. For clarity, we will address these issues separately.

1. Multiples of Service Increments

Duke argues that Footnote 1 of Table 4–3 should be revised so that requests for Multiples of the same SERVICE INCREMENTS would not be given priority during the reservation process.[117] VEPCO argues that giving higher priority to multiple service increments allows participants to ''game'' the preemption process. For example, a customer who requests 2 days of daily service at 100 MW per day could be preempted by another customer requesting 2 days of daily service at 100 MW per day and 1 day at 1 MW.

Discussion

As we stated in the UBP NOPR, recommended Guide 4.16 defines the priorities of longer duration for non-firm point-to-point service to include both a higher service increment (weekly service has priority over daily service) and multiples of the same service increment (three day service has priority over two day service).[118] We also found these priorities to be consistent with section 14.2 of the *pro forma* tariff.[119] Nothing in Duke and VEPCO's arguments persuades us otherwise. Thus, we deny Duke's request to revise footnote 1 to Table 4–3. Three day service is of a longer duration than one day service and in our view deserves a higher priority because this encourages greater use of the transmission system.

As to VEPCO's concern that granting priority to multiple service increments could lead to gaming by customers who increase their service increments with small amounts of capacity (adding a third and fourth day at 1 MW to a 100 MW request) we do not interpret footnote 1 to Table 4–3 to allow this. Nevertheless, to remove any uncertainty, we will revise note 1 of Table 4–3 to clarify that multiple service

entitled to the same priorities as any long-term point-to-point or network firm service.

Conditional reservations also are discussed in Madison Gas & Electric Company v. Wisconsin Power & Light Company, 80 FERC ¶ 61,331 at 62,102–03 (1997), *reh'g denied*, 82 FERC ¶ 61,099 at 61,372–73 (1998).

[114] The rights-of-first-refusal shown in Table 4–3 should not be confused with the right-of-first-refusal available to a customer with a pre-existing expiring contract under Order No. 888, *see* FERC Stats. & Regs. ¶ 31,036 at 31,745.

[115] As mentioned above, we have requested that the MIC/How Groups review whether this table needs revision in light of the Next Hour Order.

[116] For clarity, we have identified the rows in Table 4–3.

[117] Duke Comments at 7.

[118] UBP NOPR at 33,634.

[119] *Id.*

increments must be at the same level of capacity. Requests for lesser amounts of capacity should be made in a separate unrelated request for transmission service.

2. ''Preemption'' of Unconfirmed Requests for Non-Firm Point-to-Point Transmission Service

VEPCO argues that a footnote should be added to Row 7 of Table 4–3 stating that a request that is preempted before it is confirmed does not have right-of-first-refusal.[120] VEPCO also requests clarification that as long as a Transmission Provider's methodology for treating preemption and the right-of-first-refusal meets the intent of, or is superior to, the pro forma tariff, and is applied in a non-discriminatory manner, then the transmission provider will be in compliance with this proposed standard. [121]

Discussion

Row 7 of Table 4–3 governs the priorities for competing reservation requests for non-firm point-to-point transmission service. It provides that a request may be preempted by a subsequent request of a longer term (duration). Where applicable, requests may be superseded before being confirmed, and may still be preempted after confirmation. As to whether superseded requests obtain a right-of-first-refusal, this question was already addressed in the UBP NOPR, where we stated:

> Table 4–1's definition of SUPERSEDED is silent as to why and when an unconfirmed request might be preempted. It neither confers nor denies a customer's right to match. When a request for transmission service has been superseded, this occurs before the customer's confirmation. Therefore, the customer has no right to match.[[122]]

Nonetheless, to remove any uncertainty, we will add the requested footnote to Row 7 of Table 4–2 clarifying that the reference in Row 7 of Table 4–3 to a right-of-first-refusal applies only to confirmed requests. As shown in the quoted language above, this is consistent with our findings on this subject in the UBP NOPR.

As to VEPCO's request for clarification, we disagree with VEPCO's suggested approach. All transmission providers must implement preemption and the right-of-first-refusal in the same manner. This is not an area where transmission providers are free to devise their own unique procedures.

3. Right-of-First-Refusal to Match a Preconfirmed Tier 4 Request of Equal Duration and Higher Price

VEPCO asserts that Row 8 of Table 4–3 is in conflict with proposed Guide 4.26. Specifically, VEPCO argues that Row 8 implies that a transmission provider need not COUNTEROFFER the price of a subsequent request of equal term and higher price if the first request is still unconfirmed. VEPCO recommends that Row 8 be eliminated for the reasons stated in its comments on proposed Guide 4.26, below.

Discussion

VEPCO is correct that Row 8 of Table 4–3 conflicts with Guide 4.26. Table 4–3 provides, without qualification, that an unconfirmed request for non-firm point-to-point service preempted by a preconfirmed Tier 4 request of equal duration and higher price is not entitled to right-of-first-refusal.[123] However, Guide 4.26 would permit a transmission provider to offer the right-of-first-refusal in this instance. We will correct this discrepancy by amending Row 8 of Table 4–3 to give a right-of-first-refusal.

4. Adoption as Mandatory Standard

Comments

ECI argues that, at a minimum, Guide 4.13 (Table 4–2) specifying the reservation timing requirements and Guide 4.16 (Table 4–3), which specifies the priorities for competing reservation requests, must be reclassified as standards.

> If each transmission provider is granted different timing requirements and different priorities, it will be very difficult to keep up with the smorgasbord of business rules when trading power among different transmission providers. The resulting discrepancies in the rules would make it very difficult for market participants to synchronize transmission across the different grids.[124]

Discussion

We agree with ECI that, of all the Uniform Business Practices, the one where uniformity among transmission providers is most urgently needed, is in assigning priorities for competing reservation requests. We agree with ECI that the current ''smorgasbord'' of practices among transmission providers makes it difficult for customers to move power across the grid and inhibits the development of markets. If the priorities are left voluntary, this will remain the case. Accordingly, as discussed in section II.D.1, above, we will adopt proposed Guide 4.16 as Standard 4.16.

Standard 4.17—Required Posting When a Reservation Request Is Preempted

Guide 4.17, as proposed in the UBP NOPR, provides that when a reservation request is preempted, the transmission provider must post the assignment reference number of the reservation that preempts the reservation request.[125] The exact language of this provision is as follows:

> Guide 4.17: For a reservation request that is preempted, the Transmission Provider should indicate the Assignment Reference Number of the reservation that preempted the reservation request.

Comments

Duke recommends that the assignment reference number of the preempting request be placed in the Seller Comment field of the preempted request. VEPCO would post the assignment reference number in the STATUS COMMENTS field of the preempted request.

Discussion

Guide 4.17 provides that transmission providers indicate the Assignment Reference Number of the reservation that preempted the reservation. However, the Guide does not specify where the number should appear in the TRANSSTATUS template. This information should be posted in a uniform location within the TRANSSTATUS template so that OASIS users will know where to find it. Thus, we will require that the Assignment Reference Number of the preempting request be placed in the Seller Comment field of the preempted request.

In addition, as discussed in section II.D.1, above, we will adopt this guide as a standard. We therefore will adopt Standard 4.17 that provides as follows:

> Standard 4.17: For a reservation request that is preempted, the Transmission Provider must indicate the Assignment Reference Number of the reservation that preempted the reservation request in the Seller Comment field of the preempted request.

Standard 4.18—Displaced and Superseded Pending Requests for Transmission Service

As we stated in the UBP NOPR, Guide 4.18 lays out the circumstances when a transmission provider may displace or supersede pending requests for service based on the priorities laid out in Table 4–3 (Guide 4.16).[126] The exact language of this provision is as follows:

[120] VEPCO Comment at 8.

[121] Because we are addressing preemption, we will address VEPCO's comment here, even though it was raised as an aside to its support for Standard 4.21.

[122] UBP NOPR at 33,626, notes omitted.

[123] *See* UBP NOPR, Row 8, Column 3 of Table 4–3, which states ''no'' to whether a right-of-first-refusal is provided.

[124] ECI Comments at 2.

[125] UBP NOPR at 33,634.

[126] UBP NOPR at 33,632.

Guide 4.18: Given competing requests for a limited resource and a right-of-first-refusal is not required to be offered, the Provider may immediately move requests in the CONFIRMED state to DISPLACED, or from an ACCEPTED or COUNTEROFFER state to SUPERSEDED, if the competing request is of higher priority, based on the rules represented in Table 4–3. These state changes require dynamic notification to the Customer if the Customer has requested dynamic notification on OASIS.

In the UBP NOPR, we clarified that a transmission provider may change a confirmed reservation from the CONFIRMED status to DISPLACED status, at the time a competing request of higher priority is confirmed.[127]

In addition, the UBP NOPR proposed that transmission providers decrement ATC on their internal systems upon accepting a request (without waiting for a customer's confirmation). At the same time, we invited specific comment on whether ATC should be decremented upon acceptance of a customer's request or upon the customer's confirmation of the acceptance. We also proposed that ATC postings be updated when the transmission service is reserved (after confirmation).[128]

We also proposed to clarify the definition of ''DISPLACED'' by inserting the words ''if any'' after the word ''refusal'' to make clear that the existence of a status value for ''DISPLACED'' in the S&CP Document is not meant to confer any right-of-first-refusal. In addition, we proposed to substitute the word ''replaced'' for ''displaced'' in the text of the definition.

Comments

PJM and Cinergy agree with our proposal to require that ATC be decremented internally when a reservation is accepted and that ATC postings be decremented when a reservation is confirmed.[129] PJM argues that if ATC is not decremented when a reservation is accepted, a customer could be placed in the position of having its request accepted, creating a deal based on the acceptance, and, when it was ready to confirm, another customer could be awarded the service.

Allegheny Power, Consumers, Duke, TEP, and VEPCO disagree with the proposal and would decrement ATC (both internally and in postings) when the accepted reservation is confirmed by the customer.[130] Allegheny Power cites its experience as the reason for preferring to decrement on confirmation. Recently, Allegheny Power accepted, without confirmation, as many as 50 reservations on a given path.[131] Allegheny Power claims that decrementing ATC for each reservation would have artificially limited the east to west transmission market by reducing ATC to zero on many paths. Allegheny Power's ability to sell transmission service would have been limited without a commitment from customers. Allegheny Power argues that by setting confirmation time limits, requests that are not confirmed are removed from the queue. Allegheny Power also argues that the procedure avoids the possibility of a customer purposely locking up all ATC on a path with no intention of confirming the request.[132] Duke adds that, if ATC is internally decremented upon acceptance, a transmission provider may find itself in the position of having decremented ATC and subsequently having the customer withdraw the request.

TEP argues that decrementing ATC when a reservation is confirmed assures a commitment by the customer to pay for the service and allows ATC to be adjusted and posted in a single automated process.[133]

Duke also requests that the Commission clarify its rules on transmission providers' practices with regard to the posting of ATC, to decrement and show capacity benefit margin (CBM) and transmission reserve margin (TRM) on the OASIS, in addition to showing transmission reservations, in order to make clear how transmission providers have arrived at their posted ATC.[134]

In the UBP NOPR, we explained that, unless ATC is updated internally on acceptance, a transmission provider could be placed in the awkward position of having accepted numerous requests for the same constrained capacity and having several customers confirm the deal at the same time. VEPCO argues that the solution to having customers confirm at the same time is for the transmission provider to displace the later requests.[135] VEPCO also argues that ATC should not be decremented until a customer agrees to pay for it.[136]

Consumers' request asks us to clarify the goal of maintaining separate posted and non-posted ATC values, and how transmission providers will use non-posted ATC.[137] Consumers' point seems to be that there is no value in a transmission provider maintaining non-posted ATC values.

Discussion

In the UBP NOPR,[138] we proposed to revise the definition of ''displaced'' in the Data Element Dictionary and in section 4.2.10.2 of the S&CP Document. In addition, as discussed in section II.D.4.b, above, we will correct the definition of ''displaced'' to add the word ''not'' that was erroneously omitted. With these changes, the definition of ''displaced'' in section 4.2.10.2 of the S&CP Document will now read as follows:

DISPLACED = assigned by Provider or Seller when a ''CONFIRMED'' reservation from a Customer is replaced by a longer term reservation and the Customer has not exercised right of first refusal, if any (*i.e.*, refused to match terms of new request). (Final state).

We continue to believe that it is preferable for transmission providers to decrement ATC internally as reservations are accepted and to decrement ATC postings as reservations are confirmed. VEPCO suggests that rather than decrement ATC internally when reservations are made, transmission providers should displace customers at the end of the queue when confirmations are made. We believe that VEPCO's suggestion unfairly penalizes customers who have made deals based on acceptance of their reservations and whose unconfirmed reservations are subsequently preempted. If transmission providers decrement ATC internally as requests are made, then customers at the end of the queue will not have their reservations accepted until, and if, space becomes available. Consequently, fewer customers whose requests were accepted will be denied service.

By contrast, VEPCO's suggestion would extend acceptances to customers further down the queue, who could preempt customers who had made their requests earlier, but who had not yet confirmed. This undercuts the customer confirmation time limits agreed on by the industry and that we are adopting in Table 4–2, and is not a desired outcome. In addition, VEPCO's comments here are contradicted by its comments supporting proposed Guide 4.7 and 4.25, where VEPCO asserted that all pending requests should be evaluated at the same time, prior to acceptance, and that subsequent requests at a higher

[127] UBP NOPR at 33,634.

[128] The transmission provider adjusts its calculation of ATC internally before it is required to post a revised ATC on the OASIS.

[129] PJM Comments at 5, Cinergy Comments at 10.

[130] Duke also raises this argument in connection with pre-confirmation under proposed Guide 4.25. We will address Duke's comment there.

[131] Allegheny Power Comments at 3.

[132] Allegheny Power Comments at 3–4.

[133] TEP Comments at 4.

[134] Duke Comments at 9.

[135] VEPCO Comments at 10.

[136] *But see* discussion of VEPCO's comments (re: proposed Guide 4.7) in section II.D.4.c above and later in this section (re: proposed Guide 4.25).

[137] Consumers Comments at 3.

[138] This proposal was unopposed.

price are not to be evaluated until expiration of the customer's confirmation time limits.

Regarding Consumers' requests for clarification of what we expect to achieve by having transmission providers maintain an internal ATC value and a posted ATC value, keeping track internally of how much ATC has been reserved allows transmission providers to know when reservations reach the capacity limit of a path. This offers the benefit of allowing transmission providers to cease accepting reservations until capacity becomes available (either through the withdrawal of a pending request or the expiration of a confirmation time limit).

The foregoing discussion of Consumers' request for clarification explains why the Commission finds merit in having a transmission provider internally decrement ATC at the time it accepts a customer's request. This discussion should not be interpreted as revising the requirements for updating ATC postings established in Order No. 889,[139] which requires that, ''A [ATC and TTC] posting for a constrained path must be updated when transmission service on the path is reserved or service ends or when the path's TTC changes by more than 10 percent,'' and ''[p]ostings for an unconstrained posted path must be updated when the ATC changes by more than 20 percent of the path's TTC.''

As to Duke's suggestion that transmission providers decrement and show CBM and TRM on the OASIS, we note that, on January 31, 2000, the MIC and How Group jointly filed recommended revisions to the S&CP Document that, among other matters, propose a method for posting CBM and TRM on the OASIS.[140] We will address Duke's suggestion within the context of our review of the recommended revisions to the S&CP Document. As discussed in section II.D.1, above, we will adopt this guide as Standard 4.18.

Standard 4.19—Counteroffers When Right-of-First-Refusal Is Required

In the UBP NOPR, we stated that Guide 4.19 provides that, in instances where the customer is entitled to a right-of-first-refusal, the transmission provider is to notify the customer through the use of a COUNTEROFFER of the opportunity to match the subsequent offer. The exact language of this proposal is as follows:

Guide 4.19: In those cases where right-of-first-refusal is required to be offered, the Provider shall notify the Customer, through the use of a COUNTEROFFER, of the opportunity to match the subsequent offer.

Comments

VEPCO recommends that Guide 4.19 not be adopted as written. VEPCO asserts that it is not possible to facilitate the exercise of a right-of-first-refusal as envisioned by Guide 4.19. It argues that the State Diagram does not allow the status of a CONFIRMED request to be changed to COUNTEROFFER. VEPCO also argues that even if the diagram permitted the change, the S&CP Document does not permit the customer to modify the term of service of the request after the request is submitted. VEPCO proposes to add a new status, ''preempted with right of first refusal,'' to the diagram. VEPCO states that once a request attains this status, the customer should be permitted to modify the term of service to match the preempting request. VEPCO adds that, as the customer would be able to modify the original request, the original queue time would be preserved.

Discussion

As discussed in section II.D.1, above, we will adopt proposed Guide 4.19 as Standard 4.19. We agree with VEPCO that the State Diagram in the S&CP Document does not permit a COUNTEROFFER to a CONFIRMED reservation. In section II.D.4.b, above (discussing Guide 4.5), we addressed the conflict caused by the definition of REBID, in the S&CP Document, which does not allow rebidding of duration, and Row 7 of Table 4–3, which does allow rebidding of duration. We resolved this conflict by requesting that the MIC/How Group make the necessary changes to the S&CP Document. VEPCO calls our attention to an associated problem: the State Diagram does not have a mechanism for implementing the right-of-first-refusal. VEPCO proposes to add a new STATUS, ''preempted with right of first refusal,'' to the State Diagram. We are reluctant to make this change to the S&CP Document without the MIC and How Group considering the consequences of this change. We, therefore, will adopt Standard 4.19, but request that, within ninety (90) days of the date of publication of this Final Rule in the **Federal Register**, the MIC and How Group propose changes in the State Diagram, templates, and the S&CP Document needed to properly implement this standard.

Standard 4.20—Time Limits for Right-of-First-Refusal

In the UBP NOPR, we proposed Guide 4.20, which provides as follows:

Guide 4.20: A Customer who has been extended a right-of-first-refusal should have a confirmation time limit equal to the lesser of a) the Customer Confirmation Time Limit in Table 4–2 or b) 24 hours.

Comments

Duke claims that the confirmation time limits of Guide 4.20 are too restrictive. It speculates that, in many instances, a significant amount of time will have passed between the confirmation of Request One and the submittal of Request Two. Duke argues that in these circumstances, Request One will need more than 24 hours to decide whether to exercise the right-of-first-refusal if the original confirmation time limits were greater than 24 hours. Duke recommends that the ''or 24 hour'' limit imposed by Guide 4.20 be dropped and that customer Confirmation Time Limits as set forth in Table 4.2 apply to the right-of-first-refusal.[141]

Discussion

Duke's proposal affects the time limits for three services—firm weekly, firm monthly, and firm yearly. As proposed, Guide 4.20 would allow 24 hours to exercise the right-of-first-refusal in all three cases. Duke proposes to change this to 48 hours, 4 days, and 15 days, respectively. In our view, Duke has failed to show that the 24 hour time limit in Guide 4.20 is too restrictive, given that it deals with the second round of the negotiations. We, therefore, will reject Duke's proposal for a longer response time. As discussed in section II.D.1, above, we will adopt this guide as Standard 4.20.

Standard 4.21—Non-discriminatory Rights-of-First-Refusal

As we stated in the UBP NOPR, recommended Standard 4.21 requires transmission providers to apply all rights-of-first-refusal in a non-discriminatory and open manner.[142] The exact language of this provision is as follows:

Standard 4.21: A Transmission Provider shall apply all rights-of-first-refusal in a non-discriminatory and open manner for all Customers.

[139] Order No. 889, FERC Stats. and Regs. ¶ 31,035 at 31,606 (1996).

[140] This was filed in response to the Commission's clarifying order in Capacity Benefit Margin in Computing Available Transmission Capacity, 88 FERC ¶ 61,099 at 61,237 (1999), where the Commission directed that, for each path for which a utility already posts ATC, a transmission provider should also post (and update) the CBM figure for that path, and also should provide a narrative explanation of its CBM practices.

[141] Duke Comments at 8.

[142] UBP NOPR at 33,636–37.

Comments

VEPCO filed the sole comment regarding Standard 4.21. VEPCO raises no objection to the adoption of this standard.[143]

Discussion

Given the absence of any opposing comments, we will adopt this provision, as proposed in the UBP NOPR.

Standards 4.22 & 4.23—When Confirmed Requests May Not Be Displaced

Standards 4.22 and 4.23 discuss when a confirmed reservation for non-firm point-to-point service is protected from being displaced. The exact language of these provisions, as proposed in the UBP NOPR, is as follows:

Standard 4.22: Once a non-firm PTP request has been confirmed, it shall not be displaced by a subsequent non-firm PTP request of equal duration and higher price.

Standard 4.23: A confirmed, non-firm PTP reservation for the next hour shall not be displaced within one hour of the start of the reservation by a subsequent non-firm PTP reservation request of longer duration.

Comments

Southern seeks clarification of three issues regarding Standards 4.22 and 4.23. First, Southern asserts that Standards 4.22 and 4.23 are in conflict with section 14.2 of the *pro forma* tariff and that if Standards 4.22 and 4.23 are adopted, section 14.2 of the *pro forma* tariff must be modified, as proposed by the CPWG/How Group in the June 17 Report.[144] Southern argues that the conflict arises because, under section 14.2 of the *pro forma* tariff, a request for non-firm point-to-point service is to be displaced by a subsequent request for non-firm point-to-point service of equal duration at a higher price. Southern contends that the Commission has four options available to it: (1) Revise section 14.2 the *pro forma* tariff to match Standards 4.22 and 4.23; (2) clarify that Standards 4.22 and 4.23 can be implemented without changes to the *pro forma* tariff; (3) reclassify Standards 4.22 and 4.23 as guides, and instruct utilities who wish to implement them to file revisions to section 14.2 of their individual open access transmission tariffs; or (4) delete the proposed standards.[145]

Second, Southern requests clarification that Standards 4.22 and 4.23 do not affect the requirement in section 14.2 of the *pro forma* tariff that transmission service for network customers from resources other than designated network resources will have a higher priority than any non-firm point-to-point transmission service.

Third, Southern requests clarification that, if a conflict arises between the BPS and the *pro forma* tariff, the *pro forma* tariff controls.

VEPCO offers an interpretation of the interplay between Standard 4.22 and section 14.2 of the *pro forma* tariff that it asks the Commission to confirm. VEPCO reads section 14.2 of the *pro forma* tariff to require that, in the event of limited resources, competing requests for non-firm point-to-point service of equal duration are to be assigned priority based on price. At the same time, VEPCO reads Standard 4.22 to mean that, prior to confirmation, priority will be assigned as provided in section 14.2 of the *pro forma* tariff, while, after confirmation, a request for non-firm point-to-point service will not be displaced by a subsequent request of equal duration and higher price. Given that section 14.2 of the *pro forma* tariff is silent about confirmation, VEPCO argues that, if its understanding of 4.22 and 14.2 is correct, the two provisions are not in conflict, and it agrees with the Commission's proposal to adopt Standard 4.22. Otherwise, VEPCO recommends that Standard 4.22 be revised to reflect that the price prioritization only pertains to competing requests that are not yet CONFIRMED.[146]

Discussion

The June 19 Report recommended a series of revisions to the *pro forma* tariff to avoid potential conflicts with its recommended guides and standards. Two such suggested revisions were meant to prevent any potential conflict with Standards 4.22 and 4.23. To rule out any conflict with recommended Standard 4.22, the How Group recommended that we revise section 14.2 of the *pro forma* tariff to ''prevent displacement of a confirmed non-firm request by a subsequent request of the same duration, but at a higher price.'' [147] To rule out any conflict with recommended Standard 4.23, the How Group recommended that we revise section 14.2 to ''prevent displacement of a confirmed non-firm request by a subsequent longer-term request if the request is made within one hour of the start, for the next hour.'' In the UBP NOPR, we proposed to adopt Standards 4.22 and 4.23 without making any changes to section 14.2 of the *pro forma* tariff. We found that the recommended revisions were not needed because,

In evaluating competing requests for transmission service, we believe that section 14.2 properly directs the transmission provider to give priority to requests for service at a higher price or for a longer duration. However, section 14.2 does not address displacement of an accepted and confirmed request for transmission service upon receipt of a subsequent request for service.[148]

This being the case, we proposed adoption of Standards 4.22 and 4.23, but found it unnecessary to revise section 14.2 of the *pro forma* tariff to accomplish this. VEPCO supports our adoption of Standards 4.22 and 4.23, but asks us to confirm its understanding that, after confirmation, a request for non-firm point-to-point service will not be displaced by a subsequent request of equal duration and higher price. VEPCO's understanding is correct and is explicitly stated in Standard 4.22.

Regarding Southern's request for clarification, we clarify that, in the event of a conflict between the BPS and the *pro forma* tariff, the *pro forma* tariff controls. However, in our view, Standards 4.22 and 4.23 raise no such conflicts. Accordingly, given the absence of any opposing comments, we will adopt Standards 4.22 and 4.23 as proposed in the UBP NOPR.

In addition, as requested by Southern, we also clarify that Standard 4.23 does not affect the requirement in section 14.2 of the *pro forma* tariff that transmission service for network customers from resources other than designated resources will have a higher priority than non-firm point-to-point transmission service.

Standard 4.24—Requests on Unconstrained Paths

In the UBP NOPR, we proposed Guide 4.24, as follows:

Guide 4.24: A Transmission Provider should honor any reservation request submitted for an unconstrained Path if the Customer's bid price is equal to or greater than the Provider's posted offer price at the time the request was queued, even if later requests are submitted at a higher price. This guide applies even when the first request is still unconfirmed, unless the Customer Confirmation Time Limit has expired for the first request.

Comments

VEPCO argues that Guide 4.24 would better track the OASIS Phase 1–A Standard State Definitions in the S&CP Document if the wording were changed to read ''[a] Transmission Provider shall ACCEPT any valid reservation

[143] VEPCO Comments at 12.

[144] For convenience, Attachment B quotes sections 13.2, 14.2, 14.7, and 17.5 of the *pro forma* tariff.

[145] Southern Comments at 3–4.

[146] VEPCO Comments at 12–13.

[147] June 19 Report at A–1 of Appendix A.

[148] UBP NOPR at 33,641.

request * * *.'' VEPCO also suggests that this guide be made a standard because transmission customers should be able to expect that, absent any resource limitations, a valid request will be accepted.[149]

Discussion

We agree with VEPCO and will revise the guide accordingly. In addition, as discussed in section II.D.1, above, we will make this guide a standard. We therefore will adopt Standard 4.24 as follows:

Standard 4.24: A Transmission Provider should accept any reservation request submitted for an unconstrained Path if the Customer's bid price is equal to or greater than the Provider's posted offer price at the time the request was queued, even if later requests are submitted at a higher price. This standard applies even when the first request is still unconfirmed, unless the Customer Confirmation Time Limit has expired for the first request.

Standard 4.25—Pre-Confirmation and Preemption

Section 14.2 of the pro forma tariff provides that, on constrained paths, requests for non-firm point-to-point transmission service of equal duration will be assigned priority based on price. Guide 4.25 (which we here will adopt as Standard 4.25) would implement this concept for transactions on the OASIS by assigning priorities to requests, as follows:

(1) Once a customer makes a request for service, the transmission provider has a time limit to accept or reject the request.[150]

(2) If, during this evaluation period, a second request for the same service and the same duration but at a higher price is received, the transmission provider would reject the first request.

(3) The clock for the transmission provider's accept or reject decision would be reset upon receipt of a higher bid. If no subsequent higher bids are received, the transmission provider would accept the second (higher) request at the end of the time limit.

(4) A customer whose request is accepted has a time limit to confirm the deal.[151] If the customer fails to confirm within this time limit, its request is deemed withdrawn.[152]

(5) Standard 4.25 gives competing customers an additional opportunity to offer a higher price. Until the customer whose request was accepted confirms the deal, other customers may obtain the service by submitting a pre-confirmed offer (for the same duration) at a higher price. As with all standards, transmission providers are required to implement Standard 4.25 in non-discriminatory manner.

Thus, as we stated in the UBP NOPR, proposed Guide 4.25 would permit Tier 4 (non-firm point-to-point) service of equal term with a higher bid price to preempt a request for the same term and lower bid price, as long as the initial lower bid request has not yet been confirmed and the higher bid request is preconfirmed.[153] The exact language of this provision is as follows:

Guide 4.25: Once an offer to provide non-firm PTP transmission service at a given price is extended to a Customer by the Provider, and while this first request is still unconfirmed but within the Customer Confirmation Time Limit, the Provider should not preempt or otherwise alter the status of that first request on receipt of a subsequent request of the same Tier and equal duration at a higher price, unless the subsequent request is submitted as pre-confirmed.

Comments

The comments on this issue raise a number of separate issues. For clarity, we will discuss these issues separately.

1. Duke Suggestion—Multiple Acceptances with Priority Assigned to First Customer to Confirm

Duke argues that a customer making a subsequent request should not be required to preconfirm the request. In other words, Duke's preference is that a transmission provider should be able to accept multiple competing requests, at the same time, and the first customer to confirm an accepted request would be entitled to the transmission service requested,[154] unless subsequently displaced by a higher priority (higher tier) request, regardless of whether that confirmation is made by traditional confirmation or by pre-confirmation.[155]

Discussion

In contrast to Standard 4.25 (proposed as Guide 4.25), which allows a request to be preempted by a subsequent request only if that subsequent request is pre-confirmed, Duke proposes to have the transmission provider accept both requests and award the service to whichever request is confirmed first. Under this approach, notwithstanding the customer confirmation time limits in Table 4–2, customers would be in a race to confirm first in every transaction. Customers in a position to give prompt confirmation would have a tremendous advantage over customers needing to hear from other parties before committing themselves to making a purchase. Under Duke's proposal, a customer who confirms first preempts customers offering the same or even a higher price,[156] because whichever acceptance was confirmed first, would have priority. By contrast, under Standard 4.25, once a customer's request is accepted by the transmission provider, it would only be displaced by a subsequent request that offered a pre-confirmed higher bid. Otherwise, subsequent requests would not be evaluated until the first customer's confirmation time limit had expired.

We believe this proposal constitutes a significant departure from the recommendations of the June 19 Report and what we proposed in the UBP NOPR. As proposed in the UBP NOPR, pre-confirmation would allow a requester making a subsequent request to obtain priority over an unconfirmed request of the same duration by: (1) Offering a higher price; and (2) pre-confirming. This is consistent with the provisions in section 14.2 of the *pro forma* tariff that give priority based on the highest price offered.

Proposed Guide 4.25 is consistent with the *pro forma* tariff and is reasonable because the first customer is protected from being preempted by a bid at the same or a lower price, the transmission provider gets a higher price and a commitment to pay, and the subsequent customer offering the pre-confirmed higher price gets the transmission, even though it was not the first customer to request the service. By contrast, the priorities that would be established under Duke's proposal are not consistent with those established in the *pro forma* tariff.

2. Status of Subsequent Request That Is Not Pre-Confirmed

VEPCO requests clarification of the proposed Guide 4.25. VEPCO maintains that Guide 4.25 is silent as to what would happen if the subsequent request is not pre-confirmed. VEPCO argues that, if the subsequent request is not pre-confirmed, the transmission provider can change the status of the earlier request only after the later request has been confirmed. VEPCO goes on to say that if its interpretation is correct, it has no objection to this guide.[157]

[149] VEPCO Comments at 13.

[150] The time limit is prescribed by the ''Provider Evaluation Time Limit'' in Table 4–2 and varies depending on the length of service requested.

[151] The time limit is prescribed by the ''Customer Confirmation Time Limit after ACCEPTED or COUNTEROFFER'' in Table 4–2 and varies depending on the length of services requrested.

[152] If the transmission provider elects to accept a request immediately, then steps 2 and 3, above, do not apply.

[153] UBP NOPR at 33,637.

[154] Duke and Allegheny Power raise similar arguments in connection with the timing of decrementing ATC.

[155] Duke Comments at 8.

[156] Under Standard 4.24, however, the transmission provider would not be required to accept a request if the bid price is below the transmission provider's posted offer price.

[157] VEPCO Comments at 13.

Discussion

We disagree with VEPCO's contention that Guide 4.25 is silent about what transmission providers may do if the subsequent request is not pre-confirmed. The guide specifically states that,

the [Transmission] Provider should not preempt or otherwise alter the status of that first request on receipt of a subsequent request of the same Tier and equal duration at a higher price, unless the subsequent request is submitted as pre-confirmed.

Thus, under Guide 4.25, a transmission provider could not preempt the earlier request (that it already had accepted) to, instead, accept a subsequent request of the same Tier and equal duration at a higher price that is not pre-confirmed, unless the time limit for confirmation of the earlier request had elapsed and the earlier request was not confirmed. By contrast, as further discussed in section II.D.9.a, below, if the subsequent request (for non-firm transmission service of the same duration at a higher price) is pre-confirmed, it would preempt the earlier request, because it has a higher bid price.

3. Priority from Time of Request v. Priority from Time of Confirmation

VEPCO requests clarification of a statement made in the UBP NOPR discussion of proposed Guide 4.25 that ''the first-come-first-served reservation priority of section 14.2 of the *pro forma* tariff applies from the time when a request for transmission service is made, not from the time when a request is confirmed.'' VEPCO states that its understanding of section 14.2 of the *pro forma* tariff is that reservations for non-firm service are to be prioritized based on duration of service and, in the event of competing requests of equal duration for a limited resource, the requests are to be prioritized based on price. VEPCO argues that the best construction of section 14.2 (and most consistent with the first-come-first-served principle) is that requests of equal duration and equal price must be processed in the order in which they are received. VEPCO argues that section 14.2 does not confer any additional rights on a request based on the time when the request is made.

VEPCO also asserts that

[t]he Commission declares that preservation of queue time is appropriate for firm requests since the first-come-first-served provision of section 13.2 of the *pro forma* tariff is based on the time that a request is made. The Commission states this fact in the July 17 Order and repeats it in the discussion on page 73 of the NOPR. On the other hand, our understanding is that non-firm requests do not acquire the right of first refusal until they are confirmed (see our request for clarification within our comments on Guide 4.25, below). If our understanding is correct, then preserving the queue time for non-firm requests is not relevant to the exercise of a right of first refusal for a non-firm request. In fact, the time that a non-firm request is CONFIRMED determines the order in which it is considered for right of first refusal versus other CONFIRMED non-firm requests that are also subject to displacement by the same longer-term request. If our understanding is correct, then a Transmission Customer exercising its right of first refusal should have to submit a new pre-confirmed request for non-firm service in order to match a subsequent longer-term reservation for non-firm service. Once the new preconfirmed request was ACCEPTED, it would automatically become CONFIRMED, and the time of confirmation of the new request would establish the order in which it is considered for right of first refusal in subsequent scenarios. Pre-confirmation should be a requirement in order to expedite the preemption process.

Discussion

Under section 13.2 of the *pro forma* tariff, long-term firm point-to-point transmission service is to be made available on a first-come-first-served basis and shorter term firm point-to-point transmission service (service for less than one year) [158] may be preempted on the basis of duration, but not on the basis of price.

However, under section 14.2 of the *pro forma* tariff, priorities for non-firm point-to-point transmission service are not determined based on first-come-first-served principles.[159] Under section 14.2 of the *pro forma* tariff, a transmission provider evaluates all pending requests for non-firm point-to-point transmission service at the same time. If resources are constrained, the transmission provider is to give priority based on duration. If duration is equal, the transmission provider is to give priority to those requests offering the highest price.

We agree with VEPCO that this evaluation of price is to happen before acceptance and that subsequent requests at a higher price are not to be evaluated until expiration of the customer's confirmation time limits.[160] However, under Guide 4.25, in the event that the subsequent request for non-firm point-to-point service of equal duration offers a higher price and is pre-confirmed, the transmission provider is to preempt the first request, even though the confirmation time limit has not yet expired.[161] As to the right-of-first-refusal, we will address that immediately below.

4. Right-of-First-Refusal

As quoted above, VEPCO asserts that ''non-firm requests do not acquire the right-of-first-refusal until they are confirmed.'' VEPCO also argues that section 14.2 of the *pro forma* tariff confers a right-of-first-refusal to shorter term firm point-to-point service that already has been reserved, to match any longer term reservation before being preempted. VEPCO claims that this right is acquired at the time the earlier request is CONFIRMED, because a customer's confirmation is a commitment to pay and is what gives the customer rights to capacity.

Based on this understanding, VEPCO argues that short-term unconfirmed non-firm requests could be REFUSED or SUPERSEDED outright when subsequent competing requests of longer duration are CONFIRMED. VEPCO argues that if their understanding is incorrect, then short-term unconfirmed non-firm requests have to be included along with confirmed non-firm requests in the iterative preemption process when multiple competing requests exist. VEPCO claims that this overly complicates the prioritization and preemption rules for non-firm service. Specifically, VEPCO states,

[a]ccording to section 14.2 of the *pro forma* tariff, non-firm service is what is available from transmission capability in excess of that needed for reliable service. Keeping the importance of non-firm service in perspective relative to long-term firm service and short-term firm service, it would seem that non-firm service does not warrant the highly complicated and time consuming procedures for prioritization and preemption. Therefore, we request that the Commission clarify that short-term unconfirmed non-firm requests could be REFUSED or SUPERSEDED outright when subsequent competing requests of longer duration are CONFIRMED.''

Discussion

Under section 14.2 of the *pro forma* tariff, the right-of-first-refusal to match a subsequent request for a longer duration is given only when a reservation already has been made. We consider a reservation to be made at the point when the customer confirms its

[158] Section 1.42 of the *pro forma* tariff provides that short term point-to-point transmission service has a term of less than one year.

[159] VEPCO's confusion may have resulted from an inadvertent reference in the UBP NOPR to section 14.2 of the *pro forma* tariff in responding to an argument from ECI. *See* UBP NOPR at 33,637.

[160] As seen in our discussion of Standard 4.18, in section II.D.4.d, above, this distinction becomes important in the consideration of when ATC is to be decremented. We also note that VEPCO's arguments here contradict those it raised in regard to Standard 4.18.

[161] We note that we are speaking here about preempting an unconfirmed request for transmission, not about displacing a confirmed reservation with a longer duration.

acceptance. We agree with VEPCO that a right-of-first-refusal is not extended to a request for non-firm point-to-point transmission service that has been accepted, but not yet confirmed. Such a request may be preempted without a right-of-first-refusal.

As to requests for short-term firm point-to-point transmission service, section 13.2 of the *pro forma* tariff provides for preemption before the conditional reservation deadline passes, but not after. Before the conditional reservation deadline passes, a reservation for short-term firm service is given a right-of-first-refusal to match a subsequent request for longer duration short-term firm service (price is not a factor here). As with non-firm service, we consider a reservation to be made at the point when the customer confirms its acceptance.

5. Adoption as Mandatory Standard

As discussed in section II.D.1, above, we will adopt proposed Guide 4.25 as Standard 4.25.

Standard 4.26—Right of Customer Making Request to Match a Subsequent Pre-Confirmed Request at Higher Price

As stated in the UBP NOPR, Guide 4.25 would permit Tier 4 (non-firm point-to-point) service of equal term with a higher bid price to preempt a request for the same term and lower bid price, as long as the lower bid request is not confirmed and the higher bid request is preconfirmed.[162] Guide 4.26 proposes to require a transmission provider to give the first customer the right-of-first-refusal. The exact language of Guide 4.26, as proposed in the UBP NOPR, is as follows:

Guide 4.26: If during a negotiation of service (*i.e.,* prior to Customer confirmation) a subsequent pre-confirmed request for service over the same limited resource of equal duration but higher price is received, the Provider *must* COUNTEROFFER the price of service on the prior COUNTEROFFER or ACCEPTED price to match the competing offer, in order to give the first Customer an opportunity to match the offer. This practice must be implemented in a non-discriminatory manner.

Guide 4.26, as recommended by the CPWG/How Group, stated that, ''the Provider *may* COUNTEROFFER the price.'' In the UBP NOPR, we proposed to change ''may'' to ''must'' to indicate that a transmission provider following Guide 4.26 [163] would be required to COUNTEROFFER the price to offer the first customer a right-of-first-refusal. We provided two reasons for the proposal: (1) Customers must know what to expect from a transmission provider; and (2) even though the guide provides that the practice be implemented in a non-discriminatory manner, there is too much room for discriminatory practices if providing the right to match is left optional.[164]

Comments

Duke agrees that ''may'' should be changed to ''must.'' In addition, Duke proposes that Guide 4.26 be made a standard.[165]

VEPCO claims that the purpose of the pre-confirmation process is to expedite the transition of a request from ACCEPTED to CONFIRMED and requests that we clarify that a pre-confirmed request is not negotiable because the procedures used in negotiation defeat the purpose of pre-confirmation.[166] VEPCO also argues that, if Guide 4.26 applies to situations where the first request is unconfirmed, giving the right-of-first-refusal to the first requester would unfairly penalize the submitter of a second, preconfirmed, request. VEPCO argues that, if the second request was submitted as unconfirmed, the first request would not receive the right-of-first-refusal. VEPCO states that submitting a request as pre-confirmed should not decrease the probability of receiving the requested service. VEPCO recommends that Guide 4.26 not be adopted.

Discussion

As proposed in the UBP NOPR, we will replace the word ''may'' with ''must'' in Guide 4.26. Regarding Duke's request to make Guide 4.26 a standard, as discussed in section II.D.1, above, we will adopt this guide as Standard 4.26.

As we noted above (in our discussion of proposed Guide 4.16), there was a conflict between Row 8 of proposed Table 4–3 and proposed Guide 4.26. Table 4–3, as proposed in the UBP NOPR, did not permit a right-of-first-refusal when an unconfirmed request for non-firm point-to-point service is preempted by a pre-confirmed request of equal duration and higher price, while Guide 4.26 allowed transmission providers to offer the right-of-first-refusal under the same circumstances. As discussed above, we are resolving this conflict by amending Row 8 to give the right-of-first-refusal. With this revision, there is no longer a conflict between Table 4–3 and Guide 4.26.

Regarding VEPCO's request for clarification that pre-confirmed requests are not negotiable, we disagree with VEPCO's interpretation. The current process allows a transmission provider to COUNTEROFFER the pending unconfirmed request and negotiations would go on as if the subsequent request were not pre-confirmed. VEPCO's proposal, to deny negotiations in response to pre-confirmed requests, would treat pre-confirmed requests as take-it-or-leave-it offers.

VEPCO's objection to Guide 4.26, on the grounds that by submitting the subsequent reservation as pre-confirmed a customer gives up rights he would have had if he submitted the reservation as an unconfirmed reservation, is misplaced. Submitting an unconfirmed request in this instance does not give the second customer any rights. Standard 4.25, as adopted in this Final Rule, clearly states that the Transmission Provider should not preempt or otherwise alter the status of that first request on receipt of a subsequent request of the same Tier and equal duration at a higher price, unless the subsequent request is submitted as pre-confirmed.

Standard 4.27—Curtailment of Non-Firm Point-to-Point Service

Guide 4.27, as recommended in the June 19 Report and as described (but not proposed) in the UBP NOPR, provides that curtailment (as opposed to reservation) of non-firm point-to-point transmission service should not be based on price.[167] The exact language of this provision is as follows:

Guide 4.27: Curtailment of non-firm PTP should not consider price. Based on the fact that curtailments are governed by the *pro forma* tariff, we decided, in the UBP NOPR, not to propose adoption of Guide 4.27. We invited commenters who disagreed with this view to address this matter in their comments to the UBP NOPR.

Comments

Both Florida Power Corp and VEPCO agree that Guide 4.27 should not be adopted.[168]

Discussion

In the UBP NOPR we stated that this matter is governed by the *pro forma* tariff, however, we believe some elaboration on this point would be helpful. In reviewing this provision, it is important to keep in mind the distinction between ''curtailment'' and ''interruption.'' Curtailment only refers to service not being provided based on reliability concerns. However, under

[162] UBP NOPR at 33,637–38.

[163] As we are here adopting Guide 4.26 as a standard (Standard 4.26) all transmission providers will be required to comply with its provisions.

[164] UBP NOPR at 33,638.

[165] Duke Comments at 9.

[166] VEPCO Comments at 15.

[167] UBP NOPR at 33,638.

[168] Florida Power Corp Comments at 6, VEPCO Comments at 16.

section 14.7 of the *pro forma* tariff, non-firm point-to-point service may be interrupted based on economic concerns. The distinction between ''curtailment'' and ''interruption'' is a technical distinction that can easily be confused. Adoption of Guide 4.27 as currently written might be misleading because readers might incorrectly assume that service could not be interrupted based on economic concerns. While we could rewrite the provision to incorporate the curtailment priorities of 14.7 of the *pro forma* tariff, we believe it is safer and preferable to leave these matters to the pro forma tariff, without paraphrase. Thus, we will not adopt Guide 4.27.

5. Procurement of Ancillary and Other Services

a. Transmission Provider Requirements (Standards 5.1–5.4)

In the UBP NOPR, the Commission proposed to adopt recommended Standards 5.1 and 5.3 and Guides 5.2 and 5.4. The Commission recognized that ancillary services are an essential part of a transmission services contract, and that the proposed definitions improve the OASIS reservation process by spelling out the mandatory, required, and optional ancillary services related to the transmission reservation. The exact language of these provisions, as proposed in the UBP NOPR, is as follows:

Standard 5.1: The Transmission Provider shall designate which ancillary services are MANDATORY, REQUIRED, or OPTIONAL for each offered transmission service to the extent these requirements can be determined in advance of the submittal of a reservation request on a specific Path by a Transmission Customer.

Guide 5.2: A Transmission Provider may modify a Transmission Customer's service request to indicate the Transmission Provider as the SELLER of any ancillary service, which is MANDATORY, to be taken from the Transmission Provider.

Standard 5.3: For REQUIRED and OPTIONAL services, the Transmission Provider shall *not* select a SELLER of ancillary service without the Transmission Customer first selecting that SELLER.

Guide 5.4: A Transmission Provider may accept a Transmission Customer's request for an ancillary service, which is not MANDATORY or REQUIRED, but shall indicate to the Transmission Customer at the time of acceptance under PROVIDER COMMENTS that the service is not MANDATORY or REQUIRED.

Comments

Comments were filed by Consumers [169] and VEPCO.[170] Both recommend that ancillary services be categorized on the basis of path. They contend that this approach is consistent with current OASIS technology and requirements that determine whether different ancillary services are required depending on whether a path is into, out of, or through a system. VEPCO recommends that the proposed Standard 5.1 be revised to read as follows:

The Transmission Provider shall designate which ancillary services are MANDATORY, REQUIRED, or OPTIONAL for each offered transmission service or each transmission path to the extent these requirements can be determined in advance of the submittal of a reservation request on a specific Path by a Transmission Customer.

VEPCO suggests that Guide 5.2 be modified to substitute the word ''shall'' for ''may,'' in the event a transmission customer fails to indicate the SELLER on its request for MANDATORY ancillary services, and be adopted as a standard.

VEPCO requests that the Commission clarify Standard 5.3 to indicate that the transmission provider should be permitted to modify the request to provide REQUIRED ancillary services. In support of this proposal, VEPCO provides an example illustrating the extra steps that would be required if the transmission customer fails to select a SELLER of REQUIRED ancillary services, including the submission of a new request in response to notification of an invalid request.

VEPCO suggests that Guide 5.4 is unnecessary, indicating that the only ancillary services that are not MANDATORY or REQUIRED are those designated as OPTIONAL. VEPCO further argues that Standard 5.1 clearly designates the service as OPTIONAL, and if a transmission customer requests the OPTIONAL service, the transmission provider should be allowed to assume the transmission customer actually wants the service.

Discussion

We find merit in the recommendation presented by Consumers and VEPCO to categorize ancillary services by path. It is apparent from the arguments presented that this can be accomplished with relative ease, and is consistent with the manner in which arrangements are made for such services, *i.e.,* different ancillary services are required depending on whether a path is into, out of, or through a system. Accordingly, we will revise proposed Standard 5.1 to read as follows:

Standard 5.1: The Transmission Provider shall designate which ancillary services are MANDATORY, REQUIRED, or OPTIONAL for each offered transmission service or each transmission path to the extent these requirements can be determined in advance of the submittal of a reservation request on a specific Path by a Transmission Customer.

We also find merit in VEPCO's proposal to revise proposed Guide 5.2 to ensure that the correct seller of mandatory ancillary services is shown on the OASIS. Accordingly, we will revise proposed Guide 5.2, which we adopt as Standard 5.2 as discussed below, to read as follows:

Standard 5.2: A Transmission Provider shall modify a Transmission Customer's service request to indicate the Transmission Provider as the SELLER of any ancillary service, which is MANDATORY, to be taken from the Transmission Provider.

As to Standard 5.3 and proposed Guide 5.4, while we agree with VEPCO that these provisions may create extra steps for a transmission provider, we believe that these extra steps are necessary to ensure that transmission customers are adequately informed, prior to confirmation, of what ancillary services they are to obtain from the transmission provider. Accordingly, we will adopt Standard 5.3 as proposed. In addition, as discussed in section II.D.1, above, we will adopt proposed Guides 5.2 and 5.4 as Standards 5.2 and 5.4.

b. Transmission Customer Requirements (Standards 5.5–5.6)

In the UBP NOPR, the Commission proposed to adopt Guides 5.5 and 5.6, as recommended in the June 19 Report. These guides propose that the transmission customer should inform the transmission provider, at the time of the reservation request, of certain arrangements for ancillary services. The exact language of these provisions is as follows:

Guide 5.5: The Transmission Customer should indicate with the submittal of a transmission reservation request, the preferred options for provision of ancillary services, such as the desire to use an alternative resource.

Guide 5.6: A Transmission Customer may, but is not required to, indicate a third party SELLER of ancillary services, if these services are arranged by the Transmission Customer off the OASIS and if such arrangements are permitted by the Transmission Provider's tariff.

Comments

VEPCO concurs with Guide 5.5 provided that, if the transmission customer fails to indicate its preferred options for provision of ancillary services, the transmission provider is permitted to modify the request so that it is designated as the default SELLER

[169] Consumers Comments at 3.

[170] VEPCO Comments at 16.

of the ancillary service.[171] Similarly, VEPCO concurs with Guide 5.6, provided that, if a transmission customer fails to indicate a third party SELLER of ancillary services and the transmission provider has not approved the arrangement between the transmission customer and any third party SELLER, the transmission provider may modify the request to designate itself as the default SELLER of the ancillary service.

AEP asserts that the transmission customer should be required to identify the SELLER in sufficient detail to enable the transmission provider to assure that the services will be provided and it (as control area operator) will not be left as the default transmission provider of such service. AEP supports this argument, by noting that transmission providers are responsible for the reliability of the transmission system, and must have the ability to verify that adequate arrangements have been made for ancillary services.[172]

Discussion

We agree with the commenters that transmission providers need timely notice from customers as to which ancillary services they will be obtaining from the transmission provider, and which they will be obtaining from other sellers. As we stated in the UBP NOPR,

> [t]he June 19 Report recommends that the transmission customer should make known to the transmission provider (at the time of the reservation request) certain options related to arrangement of ancillary services, including taking all the MANDATORY and REQUIRED ancillary services from the primary provider, taking REQUIRED ancillary services from a third party seller, purchasing OPTIONAL services, and arranging for ancillary services in the future (prior to scheduling).[173]

We also agree with AEP that transmission providers are responsible for the reliability of the transmission system, and that

> the customer should be required to identify the seller in sufficient detail to enable the Transmission Provider to assure that the services will be provided and not be left to it as a control area operator to be a default provider of such service.[174]

Given these concerns, and given that the *pro forma* tariff allows a transmission provider to require that customers specify their ancillary service providers when they make their reservations, we will follow VEPCO's suggestion to have the transmission provider post itself as the default ancillary service provider, if a transmission customer fails to indicate a third party SELLER of ancillary services. However, we will also allow the transmission customer to make a change at a later date, so long as this change is made prior to the scheduling deadline. This change can be made without changing the reservation priority. In addition, as discussed in section II.D.1, above, we will adopt Guides 5.5 and 5.6 as Standards 5.5 and 5.6. We therefore will adopt Standards 5.5 and 5.6 that provide as follows:

Standard 5.5: The Transmission Customer should indicate with the submittal of a transmission reservation request, the preferred options for provision of ancillary services, such as the desire to use an alternative resource. The Transmission Provider shall post itself as the default ancillary service provider, if a Transmission Customer fails to indicate a third party SELLER of ancillary services. However, the Transmission Customer may change this designation at a later date, so long as this change is made prior to the Transmission Provider's scheduling deadline.

Standard 5.6: A Transmission Customer may, but is not required to, indicate a third party SELLER of ancillary services, if these services are arranged by the Transmission Customer off the OASIS and if such arrangements are permitted by the Transmission Provider's tariff. The Transmission Provider shall post itself as the default ancillary service provider, if a Transmission Customer fails to indicate a third party SELLER of ancillary services. However, the Transmission Customer may change this designation at a later date, so long as this change is made prior to the Transmission Provider's scheduling deadline.

6. Pathnaming Standards (Standards 6.1–6.4)

In the UBP NOPR, the Commission proposed Standards 6.1, 6.2 and 6.3 and Guide 6.4 as recommended by the CPWG/How Group. These standards and guide propose using previously optional fields in the S&CP Document to specify control area codes for PORs and PODs. The Commission concluded that this should provide consistency in path naming, and efficiency in the reservation process. The exact language of these provisions, as proposed in the UBP NOPR, is as follows:

Standard 6.1: A transmission provider shall use the path naming convention defined in the S&CP Data Dictionary for the naming of all reservable paths posted on OASIS.

Standard 6.2: A transmission provider shall use the third field in the path name to indicate the sending and receiving control areas. The control areas shall be designated using standard NERC codes for the control areas, separated by a hyphen. For example, the first three fields of the path name will be:

RR/TPTP/CAXX–CAYY/

Standard 6.3: A transmission provider shall use the fourth field of the path name to indicate POR and POD separated by a hyphen. For example, a path with a specific POR/POD would be shown as:

RR/TPTP/CAXX–CAYY/PORPORPORPOR–PODPODPODPOD/

If the POR and POD are designated as control areas, then the fourth field may be left blank (as per the example in 6.2).

Guide 6.4: A transmission provider may designate a sub-level for Points of Receipt and Delivery. For example, a customer reserves a path to POD AAAA. The ultimate load may be indeterminate at the time. Later, the customer schedules energy to flow to a particular load that may be designated by the transmission provider as a sub-level Point of Delivery. This option is necessary to ensure certain providers are not precluded from using more specific service points by the inclusion of the POR/POD in the path name. All sub-level PORs and PODs must be registered as such on *www.tsin.com.*

Comments

VEPCO agrees with the adoption of Standards 6.1, 6.2, and 6.3. However, it seeks clarification of whether, under Guide 6.4, it is possible for a transmission customer to change a POR or POD after a request has been submitted. If so, VEPCO would not object to Guide 6.4, as long as it remains a guide and does not compel a transmission provider to allow transmission customers to change PORs and PODs after transmission customers have submitted requests.[175]

Discussion

The comments raise no objection to Standards 6.1, 6.2, and 6.3. As to Guide 6.4, VEPCO has failed to persuade us that Guide 6.4 should not be adopted as a mandatory standard. VEPCO's concerns are unfounded because, by its terms, Standard 6.4 (even though mandatory) only applies to transmission providers who designate sub-levels for PORs and PODs. A transmission provider need not make such designations, unless it so chooses. In addition, as requested by VEPCO, we clarify that Guide 6.4 does not imply that transmission customers may change PORs and PODs after confirmation. Thus, we will adopt Standards 6.1, 6.2, and 6.3, and, as discussed in section II.D.1, above, will adopt Guide 6.4, as Standard 6.4.

7. Revisions to the S&CP Document

Elsewhere in this Final Rule we have directed that revisions be made to the S&CP Document. For convenience, we

[171] VEPCO Comments at 17.

[172] AEP Comments at 6.

[173] UBP NOPR at 33,639–40.

[174] AEP Comments at 6.

[175] VEPCO Comments at 19.

will summarize all of these revisions here.

As discussed in section II.D.2.c, above, we will revise the definition of ''non-firm'' in Standard 2.2.2 to clarify that the firm service that gets priority over non-firm service includes service to Native Load Customers and Network Customers. As discussed in section II.D.2.e, above, we will replace the Data Dictionary Element ANC SERVICE TYPE'' in the S&CP Document with the term ''AS TYPE.'' As discussed in section II.D.4.b, above, will revise the definition of ''superseded'' in the Data Element Dictionary and in section 4.2.10.2 of the S&CP Document, as follows:

SUPERSEDED = assigned by Provider or Seller when a request which has not yet been confirmed is preempted by another reservation request. (Final state).

Also, as discussed in section II.D.4.d, above, we will revise the definition of ''displaced'' in the Data Element Dictionary and in section 4.2.10.2 of the S&CP Document, as follows:

DISPLACED = assigned by Provider or Seller when a ''CONFIRMED'' reservation from a Customer is replaced by a longer term reservation and the Customer has not exercised right of first refusal, if any (*i.e.,* refused to match terms of new request). (Final state).

Further, as discussed in section II.D.2.e, above, we will replace the Data Dictionary Element ''ANC SERVICE TYPE'' in the S&CP Document with the term ''AS TYPE.''[176]

Finally, as discussed in section II.D.4.b, above, we will clarify the definition of ''REFUSED'' in the Data Element Dictionary and in section 4.2.10.2 of the S&CP Document, as proposed in the UBP NOPR, by inserting the words ''lack of'' before the word ''availability.'' Cinergy supports the change and no commenters oppose it. We, therefore, will adopt a revised definition of ''REFUSED'' in the Data Element Dictionary and in section 4.2.10.2 of the S&CP Document as follows:

REFUSED = assigned by Provider or Seller to indicate service request has been denied due to lack of availability of transmission capability. SELLER COMMENTS should be used to communicate details for denial of service. (Final state).

Although we order these changes to become effective as of the effective date of this Final Rule,[177] we will not issue a complete, revised S&CP Document at this time. It is our intention to issue a complete, revised S&CP Document in the near future that will include additional revisions that we contemplate making after receipt of recommendations from the MIC/How Group (*see* discussion below).

Requests to Industry Working Groups

As discussed in various sections above, we are making several requests to the MIC/How Groups regarding revisions to the S&CP Document. For convenience, we will summarize all of these requests here.

First, in section II.D.1, we request that the MIC/How Group report back to the Commission, within 9 months of the implementation date of these standards, with their recommendations as to any necessary revisions, additions, or enhancements to the BPS that the industry suggests based on its experience doing business under them.

Second, in section II.D.2.f, we request that the MIC/How Group consider the following questions and report back, within ninety (90) days of the date of publication of this order in the **Federal Register**, with their recommendations as to any necessary revisions or additions to the BPS to reflect the Commission's findings in the Next Hour Order:

(1) Where in the BPS should the definitions of the scheduling period for ''same-day'' and ''next-hour'' transactions (as recommended in Guides 2.6–2.6.2) be located?

(2) Should the BPS include a definition of NHM Service?

(3) Should the Commission revise Tables 4–2 and 4–3 and related provisions to reflect the availability of NHM Service and its priority vis a vis other transmission services?

(4) Should the Commission adopt proposed Guides 4.2 and 4.3?[178]

(5) In light of the Next Hour Order, are any other revisions to the BPS needed?

Third, consistent with our adoption, in section II.D.4.b, of Standards 4.4 and 4.5, we request that, within ninety (90) days of the date of publication of this order in the **Federal Register**, the MIC/How Group submit its recommendations on any necessary changes to the State Diagram and definitions in the S&CP Document to accommodate a transmission provider notifying a customer that he has the right-of-first-refusal and a customer's response.

Fourth, in section II.D.4.c, we request that the MIC, with input from any interested persons, consider the proposals regarding Table 4–2 presented by AEP, BPA, Duke, and VEPCO, along with other possible options, and that the MIC report back to us on these matters as part of its nine-month report, giving the MIC's recommendations on any further revisions to Table 4–2 that might be needed, along with any dissenting views and the reasons why those views were not adopted by the group as a whole.

Fifth, in section II.D.4.d, we request that the MIC and How Group consider VEPCO's suggestion to add a new STATUS, ''preempted with right of first refusal,'' to the State Diagram and to recommend, within ninety (90) days of the date of publication of this order in the **Federal Register**, whatever changes would be appropriate to the State Diagram, templates, and the S&CP Document to implement the right-of-first-refusal, for implementation as a standard.

9. CPWG/How Group Recommended Revisions to the Pro Forma Tariff

a. Section 14.2—Reservation Priority

In the UBP NOPR, we considered recommendations from the CPWG/How Working Groups (in the June 19 Report) that adoption of certain recommended guides and standards might require modifications to section 14.2 of the *pro forma* tariff. Notwithstanding these concerns, we concluded, preliminarily, that adoption of the recommended Business Practices could be accomplished without the need to make any revisions to the *pro forma* tariff.

Comments

VEPCO filed the sole comments on this issue. VEPCO concurs with the proposal in the UBP NOPR to leave section 14.2 of the *pro forma* tariff unchanged, but seeks clarification as to whether transmission providers need to file revisions to their individual open access tariffs in order to implement the pre-confirmation procedures outlined in Standards 4.16, 4.25, and 4.26.[179]

Discussion

In the UBP NOPR, the Commission found, preliminarily, that there was no compelling reason for changing section 14.2 of the *pro forma* tariff at this time. As none of the comments challenge this conclusion, we now adopt it as a finding of this Final Rule.

VEPCO requests that the Commission clarify its position on whether transmission providers must file revisions to their individual open access tariffs to implement the pre-confirmation proposals proposed in the UBP NOPR. VEPCO asserts,

a pre-confirmation procedure simply provides a mechanism by which to expedite the confirmation of an accepted request. In our view, pre-confirmation does not confer

[176] In addition, for consistency, we will change the ''alias'' appearing in the Data Element Dictionary from ''ANCTYPE'' to ''ASTYPE.''

[177] Sixty (60) days from the date of publication of this Final Rule in the **Federal Register.**

[178] *See* discussion in section II.D.4.a.

[179] VEPCO Comments at 18.

any special rights to a request that it would enjoy either prior to or after acceptance of the request by the Transmission Provider.'' [180]

The Commission's position on pre-confirmation, as applied to section 14.2 of the *pro forma* tariff, was described in our discussion of Standards 4.25 and 4.26, above. VEPCO's position is not totally accurate. Pre-confirmation has certain ramifications. For example, Standard 4.25 provides that subsequent pre-confirmed requests for non-firm transmission service immediately preempt earlier lower-priced bid requests for the same duration service. However, we agree that there is some basis for VEPCO's position. This can be illustrated in the above example, if we assume that the subsequent request is pre-confirmed. In this case, the subsequent request would preempt the earlier request because it has a higher bid price. However, without pre-confirmation, the earlier request would not be preempted until the subsequent request was confirmed, rather than upon acceptance by the transmission provider as is the case with pre-confirmation.

We stand by our earlier conclusion in the UBP NOPR that our policies on pre-confirmation (that we are here adopting in Standards 4.16, 4.25, and 4.26) do not necessitate revisions to section 14.2 of the *pro forma* tariff, because, as we stated in the UBP NOPR, we do not view pre-confirmation to be in conflict with the *pro forma* tariff.

Finally, in response to VEPCO's request for clarification, on further consideration, we do not believe that transmission providers need to file any revisions to their individual Open Access Tariffs to accept pre-confirmed requests for transmission service.

b. Section 14.7—Curtailment or Interruption of Service

In the UBP NOPR, we stated that we were not persuaded to make any modifications to section 14.7 of the *pro forma* tariff at this time. This was discussed in the UBP NOPR and based on the consideration that the Uniform Business Practices recommended in the June 19 Report could be implemented without tariff changes.

Comments

VEPCO concurs with the Commission's conclusion not to make changes to section 14.7 of the *pro forma* tariff.

Discussion

The Commission maintains its conclusion proposed in the UBP NOPR that there is no compelling reason for changing section 14.7 of the *pro forma* tariff at this time. None of the comments suggest otherwise.[181]

c. Section 17.5—Response to a Completed Application

In the UBP NOPR, we stated that we were not persuaded to make any modifications to section 17.5 of the *pro forma* tariff at this time. This was discussed in the UBP NOPR and based on the consideration that the Uniform Business Practices recommended in the June 19 Report could be implemented without tariff changes.

Comments

VEPCO agrees with the Commission's decision not to make changes to section 17.5 of the *pro forma* tariff. VEPCO filed the sole comments on this issue.

Discussion

The Commission maintains its conclusion proposed in the UBP NOPR that there is no compelling reason for changing section 17.5 of the *pro forma* tariff at this time. None of the comments suggested otherwise.

III. Regulatory Flexibility Act

The Regulatory Flexibility Act (RFA),[182] requires the Commission to describe the impact that any proposed or final rule would have on small entities or to certify that the rule, if promulgated, will not have a significant economic impact on a substantial number of small entities.

The mandatory standards adopted in this Final Rule are applicable to the same entities subject to the requirements of the OASIS Final Rule (*i.e.*, public utilities).[183] Those entities exempt from the requirement to conduct business on the OASIS are likewise exempt from the requirements of this Final Rule.

Moreover, as we explained in Order No. 889–A, under appropriate circumstances the Commission will grant waiver of the OASIS Final Rule requirements to small public utilities. We further explained that the Commission's waiver policy follows the SBA definition of small electric utility [184] and that 34 small entities had received waivers of the requirement to establish and maintain an OASIS and five small entities had received waivers of the OASIS Standards of Conduct requirements.[185] These decisions show that the Commission carefully evaluates the effect of the OASIS Final Rule on small electric utilities and is granting waivers where appropriate, thus mitigating the effect of that rule on small public and non-public utilities.

This Final Rule merely increases the uniformity of the business practices public utilities already have adopted to comply with Order Nos. 888 and 889 and other Commission orders. This being the case, under section 605(b) of RFA, the Commission hereby certifies that this Final Rule will not have a significant economic impact on a substantial number of small entities within the meaning of RFA. Accordingly, no regulatory flexibility analysis is required pursuant to section 603 of RFA.

IV. Environmental Statement

Commission regulations require that an environmental assessment or an environmental impact statement be prepared for a Commission action that may have a significant effect on the human environment.[186] In the Commission's view, the environmental impact of this proposal is negligible. Transmission providers necessarily already follow business practices in conducting their OASIS transactions. This proposal merely adds some uniformity to the process. Accordingly, we find that this Final Rule does not propose any action that may have a significant effect on the human environment and that no environmental impact statement is required.

V. Public Reporting Burden

This final rule adopts a set of uniform business practices, as set out in the accompanying BPS, that requires transmission providers to comply with

[180] *Id.*

[181] We note that in section II.D.4.d, above, we found that Standards 4.22 and 4.23 are not in conflict with section 14.7 of the *pro forma* tariff and that adoption of Standards 4.22 and 4.23 does not necessitate any revision of section 14.7 of the *pro forma* tariff.

[182] 5 U.S.C. 601–612.

[183] In the OASIS Final Rule, we noted that the entities that would have to comply with the OASIS Final Rule are public utilities. *See* Order No. 899–A, FERC Stats. & Regs ¶ 31,049 at 30,578.

[184] *See* 5 U.S.C. 601(3), 5 U.S.C. 601(6), and 15 U.S.C. 632(a). The RFA defines a small entity as one that is independently owned and not dominant in its field of operation. *See* 15 U.S.C. 632(a). The Small Business Administration defines a small electric utility as one that disposes of 4 million MWh or less of electric energy in a given year. *See* 13 CFR 121.601 (Major Group 49—Electric, Gas and Sanitary Services).

In the Open Access Final Rule, we concluded that, under these definitions, the Open Access Final Rule and the OASIS Final Rule would not have a significant economic impact on a substantial number of small entities. We reaffirmed that conclusion in Order Nos. 888–A and 889–A.

[185] *See* Order No. 889–A, FERC Stats. & Regs. ¶ 31,049 at 30,578.

[186] Regulations Implementing National Environmental Policy Act, Order No. 486, 52 FR 47897 (Dec. 17, 1987); 1986–90 Regs. Preambles FERC Stats. & Regs. ¶ 30,783 (Dec. 10, 1987) (*codified* at 18 CFR Part 380).

the Commission's policies on transmission service price negotiation and that governs interactions between transmission providers and customers over OASIS nodes. By necessity, transmission providers already follow business practices in operating their OASIS nodes. This final rule makes these practices more uniform across the industry.

This final rule retains the burden estimate used in the UBP NOPR. The UBP NOPR incorporated the Commission's burden estimate in Docket No. IC99–717–000 because it covered all information collected under the requirements of FERC–717 ''Open Access Same-Time Information System and Standards of Conduct'' (OMB No. 1902–173) from December 1998-December 2001, including the implementation of OASIS Phase IA and any information collected under the UBP NOPR.[187]

None of the 19 comments filed in response to the UBP NOPR took issue with the burden estimate. However, on February 5, 1999, EEI filed comments with OMB in Docket No. IC99–717–000 arguing that the Commission understated companies' overall OASIS cost-projections and citing instances where companies incurred higher costs than projected in that proceeding. On May 12, 1999, the Commission filed a response with OMB to EEI's comments where we acknowledged that some customers may have had higher costs than estimated in FERC–717 but that EEI had not shown that these higher costs were typical or that the Commission's projections were not valid on a composite basis. We also explained that a part of these higher costs was attributable to start-up costs (which are always higher) and that start-up costs had been excluded from the Commission's projections. After a review of these comments, OMB approved the Commission's OASIS burden estimate on August 18, 1999.

Internal Review

For this final rule, we again are relying on the Commission's burden estimate in Docket No. IC99–717–000 as our burden estimate, as we did with the UBP NOPR, because the burden estimate in Docket No. IC99–717–000 covers all information collected under the requirements of FERC–717 ''Open Access Same-Time Information System and Standards of Conduct'' (OMB No. 1902–0173). After conducting an internal review of the public reporting burden imposed by this final rule, we are convinced, by means of our internal review, that there is specific, objective support for this information burden estimate. Moreover, the Commission has reviewed the collection of information adopted in this final rule and has determined that this collection of information is necessary and conforms to the Commission's plan, as described in this order, for the collection, efficient management, and use of the required information.[188]

VI. Information Collection Statement

Based on our experience in OASIS implementation over the past four years, the Commission has refined the estimate of reporting entities covered by OASIS regulations. Our latest estimate is that 140 respondents are required to collect information under the OASIS regulations. However, as discussed above, this Final Rule does not impose any new information collection burdens. Collectively, the OASIS rulemaking information collection is covered by FERC–717 as covered by our December 1, 1998 proposed information collection and request for comments in Docket No. IC99–717–000, as follows:

Information Collection Statement:

Title: FERC–717, Open Access Same-time Information Systems and Standards of Conduct.

Action: Proposed Collection.

OMB Control No: 1902–0173.

Respondents: Business or other for profit, including small business.

Frequency of Responses: On Occasion.

Necessity of the information: The Final Rule issues uniform business practices for OASIS Phase IA transactions and path name conventions, replaces the Data Dictionary Element ''ANC SERVICE TYPE'' in the OASIS Standards and Communication Protocols Document (Version 1.3) with the term ''AS TYPE,'' and clarifies the terms ''DISPLACED,'' ''SUPERSEDED,'' and ''REFUSED'' in the Data Dictionary Element and section 4.2.10.2 of the S&CP Document. These requirements are intended to support arrangements made for wholesale sales and purchases for third parties. Public utilities and/or their agents will operate under more uniform business practices, which will improve the operation of OASIS sites.

Regulations of the Office of Management and Budget (OMB)[189] require OMB to approve certain information collection requirements imposed by agency rule. The information collection requirements in this Final Rule will be reported directly to transmission users and will be subject to subsequent audit by the Commission. The distribution of these data will help the Commission carry out its responsibilities under Part II of the FPA.

The Commission is submitting notification of this Final Rule to OMB. Persons wishing to comment on the collections of information proposed by this Final Rule should direct their comments to: Desk Officer for FERC, OMB, Room 10202 NEOB, Washington, D.C. 20503, phone 202–395–3087, facsimile 202–395–7285. Comments must be filed with OMB within 30 days of publication of this document in the **Federal Register**. Three copies of any comments filed with OMB should be sent to the following address: Mr. David P. Boergers, Secretary, Federal Energy Regulatory Commission, Room 1A, 888 First Street, NE, Washington, DC 20426. For further information on the reporting requirements, contact Michael Miller at (202) 208–1415.

VII. Effective Date and Congressional Notification

This rule will take effect May 30, 2000. The Commission has determined, with the concurrence of the Administrator of the Office of Information and Regulatory Affairs of the Office of Management and Budget, that this Rule is not a ''major rule'' within the meaning of section 351 of the Small Business Regulatory Enforcement Act of 1996.[190]

The Rule will be submitted to both Houses of Congress and the Comptroller General prior to its publication in the **Federal Register.**

VIII. Document Availability

In addition to publishing the full text of this document in the **Federal Register**, the Commission provides all interested persons an opportunity to view and/or print the contents of this document via the Internet through FERC's Home Page (*http://www.ferc.fed.us*) and in FERC's Public Reference Room during normal business hours (8:30 a.m. to 5:00 p.m. Eastern time) at 888 First Street, NE, Room 2A, Washington, DC 20426.

From FERC's Home Page on the Internet, this information is available in both the Commission Issuance Posting System (CIPS) and the Records and Information Management System (RIMS).

—CIPS provides access to the texts of formal documents issued by the Commission since November 14, 1994.

[187] UBP NOPR at 33,605.

[188] *See* 44 U.S.C. 3506(c).

[189] 5 CFR 1320.11.

[190] 5 U.S.C. 804(2).

—CIPS can be accessed using the CIPS link or the Energy Information Online icon. The full text of this document is available on CIPS in ASCII and WordPerfect 8.0 format for viewing, printing, and/or downloading.

—RIMS contains images of documents submitted to and issued by the Commission after November 16, 1981. Documents from November 1995 to the present can be viewed and printed from FERC's Home Page using the RIMS link or the Energy Information Online icon. Descriptions of documents back to November 16, 1981, are also available from RIMS-on-the-Web; requests for copies of these and other older documents should be submitted to the Public Reference Room.

User assistance is available for RIMS, CIPS, and the Website during normal business hours from our Help line at (202) 208–2222 (E-Mail to *WebMaster@ferc. fed.us*) or the Public Reference at (202) 208–1371 (E-Mail to *public.referenceroom@ferc.fed.us*).

During normal business hours, documents can also be viewed and/or printed in FERC's Public Reference Room, where RIMS, CIPS, and the FERC Website are available. User assistance is also available.

List of Subjects in 18 CFR Part 37

Conflict of interests, Electric power plants, Electric utilities, Reporting and recordkeeping requirements.

By the Commission. Commissioner Hébert concurred with a separate statement attached.

David P. Boergers,

Secretary.

In consideration of the foregoing, the Commission hereby adopts the attached ''Business Practice Standards for Open Access Same-time Information System (OASIS) Transactions'' and amends Part 37 in Chapter I, Title 18, Code of Federal Regulations, as set forth below.

PART 37—OPEN ACCESS SAME-TIME INFORMATION SYSTEMS AND STANDARDS OF CONDUCT FOR PUBLIC UTILITIES

1. The authority citation for part 37 continues to read as follows:

Authority: 16 U.S.C. 791–825r, 2601–2645; 31 U.S.C. 9701; 42 U.S.C. 7101–7352.

2. Section 37.5 is amended by revising paragraph (b) to read as follows:

§ 37.5 Obligations of Transmission Providers and Responsible Parties.

* * * * *

(b) A Responsible Party must:

(1) Provide access to an OASIS providing standardized information relevant to the availability of transmission capacity, prices, and other information (as described in this Part) pertaining to the transmission system for which it is responsible;

(2) Operate the OASIS in compliance with the standardized procedures and protocols found in *OASIS Standards and Communication Protocols,* which can be obtained from the Public Reference and Files Maintenance Branch, Room 2A, Federal Energy Regulatory Commission, 888 First Street NE, Washington, DC 20426; and

(3) Operate the OASIS in compliance with the *Business Practice Standards for Open Access Same-time Information System (OASIS) Transactions,* which can be obtained at the same address as provided in paragraph (b)(2) of this section.

* * * * *

Note: This attachment will not appear in the Code of Federal Regulations.

Attachment A.—Federal Energy Regulatory Commission Business Practice Standards for Open Access Same-Time Information System (OASIS) Transactions

Version 1.1 (Issued February 25, 2000)

Table of Contents

Section
Table of Contents
Section 1—Introduction
1.1 Business Practice Standards
Section 2—Standard Terminology for Transmission and Ancillary Services
2.1 Attribute Values Defining the Period of Service
2.2 Attribute Values Defining Service Class
2.3 Attribute Values Defining Service Types
2.4 Curtailment Priorities
2.5 Other Service Attribute Values
Section 3—OASIS Registration Procedures
3.1 Entity Registration
3.2 Process to Register Non-Standard Service Attribute Values
3.3 Registration of Points of Receipt and Delivery
Section 4—On-line Negotiation and Confirmation Process
4.1 On-line Price Negotiation in Short-term Markets
4.2 Phase IA Negotiation Process State Transition Diagram
4.3 Negotiations—Without Competing Bids
4.4 Negotiations—With Competing Bids for Constrained Resources
Section 5—Procurement of Ancillary and Other Services
5.1 Introduction
5.2 Transmission Provider Requirements
5.3 Transmission Customer Requirements
Section 6—Pathnaming Standards
6.1 Introduction
6.2 Transmission Provider Requirements

Section 1—Introduction

This document contains business practice standards designed to implement the Commission's policy related to on-line price negotiation and to improve the commercial operation of the Open Access Same-Time Information System (OASIS).

Section 1.1 Business Practice Standards

This document adopts OASIS business practice standards as mandatory requirements.

Section 2—Standard Terminology for Transmission and Ancillary Services

Section 2.1 Attribute Values Defining the Period of Service

The data templates of the Phase IA Standards & Communication Protocols (S&CP) Document have been developed with the use of standard service attributes in mind. What the Phase IA S&CP Document does not offer are specific definitions for each attribute value. This section offers standards for these service attribute definitions to be used in conjunction with the Phase IA data templates.

''Fixed'' services are associated with transmission services whose periods align with calendar periods such as a day, week, or month. ''Sliding'' services are fixed in duration, such as a week or month, but the start and stop time may slide. For example a ''sliding'' week could start on Tuesday and end on the following Monday. ''Extended'' allows for services in which the start time may ''slide'' and also the duration may be longer than a standard length. For example an ''extended'' week of service could be nine consecutive days. Various transmission service offerings using these terms are defined in Standards 2.1.1 through 2.1.13 below.

Table 1–1 identifies the definitions that are proposed as standard terminology in OASIS Phase IA for the attributes SERVICE INCREMENT (Hourly, Daily, Weekly, Monthly, and Yearly) and WINDOW (Fixed, Sliding, and Extended). A definition is required for each combination of SERVICE INCREMENT and WINDOW, except Hourly Sliding and Hourly Extended, which, at the present, are not sufficiently common in the market to require standard definitions.

TABLE 1–1.—STANDARD SERVICE ATTRIBUTE DEFINITIONS REQUIRED IN PHASE IA

	Fixed	Sliding	Extended [1]
Hourly	X	N/A	N/A
Daily	X	X	X
Weekly	X	X	X
Monthly	X	X	X
Yearly	X	X	X

[1] Included in the Phase IA S&CP Data Dictionary, Version 1.3, issued September 29, 1998.

The existence of a definition in this table does not imply the services must be offered by a Transmission Provider. Requirements as to which services must be offered are defined by regulation and tariffs.

Each definition assumes a single time zone specified by the Transmission Provider. It is recognized that daylight time switches must be accommodated in practice, but they have been omitted in the definitions for the purpose of simplicity.

Standard 2.1: A Transmission Provider shall use the values and definitions below for the attributes Service Increment and Window for all transmission services offered on OASIS, or shall post alternative attribute values and associated definitions on the OASIS Home Page at www.tsin.com, or shall use existing attribute values and definitions posted by other Transmission Providers. (*See* Section 3 for registration requirements.)

Standard 2.1.1: Fixed Hourly—The service starts at the beginning of a clock hour and stops at the end of a clock hour.

Standard 2.1.2: Fixed Daily—The service starts at 00:00 and stops at 24:00 of the same calendar date (same as 00:00 of the next consecutive calendar date).

Standard 2.1.3: Fixed Weekly—The service starts at 00:00 on Monday and stops at 24:00 of the following Sunday (same as 00:00 of the following Monday).

Standard 2.1.4: Fixed Monthly—The service starts at 00:00 on the first date of a calendar month and stops at 24:00 on the last date of the same calendar month (same as 00:00 of the first date of the next consecutive month).

Standard 2.1.5: Fixed Yearly—The service starts at 00:00 on the first date of a calendar year and ends at 24:00 on the last date of the same calendar year (same as 00:00 of the first date of the next consecutive year).

Standard 2.1.6: Sliding Daily—The service starts at the beginning of any hour of the day and stops exactly 24 hours later at the same time on the next day.

Standard 2.1.7: Sliding Weekly—The service starts at 00:00 of any date and stops exactly 168 hours later at 00:00 on the same day of the next week.

Standard 2.1.8: Sliding Monthly—The service starts at 00:00 of any date and stops at 00:00 on the same date of the next month (28–31 days later). If there is no corresponding date in the following month, the service stops at 24:00 on the last day of the next month.

For example: Sliding Monthly starting at 00:00 on January 30 would stop at 24:00 on February 28 (same as 00:00 March 1).

Standard 2.1.9: Sliding Yearly—The service starts at 00:00 of any date and stops at 00:00 on the same date of the following year. If there is no corresponding date in the following year, the service stops at 24:00 on the last day of the same month in the following year.

For example Sliding Yearly service starting on February 29 would stop on February 28 of the following year.

Standard 2.1.10: Extended Daily—The service starts at any hour of a day and stops more than 24 hours later and less than 168 hours later.

Standard 2.1.11: Extended Weekly—The service starts at 00:00 of any date and stops at 00:00 more than one week later, but less than four weeks later.

Standard 2.1.12: Extended Monthly—The service starts at 00:00 of any date and stops at 00:00 more than one month later, but less than twelve months later.

Standard 2.1.13: Extended Yearly—The service starts at 00:00 of any date and stops at 00:00 more than one year later, but must be requested in increments of full years.

Section 2.2 Attribute Values Defining Service Class

Standard 2.2: A Transmission Provider shall use the values and definitions below to describe the service CLASS for transmission services offered on OASIS, or shall post alternative attribute values and associated definitions on the OASIS Home Page at www.tsin.com, or shall use the attribute values and definitions posted by other Transmission Providers. (See Section 3 for registration requirements.)

Standard 2.2.1: Firm—Transmission service that always has priority over NON-FIRM transmission service and includes Native Load Customers, Network Customers, and any transmission service not classified as non-firm in accordance with the definitions in the *pro forma* tariff.

Standard 2.2.2: Non-Firm—Transmission service that is reserved and/or scheduled on an as-available basis and is subject to curtailment or interruption at a lesser priority compared to Firm transmission service, including Native Load Customers and Network Customers, in accordance with the definitions in the *pro forma* tariff.

Section 2.3 Attribute Values Defining Service Types

Standard 2.3: A Transmission Provider shall use the values and definitions below to describe the service TYPE for transmission services offered on OASIS, or shall post alternative attribute values and associated definitions on the OASIS Home Page at www.tsin.com, or shall use the attribute values and definitions posted by other Transmission Providers. (See Section 3 for registration requirements.)

Standard 2.3.1: Point-to-point (PTP)—Transmission service that is reserved and/or scheduled between specified Points of Receipt and Delivery pursuant to Part II of the *pro forma* tariff and in accordance with the definitions in the *pro forma* tariff.

Standard 2.3.2: Network—Network Integration Transmission Service that is provided to serve a Network Customer load pursuant to Part III of the *pro forma* tariff and in accordance with the definitions in the *pro forma* tariff.

Section 2.4 Curtailment Priorities

Standard 2.4: A Transmission Provider that has adopted NERC TLR Procedures shall use the curtailment priority definitions contained in NERC TLR Procedures for NERC CURTAILMENT PRIORITY (1–7) for all transmission services offered on OASIS. A Transmission Provider that has adopted alternative curtailment procedures shall post its alternative attribute values and associated definitions on the OASIS Home Page at www.tsin.com, or shall use attribute values and definitions posted by another Transmission Provider. (*See* Section 3 for registration requirements.)

Section 2.5 Other Service Attribute Values

The Commission has defined six ancillary services in Order No. 888. Other services may be offered pursuant to filed tariffs.

Standard 2.5: A Transmission Provider shall use the definitions below to describe the AS TYPEs offered on OASIS, or shall post alternative attribute values and associated definitions on the OASIS Home Page at www.tsin.com, or shall use attribute values and definitions posted by another Transmission Provider. (See Section 3 for registration requirements.)

FERC Ancillary Services Definitions

Standard 2.5.1: Scheduling, System Control and Dispatch Service (SC)—is necessary to the provision of basic transmission service within every control area. This service can be provided only by the operator of the control area in which the transmission facilities used are located. This is because the service is to schedule the movement of power through, out of, within, or into the control area. This service also includes the dispatch of generating resources to maintain generation/load balance and maintain security during the transaction and in accordance with section 3.1 (and Schedule 1) of the *pro forma* tariff.

Standard 2.5.2: Reactive Supply and Voltage Control from Generation Sources Service (RV)—is the provision of reactive power and voltage control by generating

facilities under the control of the control area operator. This service is necessary to the provision of basic transmission service within every control area and in accordance with section 3.2 (and Schedule 2) of the *pro forma* tariff.

Standard 2.5.3: Regulation and Frequency Response Service (RF)—is provided for transmission within or into the transmission provider's control area to serve load in the area. Customers may be able to satisfy the regulation service obligation by providing generation with automatic generation control capabilities to the control area in which the load resides and in accordance with section 3.3 (and Schedule 3) of the *pro forma* tariff.

Standard 2.5.4: Energy Imbalance Service (EI)—is the service for transmission within and into the transmission provider's control area to serve load in the area. Energy imbalance represents the deviation between the scheduled and actual delivery of energy to a load in the local control area over a single hour and in accordance with section 3.4 (and Schedule 4) of the *pro forma* tariff.

Standard 2.5.5: Operating Reserve—Spinning Reserve Service (SP)—is provided by generating units that are on-line and loaded at less than maximum output. They are available to serve load immediately in an unexpected contingency, such as an unplanned outage of a generating unit and in accordance with section 3.5 (and Schedule 5) of the *pro forma* tariff.

Standard 2.5.6: Operating Reserve—Supplemental Reserve Service (SU)—is generating capacity that can be used to respond to contingency situations. Supplemental reserve is not available instantaneously, but rather within a short period (usually ten minutes). It is provided by generating units that are on-line but unloaded, by quick-start generation, and by customer interrupted load and in accordance with section 3.6 (and Schedule 6) of the *pro forma* tariff.

Other Service Definitions

Other services may be offered to Transmission Customers through Commission-approved revisions to their individual open access tariffs. Examples of other services that may be offered include the Interconnected Operations Services described below in Standards 2.5.7, 2.5.8, and 2.5.9. Ancillary service definitions may be offered pursuant to an individual transmission provider's specific tariff filings.

Standard 2.5.7: Dynamic Transfer (DT)—is the provision of the real-time monitoring, telemetering, computer software, hardware, communications, engineering, and administration required to electronically move all or a portion of the real energy services associated with a generator or load out of its Host Control Area into a different Electronic Control Area.

Standard 2.5.8: Real Power Transmission Losses (TL)—is the provision of capacity and energy to replace energy losses associated with transmission service on the Transmission Provider's system.

Standard 2.5.9: System Black Start Capability (BS)—is the provision of generating equipment that, following a system blackout, is able to start without an outside electrical supply. Furthermore, Black Start Capability is capable of being synchronized to the transmission system such that it can provide a startup supply source for other system capacity that can then be likewise synchronized to the transmission system to supply load as part of a process of re-energizing the transmission system.

Section 3—OASIS Registration Procedures

Section 3.1 Entity Registration

Operation of OASIS requires unambiguous identification of parties.

Standard 3.1: All entities or persons using OASIS shall register the identity of their organization (including DUNS number) or person at the OASIS Home Page at www.tsin.com. Registration identification shall include the parent entity (if any) of the registrant. Registration shall be a prerequisite to OASIS usage and renewed annually and whenever changes in identification occur and thereafter. An entity or person not complying with this requirement may be denied access by a transmission provider to that transmission provider's OASIS node.

The registration requirement applies to any entity logging onto OASIS for the purpose of using or updating information, including Transmission Providers, Transmission Customers, Observers, Control Areas, Security Coordinators, and Independent System Operators.

Section 3.2 Process To Register Non-Standard Service Attribute Values

Section 2 of the OASIS business practice standards addresses the use of standard terminology in defining services on OASIS. These standard definitions for service attribute values will be posted publicly on the OASIS Home Page at www.tsin.com and may be used by all Transmission Providers to offer transmission and ancillary services on OASIS. If the Transmission Provider determines that the standard definitions are not applicable, the Transmission Provider may register new attribute values and definitions on the OASIS Home Page. Any Transmission Provider may use the attribute values and definitions posted by another Transmission Provider.

Standard 3.2: Providers of transmission and ancillary services shall use only attribute values and definitions that have been registered on the OASIS Home Page at www.tsin.com for all transmission and ancillary services offered on their OASIS.

Standard 3.3: Providers of transmission and ancillary services should endeavor to use on their OASIS nodes attribute values and definitions that have been posted by other Transmission Providers on the OASIS Home Page at www.tsin.com whenever possible.

Section 3.3 Registration of Points of Receipt and Delivery

In order to improve coordination of path naming and to enhance the identification of commercially available connection points between Transmission Providers and regions, the business practice for Phase IA OASIS requires that:

- Transmission Providers register at the OASIS Home Page at www.tsin.com, all service points (Points of Receipt and Delivery) for which transmission service is available over the OASIS.
- Each Transmission Provider would then indicate on its OASIS node, for each Path posted on its OASIS node, the Points of Receipt and Delivery to which each Path is connected.

A Transmission Provider is not required to register specific generating stations as Points of Receipt, unless they were available as service points for the purposes of reserving transmission service on OASIS. The requirement also does not include registration of regional flowgates, unless they are service points for the purposes of reserving transmission on OASIS.

Standard 3.4: A Transmission Provider shall register and thereafter maintain on the OASIS Home Page at www.tsin.com all Points of Receipt and Delivery to and from which a Transmission Customer may reserve and schedule transmission service.

Standard 3.5: For each reservable Path posted on their OASIS nodes, Transmission Providers shall indicate the available Point(s) of Receipt and Delivery for that Path. These Points of Receipt and Delivery shall be from the list registered on the OASIS Home Page at www.tsin.com.

Standard 3.6: When two or more Transmission Providers share common Points of Receipt or Delivery, or when a Path connects Points of Receipt and Delivery in neighboring systems, the Transmission Providers owning and/or operating those facilities should apply consistent names for those connecting paths or common paths on the OASIS.

Section 4—On-line Negotiation and Confirmation Process

Section 4.1 On-line Price Negotiation in Short-term Markets

Standard 4.1: Consistent with FERC policy and regulations, all reservations and price negotiations should be conducted on OASIS.

Standard 4.2: Reserved.

Standard 4.3: Reserved.

Section 4.2 Phase IA Negotiation Process State Transition Diagram

The Phase IA S&CP Document provides a process state diagram to define the Customer and Transmission Provider interactions for negotiating transmission service. This diagram defines allowable steps in the reservation request, negotiation, approval and confirmation.

Standard 4.4: The state diagram appearing in Exhibit 4–1 in Section 4.2.10.2 of the Version 1.3 of the S&CP Document constitutes a recommended business practice in OASIS Phase IA.

Standard 4.5: The definitions in Section 4.2.10.2 of the Version 1.3 of the S&CP Document (status values) should be applied to the process states in OASIS Phase IA.

Table 4–1 " Reserved.

Section 4.3 Negotiations—Without Competing Bids

The following practices are defined in order to enhance consistency of the reservation process across OASIS Phase IA nodes.

Standard 4.6: A Transmission Provider/Seller shall respond to a Customer's service request, consistent with filed tariffs, within the ''Provider Response Time Limit'' defined in Table 4–2 ''Reservation Timing Requirements.'' The time limit is measured from the time the request is QUEUED. A Transmission Provider may respond by setting the state of the reservation request to one of the following:

- INVALID
- DECLINED
- REFUSED
- COUNTEROFFER
- ACCEPTED
- STUDY (when the tariff allows), leading to REFUSED, COUNTEROFFER, or ACCEPTED.

Standard 4.7: Prior to setting a request to ACCEPTED, COUNTEROFFER, or REFUSED a Transmission Provider shall evaluate the appropriate resources and ascertain that the requested transfer capability is (or is not) available.

Standard 4.8: For any request that is REFUSED or INVALID, the Transmission Provider must indicate in the STATUS COMMENT field of the TRANSSTATUS template the reason the request was refused or invalid.

Standard 4.9: The Customer may change a request from QUEUED, RECEIVED, STUDY, COUNTEROFFER, REBID, or ACCEPTED to WITHDRAWN at any time prior to CONFIRMED.

Standard 4.10: From ACCEPTED or COUNTEROFFER, a Customer may change the status to CONFIRMED or WITHDRAWN. In addition, a Customer may change the status from COUNTEROFFER to REBID. The Customer has the amount of time designated as ''Customer Confirmation Time Limit'' in Table 4–2 ''Reservation Timing Requirements'' to change the state of the request to CONFIRMED. The Customer time limit is measured from the first time the request is moved to ACCEPTED or COUNTEROFFER, and is not reset with subsequent iterations of negotiation.

Standard 4.11: After expiration of the ''Customer Confirmation Time Limit,'' specified in Table 4–2 ''Reservation Timing Requirements,'' the Transmission Provider has a right to move the request to the RETRACTED state.

Standard 4.12: Should the Customer elect to respond to a Transmission Provider's COUNTEROFFER by moving a reservation request to REBID, the Transmission Provider shall respond by taking the request to a DECLINED, ACCEPTED, or COUNTEROFFER state within the ''Provider Counter Time Limit,'' specified in Table 4–2 ''Reservation Timing Requirements.'' The Transmission Provider response time is measured from the most recent REBID time.

Standard 4.13: The following timing requirements should apply to all reservation requests:

TABLE 4–2.—RESERVATION TIMING REQUIREMENTS

Class	Service increment	Time QUEUED prior to start	Provider evaluation time limit [1]	Customer confirmation time limit [2] after ACCEPTED or COUNTEROFFER [3]	Provider counter time limit after REBID [4]
Non-Firm	Hourly	<1 hour	Best effort	5 minutes	5 minutes.
Non-Firm	Hourly	>1 hour	30 minutes	5 minutes	5 minutes.
Non-Firm	Hourly	Day ahead	30 minutes	30 minutes	10 minutes.
Non-Firm	Daily	N/A	30 minutes	2 hours	10 minutes.
Non-Firm	Weekly	N/A	4 hours	24 hours	4 hours.
Non-Firm	Monthly	N/A	2 days [5]	24 hours	4 hours.
Firm	Daily	24 hours	Best effort	2 hours	30 minutes.
Firm	Daily	N/A	30 days [6]	24 hours	4 hours.
Firm	Weekly	N/A	30 days [6]	48 hours	4 hours.
Firm	Monthly	N/A	30 days [6]	4 days	4 hours.
Firm	Yearly	≥60 days [7]	30 days	15 days	4 hours.

Notes for Table 4–2:

[1] Consistent with regulations and filed tariffs, measurement starts at the time the request is QUEUED.

[2] Confirmation time limits are not to be interpreted to extend scheduling deadlines or to override preexemption deadlines.

[3] Measurement starts at the time the request is first moved to either ACCEPTED or COUNTEROFFER. The time limit does not reset on subsequent changes of state.

[4] Measurement starts at the time the Transmission Customer changes the state to REBID. The measurement resets each time the request is changed to REBID.

[5] Days are defined as calendar days.

[6] Subject to expedited time requirements of Section 17.1 of the *pro forma* tariff. Transmission Providers should make best efforts to respond within 72 hours, or prior to the scheduling deadline, whichever is earlier, to a request for Daily Firm Service received during period 2–30 days ahead of the service start time.

[7] Subject to Section 17.1 of the *pro forma tariff,* whenever feasible and on a non-discriminatory basis, transmission providers should accommodate requests made with less than 60 days notice.

Section 4.4 Negotiations—With Competing Bids for Constrained Resources

Competing bids exist when multiple requests cannot be accommodated due to a lack of available transmission capacity. One general rule is that OASIS requests should be evaluated and granted priority on a first-come-first-served basis established by OASIS QUEUED time. Thus, the first to request service should get it, all else being equal.

Exceptions to this first-come-first-served basis occur when there are competing requests for limited resources and the requests have different priorities established by FERC regulations and filed tariffs. Prior to the introduction of price negotiations, the attribute values that have served as a basis for determining priority include:

- Type (Network, Point-to-point)
- Class (Firm, Non-Firm)
- Increment (Hourly, Daily, Weekly, Monthly, Yearly)
- Duration (the amount of time between the Start Date and the Stop Date)
- Amount (the MW amount)

Under a negotiation model, price can also be used as an attribute for determining priority. The negotiation process increases the possibility that a Transmission Provider will be evaluating multiple requests that cannot all be accommodated due to limited resources. In this scenario, it is possible that an unconfirmed request with an earlier QUEUED time could be preempted (SUPERSEDED). For this to occur, the subsequent request would be of higher priority or of greater price.

Standard 4.14: Consistent with regulations and filed tariffs, the following are recommended relative priorities of Service Request Tiers. Specific exceptions may exist in accordance with filed tariffs. The priorities

refer only to negotiation of service and do not refer to curtailment priority.

4.4.1. Service Request Tier 1: Native load, Network, or Long-term Firm

4.4.2. Service Request Tier 2: Short-term Firm

4.4.3. Service Request Tier 3: Network Service From Non-designated Resources

4.4.4. Service Request Tier 4: Non-firm

4.4.5. Service Request Tier 5: Non-firm Point-to-point Service over secondary receipt and delivery points

Standard 4.15: Consistent with regulations and filed tariffs, reservation requests should be handled in a first-come-first-served order based on QUEUE TIME.

Standard 4.16: Consistent with regulations and filed tariffs, Table 4–3 describes the relative priorities of competing service requests and rules for offering right-of-first-refusal. While the table indicates the relative priorities of two competing requests, it also is intended to be applied in the more general case of more than two competing requests.

TABLE 4–3.—PRIORITIES FOR COMPETING RESERVATION REQUESTS

[Note: The term Tier is introduced to avoid confusion with existing terms such as TS CLASS.]

Row	Request 1	Is preempted by request 2	Right of first refusal
1	Tier 1: Long-term Firm, Native Load, and Network Firm.	N/A—Not preempted by a subsequent request	N/A
2	Tier 2: Short-term Firm	Tier 1: Long-term Firm, Native Load, and Network Firm, while Request 1 is conditional. Once Request 1 is unconditional, it may not be preempted.	No.
3	Tier 2: Short-term Firm	Tier 2: Short-term Firm of longer term (duration), while Request 1 is conditional. Once Request 1 is unconditional, it may not be preempted [1].	Yes, while Request 1 is conditional. Once Request 1 is unconditional, it may not be preempted and right of first refusal is not applicable.
4	Tier 3: Network Service From Non-Designated Resources.	Tiers 1 and 2: All Firm (including Network)	No.
5	Tier 4: All Non-Firm PTP	Tiers 1 and 2: All Firm (including Network)	No.
6	Tier 4: All Non-Firm PTP	Tier 3: Network Service from Non-Designated Resources	No.
7	Tier 4: All Non-Firm PTP	Tier 4: Non-firm PTP of a longer term (duration).[1] Except in the last hour prior to start (*See* Standard 4.23).	Yes.[2]
8	Tier 4: All Non-Firm PTP	Tier 4: Non-firm PTP of equal term (duration) [1] and higher price, when Request 1 is still unconfirmed and Request 2 is received pre-confirmed. A confirmed non-firm PTP may not be preempted for another non-firm request of equal duration. (*See* Standards 4.22 and 4.25.).	Yes.
9	Tier 5: Non-firm PTP Service over secondary receipt and delivery points.	Tier 5 can be preempted by Tiers 1 through 4	No.

[1] Longer duration, in addition to being higher SERVICE INCREMENT (*i.e.*, WEEKLY has priority over DAILY), also may mean more multiples of the same SERVICE INCREMENT (*i.e.*, 3 days may have priority over 2 days). Multiple service increments must be at the same level of capacity.

[2] Right of first refusal applies only to confirmed requests.

Standard 4.17: For a reservation request that is preempted, the Transmission Provider must indicate the Assignment Reference Number of the reservation that preempted the reservation request in the Seller Comment field of the preempted request.

Standard 4.18: Given competing requests for a limited resource and a right-of-first-refusal is not required to be offered, the Transmission Provider may immediately move requests in the CONFIRMED state to DISPLACED, or from an ACCEPTED or COUNTEROFFER state to SUPERSEDED, if the competing request is of higher priority, based on the rules represented in Table 4–3. These state changes require dynamic notification to the Customer if the Customer has requested dynamic notification on OASIS.

Standard 4.19: In those cases where right-of-first-refusal is required to be offered, the Transmission Provider shall notify the Customer, through the use of a COUNTEROFFER, of the opportunity to match the subsequent offer.

Standard 4.20: A Customer who has been extended a right-of-first-refusal should have a confirmation time limit equal to the lesser of (a) the Customer Confirmation Time Limit in Table 4–2 or (b) 24 hours.

Standard 4.21: A Transmission Provider shall apply all rights-of-first-refusal in a non-discriminatory and open manner for all Customers.

Standard 4.22: Once a non-firm PTP request has been confirmed, it shall not be displaced by a subsequent non-firm PTP request of equal duration and higher price.

Standard 4.23: A confirmed, non-firm PTP reservation for the next hour shall not be displaced within one hour of the start of the reservation by a subsequent non-firm PTP reservation request of longer duration.

Standard 4.24: A Transmission Provider should accept any reservation request submitted for an unconstrained Path if the Customer's bid price is equal to or greater than the Transmission Provider's posted offer price at the time the request was queued, even if later requests are submitted at a higher price. This standard applies even when the first request is still unconfirmed, unless the Customer Confirmation Time Limit has expired for the first request.

Standard 4.25: Once an offer to provide non-firm PTP transmission service at a given price is extended to a Customer by the Transmission Provider, and while this first request is still unconfirmed but within the Customer Confirmation Time Limit, the Transmission Provider should not preempt or otherwise alter the status of that first request on receipt of a subsequent request of the same Tier and equal duration at a higher price, unless the subsequent request is submitted as pre-confirmed.

Standard 4.26: If during a negotiation of service (*i.e.*, prior to Customer confirmation) a subsequent pre-confirmed request for service over the same limited resource of equal duration but higher price is received, the Transmission Provider *must* COUNTEROFFER the price of service on the prior COUNTEROFFER or ACCEPTED price to match the competing offer, in order to give the first Customer an opportunity to match the offer. This practice must be implemented in a non-discriminatory manner.

Section 5—Procurement of Ancillary and Other Services

Section 5.1 Introduction

Phase IA OASIS data templates allow the coupling of ancillary service arrangements with the purchase of transmission service for the purpose of simplifying the overall process for Customers. Transmission Providers must indicate (consistent with filed tariffs), which services are MANDATORY (must be taken from the Primary Transmission Provider), REQUIRED (must be provided for but may be procured from alternative sources), or OPTIONAL (not required as a condition of transmission service).

The Transmission Customer should make known to the Transmission Provider at the time of the reservation request certain options related to arrangement of ancillary services. The Transmission Customer may indicate:

- I will take all the MANDATORY and REQUIRED ancillary services from the Primary Transmission Provider.
- I will take REQUIRED ancillary services from Third Party Seller ''X''.
- I would like to purchase OPTIONAL services.
- I will self provide ancillary services.
- I will arrange for ancillary services in the future (prior to scheduling).

While these interactions are available in the Phase IA S&CP Document, there is a need to clarify the associated business practices. The standards in Section 5 apply to services defined in filed tariffs.

Section 5.2 Transmission Provider Requirements

Standard 5.1: The Transmission Provider shall designate which ancillary services are MANDATORY, REQUIRED, or OPTIONAL for each offered transmission service or each transmission path to the extent these requirements can be determined in advance of the submittal of a reservation request on a specific Path by a Transmission Customer.

Standard 5.2: A Transmission Provider shall modify a Transmission Customer's service request to indicate the Transmission Provider as the SELLER of any ancillary service, which is MANDATORY, to be taken from the Transmission Provider.

Standard 5.3: For REQUIRED and OPTIONAL services, the Transmission Provider shall *not* select a SELLER of ancillary service without the Transmission Customer first selecting that SELLER.

Standard 5.4: A Transmission Provider may accept a Transmission Customer's request for an ancillary service, which is not MANDATORY or REQUIRED, but shall indicate to the Transmission Customer at the time of acceptance under PROVIDER COMMENTS that the service is not MANDATORY or REQUIRED.

Section 5.3 Transmission Customer Requirements

Standard 5.5: The Transmission Customer should indicate with the submittal of a transmission reservation request, the preferred options for provision of ancillary services, such as the desire to use an alternative resource. The Transmission Provider shall post itself as the default ancillary service provider, if a Transmission Customer fails to indicate a third party SELLER of ancillary services. However, the Transmission Customer may change this designation at a later date, so long as this change is made prior to the Transmission Provider's scheduling deadline.

Standard 5.6: A Transmission Customer may, but is not required to, indicate a third party SELLER of ancillary services, if these services are arranged by the Transmission Customer off the OASIS and if such arrangements are permitted by the Transmission Provider's tariff. The Transmission Provider shall post itself as the default ancillary service provider, if a Transmission Customer fails to indicate a third party SELLER of ancillary services. However, the Transmission Customer may change this designation at a later date, so long as this change is made prior to the Transmission Provider's scheduling deadline.

Section 6—Pathnaming Standards

Section 6.1 Introduction

The Data Element Dictionary of the OASIS S&CP Document, Version 1.3, defines a path name in terms of a 50-character alphanumeric string:

RR/TPTP/PATHPATHPATH/
OPTIONALFROM-OPTIONALTOTO/
SPR

RegionCode/
TransmissionProviderCode/PathName/
OptionalFrom-To(POR-POD)/Spare

This definition leaves it to the Transmission Providers to name the paths from their own perspective. The following standards provide an unambiguous convention for naming paths and will produce more consistent path names.

Section 6.2 Transmission Provider Requirements

Standard 6.1: A transmission provider shall use the path naming convention defined in the S&CP Data Dictionary for the naming of all reservable paths posted on OASIS.

Standard 6.2: A transmission provider shall use the third field in the path name to indicate the sending and receiving control areas. The control areas shall be designated using standard NERC codes for the control areas, separated by a hyphen. For example, the first three fields of the path name will be:

RR/TPTP/CAXX–CAYY/

Standard 6.3: A transmission provider shall use the fourth field of the path name to indicate POR and POD separated by a hyphen. For example, a path with a specific POR/POD would be shown as:

RR/TPTP/CAXX–CAYY/PORPORPORPOR-PODPODPODPOD/

If the POR and POD are designated as control areas, then the fourth field may be left blank (as per the example in 6.2).

Standard 6.4: A transmission provider may designate a sub-level for Points of Receipt and Delivery. For example, a customer reserves a path to POD AAAA. The ultimate load may be indeterminate at the time. Later, the customer schedules energy to flow to a particular load that may be designated by the transmission provider as a sub-level Point of Delivery. This option is necessary to ensure certain transmission providers are not precluded from using more specific service points by the inclusion of the POR/POD in the path name. All sub-level PORs and PODs must be registered as such on www.tsin.com.

[**Note:** This attachment will not appear in the Code of Federal Regulations.]

Sections 13.2, 14.2, 14.7, and 17.5 of the *pro forma* tariff provide as follows:

13.2 Reservation Priority: Long-Term Firm Point-To-Point Transmission Service shall be available on a first-come, first-served basis i.e., in the chronological sequence in which each Transmission Customer has reserved service. Reservations for Short-Term Firm Point-To-Point Transmission Service will be conditional based upon the length of the requested transaction. If the Transmission System becomes oversubscribed, requests for longer term service may preempt requests for shorter term service up to the following deadlines; one day before the commencement of daily service, one week before the commencement of weekly service, and one month before the commencement of monthly service. Before the conditional reservation deadline, if available transmission capability is insufficient to satisfy all Applications, an Eligible Customer with a reservation for shorter term service has the right of first refusal to match any longer term reservation before losing its reservation priority. A longer term competing request for Short-Term Firm Point-To-Point Transmission Service will be granted if the Eligible Customer with the right of first refusal does not agree to match the competing request within 24 hours (or earlier if necessary to comply with the scheduling deadlines provided in section 13.8) from being notified by the Transmission Provider of a longer-term competing request for Short-Term Firm Point-To-Point Transmission Service. After the conditional reservation deadline, service will commence pursuant to the terms of Part II of the Tariff. Firm Point-To-Point Transmission Service will always have a reservation priority over Non-Firm Point-To-Point Transmission Service under the Tariff. All Long-Term Firm Point-To-Point Transmission Service will have equal reservation priority with Native Load Customers and Network Customers. Reservation priorities for existing firm service customers are provided in Section 2.2.

14.2 Reservation Priority: Non-Firm Point-To-Point Transmission Service shall be

available from transmission capability in excess of that needed for reliable service to Native Load Customers, Network Customers and other Transmission Customers taking Long-Term and Short-Term Firm Point-To-Point Transmission Service. A higher priority will be assigned to reservations with a longer duration of service. In the event the Transmission System is constrained, competing requests of equal duration will be prioritized based on the highest price offered by the Eligible Customer for the Transmission Service. Eligible Customers that have already reserved shorter term service have the right of first refusal to match any longer term reservation before being preempted. A longer-term competing request for Non-Firm Point-To-Point Transmission Service will be granted if the Eligible Customer with the right of first refusal does not agree to match the competing request: (a) immediately for hourly Non-Firm Point-To-Point Transmission Service after notification by the Transmission Provider; and, (b) within 24 hours (or earlier if necessary to comply with the scheduling deadlines provided in section 14.6) for Non-Firm Point-To-Point Transmission Service other than hourly transactions after notification by the Transmission Provider. Transmission service for Network Customers from resources other than designated Network Resources will have a higher priority than any Non-Firm Point-To-Point Transmission Service. Non-Firm Point-To-Point Transmission Service over secondary Point(s) of Receipt and Point(s) of Delivery will have the lowest reservation priority under the Tariff.

14.7 Curtailment or Interruption of Service: The Transmission Provider reserves the right to Curtail, in whole or in part, Non-Firm Point-To-Point Transmission Service provided under the Tariff for reliability reasons when, an emergency or other unforeseen condition threatens to impair or degrade the reliability of its Transmission System. The Transmission Provider reserves the right to Interrupt, in whole or in part, Non-Firm Point-To-Point Transmission Service provided under the Tariff for economic reasons in order to accommodate (1) a request for Firm Transmission Service, (2) a request for Non-Firm Point-To-Point Transmission Service of greater duration, (3) a request for Non-Firm Point-To-Point Transmission Service of equal duration with a higher price, or (4) transmission service for Network Customers from non-designated resources. The Transmission Provider also will discontinue or reduce service to the Transmission Customer to the extent that deliveries for transmission are discontinued or reduced at the Point(s) of Receipt. Where required, Curtailments or Interruptions will be made on a non-discriminatory basis to the transaction(s) that effectively relieve the constraint, however, Non-Firm Point-To-Point Transmission Service shall be subordinate to Firm Transmission Service. If multiple transactions require Curtailment or Interruption, to the extent practicable and consistent with Good Utility Practice, Curtailments or Interruptions will be made to transactions of the shortest term (*e.g.,*hourly non-firm transactions will be Curtailed or Interrupted before daily non-firm transactions and daily non-firm transactions will be Curtailed or Interrupted before weekly non-firm transactions). Transmission service for Network Customers from resources other than designated Network Resources will have a higher priority than any Non-Firm Point-To-Point Transmission Service under the Tariff. Non-Firm Point-To-Point Transmission Service over secondary Point(s) of Receipt and Point(s) of Delivery will have a lower priority than any Non-Firm Point-to-Point Transmission Service under the Tariff. the Transmission Provider will provide advance notice of Curtailment or Interruption where such notice can be provided consistent with Good utility Practice.

17.5 Response to a Completed Application: Following receipt of a Completed Application for Firm Point-To-Point Transmission Service, the Transmission Provider shall make a determination of available transmission capability as required in Section 15.2. the Transmission Provider shall notify the Eligible customer as soon as practicable, but not later than thirty (30) days after the date of receipt of a Completed Application either (i) if it will be able to provide service without performing a System Impact Study or (ii) if such a study is needed to evaluate the impact of the application pursuant to Section 19.1. Responses by the Transmission Provider must be made as soon as practicable to all completed application (including applications by its own merchant function) and the timing of such responses must be made on a non-discriminatory basis.

[Note: This attachment will not appear in the Code of Federal Regulations.]

Attachment C

Section 4.2.10.2 of the S&CP Document is revised to provide as follows:

4.2.10.2 Status Values

The possible STATUS values are:

QUEUED=initial status assigned by TSIP on receipt of ''customer services purchase request.''

INVALID=assigned by TSIP or Provider indicating an invalid field in the request, such as improper POR, POD, source, sink, etc. (Final state).

RECEIVED=assigned by Provider or Seller to acknowledge QUEUED requests and indicate the service request is being evaluated, including for completing the required ancillary services.

STUDY=assigned by Provider or Seller to indicate some level of study is required or being performed to evaluate service request.

REFUSED=assigned by Provider or Seller to indicate service request has been denied due to lack of availability of transmission capability. SELLER COMMENTS should be used to communicate details for denial of service. (Final state).

COUNTEROFFER=assigned by Provider or Seller to indicate that a new OFFER PRICE is being proposed.

REBID=assigned by Customer to indicate that a new BID PRICE is being proposed.

SUPERSEDED=assigned by Provider or Seller when a request which has not yet been confirmed is preempted by another reservation request. (Final state).

ACCEPTED=assigned by Provider or Seller to indicate the service request at the designated OFFER PRICE has been approved/accepted. If the reservation request was submitted PRECONFIRMED, the OASIS Node shall immediately set the reservation status to CONFIRMED. Depending upon the type of ancillary services required, the Seller may or may not require all ancillary service reservations to be completed before accepting a request.

DECLINED=assigned by Provider or Seller to indicate that the BID_PRICE is unacceptable and that negotiations are terminated. SELLER COMMENTS should be used to communicate reason for denial of service. (Final state).

CONFIRMED=assigned by Customer in response to Provider or Seller posting ''ACCEPTED'' status, to confirm service. Once a request has been ''CONFIRMED,'' a transmission service reservation exists. (Final state, unless overridden by DISPLACED or ANNULLED state).

WITHDRAWN=assigned by Customer at any point in request evaluation to withdraw the request from any further action. (Final state).

DISPLACED=assigned by Provider or Seller when a ''CONFIRMED'' reservation from a Customer is replaced by a longer term reservation and the Customer has not exercised right of first refusal, if any (*i.e.,* refused to match terms of new request). (Final state).

ANNULLED=assigned by Provider or Seller when, by mutual agreement with the Customer, a confirmed reservation is to be voided. (Final state).

RETRACTED=assigned by Provider or Seller when the Customer fails to confirm or withdraw the request within the required time period. (Final state).

[Note: This attachment will not appear in the Code of Federal Regulations.]

Attachment D.—Data Element Dictionary

Data dictionary element name	Alias	Field format: minimum characters {type of ASCII} maximum characters	Restricted values	Definition of data element
AFFILIATE_FLAG	AFFLAG	{ALPHANUMERIC}3	Valid Values YES NO	Set to YES if customer is an affiliate of the provider
ANC_SVC_LINK	ANCSVCLINK	0{ ALPHANUMERIC} 300	Formatted string as follows: SC:(AA); RV: (AA); RF: (AA[:xxx[:yyy[:nnn]]]); EI: (AA[:xxx[:yyy[:nnn]]]); SP: (AA[:xxx[:yyy[:nnn]]]); SU: (AA[:xxx[:yyy[:nnn]]]); {Registered}: (AA[:xxx[:yyy[:nnn]]])	The method for linking ancillary services to a transmission service request. The provider and capacity of each ancillary service is identified using the formatted string: SC:(AA); RV: (AA); RF: (AA[:xxx[:yyy[:nnn]]]); EI: (AA[:xxx[:yyy[:nnn]]]); SP: (AA[:xxx[:yyy[:nnn]]]); SU: (AA[:xxx[:yyy[:nnn]]]); {Registered}:(AA[:xxx[:yyy[:nnn]]]) where AA is the appropriate PRIMARY_PROVIDER_CODE, SELLER_CODE, or CUSTOMER_CODE, and represents the company providing the ancillary services. "AA" may be unspecified for "xxx" type identical to "FT", in which case the ":" character must be present and precede the "FT" type. If multiple "AA" terms are necessary, then each "AA" grouping will be enclosed within parenthesis, with the overall group subordinate to the ANC_SVC_TYPE specified within parenthesis. and where xxx represents either: —"FT" to indicate that the Customer will determine ancillary services at a future time, or —"SP" to indicate that the Customer will self-provide the ancillary services, or —"RQ" to indicate that the Customer is asking the OASIS Node to initiate the process for making an ancillary services reservation with the indicated Provider or Seller on behalf of the Customer. The Customer must then continue the reservation process with the Provider or Seller. If the transmission services request is for preconfirmed service, then the ancillary services shall also be preconfirmed, or —"AR" to indicate an assignment reference number sequence follows. The terms "yyy" and "nnn" are subordinate to the xxx type of "AR". yyy represents the ancillary services reservation number (ASSIGNMENT_REF) and nnn represents the capacity of the reserved ancillary services. Square brackets are used to indicated optional elements and are not used in the actual linkage itself. Specifically, the :yyy is applicable to only the "AR" term and the :nnn may optionally be left off if the capacity of ancillary services is the same as for the transmission services, and optionally multiple ancillary reservations may be indicated by additional (xxx[:yyy[:nnn]]) enclosed within parenthesis. If no capacity amount is indicated, the required capacity is assumed to come from the ancillary reservations in the order indicated in the codes, on an "as-needed" basis.
ANC_SVC_REQ	ANCSVCREQ	0{ALPHANUMERIC} 100	EI:{M,R,O,U}; SP:{M,R,O,U}; SU:{M,R,O,U}; RV:{M,R,O,U}; RF:{M,R,O,U}; SC:{M,R,O,U}; {registered}:{M,R,O,U} • (R) Required, which implies that the ancillary service is required, but not necessarily from the Primary Provider. • (O) Optional, which implies that the ancillary service is not necessarily required, but could be provided. • (U) Unknown, which implies that the requirements for the ancillary service are not known at this time.	Ancillary services required for a transmission services offering. The appropriate letter {M,R,O,U} will be assigned to each of the six Proforma Ferc ancillary services (see AS_TYPE), where the letters mean the following: • (M) Mandatory, which implies that the Primary Provider must provide the ancillary service.
AS TYPE	ASTYPE	1{ALPHANUMERIC}20	Valid types • EI • SP • SU • RV • RF • SC • {Registered}	 EI—Energy Imbalance. SP—Spinning Reserve. SU—Supplemental Reserve. RV—Reactive supply and Voltage Control. RF—Regulation and Frequency response. SC—Scheduling, system Control and Dispatch. {Registered} must be registered with www.tsin.com and listed in the ANCSERV template.
ASSIGNMENT REF	AREF	1{ALPHANUMERIC}12	Unique value	A unique reference number assigned by a Transmission Information Provider to provide a unique record for each transmission or ancillary service request. A single transmission or ancillary service request will be over a contiguous time period, i.e. from a START_TIME to a STOP_TIME.
BID PRICE	BIDPR	1{NUMERIC}5 + "." + 2{NUMERIC}2	Positive number with 2 decimals	The current bid price of a Service in dollars and cents. Used by Customers to designate a price being bid.

Data dictionary element name	Alias	Field format: minimum characters {type of ASCII} maximum characters	Restricted values	Definition of data element
CAPACITY	CAP	1{NUMERIC}12	Non-negative number in units of MW.	Transfer capability is the measure of the ability of the interconnected electric system to readily move or transfer power from one area to another over all transmission lines (or paths) between those areas under specified system conditions. In this context ''area'' may be an individual electric system, powerpool, control area, subregion, or NERC region or portion thereof.
CAPACITY_CURTAILED	CAPCUR	1{NUMERIC}12	Non-negative number in units of MW	The amount of transfer capability curtailed by the Primary provider for emergency reasons.
CAPACITY_SCHEDULED	CAPSCH	0{ NUMERIC}12	Non-negative number in units of MW	Transfer capability scheduled on each path.
CATEGORY	CAT	0{ALPHANUMERIC}25	Valid name from CATEGORY in LIST Template	A name to be used to categorize messages. Valid names would include: , Want-Ad, Curtailment, Outage, Oasis Maint Notice.
CEILING_PRICE	CEILPR	1{NUMERIC}5 + ".'' +; 2{NUMERIC}2	Positive number with 2 decimals	Ceiling price of the Service as entered by the Transmission Provider.
COLUMN_HEADERS	HEADERS	1{ALPHANUMERIC }Limited to all the elements names in one Template	Headers surrounded with A and separated by commas. Limited to valid Template element names. Must use full element name and not alias	Example: COLUMN_HEADER=APATH_NAME",'' POINT_OF_RECEIPT",'' POINT_OF_DELIVERY'','' SOURCE",''SINK".
CONTINUATION_FLAG	CONT	1{ALPHANUMERIC}1	"Y" or "N''	Indicates whether or not this record is a continuation from the previous record.
CONTROL_AREA	AREA	1{ALPHANUMERIC}20	Valid name of a control area	A part of the power system with metered tie lines and capable of matching generation and load while meeting scheduled interchange. Location of Ancillary Services is my CONTROL_AREA.
CURTAILMENT_OPTIONS	CUROPT	0{ALPHANUMERIC}80	Free form text	Customer options, if any, to avoid curtailment.
CURTAILMENT_PROCEDURES	CURPROC	0{ALPHANUMERIC}80	Free form text	Curtailment procedures to be followed in the event of a curtailment.
CURTAILMENT_REASON	CURREAS	0{ALPHANUMERIC}80	Free-form text	Reason for curtailment of service.
CUSTOMER_CODE	CUST	1{ALPHANUMERIC}6	Unique value, registered on TSIN.COM	Any entity (or its designated agent) that is eligible to view OASIS information, to execute a service agreement, and/or to receive transmission service.
CUSTOMER_COMMENTS	CUSTCOM	0{ALPHANUMERIC} 80	Free-form text	Informative text.
CUSTOMER_DUNS	CUSTDUNS	9{NUMERIC}9	Unique DUNS number	Unique DUNS number for a Customer.
CUSTOMER_EMAIL	CUSTEMAIL	1{ALPHANUMERIC}25	Valid Internet E-Mail address	Internet E-Mail address of Customer contact person.
CUSTOMER_FAX	CUSTFAX	14{ALPHANUMERIC}20	Area code and telephone number, plus any extensions (aaa)-nnn-nnnn xnnnn	FAX phone number of Customer contact person.
CUSTOMER_NAME	CUSTNAME	1{ALPHANUMERIC}25	Free form text	Name of Customer contact person.
CUSTOMER_PHONE	CUSTPHON	14{ ALPHANUMERIC}20	Area code and telephone number, plus any extensions (aaa)-nnn-nnnn xnnnn	Telephone of Customer contact person.
DATA_ROWS	ROWS	1{NUMERIC} unlimited	Positive Number	Number of records (rows) of data exclusive of header information that are to be uploaded or downloaded in a file.
DATE_TIME_EFFECTIVE	TIMEEFCT	16{ALPHANUMERIC}16	Valid date and time in seconds: yyyy+mo+dd+hh +mm+ss+tz	Date and time a message or service offer is in effect.
DEAL_REF	DREF	0{ALPHANUMERIC}12	Unique value, Assigned by Customer	The unique reference assigned by a Customer to two or more service purchases to identify each of them as related to others in the same power service deal. These requests may be related to each other in time sequence through a single Provider, or as a series of wheels through multiple Providers, or a combination of both time and wheels. The User uses the DEAL_REF to uniquely identify a combination of requests relating to a particular deal.
DESCRETION_DESCRIPTION	DISCDESC	0{ALPHANUMERIC}1000	Free form text	A detailed description of the discretion being reported.
ELEMENT_NAME	ELEMENT	1{ALPHANUMERIC}40	Valid Template element name	Template element name as indicated in data dictionary.
EMPLOYEE_NAME	EMPNAME	1{ALPHANUMERIC}25	Free form text	Name of person who is transferring from one position to another.
ERROR_MESSAGE	ERROR	1{ALPHANUMERIC}250	Free form text	Error message related to a RECORD_STATUS or REQUEST_STATUS.
FORMER_COMPANY	FORMCO	1{ALPHANUMERIC}25	Free form text	Former company of the person who is transferring.
FORMER_DEPARTMENT	FORMDEPT	1{ALPHANUMERIC}25	Free form text	Former department of the person who is transferring.
FORMER_POSITION	FORMPOS	1{ALPHANUMERIC}25	Free form text	Former position held by the person who is transferring.
INTERFACE_TYPE	INTERFACE	0{ALPHANUMERIC}1	I,E	Type of interface define by path: Internal (I) to a control area or External (E) to a control area.
LIST_ITEM	ITEM	1{ALPHANUMERIC}50	Free form text	Item from LIST, such as list of SELLER, list of PATH_NAME, list of POINT_OF_RECEIPT, list of POINT_OF_DELIVERY, list of SERVICE_INCREMENT, list of TS_CLASS, list of TS_TYPE, list of TS_PERIOD, list of TS_WINDOW, list of TS_SUBCLASS, list of AS_TYPE, list of NERC_CURTAILMENT_PRIORITY, list of OTHER_CURTAILMENT_PRIORITY, list of CATEGORY, list of TEMPLATE, list of LIST.
LIST_ITEM_DESCRIPTION	ITEMDESC	0{ALPHANUMERIC}100	Free form text	A detailed description of the LIST_ITEM.
LIST_NAME	LIST	1{ALPHANUMERIC}50	LIST, SELLER, PATH, POR, POD, SERVICE_INCREMENT, TS_CLASS, TS_TYPE, TS_PERIOD, TS_SUBCLASS, AS_TYPE, NERC_CURTAILMENT_PRIORITY, OTHER_CURTAILMENT_PRIORITY, CATEGORY, TEMPLATE	List of valid names for each of the types of lists. The minimum set of lists defined must be implemented.
MESSAGE	MSG	1{ALPHANUMERIC}200	Free form text	An informative text message.
NEGOTIATED_PRICE_FLAG	NGPRIFLG	0{ALPHANUMERIC}1	H, L, or blank	Set to H if OFFER_PRICE is higher than the currently posted price; set to L if OFFER_PRICE is lower than the currently posted price.
NERC_CURTAILMENT_PRIORITY	NERCURT	1{NUMERIC }1	Integer 1–7	One of the NERC seven curtailment priorities, documented in LIST template.
NEW_COMPANY	NEWCO	1{ALPHANUMERIC}25	Free form text	New company of the person who is transferring.
NEW_DATA	NEWDATA	0{ALPHANUMERIC}200	Any valid date element value	For audit log, the new updated value of a Template data element after update.

NEW_DEPARTMENT	NEWDEPT	1{ALPHANUMERIC}25	Free form text.	New department of the person who is transferring.
NEW_POSITION	NEWPOS	1{ALPHANUMERIC}25	Free form text	New position held by the person who is transferring.
OFFER_PRICE	OFFPR	1{NUMERIC}5 + ".'' + 2{NUMERIC}2	Positive number with 2 decimals	The current offered price of a Service in dollars and cents. Used by the Seller to indicate the offering price.
OFFER_START_TIME	OFFSTIME	0,16{ALPHANUMERIC} 16	Valid Date and Time to seconds: yyyy+mo+dd+hh +mm+ss+tz	Start time of the window during which a Customer may request a discounted offer. If null, no restrictions on the start of the offering time is implied (other than tariff requirements).
OFFER_STOP_TIME	OFFSPTIME	0,16{ALPHANUMERIC} 16	Valid Date and Time to seconds: yyyy+mo+dd+hh +mm+ss+tz	Stop time of the window during which a Customer may request a discounted offer. (Expiration time of an offer). If null, no restrictions on the end of the offering time is implied (other than tariff requirements).
OLD_DATA	OLDDATA	0{ALPHANUMERIC}200	Any valid data element value	For audit log, the old value of a Template data element prior to being updated. This element is not applicable in the audit log for transaction events.
OPTIONAL_CODE	N/A	0{ALPHANUMERIC}25	Unique path name within region	OPTIONAL_CODE_25 chars, unique for Path. If used for directionality, then the first 12 characters shall represent POR, followed by >->, followed by 12 characters which shall represent POD. Used by PATH_NAME.
OTHER_CURTAILMENT_PRIORITY	OTHCUR	0{ALPHANUMERIC}8	Free form tect	Other than NERC curtailment priorities, such as regional curtailment priorities. Suggested format region+number, for example MAPP4, WSCC7. Documented in LIST template.
OUTPUT_FORMAT	FMT	4{ALPHANUMERIC}4	HTML, DATA	Format of response: HTML=hypertext markup language for presentation using a web browser. DATA=text for use in a downloaded file.
PATH_CODE	N/A	0{ALPHANUMERIC}12	Unique code for each path as defined by primary provider	Unique code within a Region for each path. Used by PATH NAME.
PATH_NAME	PATH	5{ALPHANUMERIC}50	Unique value	The unique name assigned to a single transmission line or the set of one or more parallel transmission lines whose power transfer capabilities are strongly interrelated and must be determined in aggregate. These lines are typically described as being on a path, corridor or interconnection in some regions, or as crossing an interface or cut-plane in other regions. Multiple lines may be owned by different parties and require prorating of capability shares. The name is constructed from the following codes, with each code separated by a ''/''. Trailing "/'' may be omitted, if there are no values for OPTION CODE and SPARE CODE: REGION CODE—2 chars, unique to OASIS System PRIMARY PROVIDER CODE—4 chars, unique within Region PATH CODE 12 chars, unique for Primary Provider OPTIONAL CODE 25 chars, unique for Path. If used for directionality, then the first 12 characters shall represent POR, followed by >->, followed by 12 characters which shall represent POD SPARE CODE 3 chars.
POINT OF DELIVERY	POD	1{ALPHANUMERIC}12	Unique value within Primary Provider	Point of Delivery is one or more point(s) of interconnection on the Transmission Provider's transmission system where capacity and/or energy transmitted by the Transmission Provider will be made available to the Receiving Party. This is used along with Point of Receipt to define a Path and direction of flow on that path. For internal paths, this would be a specific location(s) in the area. For an external path, this may be an area-to-area interface.
POINT OF RECEIPT	POR	1{ALPHANUMERIC}12	Unique value within Primary Provider	Point of Receipt is one or more point(s) of interconnection on the Transmission Provider's transmission system where capacity and/or energy transmitted will be made available to the Transmission Provider by the Delivering Party. This is used along with Point of Delivery to define a Path and direction of flow on that path. For internal paths, this would be a specific location(s) in the area. For an external path, this may be an area-to-area interface.
POSTING NAME	POSTNAME	1{ALPHANUMERIC}25	Free form text	Name of person who is posting the information on the OASISNode.
POSTING REF	POSTREF	1{ALPHANUMERIC}12	Unique Value	Assigned by TSIP when Service or Message is received by TSIP. Unique number can be used by the user to modify or delete the posting.
PRECONFIRMED	PRECONF	2{ALPHA}3	YES or NO	Used by Customer to preconfirm sale in Template transrequest or ancrequest. If customer indicates sale is preconfirmed, then the response is YES and the customer does not need to confirm the sale.
PRICE UNITS	UNITS	0(ALPHA)20	Free form text	The units used for CEILING PRICE, OFFER PRICE, and BID PRICE. Examples: $/MWhr, $/MWmonth.
PRIMARY PROVIDER COMMENTS	PPROVCOM	0{ALPHANUMERIC}80	Free-form text	Informative text. Usually entered by the Primary Provider through a back end system.
PRIMARY PROVIDER CODE	PROVIDER	1{ALPHANUMERIC}4	Unique code	Unique code for each Primary Provider. Used by PATH NAME and in URL. Registered as part of URL at www.tsin.com.
PRIMARY_PROVIDER_DUNS	PPROVDUNS	9{NUMERIC}9	Valid DUNS number	Unique code for each Primary. Provided by Dun and Bradstreet.
REASSIGNED_CAPACITY	RASCAP	1{NUMERIC}12	Positive number, cannot exceed previous assigned capacity	The amount of transfer capability that was reassigned from one entity to another.
REASSIGNED_REF	REREF	1{ALPHANUMERIC}12	Unique value	When customer makes a purchase of a transmission service that was posted for resale and a new ASSIGNMENT_REF number is issued the previous ASSIGNMENT_REF number now becomes the REASSIGNMENT_REF. Also used by SELLER when posting transmission or ancillary services for resale to show the previous assignment reference number. Also used by the customer when making a request to use FIRM service as SECONDARY over alternate points of delivery.
REASSIGNED_START_TIME	RESSTIME	16ALPHANUMERIC } 16	Valid date and time to seconds: yyyy+mo+dd+hh+tz	Beginning date and time of the reassigned transmission service.
REASSIGNED_STOP_TIME	RESSPTIME	16{ALPHANUMERIC}16	Valid date and time to hour: yyyy+mo+dd+hh+tz	Date and time of the end of the transmission service that is reassigned to another User.

Data dictionary element name	Alias	Field format: minimum characters {type of ASCII} maximum characters	Restricted values	Definition of data element
RECORD_STATUS	RECSTATUS	1{NUMERIC}3	Error number	Record status indicating record was successful or error code if unsuccessful. 200=Successful.
REGION_CODE	N/A	1{ALPHANUMERIC}2	Unique within OASIS System	Defined for NERC regions, with the following defined: E—ECAR, I—MAIN, S—SERC, T—ERCOT, A—MAPP, P—SPP, M—MAAC, N—NPCC, W—WSCC, F—FRCC. Second character or digit reserved for subregion id as defined by each region.
REQUEST_REF	RREF	0{ALPHANUMERIC}12	Unique value	A reference uniquely assigned by a Customer to a request for service from a Provider.
REQUEST_STATUS	RSTATUS	1{NUMERIC}3	Error number	Message status indicating message was successful (if all RECORD_STATUS show success) or error code if any RECORD_STATUS showed unsuccessful. 200 = Successful.
RESPONSE_TIME_LIMIT	RESPTL	16{ALPHANUMERIC}16	Valid date and time to seconds: yyyy+mo+dd+hh+mm+ss+tz	Date and time to seconds by when a response must be received from a Customer.
RESPONSIBLE_PARTY_NAME	PARTNAME	1{ALPHANUMERIC}25	Free form text	The name of the person responsible for granting the discretion.
RETURN_TZ	TZ	2{ALPHANUMERIC}2	AD, AS, PD, PS, ED, ES, MD, MS, CD, CS, UT	A time zone code, indicating the base time zone, and whether daylight saving time is to be used. This field may be set by a Customer in a query. Returned date and time data is converted to this time zone.
SALE_REF	SREF	0{ALPHANUMERIC}12	Unique value	Identifier which is set by seller (including Primary Provider) when posting a service for sale.
SELLER_CODE	SELLER	1{ALPHANUMERIC}6	Unique value	Organization name of Primary Provider or Reseller.
SELLER_COMMENTS	SELCOM	0{ALPHANUMERIC} 80	Free-form text	Informative text provided by the Seller.
SELLER_DUNS	SELDUNS	9{NUMERIC}9	Valid DUNS number	Unique Data Universal Numbering System provided by Dun and Bradstreet. Code for a Primary Provider or Seller.
SELLER_EMAIL	SELEMAIL	5{ALPHANUMERIC}60	Valid network reference	E-Mail address of Seller contact person.
SELLER_FAX	SELFAX	14{ALPHANUMERIC} 20	Area code and telephone number, plus any extensions Example: (aaa)-nnn-nnnn xnnnn	The fax telephone number for contact person at Seller.
SELLER_NAME	SELNAME	1{ALPHANUMERIC} 25	Free form text	The name of an individual contact person at the Seller.
SELLER_PHONE	SELPHONE	14{ALPHANUMERIC}20	Area code and telephone number, plus any extensions (aaa)-nnn-nnnn xnnnn	The telephone number of a contact person as a Seller.
SERVICE_DESCRIPTION	SVCDESC	0{ALPHANUMERIC} 200	Free-form text	Information regarding a service.
SERVICE_INCREMENT	SRVINCR	1{ALPHANUMERIC}8	Valid increments • HOURLY • Daily • Weekly • Monthly • Yearly • {Registered}	The transmission service increments provided. Five are pre-defined, while additional increments can be used if they are registered on TSIN.COM and shown in the Provider's LIST template.
SERVICE_NAME	SVCNAME	1{ALPHANUMERIC} 25	Free-form text	Name of service affected by the discretionary action.
SERVICE_TYPE	SVCTYPE	1{ALPHANUMERIC} 25	Free-form text	Type of service affected by the discretionary action.
SINK	SINK	0{ALPHANUMERIC}14	Valid area name	The area in which the SINK is located.
SOURCE	SOURCE	0{ALPHANUMERIC}14	Valid area name	The area in which the SOURCE is located.
SPARE_CODE	N/A	0{ALPHANUMERIC}3	Defined by region	Spare code to be used at a later time. Used by PATH—NAME
STANDARDS_OF_CONDUCT_ISSUES	STDISSUE	0{ALPHANUMERIC}800	Free-form text	Issues that were in violation of the FERC Standards of Conduct. This text may include a reference pointer to a more detailed description.
START_TIME	STIME	16{ALPHANUMERIC}16	Valid Date and Time to seconds: yyyy+mo+dd+hh +mm+ss+tz	Start date and clock time of a service. When used as a query variable, it requires the return of all items whose Stop time is after the Start time. Note that for some Templates when used as a query variable the time may be only valid up to the hour, day or month. If more data is given than is valid, the hour, day or month will be used to make the date and time inclusive, i.e. date or time will be truncated to valid hour, day or month.
START_TIME_POSTED	STIMEP	16{ALPHANUMERIC}16	Valid Date and Time to seconds: yyyy+mo+dd+hh +mm+ss+tz	Query parameter to indicate all the records are to be retrieved that were posted on or after this time.
START_TIME_QUEUED	STIMEQ	16{ALPHANUMERIC}16	Valid Date and Time to seconds: yyyy+mo+dd+hh +mm+ss+tz	Start date and clock time of a service, used for requesting transactions queued after this time.
STATUS	STATUS	5{ALPHANUMERIC}25	Valid field (QUEUED, INVALID, RECEIVED, STUDY, REBID, COUNTEROFFER, DECLINED, SUPERSEDED, ACCEPTED, REFUSED, CONFIRMED, WITHDRAWN, DISPLACED, ANNULLED, RETRACTED)	QUEUED = initial status assigned by TSIP on receipt of ''customer services purchase request''. INVALID = assigned by TSIP or Provider indicating an invalid field in the request, such as improper POR, POD, source, sink, etc. (Final state). RECEIVED= assigned by Provider or Seller to acknowledge QUEUED requests and indicate the service request is being evaluated, including for completing the required ancillary services. STUDY= assigned by Provider or Seller to indicate some level of study is required or being performed to evaluate service request.

				REFUSED = assigned by Provider or Seller to indicate service request has been denied due to lack of availability of transmission capability. SELLER_COMMENTS should be used to communicate details for denial of service. (Final state). COUNTEROFFER= assigned by Provider or Seller to indicate that a new OFFER_PRICE is being proposed. REBID = assigned by Customer to indicate that a new BID_PRICE is being proposed. SUPERSEDED = assigned by Provider or Seller when a request which has not yet been confirmed is preempted by another reservation request. (Final state). ACCEPTED = assigned by Provider or Seller to indicate the service request at the designated OFFER_PRICE has been approved/accepted. If the reservation request was submitted PRECONFIRMED, the OASIS Node shall immediately set the reservation status to CONFIRMED. Depending upon the type of ancillary services required, the Seller may or may not require all ancillary service reservations to be completed before accepting a request. DECLINED = assigned by the Provider or Seller to indicate that the BID_PRICE is unacceptable and that negotiations are terminated. SELLER_COMMENTS should be used to communicate reason for denial of service. (Final state). CONFIRMED = assigned by Customer in response to Provider or Seller posting ''ACCEPTED'' status, to confirm service. Once a request has been ''CONFIRMED'', a transmission service reservation exits. (Final state, unless overridden by DISPLACED or ANNULLED state). WITHDRAWN = assigned by Customer at any point in request evaluation to withdraw the request from any further action. (Final state). DISPLACED = assigned by Provider or Seller when a ''CONFIRMED'' reservation from a Customer is replaced by a longer term reservation and the Customer has not exercised right of first refusal, if any (i.e. refused to match terms of new request). (Final state). ANNULLED = assigned by Provider or Seller when, by mutual agreement with the Customer, a confirmed reservation is to be voided. (Final state). RETRACTED = assigned by Provider or Seller when the Customer fails to confirm or withdraw the request within the required time period. (Final state).
STATUS_COMMENTS	STACOM	0{ALPHANUMERIC} 80	Free form text	Informative text.
STATUS_NOTIFICATION	STATNOT	0{ALPHANUMERIC} 200	http://URL:portnumber/direc otry/cgi script/query parameters or Mailto: *<e-mail address>*	The STATUS_NOTIFICATION data element shall contain the protocol field ''http:'', which designates the notification method/protocol to be used, followed by all resource location information required; the target domain name and port designations shall be inserted into the notification URL based on the Customer's Company registration information. The resource location information may include directory information, cgi script identifiers and URL encoded query string name/value pairs as required by the Customer's application. or mailto and email address for the status information the Customer wants to receive upon a change in STATUS of transstatus, or ancstatus.
STOP_TIME	SPTIME	16{ALPHANUMERIC}16	Valid date and time yyyy+mo+dd+hh+mm+ss+tz	Stop date and clock time. When used as a query variable, it requires the return of all items which start before the Stop time. Note that for some Templates when used as a query variable the time may be only valid up to the hour, day or month. If more data is given than is valid, the hour, day or month will be used to make the date and time inclusive, i.e. date or time will be increased to include STOP_TIME.
STOP_TIME_POSTED	STPTIMEP	16{ALPHANUMERIC}16	Valid Date and Time to seconds: yyyy+mo+dd+hh+mm+ss+tz	Query parameter to indicate all the records are to be retrieved that were posted on or before this time.
STOP_TIME_QUEUED	SPTIMEQ	16{ALPHANUMERIC}16	Valid Date and Time to seconds: yyyy+mo+dd+hh+mm+ss+tz	Stop date and clock time, used for requesting transactions queued before this time.
SUBJECT	SUBJ	0{ALPHANUMERIC} 80	Free form text	Informative text used to summarize a topic in a message.
TARIFF_REFERENCE	TARIFF	0{ALPHANUMERIC} 150	Free form text. Name and description of Tariff	Tariffs approved by FERC.
TEMPLATE	TEMPL	1{ALPHANUMERIC}20	Valid Name of Template from Section 4.3 or from LIST Template	The name of a logical collection of DATA_ELEMENTS in a User's interaction with an OASIS Node.
TIME_OF_LAST_UPDATE	TLUPDATE	16{ALPHANUMERIC}16	Valid date and time to seconds: yyyy+mo+dd+hh+mm+ss+tz	Date and time to seconds that data was last updated. May be used to search data updated since a specific point in time.
TIME_POSTED	TIMEPST	16{ALPHANUMERIC}16	Valid Date and Time to seconds: yyyy+mo+dd+hh+mm+ss+tz	Date and time a message is posted.
TIME_QUEUED	TIMEQ	16{ALPHANUMERIC}16	Valid Date and Time to seconds: yyyy+mo+dd+hh+mm+ss+tz	Date and time that the request was queued.
TIME_STAMP	TSTAMP	16{ALPHANUMERIC}16	Valid date and Time to seconds yyyy+mo+dd+hh+mm+ss+tz	Time data is created.
TS_CLASS	TSCLASS	1{ALPHANUMERIC}20	Valid classes: • FIRM • NON–FIRM • TTC • SECONDARY • Registered}	The transmission service classes provided. Four are pre-defined, while additional classes can be used if they are registered on TSIN.COM and shown in the Provider's LIST template page. SECONDARY is defined as alternate points of receipt or delivery for POINT_TO_POINT, or as nondesignated resources for NETWORK service.

Data dictionary element name	Alias	Field format: minimum characters {type of ASCII} maximum characters	Restricted values	Definition of data element
TS_PERIOD	TSPER	1{ALPHANUMERIC}20	Valid periods ON_PEAK OFF_PEAK FULL_PERIOD {Registered}	The transmission service periods provided. Three are pre-defined, while additional periods can be used if they are registered on TSIN.COM and shown in the Provider's LIST template.
TS_SUBCLASS	TSSUBC	0{ALPHANUMERIC}20	Free Form	The transmission service subclasses provided. These are freeform.
TS_TYPE	TSTYPE	1{ALPHANUMERIC}20	Valid types • POINT_TO_POINT • NETWORK • ATC • {Registered}	The transmission service types provided. Three are pre-defined, while additional types can be used if they are registered on TSIN.COM and shown in the Provider's LIST template.
TS_WINDOW	TSWIND	1{ALPHANUMERIC}20	Valid windows •YFIXED • SLIDING • EXTENDED • {Registered}	The transmission service windows provided. Three are pre-defined, while additional windows can be used if they are registered on TSIN.COM and shown in the Provider's LIST template.
TZ_	TZ	2{ALPHANUMERIC}2	Valid time zone and indication whether daylight savings time is to be used	Time zones: Atlantic time=AD, AS. Eastern time=ED, ES. Central time=CD, CS. Mountain time=MD, MS. Pacific time=PD, PS. Universal time=UT.
VALID_FROM_TIME	VALFTIME	16{ALPHANUMERIC}16	Valid date and time yyyy+mo+dd+hh+mm+ss+tz	Date and time after which the message is valid.
VALID_TO_TIME	VALTTIME	16{ALPHANUMERIC}16	Valid date and time yyyy+mo+dd+hh+mm+ss+tz	Date and time before which the message is valid.
VERSION	VER1{REAL NUMBER}6	Range of 1.0 to 9999.9	Specifies which version of the OASIS Standards and Communication Protocol to use when interpreting the request.	

[**Note:** This attachment will not appear in the Code of Federal Regulations.]

Attachment E—List of Commenters to UBP NOPR

No. and commenter name	Abbreviation
1. Allegheny Power Company.	Allegheny Power.
2. American Electric Power Company.	AEP.
3. Bonneville Power Administration.	BPA.
4. Cinergy Services	Cinergy.
5. Consumers Energy Company.	Consumers.
6. Duke Energy Corporation	Duke.
7. Edison Electric Institute ...	EEI.
8. Electric Clearinghouse, Inc..	ECI.
9. Electric Power Supply Association.	EPSA.
10. Electricity Consumers Resource Council.	ELCON.
11. Entergy Services, Inc	Entergy.
12. Florida Power Corporation.	Florida Power Corp.
13. National Rural Electric Cooperative Association.	NRECA.
14. North American Electric Reliability Council.	NERC.
15. New York State Electric & Gas Corporation.	NYSEG.
16. PJM Interconnection, LLC.	PJM.
17. Southern Company Services, Inc.	Southern.
18. Tucson Electric Power Company.	TEP.
19. Virginia Electric & Power Company.	VEPCO.

Open Access Same-Time Information System and Standards of Conduct; Docket No. RM95–9–003.

Issued February 25, 2000.

HEBERT, Commissioner, *concurring:* I write separately to explain my departure from my colleagues on one discrete issue. Today's rulemaking on uniform business practices is fine in all other respects.

The electric utility industry will be well served by a package of uniform business practices that will provide greater certainty and consistency in the on-line negotiation of discounts for transmission service. This comprehensive package also should improve communications between transmission providers and transmission customers over OASIS sites. One need only look at the natural gas pipeline industry, which already has implemented similar measures, to understand the value of uniformity of business practices in developing efficient, competitive markets.

But uniformity, while laudable in the abstract, should not be pursued at all costs. An equally important—if not more important—objective is to promote and encourage Commission cooperation with industry-led groups established to develop standards for the electronic posting and dissemination of transmission information. As the Commission has recognized in its earlier OASIS orders, such standards are highly complex and technical; their development is best-suited for industry proposals that are representative of a broad coalition of industry participants. And the Commission has previously stated that it is willing to defer, to the extent possible, to industry-developed OASIS proposals that reflect input from diverse industry segments and broad consensus among industry participants.

Here, the Commercial Practices Working Group and the OASIS How Working Group presented the Commission with a package of both mandatory business standards and voluntary ''best practices'' guides. The CPWG/How Group offered a number of reasons in support of the distinction between mandatory standards and voluntary guides. Chief among them, in my opinion, is the fact that this distinction allowed the participants in the process to develop consensus.

In this order, the Commission, citing its earlier orders, continues to applaud ''the invaluable ongoing efforts contributed by industry working group participants who have strived for consensus on contentious OASIS-related issues and reported on those efforts to the Commission.'' Slip op. at 3 n.4. I too applaud those efforts. I fail to understand, however, why the Commission so cavalierly upsets the consensus-building efforts of the CPWG/How group in rejecting the distinction between mandatory standards and voluntary guides that was so fundamental to their proposal to the Commission.

Among all of the commenters on this issue that are referenced in today's order, *see* slip op. at 8–10, only one (Duke) unequivocally favors upsetting the consensus decision to distinguish—at least for now—between mandatory standards and voluntary guides. All other commenters support either maintaining the consensus proposal indefinitely or revisiting the voluntary guides within a set period of time (say, 9 or 12 months). I agree with the latter, more representative, group of commenters. As the order indicates, slip op. at 12, the uniform business standards the Commission adopts today are likely to require revisions and enhancements as the industry gains familiarity with them. By allowing some of the standards to remain voluntary, at least for the time being, the Commission would act to promote the consensus-building process it previously has encouraged, while allowing industry participants additional time to determine whether additional uniformity is required.

Therefore, I respectfully concur.

Curt L. Hebert, Jr.
Commissioner.

[FR Doc. 00–6930 Filed 3–30–00; 8:45 am]

BILLING CODE 6717–01–U

Federal Register

Friday,
March 31, 2000

Part IV

Department of Transportation

Coast Guard

33 CFR Part 154

Marine Transportation-Related Facility Response Plans for Hazardous Substances; Proposed Rule

DEPARTMENT OF TRANSPORTATION

Coast Guard

33 CFR Part 154

[USCG–1999–5705]

RIN 2115–AE87

Marine Transportation-Related Facility Response Plans for Hazardous Substances

AGENCY: Coast Guard, DOT.

ACTION: Notice of proposed rulemaking; notice of public meeting.

SUMMARY: The Coast Guard proposes regulations that would require response plans for Marine Transportation-Related facilities that could reasonably be expected to cause substantial or significant and substantial harm to the environment by releasing a hazardous substance into the navigable waters of the United States. These regulations are mandated by the Oil Pollution Act of 1990 (OPA 90), which requires the President to issue regulations requiring the preparation of hazardous substance response plans. The purpose of requiring response plans is to minimize the impact of a hazardous substance discharge on human health and the environment. In addition, this notice announces a public meeting on response plans for Marine Transportation-Related facilities.

DATES: Written comments and related material must reach the Docket Management Facility on or before June 29, 2000. The meeting will be held on Wednesday, May 10, 2000, from 9 a.m. to 5 p.m. and Thursday, May 11, 2000, from 9 a.m. to 1 p.m. The meeting may close early if all business is finished. Comments sent to the Office of Management and Budget (OMB) on collection of information must reach OMB on or before May 30, 2000.

ADDRESSES: The public meeting will be held in the hearing room of the Marine Safety Office, 1615 Poydras Street, New Orleans, LA 70112–1254. To make sure your written comments and related material are not entered more than once in the docket, please submit them by only one of the following means:

(1) By mail to the Docket Management Facility (USCG–1999–5705), U.S. Department of Transportation, room PL–401, 400 Seventh Street SW., Washington, DC 20590–0001.

(2) By hand delivery to room PL–401 on the Plaza level of the Nassif Building, 400 Seventh Street SW., Washington, DC, between 9 a.m. and 5 p.m., Monday through Friday, except Federal holidays. The telephone number is 202–366–9329.

(3) By fax to the Docket Management Facility at 202–493–2251.

(4) Electronically through the Web Site for the Docket Management System at http://dms.dot.gov.

You must also mail comments on collection of information to the Office of Information and Regulatory Affairs, Office of Management and Budget, 725 17th Street NW., Washington, DC 20503, ATTN: Desk Officer, U.S. Coast Guard.

The Docket Management Facility maintains the public docket for this rulemaking. Comments and material received from the public, as well as documents indicated in this preamble as being available in the docket, will become part of this docket and will be available for inspection or copying at room PL–401 on the Plaza level of the Nassif Building at the same address between 9 a.m. and 5 p.m., Monday through Friday, except Federal holidays. You may also find this docket on the Internet at http://dms.dot.gov.

FOR FURTHER INFORMATION CONTACT: For questions on this proposed rule, call LT Michael Roldan, Office of Operating and Environmental Standards (G–MSO), Coast Guard, telephone 202–267–0106; e-mail: mroldan1@comdt.uscg.mil or LT Claudia Gelzer, Office of Response (G–MOR), Coast Guard, telephone 202–267–1983; e-mail: cgelzer@comdt.uscg.mil. These telephones are equipped to record messages on a 24-hour basis. For questions on viewing or submitting material to the docket, call Dorothy Walker, Chief, Dockets, Department of Transportation, telephone 202–366–9329.

SUPPLEMENTARY INFORMATION:

Request for Comments

We encourage you to participate in this rulemaking by submitting comments and related material. If you do so, please include your name and address, identify the docket number for this rulemaking (USCG–1999–5705), indicate the specific section of this document to which each comment applies, and give the reason for each comment. You may submit your comments and material by mail, hand delivery, fax, or electronic means to the Docket Management Facility at the address under **ADDRESSES;** but please submit your comments and material by only one means. If you submit them by mail or hand delivery, submit them in an unbound format, no larger than 8½ by 11 inches, suitable for copying and electronic filing. If you submit them by mail and would like to know they reached the Facility, please enclose a stamped, self-addressed postcard or envelope. We will consider all comments and material received during the comment period. We may change this proposed rule in view of them.

Public Meeting

We will hold a public meeting regarding this proposed rulemaking on Wednesday, May 10, 2000, from 9 a.m. to 5 p.m. and Thursday, May 11, 2000, from 9 a.m. to 1 p.m. The meeting will be held at the address under **ADDRESSES.**

Background and Purpose

The Clean Water Act (CWA) (33 U.S.C. 1321(j)(5)), as amended by section 4202(a)(5) of OPA 90 (Pub. L. 101–380), requires owners or operators of tank vessels, offshore facilities, and onshore facilities that could reasonably be expected to cause substantial harm to the environment to prepare and submit plans for responding, to the maximum extent practicable, to a worst case discharge, or a substantial threat of such a discharge, of oil or a hazardous substance into or on the navigable waters, adjoining shoreline, or the exclusive economic zone. Final rules for oil spill response plans were published (''Vessel Response Plans'' (61 FR 1052; January 12, 1996); and ''Response Plans for Marine Transportation-Related Facilities'' (61 FR 7890; February 29, 1996)). This proposed rulemaking only addresses OPA 90 response planning requirements for hazardous substances at Marine Transportation-Related (MTR) facilities. We have also published an NPRM entitled ''Tank Vessel Response Plans for Hazardous Substances'' (64 FR 13734; March 22, 1999).

Consistent with provisions of OPA 90, these proposed regulations are intended to address gaps in hazardous substance spill response readiness that now exist for MTR facilities. The regulations are not intended to duplicate or supersede any other regulations that have been promulgated by the Coast Guard or other Federal agencies. Because response planning at onshore facilities is not limited to bulk hazardous substances, it appears that there exists a potential for redundancy with existing response planning regulations. The redundancy is generally eliminated through use of the National Response Team's Integrated Contingency Plan Guidance. To further ensure that duplication of regulations is avoided, the Coast Guard and the Environmental Protection Agency (EPA) have jointly reviewed the various regulations that cover MTR facilities.

In Executive Order (E.O.) 12777, the President divided the responsibility for

implementing the provisions of OPA 90 regarding hazardous substance response plans among various Federal agencies. Through a series of delegations, the Coast Guard was granted the authority to implement hazardous substance response plan requirements for fixed and mobile onshore MTR facilities and for deepwater ports. The EPA was granted the authority to regulate fixed onshore non-transportation-related facilities. The Research and Special Programs Administration (RSPA) was granted the authority to regulate onshore non-marine transportation-related facilities (*i.e.,* pipelines, motor carriers, and railways). The Department of Interior's Mineral Management Service (MMS) was granted the authority to regulate offshore facilities and associated pipelines, other than deepwater ports subject to the Deepwater Ports Act of 1974.

Regulatory History

Advance Notice of Proposed Rulemaking

We published an Advance Notice of Proposed Rulemaking (ANPRM) on this project in the **Federal Register** on May 3, 1996 (61 FR 20084). The ANPRM discussed the background, statutory requirements of section 311(j) of the CWA, and possible regulatory approaches. In addition, the ANPRM raised 96 questions for public comment. We received 42 comment letters addressing the questions the respondents deemed applicable. We considered all of the comment letters in developing this NPRM.

Public Meetings

We conducted public meetings on July 30, 1996, in Washington, DC, and August 5, 1996, in Houston, TX. Comments made during these meetings were considered in the development of these proposed regulations.

We are working on a related rulemaking titled ''Tank Vessel Response Plans for Hazardous Substances'' (USCG–1998–4354) and have already published proposed rules in the **Federal Register**. As announced in the **Federal Register** (64 FR 31994; June 15, 1999), we held a public meeting for the related rulemaking on August 12 and 13, 1999, in Houston, Texas. Because of similarities in our proposed regulations for tank vessels and facilities, some comments made during the public meeting for tank vessels may also be applied to facilities. As we proceed towards a final rule for facility response plans, we will consider comments made at the August 1999 public meeting for tank vessels along with comments made to this rulemaking.

Response Plan Workshop

In addition to accepting written comments concerning the development of regulations for vessel response plans for hazardous substances, a workshop and meeting were held in Houston, TX, on February 26 and 27, 1997. The purpose of the workshop was to engage various stakeholders in issues that had been identified as significant in response to the ANPRM. Approximately 120 persons participated in the workshop. The workshop focused on four specific issues identified in advance by the Coast Guard. These issues were:

(1) Role and Contents of First Responders' Guides;

(2) Role and Capabilities of Decision Support Systems;

(3) Chemical Removal Technology; and

(4) Public Responder versus Private Responder Issues.

The recommendations from the workshop were considered when developing this NPRM. A summary of the proceedings of the workshop is available for review and copying in the public docket as described under **ADDRESSES.**

Advisory Committee

Under the auspices of the Chemical Transportation Advisory Committee (CTAC), the Hazardous Substances Response Plan Subcommittee was formed to develop and recommend hazardous substance response plan criteria for our consideration in developing requirements for OPA 90-mandated response plans. In addition to the formation of a Steering Committee, the Subcommittee established the following working groups to address appropriate aspects of response planning: Fate and Effects, Response Resources and Methodology, and Planning Process. Based on work done by the groups, the CTAC subcommittee delivered a report containing findings and recommendations. Input from the committee was used in the development of this NPRM.

Discussion of Proposed Rule

1. General

In response to public comments and recommendations from the Chemical Transportation Advisory Committee (CTAC), we established several principles to guide the development of this proposed rule. These principles specify that the regulations should:

a. Primarily address human health, including the health of the general public, vessel crew, facility personnel and responders;

b. Recognize and promote existing industry best practices;

c. Allow for flexibility in plan development to accommodate other existing practices that are effective;

d. Avoid prescriptive ''one size fits all'' requirements;

e. Not duplicate existing federal regulations;

f. Be consistent, to the utmost, with international standards;

g. Reflect the differences in planning requirements between oil and hazardous substances, specifically as they relate to recoverability and risk of exposure; and

h. Be structured so that oil response plans for MTR facilities may be amended or augmented to meet OPA requirements for hazardous substances.

A basic premise of these proposed regulations is that, for a hazardous substance discharge, the availability of information and expertise is essential to support response decision-making, while the mobilization of containment and collection equipment will be feasible only as conditions allow. For discharges of oil, some portion of the spilled product may be recoverable through containment and collection. The amount recovered is largely a function of how rapidly response equipment can be deployed. For hazardous substances, containment and collection may be viable for certain chemicals, depending on environmental conditions and safety considerations. Limitations on containment and collection are also imposed by the compatibility of equipment with the hazardous substance in question. The most effective mitigation strategy may be to control the source of the discharge, not contain and collect the hazardous substance. We prefer to foster a philosophy of ''quickly assess the risk and respond appropriately,'' instead of ''rush in to contain and collect the product.'' Above all, getting response information is the critical problem due to the large number and various potential behaviors of hazardous substances.

For the reasons previously described, these proposed regulations contain requirements that ensure access to certain information and equipment during a response, and the availability of appropriate technical expertise as necessary. We intend that, through an analysis of the required information by area specialists, the most appropriate response strategies will be identified and performed.

2. Integrated Contingency Plan Guidance

These proposed regulations are intended to fully accommodate the use of the National Response Team's Integrated Contingency Plan (ICP) Guidance, published in the **Federal Register** on June 5, 1996 (61 FR 28642). The purpose of the guidance is to provide a mechanism for consolidating multiple plans that facilities have prepared to comply with various regulations into one functional emergency response plan, minimizing or eliminating duplication of information. The guidance describes essential elements of a ''core plan,'' as well as the need for annexes containing appropriate supplementary information. The following federal regulations are specifically addressed in the National Response Team guidance document:

- Minerals Management Service Facility Response Plan Regulation (30 CFR part 254).
- Department of Transportation Research and Special Programs Administration (RSPA) Pipeline Response Plan Regulation (49 CFR part 194).
- U.S. Coast Guard Response Plans For Oil Facilities Regulations (33 CFR part 154—subpart F).
- Environmental Protection Agency (EPA) Oil Pollution Prevention Regulation (40 CFR 112.7, 112.20, and 112.21).
- EPA Risk Management Programs Regulation (40 CFR part 68).
- EPA Resource Conservation and Recovery Act Contingency Planning Requirements (40 CFR parts 264, 265, and § 279.52).
- Occupational Safety and Health Administration (OSHA) Emergency Action Plan Regulation (29 CFR 1910.38(a)).
- OSHA Process Safety Standard (29 CFR 1919.119).
- OSHA Hazardous Waste Operations and Emergency Response (HAZWOPER) Regulation (29 CFR 1910.120).

If a facility uses the ICP format, then the Coast Guard would only review those portions of the ICP that are specifically required by these proposed regulations and by the Coast Guard's regulations on response plans for oil facilities.

- Department of Transportation Research and Special Programs Administration (RSPA) Pipeline Response Plan Regulation (49 CFR part 194).
- U.S. Coast Guard Response Plans For Oil Facilities Regulations (33 CFR part 154—subpart F).
- Environmental Protection Agency (EPA) Oil Pollution Prevention Regulation (40 CFR 112.7, 112.20, and 112.21).
- EPA Risk Management Programs Regulation (40 CFR part 68).
- EPA Resource Conservation and Recovery Act Contingency Planning Requirements (40 CFR parts 264, 265, and § 279.52).
- Occupational Safety and Health Administration (OSHA) Emergency Action Plan Regulation (29 CFR 1910.38(a)).
- OSHA Process Safety Standard (29 CFR 1919.119).
- OSHA Hazardous Waste Operations and Emergency Response (HAZWOPER) Regulation (29 CFR 1910.120).

If a facility uses the ICP format, then the Coast Guard would only review those portions of the ICP that are specifically required by these proposed regulations and by the Coast Guard's regulations on response plans for oil facilities.

3. Summary of Proposed Requirements

Following is a discussion of sections contained in the proposed rule.

Section 154.2015 indicates who must comply with these regulations. As provided in OPA 90, these regulations apply to owners and operators of an MTR facility that, because of its location, could reasonably be expected to cause substantial harm or significant and substantial harm to the environment by discharging hazardous substances into or on the navigable waters, adjoining shorelines, or the exclusive economic zone. For the purpose of these regulations all MTR facilities that transfer any bulk hazardous substances to vessels are designated as significant and substantial harm facilities unless otherwise reclassified by the Captain of the Port (COTP). All requests for reclassification from significant and substantial harm to substantial harm must be made in writing. Substantial harm facilities need only have plans submitted to the COTP. These proposed regulations do not apply to packaged or containerized hazardous substances; they do apply to bulk transfers of hazardous substances. Bulk is defined in § 154.2020 of the proposed regulations.

Unlike existing regulations, which apply only to facilities that transfer oil or hazardous substances to a vessel with a capacity of 250 barrels or more, these proposed regulations contain no minimum thresholds for compliance. It is assumed that MTR facilities affected by these regulations will not engage in small quantity bulk transfers. The characteristics of hazardous substances further preclude the establishment of any minimum threshold, as the discharge of even a small quantity of a hazardous substance may lead to death, injury, environmental damage, or, as a minimum, a need to notify proper authorities. For these reasons, the 250-barrel threshold is largely irrelevant for the purpose of response planning for hazardous substances.

Because OPA 90 response planning requirements amend the CWA, regulations are statutorily restricted to the hazardous substances covered by the CWA. The complete list of CWA hazardous substances can be found in 40 CFR Table 116.4.

By a Memorandum of Understanding (MOU) between the EPA and the Department of Transportation published in the **Federal Register** on December 18, 1971 (36 FR 24080), we exercise authority on the MTR portion of an oil onshore facility. Due to the relationship of oils and hazardous substances in OPA 90 and FWPCA, we are extending this MOU to include hazardous substances for jurisdictional purposes. Therefore, the list of chemicals is further reduced to those CWA hazardous substances that are transferred in bulk quantities to or from a vessel. If the CWA list of hazardous substances is modified, the modification will automatically be covered under these regulations.

Often bulk ''hazardous substance'' cargoes consist of mixtures and solutions of CWA listed chemicals. Under 40 CFR 116.4, a hazardous substance is defined as including any isomers and hydrates, mixtures and solutions containing any of the listed substances. If applied to response planning, this definition could potentially apply to mixtures, such as chlorinated drinking water, with extremely low concentrations of listed substances.

To establish a reasonable and recognized standard for response planning, we propose that the regulations apply to any hazardous substance, including isomers and hydrates, as well as any mixtures or solutions that contain 10% or more of a single CWA hazardous substance by weight.

This percentage is consistent with the International Maritime Organization's rules for establishing shipping requirements for mixtures (*Guidelines for the Provisional Assessment of Liquids Transported in Bulk,* MEPC/Circ.265).

Some comments made during public meetings and in response to the ANPRM encouraged us to expand the applicability of these regulations beyond the CWA hazardous substances that are carried in bulk. For the reasons

described previously, OPA 90 and the CWA, as amended, prevent us from doing this. However, a concerted effort was made to ensure that response plans would contain tools that could be used by plan-holders and responders following any hazardous substance release, to include those not covered under these regulations.

Section 154.2020 includes definitions that apply to the subpart. The definitions used in these proposed regulations mirror those used in oil spill response planning regulations. Where appropriate, some of the definitions have been added, deleted or modified to make them more applicable to hazardous substance response activities or to improve clarity.

For oil spill response, the term ''adverse weather conditions'' includes weather conditions that hinder containment and collection efforts, i.e., rough seas, rain and wind. In the case of hazardous substance discharges, these conditions might be advantageous in that they may aid in the rapid dispersion of the hazardous substance. In contrast, the most adverse weather conditions, or those that could maximize exposure to human health, will often be calm seas, no wind and no precipitation. Therefore, we define ''adverse weather'' to mean the environmental conditions that magnify the risk when a hazardous substance discharge occurs and must be considered when identifying response resources in a response plan.

The term ''bulk'' indicates that a hazardous substance is transferred through a pipe or hose to or from a tank vessel. The tank on the vessel may be an independent, integral, or portable tank. However, a marine portable tank that is placed onto a vessel is not considered a ''bulk transfer'' if the tank was filled before being put on the vessel. We have included the definitions of tanks to clarify the term ''bulk.'' These definitions correspond to the definitions of tanks under 46 CFR 98.30–1, 98.30–2, 151.15–1 and 153.2. We intend to add these definitions to the tank vessel response plan final rule to harmonize the parallel rulemaking.

The terms, ''floater'' and ''sinker,'' are used to describe hazardous substances that could, under proper conditions, be contained and collected following a discharge. Both of these classifications represent hazardous substances that do not tend to react chemically with water, vaporize, or dissolve.

The term ''MTR facility'' is that portion of a larger facility or complex designed to conduct transfer operations. The MTR facility extends from the first valve inside a storage tank's secondary containment to the transfer system's connection with the vessel. In the absence of a storage tank's secondary containment, the MTR facility extends from the valve or manifold adjacent to the tanks under EPA's jurisdiction to the transfer system's connection with the vessel. It is our intent to only cover the transfer system outside EPA's jurisdiction.

For both oil and hazardous substances, the CWA defines, in section 311(a)(24), ''worst case discharge'' for facilities to mean ''the largest foreseeable discharge in adverse weather conditions.'' The CWA further defines, in section 311(a)(2), the term ''discharge'' to mean ''any spilling, leaking, pumping, pouring, emitting, emptying, or dumping. * * *'' Hazardous substance discharges, even in the marine environment, may result in airborne releases. Therefore, we have determined, for the purposes of these regulations, the term ''discharge'' includes both waterborne and airborne releases from MTR facilities. We have also defined ''incident'' as a discharge or substantial threat of a discharge.

As reflected in existing oil response planning regulations and in this rulemaking, the ''largest foreseeable discharge'' is a planning volume that constitutes the sum of the following three volumes:

(1) The volume of the entire contents of the in-line and break-out tanks.

(2) The volume of a hazardous substance discharged at the maximum flow rate for the maximum time period from discovery to shutdown.

(3) The leakage after shutdown.

Section 154.2021 discusses the methods that a plan-holder can use to identify resources that must be ensured available under the proposed regulations. These requirements are essentially unchanged from oil response plan regulations, although different types of resources must be ensured available.

Section 154.2022 contains the requirement to designate a Qualified Individual (QI) and alternate QI in the plan. As prescribed by OPA 90, a QI must have full authority to implement all response actions necessary to minimize or mitigate damage to public health, the environment, and public and private property. A QI must be able to, immediately and continuously, communicate with the appropriate federal official and response resource providers, as needed. It is not assumed that a QI for oil spill response will necessarily be an appropriate QI for hazardous substance incidents.

Several comments to the ANPRM and public meetings have indicated that under the oil response planning regulations, some QI's do nothing more than obligate funds. These comments suggest that the role of the QI does not include involvement in decisions relating to a response and therefore, the QI does not need to have any understanding of incident response. This is not our expectation of a QI.

We understand that Congress intended a ''qualified individual'' to have basic qualifications that demonstrate an ability to coordinate, with full authority from the plan-holder, a response to an incident. Early in a response, when the risks are often greatest, the QI may independently make decisions that could impact the overall response. For example, a plan may identify a list of contractors that provide particular response services. Without a basic knowledge of chemical response, a QI may not know which resource provider to contact or be able to characterize the nature of the incident to responders. This knowledge may not be as important for oil spills, where response options are more standardized, and the immediate threat to human health is not as prevalent. Therefore, we propose minimum training requirements for a QI.

To build on an existing standard that is widely accepted and demonstrates the appropriate skill set, the proposed regulations require QI's to meet the requirements of an incident commander under the OSHA HAZWOPER provisions in 29 CFR 1910.120(q)(6)(v). Qualifications are further described in emergency response training guidance for incident commanders contained in Appendix E to § 1910.120. The OSHA training requirement for incident commanders should be interpreted as a minimum qualification, not an absolute measure of expertise in and of itself. Plans require designating each QI in writing, and indicate that the QI is familiar with the response plan and has full authority to implement actions to contain, remove, or otherwise minimize or mitigate threats to human health, the environment, and public property. Owner or operators should ensure that the QI's training and experience are adequate to carry out designated responsibilities.

We welcome comments regarding the recognition of other standards or certifications that demonstrate a working knowledge of hazardous substance response that is adequate for the responsibilities contained in these regulations for a QI.

At the time of an incident, a responsible employee of the facility becomes the incident commander and initiates notification and mitigation

procedures, as appropriate. When that employee notifies the QI of the hazardous substance incident, the QI may assume the role of incident commander. Individuals acting as incident commander may change as an incident progresses, particularly if the response to the incident is prolonged.

Section 154.2025 describes the actions that could be taken to receive authorization to transfer bulk hazardous substances after submitting a plan to the Coast Guard, but before it has been approved. These proposed requirements mirror those currently required under oil response plans, and enable those owners or operators who are currently conducting hazardous substance operations to continue operations while the plans are being developed, submitted, and approved.

Section 154.2026 describes what owners and operators could do to obtain an interim operating authorization. This requirement is essentially the same as current requirements under oil response plans. A request generally consists of a written request to the COTP certifying that the response resources have either been contracted or identified per the requirements of these regulations.

Section 154.2030 provides plan-holders with the flexibility to modify existing oil response plans with additional information that meets hazardous substance response-specific requirements. As discussed in section two of the ''Discussion of Proposed Rule'' of this preamble, we also fully endorse the use of the National Response Team's ICP Guidance.

Section 154.2032 contains requirements that pertain to the format and contents of response plans. These requirements have been designed to maximize consistency with facility oil spill response plan requirements.

Section 154.2035 describes the required contents of each section of a response plan. The following is a discussion of several of the proposed requirements that would deviate substantially from existing oil spill response plan provisions.

Paragraph (a) requires facility information such as facility name, address, county, telephone and facsimile numbers, etc. This information is commonly found in other required response plans, and per the ICP Guidance, may be referenced if in another plan.

Paragraph (b) includes:

(1) All required notifications, in a prioritized fashion, that must take place following a hazardous substance incident.

(2) All procedures necessary to ensure that required notifications occur.

(3) An example of a form that contains minimal information to be included in the initial report to Federal, State, and designated local authorities.

Paragraph (c) contains requirements for developing an impact analysis for a worst case discharge. The intent of this requirement is to ensure that in the event of a worst case discharge, owners or operators will have pre-identified the area in which adverse impact to human health and the environment could occur.

Because of the many variables that influence the fate, transport and effects of a hazardous substance discharge, these analyses are not intended to be precise. Rather, they are designed to provide a macroscopic view of potential impacts. By identifying worst case discharge planning volumes, endpoints, and distances to endpoints, diagrams of impacted areas for each hazardous substance can be developed. Further, within these impact areas, owners or operators will be able to identify the magnitude of potential exposure to humans and the environment, and factor this information into the overall response.

An endpoint is a threshold defining a hazardous condition, such as an exposure level or pollutant concentration. For example, under the EPA Risk Management Plans, the endpoint for a toxic substance is its Emergency Response Planning Guideline Level 2 (ERPG–2) developed by the American Industrial Hygiene Association. Endpoints can be obtained or derived from health guideline values from a recognized authority, to include Federal or State agencies, professional associations, or scientific studies. An endpoint is used to determine the perimeter of an area adversely impacted by a hazardous substance discharge.

The EPA is currently developing Acute Exposure Guideline Levels (AEGL's) to establish airborne threshold concentrations for acutely toxic chemicals above which adverse effects are seen in humans. As developed, we may find that these are acceptable endpoints under our hazardous substance response regulations.

The requirement to develop an impact analysis was designed to align with those found in the EPA Risk Management Plan (RMP) regulations (40 CFR part 68); therefore, information completed under those regulations may be referenced or otherwise incorporated. We envision that the analysis will result in a series of diagrams illustrating the areas potentially impacted, as well as human and environmental receptors within those areas.

Paragraph (d) requires that plans contain discharge mitigation procedures. While all plans must include basic procedures such as personnel safety, use of personal protective equipment (PPE), and job responsibilities, several of the procedures will be dictated by the extent facility employees (as opposed to contracted responders) will be involved in mitigating an incident and conducting air and water monitoring.

Paragraph (e) requires that plans describe the organizational structure that will be used to manage response operations. This structure must outline the roles and responsibilities of the specific functional areas contained in the National Interagency Incident Management System (NIIMS) Incident Command System (ICS). This organizational structure is described in the U.S. Coast Guard Field Operations Guide (ICS–OS–420–1). This document can be obtained electronically via Internet URL http://www.uscg.mil/hq/g-m/nmc/response/fog/fog.htm or requested by writing or telephoning U.S. Coast Guard Headquarters (G–MOR–3), 2100 Second Street SW., Washington, DC 20593–0001, 202–267–6860.

Paragraph (e)(4)(i) contains a provision that requires an understanding of the unified command. Briefly summarized, the unified command consists of a—

- Federal On-Scene Coordinator (Federal OSC);
- State On-Scene Coordinator (SOSC);
- Local emergency coordinator; and
- Responsible party's incident commander.

They direct and oversee all public and private resources dedicated to the response. Unified command members are expected to establish joint control over an incident, and develop mutually agreeable response strategies. If the unified command cannot develop mutually agreeable response strategies, or if the Federal OSC believes that the responsible party's actions are unsatisfactory, the Federal OSC may assume overall control of the response. This action is normally used as a last resort when the responsible party is uncooperative with federal and state representatives.

This paragraph also requires that each plan describe the key roles and responsibilities of the incident commander, defined in the proposed regulations as the designated representative of the responsible party in the unified command. This individual may be the QI.

Paragraph (e)(4)(iv) requires that each plan describe how the responsible party will coordinate with local public

response organizations following a hazardous substance incident. Although OPA 90 explicitly requires the availability of private resources to respond to these releases, local responders, such as firefighters and hazardous materials response teams, will probably respond as well. This requirement recognizes the benefits gained by ensuring an effective liaison between the responsible party and these response organizations.

Paragraph (e)(5) contains requirements to have the capability to rapidly integrate the following types of expertise into the spill management team: product specialist, toxicologist, chemist or chemical engineer, and certified industrial hygienist. The need for these areas of specialty to be involved will be dictated by each discharge scenario. However, the response to an incident will be more effectively executed if this expertise is available to advise the unified command. Therefore, these specialties must be accessible.

The requirement contained in paragraph (f) of this section would call for plan-holders to develop a risk-based decision support process. Public comments suggested that the use of automated ''decision support systems'' or ''expert systems'' may be an effective tool for use in determining response strategies. This proposed requirement provides a tool to be used by responders to ensure thorough consideration of risk factors that may influence response activities. This section of the plan would include a description of processes to identify, evaluate, control and communicate risks of a hazardous substance incident. This requirement could be met through a checklist, decision tree, flow diagram, automated system, or any other method that contains the required components.

Paragraph (g) contains requirements relating to response resources that must be contracted, as well as resources that need only be identified in the plan. The likelihood of needing certain equipment in a worst case discharge is directly related to whether that equipment must be contracted. It is likely that PPE, monitoring equipment, and dispersion modeling will be necessary in each incident to assess the potential risks and develop response strategies. Unlike oil spills, where containment and collection strategies are standard, many hazardous substances, once discharged, cannot be contained or collected. The first priority for these types of incidents is to minimize the threat to human health. The proposed equipment requirements are designed to do this.

The use of removal equipment (such as in situ treatment equipment, chemical detection equipment and containment and collection equipment) is less probable and is limited to certain recoverable hazardous substances. Consequently, equipment requirements correspond to two recoverable types of hazardous substances: equipment used to recover ''sinkers'' and equipment used to recover ''floaters.'' It is intended that these recoverable hazardous substances do not include those that are reactive in water, and therefore could not be contained or collected under any conditions.

For plan-holders transferring hazardous substances that can be contained and collected (*i.e.,* floaters), paragraph (g)(2) requires that a specified amount of response resources must be contracted. This rule also proposes times in which contracted equipment needs to be available on-scene; in some cases the equipment may not be deployed. These time requirements are based on the time of discovery of the incident. Decisions pertaining to response strategies and equipment deployment will be made on a case-by-case basis. The time requirement ensures that, if needed, the equipment is available for use.

Beyond this specified amount, additional removal equipment must be identified and listed in the plan, but not contracted, so it can be quickly mobilized when appropriate. The equipment need not be ensured available by contract or other approved means because the probability of its use is limited, and factors influencing a potential incident create an almost limitless number of response scenarios.

Paragraph (i) requires that plans include certain information and activities pertaining to hazardous substance response exercises. The requirements are aligned with the requirements contained in oil spill response plan regulations for facilities, except that plan-holders now conducting oil spill exercises would be allowed to replace between 25 percent and 75 percent of those exercises with hazardous substance exercises. The percentage would be determined by the plan-holder, and should reflect the relative number of oil and hazardous substance transfers conducted. We are currently examining methods in which the Preparedness for Response Exercise Program (PREP) could be modified to assist the regulated community by providing hazardous substance exercise program guidelines.

Section 154.2040 contains the required contents of each appendix to the response plan.

Paragraph (a) requires that the plan contains certain facility-specific information. This information includes physical descriptions of mooring areas, transfer locations, control stations, locations of safety equipment, locations and capacities of all piping and storage tanks, descriptions of vessels transferring at the facility, and other information related to hazardous substance transfers.

Paragraph (b) would require the inclusion of chemical-specific information in each plan. The types of information would include cautionary response considerations, health hazards, fire hazards, chemical reactivity, water pollution, shipping information, hazard classifications, and physical and chemical properties.

Hazardous-substance-specific information required in the proposed rule is essentially the same information that is contained in the Chemical Hazards Response Information System (CHRIS). CHRIS has been expanded to include more chemicals, as well as improvements in format, content, and capabilities. It has historically functioned as a widely accepted source of chemical-specific information for use by responders and response plan developers.

Because CHRIS is one of many tools that responders could use in planning for and during an actual response, and because responders and response planners need the flexibility to choose their own response tools, we do not propose to require the use of the CHRIS manual.

Unlike previous versions of CHRIS, which were available only as hard-copy manuals, the new version is available in hard-copy, electronic, and Internet formats. The revised CHRIS gives users flexibility to tailor the system to meet specific needs. The electronic version resides in a searchable database that allows for customized queries. Comments on how to further improve CHRIS are welcome and may be forwarded to the location listed under **ADDRESSES.**

Section 154.2045 includes requirements to ensure that response resources are periodically inspected and maintained, and that other activities, necessary to ensure that the equipment is in good working order, are conducted.

Section 154.2055 calls for plan-holders to conduct their own evaluations of response resource providers named in response plans. These evaluations would cover both equipment adequacy and competency of personnel resources. The plan-holder must provide written certification of

this evaluation, signed by the owner or operator.

We will consider adopting privately-sponsored programs that establish a standard that assures adequate capabilities of resource providers exist in order to meet the plan requirements. We encourage the development of such a program to reduce the burden on owners and operators of conducting individual provider evaluations.

Facility response plans are ''self-certifying'' in nature; the plans require two certifications as provided for by 33 CFR 154.2055 and 2065(a)(1). The scope of these certification statements includes the assurance that (1) the response resources required by the applicable subparts have been ensured available through contract or other approved means and are adequate to carry out the planned response requirements, and (2) the plan meets all requirements of the regulations. As such, please note that any knowingly fraudulent statements or misrepresentations regarding contracted resources within the plan can result in an owner or operator being criminally prosecuted under 18 U.S.C. 1001, which, upon conviction, carries criminal penalties of a fine, up to five years of imprisonment, or both.

Assessment

Due to substantial public interest, this proposed rule is a ''significant regulatory action'' under section 3(f) of Executive Order 12866. The Office of Management and Budget has reviewed it under that Order. It requires an assessment of potential costs and benefits under section 6(a)(3) of that Order. It is significant under the regulatory policies and procedures of the Department of Transportation (44 FR 11040; February 26, 1979). A draft Assessment is available in the docket as indicated under **ADDRESSES.** A summary of the Assessment follows:

The Coast Guard does not anticipate that the proposed rule will result in a significant economic burden on regulated entities. These proposed regulations are expected to impact only those facilities that must comply with any new requirements. The Coast Guard will also incur costs related to plan review and approval.

Benefits are anticipated to result from an increased level of preparedness and efficiency in conducting response operations. Anticipated benefits from these regulations include averted pollution, a reduction in injuries and property damage associated with hazardous substance discharges, the avoidance of costs incurred by both public and private entities directly involved in response operations, and reduction of impacts on populations located in the vicinity of such discharges.

An estimated 225 companies own as many as 450 facilities which transfer bulk chemicals to or from vessels in U.S. waters. While all of these facilities do not transfer the specific hazardous substances covered under these regulations, the analysis uses the conservative assumption that all of these facilities are affected by the regulations.

In determining the costs and benefits of the proposed regulations, the Assessment for this proposed rule considered the following potential regulatory components:

1. The Coast Guard will take no action beyond existing regulations.

2. Regulations will require the submission of response plans containing information regarding QIs, training, exercises, hazardous substance characteristics, notification procedures, and other personnel procedures. This is identified as component A in the Assessment.

3. The regulations will encourage a ''first responders guide'' and require a ''decision support system''. This is identified as component B in the Regulatory Assessment.

First responders guides are concise instructions or handbooks that would be immediately available to personnel most likely to be at risk in the event of a hazardous substance incident, and therefore most likely to take immediate actions. The level of detail in these guides would be determined by each facility's expectation of their personnel in the event of an incident. It is intended that the guides would be as specific as possible, and not include generic guidelines that allow for broad interpretation by those expected to use them.

The decision support systems have two elements. The first element consists of tools that responders can use to analyze risks associated with a hazardous substance incident and that assist in making decisions related to identifying and evaluating response strategies. These tools could be automated or manual. The second element consists of a human-based decision support team. Team members will be specialists such as a product specialist, a toxicologist, a chemist or chemical engineer, and an industrial hygienist. A team member may serve as one or more specialists.

4. The preferred regulatory approach includes components A and B, plus requiring companies to contract for spill response equipment and conduct deployment drills. Regulations will essentially mirror requirements for facility response plans for oil now found in 33 CFR part 154 by requiring contracted containment and removal equipment to respond to hazardous substance incidents. This approach, designated as Alternative 1 in the Assessment, is reflected in this proposed rule.

Cost-Effectiveness Summary

The measures included in the selected regulatory alternative are expected to yield a net cost-effectiveness of about $3,419 per barrel of hazardous substance spillage averted. This cost-effectiveness value is expressed in 1997 dollars and is a ten-year present value (PV). The cost of the proposed rule is approximately $99.44 million, while its benefits are approximately 23,300 barrels of pollution averted, and approximately $19.77 million in avoided costs. Subtracting the avoided costs of the proposed rule from its total cost yields a net rule cost of about $79.67 million. Dividing this net cost by 23,300 barrels yields the net cost-effectiveness ratio of $3,419 per barrel unspilled. This procedure allows us to compare pollution and property damage benefits together.

The total first-year cost of these new requirements to industry is estimated to be $18.93 million. The recurring costs are estimated to be $14.56 million per year.

The estimated cost for component A only is $74.17 million. Its benefits include 14,103 barrels of avoided pollution and $11.97 million of damages averted. Its net cost-effectiveness is $4,411 per barrel unspilled.

The marginal cost for the additional measures contained in component B and not included in component A is $1.08 million. Marginal benefits include 3,777 barrels of avoided pollution and $3.21 million of damages averted. The marginal net cost effectiveness of these additional measures is $(563) per barrel unspilled. A negative cost effectiveness results from the damages averted being greater than the cost of the component.

The marginal cost for the additional measures contained in Alternative 1 not included in component B is $24.18 million. Marginal benefits include 5,420 barrels of avoided pollution and $4.59 million of damages averted. The marginal net cost effectiveness of these additional measures is $3,615 per barrel unspilled.

Non-quantified benefits could further decrease the cost per barrel of pollution averted. The most significant non-quantifiable benefit is the usefulness of response plans in many chemical

discharge scenarios, not just those involving a worst case discharge of bulk Clean Water Act hazardous substances. History shows that, while only a limited number of ''worst case discharges'' of Clean Water Act hazardous substances have occurred in recent years, hundreds of discharges involving other chemicals, and in smaller quantities, have occurred. Response to these discharges would also have been enhanced if response plans had been developed.

A. Costs

The 10-year PV cost of the proposed rule is approximately $99.44 million. Costs associated with these proposed regulations are the development of the actual hazardous substance response plans, as well as the costs of operating in compliance with the plan. In calculating costs, the Coast Guard used the estimate that 43% of facilities covered by these regulations are currently holding oil response plans required by 33 CFR part 154 subpart F, and will modify or add to these existing plans rather than develop entirely new plans. Consequently, these facilities have been credited with partial compliance with these proposed regulations. To the extent possible, costs reflect input from a range of industry sectors that will be directly or indirectly affected by these regulations. Unless otherwise specified, ''total cost'' reflects the aggregate cost to the entire industry affected by these proposed regulations. The Assessment breaks down costs by components. The following is a discussion of the different components considered for MTR facilities:

Baseline

The Coast Guard will take no action beyond existing regulations. By passing OPA 90, Congress indicated a preference for a statutory solution to oil and hazardous substance response planning for MTR facilities and vessels rather than a ''free market'' solution. Given that OPA 90 has been enacted, ''no action'' is essentially not a feasible alternative for MTR facilities and vessels.

Component A

The Coast Guard will require that response plans be developed for all facilities that transfer hazardous substances covered by the regulations. The plans must be consistent with associated national and area planning requirements and must include the following:

- General site information
- Designation of a QI with the authority to activate spill response resources
- Contact lists
- Training and drills
- Submission of plans
- Periodic updates as changes occur

Component B

Component B includes cost from the measures in component A, plus the costs from the following two measures:

- ''First Responders Guides'' or handbooks that provide instructions for initial response.
- Decision Support System to assist in responding to a spill and assessing the risk to the surrounding areas.

Alternative 1

Alternative 1 captures what is mandated by statute. In addition to components A and B, companies will be required to contract or provide by other approved means for spill response capabilities and have equipment deployment drills. This requirement will mirror that required in the oil response plan regulations but will be applied only to those substances that display oil-like characteristics (i.e., those that float on water).

B. Benefits

Based on the preferred alternative and assuming a 10-year PV, the amount of pollution averted is estimated at 23,300 barrels, while the avoided costs are estimated to be about $19.77 million. Anticipated benefits from these regulations include averted pollution, a reduction in injuries and property damage associated with hazardous substance discharges, the avoidance of costs incurred by both public and private entities directly involved in response operations, and reduction of impacts on populations located in the vicinity of such discharges.

The degree to which response operations would be improved was estimated by interviewing 11 subject matter experts who have been directly involved with responding to hazardous substance incidents. These interviewees represent facility and vessel owners or operators, local hazardous material response teams, U.S. Coast Guard Federal OSCs and Marine Safety Offices, and the U.S. Environmental Protection Agency.

Each interviewee was asked to estimate the level of effectiveness for each regulatory component. These estimates, ranging from minimal to significant impact on the efficiency of response operations, were averaged to develop an overall ''percent efficiency.'' This in turn reflects the percent to which costs of a response would be reduced and the amount of pollution that could be averted.

An indirect benefit applies to chemical release discharges not covered under these regulations. These regulations apply to worst case discharges and the threat of such discharges. In reality, the vast majority of these discharges occur during transfer operations and are not worst case discharges, and frequently involve chemicals not transferred in bulk or not covered by these regulations. Realizing that the benefit of the plans would be limited if they could be applied only to worst case discharges involving specific bulk hazardous substances, the Coast Guard designed these regulations with enough flexibility to be useful in guiding a wider range of chemical responses.

Small Entities

Under the Regulatory Flexibility Act (5 U.S.C. 601–612), we considered whether this proposed rule would have a significant economic impact on a substantial number of small entities. The term ''small entities'' comprises small businesses, not-for-profit organizations that are independently owned and operated and are not dominant in their fields, and governmental jurisdictions with populations of less than 50,000.

These regulations are not expected to significantly impact small businesses. No comments were made in response to an ANPRM and during two public meetings, and one workshop that expressed concerns about impacts on small entities. We contacted trade associations representing small businesses in the chemical manufacturing industry and received no indications that these regulations would adversely impact small entities. In total, chapter five of the Assessment estimates that these regulations would affect a maximum of 49 small entities.

The proposed regulations provide allowances to modify existing response plans and to take advantage of participation in industry cooperatives. Additionally, the Coast Guard is updating and making CHRIS available. This update would essentially provide affected parties with the hazardous-substance-specific information required in the regulations. For any company that believes it will be significantly affected, the regulations allow the company to request further flexibility in complying with the requirements.

Therefore, the Coast Guard certifies under 5 U.S.C. 605(b) that this proposed rule would not have a significant economic impact on a substantial number of small entities. If you think your business, organization, or governmental jurisdiction qualifies as a

small entity and that this rule would have a significant economic impact on it, please submit a comment to the Docket Management Facility at the address under **ADDRESSES.** In your comment, explain why you think it qualifies and how and to what degree this rule would economically affect it.

Assistance for Small Entities

Under section 213(a) of the Small Business Regulatory Enforcement Fairness Act of 1996 (Pub. L. 104–121), we want to assist small entities in understanding this proposed rule so that they can better evaluate its effects on them and participate in the rulemaking. If the rule would affect your small business, organization, or governmental jurisdiction and you have questions concerning its provisions or options for compliance, please consult LT Michael Roldan, Office of Operating and Environmental Standards (G–MSO), 202–267–0106; e-mail: mroldan1@comdt.uscg.mil.

Small businesses may send comments on the actions of Federal employees who enforce, or otherwise determine compliance with, Federal regulations to the Small Business and Agriculture Regulatory Enforcement Ombudsman and the Regional Small Business Regulatory Fairness Boards. The Ombudsman evaluates these actions annually and rates each agency's responsiveness to small business. If you wish to comment on actions by employees of the Coast Guard, call 1–888–REG–FAIR (1–888–734–3247).

Collection of Information

This proposed rule would call for a collection of information under the Paperwork Reduction Act of 1995 (44 U.S.C. 3501–3520). As defined in 5 CFR 1320.3(c), ''collection of information'' comprises reporting, recordkeeping, monitoring, posting, labeling, and other, similar actions. The title and description of the information collections, a description of those who must collect the information, and an estimate of the total annual burden follow. The estimate covers the time for reviewing instructions, searching existing sources of data, gathering and maintaining the data needed, and completing and reviewing the collection.

Title: Marine Transportation-Related Facility Response Plans for Hazardous Substances.

Summary of the Collection of Information: The Coast Guard has prepared and will seek approval for this collection of information under a consolidated collection which applies to these proposed regulations, proposed regulations for Tank Vessel Response Plans for Hazardous Substances as well as existing regulations for Vessel and Facility Oil Response Plans. This proposal contains collection of information requirements in §§ 154.2022 (What are the requirements for qualified individuals and alternate qualified individuals and what is their authority?); 154.2025 (When may I conduct hazardous substance transfer operations?); 154.2026 (How do I obtain interim operating authorization?); 154.2030 (May I augment an existing oil response plan with hazardous substance response information?); 154.2031 (How many copies of the plan must I have, and where must they be maintained?); 154.2032 (What are the required contents of a response plan?); 154.2035 (What are the required contents for each section of the plan?); 154.2055 (How must I certify that my response resource providers are capable of meeting plan requirements?); 154.2065 (What are the procedures for plan submission and approval?); 154.2070 (What are the procedures for plan review, revision, and resubmission?); 154.2072 (When must I resubmit my plan?); 154.2080 (How do I appeal a plan deficiency or COTP determination?); and 154.2085 (What are the procedures for submitting a request for acceptance of alternative planning criteria?).

Need for Information: This information is necessary to ensure that facilities transferring hazardous substances in bulk to or from vessels in U.S. waters are adequately prepared to respond to a hazardous substance incident.

Proposed Use of Information: In part, the purpose of the OPA 90 amendments to section 1321 of the FWPCA is to derive benefits anticipated to result from these regulations because of an increased level of preparedness and efficiency in conducting response operations. Anticipated benefits include averted pollution, reduced injuries and property damage associated with hazardous substance discharges, avoided costs incurred by both public and private entities directly involved in response operations, and minimized impact of the hazardous substance discharges when they occur in U.S. waters. Without the proposed requirements for facility response plans, it is possible that some owners or operators will not maintain the necessary internal resources (effective planning, training, exercises, *etc.*) or external resources (adequate shore-based response capability) to meet the requirements of these proposed regulations. The proposed collection of information requirements help monitor and ensure, through the submission and recurring update of response plans, that facilities conducting transfer operations in U.S. waters have appropriate response plans and response resources.

Submission of facility response plans to the U.S. Coast Guard for approval, the on-sight verification of an approved plan during routine facility inspections, and the maintenance of training and exercise records are the best way to ensure compliance.

Description of the Respondents: Owners and operators of facilities transferring hazardous substances in bulk to or from vessels in U.S. waters.

Number of Respondents: 225.

Frequency of Response: Response plan submitted every 5 years; notice of reviews completed annually; updates as necessary.

Burden of Response: A one-time burden of 44,502 hours for reporting and an annual recordkeeping burden of 4,504 hours for all respondents.

Estimated Total Annual Burden: One-time reporting burden of 198 hours per respondent and an annual recordkeeping burden of 20 hours per respondent.

As required by the Paperwork Reduction Act of 1995 (44 U.S.C. 3507(d)), we have submitted a copy of this proposed rule to the Office of Management and Budget (OMB) for its review of the collection of information.

We ask for public comment on the proposed collection of information to help us determine how useful the information is; whether it can help us perform our functions better; whether it is readily available elsewhere; how accurate our estimate of the burden of collection is; how valid our methods for determining burden are; how we can improve the quality, usefulness, and clarity of the information; and how we can minimize the burden of collection.

If you submit comments on the collection of information, submit them both to OMB and to the Docket Management Facility where indicated under **ADDRESSES**, by the date under **DATES.**

You need not respond to a collection of information unless it displays a currently valid control number from OMB. Before the requirements for this collection of information become effective, we will publish a notice in the **Federal Register** of OMB's decision to approve, modify, or disapprove the collection.

Federalism

We have analyzed this proposed rule under E.O. 13132 and have determined that this rule does not have implications for federalism under that Order.

However, we have consulted with interested State and local government officials and relevant representative national organizations and have received meaningful and timely input by those officials and organizations.

Unfunded Mandates Reform Act

The Unfunded Mandates Reform Act of 1995 (2 U.S.C. 1531–1538) governs the issuance of Federal regulations that require unfunded mandates. An unfunded mandate is a regulation that requires a State, local, or tribal government or the private sector to incur direct costs without the Federal Government's having first provided the funds to pay those costs. This proposed rule would not impose an unfunded mandate.

Taking of Private Property

This proposed rule would not effect a taking of private property or otherwise have taking implications under E.O. 12630, Governmental Actions and Interference with Constitutionally Protected Property Rights.

Civil Justice Reform

This proposed rule meets applicable standards in sections 3(a) and 3(b)(2) of E.O. 12988, Civil Justice Reform, to minimize litigation, eliminate ambiguity, and reduce burden.

Protection of Children

We have analyzed this proposed rule under E.O. 13045, Protection of Children from Environmental Health Risks and Safety Risks. This rule is not an economically significant rule and does not concern an environmental risk to health or risk to safety that may disproportionately affect children.

Environment

We considered the environmental impact of this proposed rule and concluded that preparation of an Environmental Impact Statement is not necessary. A draft Environmental Assessment and a draft Finding of No Significant Impact are available in the docket for inspection or copying where indicated under **ADDRESSES.**

The Environmental Assessment indicated that these regulations would not be expected to result in a significant impact on the environment. The Assessment analyzed the range of environmental impacts associated with several potential regulatory strategies considered by us, with a ''no action'' option as a baseline. A ''no action'' regulatory option would have adverse environmental impacts. Other regulatory options considered would result in positive impacts by mitigating environmental damage due to increasing response efficiencies. These damage reductions would be approximately 67% less than damages from the baseline. This estimate was established through interviews with individuals having substantial experience in the area of chemical response. No aspects of these regulations would be expected to result in adverse impacts on the environment. Cost reductions associated with environmental damage mitigation include those associated with environmental restoration and natural resources damages.

List of Subjects in 33 CFR Part 154

Incorporation by reference, Hazardous substances, Oil pollution, Reporting and recordkeeping requirements.

For the reasons discussed in the preamble, the Coast Guard proposes to amend 33 CFR part 154 as follows:

PART 154—OIL OR HAZARDOUS MATERIAL POLLUTION PREVENTION REGULATIONS FOR FACILITIES

1. The authority citation for part 154 continues to read as follows:

Authority: 33 U.S.C. 1231, 1321(j)(1)(C), (j)(5), (j)(6) and (m)(2); sec. 2, E.O. 12777, 56 FR 54757, 49 CFR 1.46. Subpart F is also issued under 33 U.S.C. 2735.

2. Add subpart J, consisting of §§ 154.2010 through 154.2085, to read as follows:

Subpart J—Response Plans for Hazardous Substances

Sec.

154.2010 What is the purpose of this subpart?
154.2015 Who must follow this subpart?
154.2016 What is the classification of my facility?
154.2017 How can I have my facility reclassified by the COTP?
154.2018 What are the basic submission requirements for my facility's response plan?
154.2020 What definitions apply to this subpart?
154.2021 What is a ''contract or other approved means''?
154.2022 What are the requirements for qualified individuals (QI) and alternate qualified individuals and what is their authority?
154.2025 When may I conduct hazardous substance transfer operations?
154.2026 How do I obtain interim operating authorization?
154.2030 May I augment an existing response plan with hazardous substance response information?
154.2031 How many copies of the plan must I have, and where must they be maintained?
154.2032 What are the required contents of a response plan?
154.2035 What are the required contents for each section of the plan?
154.2040 What appendices must I include in my plan?
154.2045 What inspections and maintenance must I conduct on response resources that I own or operate and are named in my plan?
154.2050 What are the operating criteria that apply to response resource equipment?
154.2055 How must I certify that my response resource providers are capable of meeting plan requirements?
154.2065 What are the procedures for plan submission and approval?
154.2070 What are the procedures for plan review, revision, and resubmission?
154.2072 When must I resubmit my plan?
154.2075 How will the Coast Guard notify me of deficiencies that may exist in my plan?
154.2076 When may my plan be declared invalid?
154.2080 How do I appeal a plan deficiency or COTP determination?
154.2085 What are the procedures for submitting a request for acceptance of alternative planning criteria?

§ 154.2010 What is the purpose of this subpart?

The purpose of this subpart is to establish hazardous substance response planning requirements for all marine transportation-related (MTR) facilities that transfer hazardous substances, in bulk, to or from a vessel. The development of response plans is intended to better prepare owners or operators to respond to a hazardous substance incident. The Coast Guard is not specifying the actions you need to take in case of an incident. Instead, we are specifying problem areas you must address during the planning process before an incident.

§ 154.2015 Who must follow this subpart?

You must follow this subpart if you own or operate an MTR facility that transfers, in bulk, to or from a vessel—

(a) A hazardous substance;

(b) A hazardous substance's isomer or hydrate; or

(c) A mixture or solution with 10% or more by weight of a single hazardous substance.

§ 154.2016 What is the classification of my facility?

(a) The Coast Guard classifies facilities identified in § 154.2015 as ''significant and substantial harm'' facilities because a discharge may cause significant and substantial harm to the environment.

(b) The Captain of the Port (COTP) may change the classification of a facility identified in § 154.2015 to or from ''substantial harm''. Before changing the classification of a facility

the COTP will consider, as a minimum, the following factors:

(1) The type and quantity of substance(s) handled.

(2) The spill history of the facility.

(3) The age of the facility.

(4) The public and commercial water supply intakes near the facility.

(5) The navigable waters near the facility. *Navigable waters* is defined in 33 CFR 2.05–25.

(6) The fish, wildlife, and sensitive environments.

§ 154.2017 How can I have my facility reclassified by the COTP?

The COTP will consider reclassifying your facility upon receiving a written request for reclassification. Your request must discuss those factors identified in § 154.2016(b).

§ 154.2018 What are the basic submission requirements for my facility's response plan?

(a) If you own or operate a facility identified in § 154.2017 as a significant and substantial harm facility, then you must submit your plan to the cognizant COTP for review and approval.

(b) If you own or operate a facility identified in § 154.2017 as a substantial harm facility, you must also submit your plan to the cognizant COTP, but it does not require COTP approval.

(c) Section 154.2065 provides specific procedures for plan submission and approval.

§ 154.2020 What definitions apply to this subpart?

As used in this subpart:

Adverse weather means the hydrographic, meteorological, and other environmental conditions that magnify the risk of an adverse impact to human health and the environment when a hazardous substance is discharged, and must be considered when identifying response resources in a response plan.

Bulk means any volume of a hazardous substance transferred to or from an integral tank of a vessel, and any volume of a hazardous substance transferred to or from a marine portable tank or independent tank while on board a vessel.

Captain of the Port (COTP) Zone means a zone specified in 33 CFR part 3 and, for coastal ports, the seaward extension of that zone to the outer boundary of the exclusive economic zone (EEZ).

Endpoint means the level or concentration in air, soil, or water of a hazardous substance below which human health and the environment should not be adversely impacted.

Federal On-Scene Coordinator (Federal OSC) means the Federal official pre-designated by the Coast Guard or Environmental Protection Agency (EPA) to coordinate and direct response efforts at the scene of a hazardous substance incident, as prescribed in the National Oil and Hazardous Substances Pollution Contingency Plan (National Contingency Plan (NCP)) published in 40 CFR part 300.

Fish and Wildlife and Sensitive Environments means areas that may be identified by either their legal designation or by Area Committees in applicable Area Contingency Plans (ACP) (for planning) or by members of the Federal OSC's spill response structure (during responses). These areas may include: wetlands, national and state parks, critical habitats for endangered or threatened species, wilderness and natural resource areas, marine sanctuaries and estuarine reserves, conservation areas, preserves, wildlife areas, wildlife refuges, wild and scenic rivers, areas of economic importance, recreational areas, national forests, Federal and state lands that are research areas, heritage program areas, land trust areas, and historical and archaeological sites and parks. These areas may also include unique habitats such as: Aquaculture sites and agricultural surface water intakes, bird nesting areas, critical biological resource areas, designated migratory routes, and designated seasonal habitats.

Floater means any hazardous substance whose physical and chemical properties, when discharged into water, result in a substance on the water surface that does not rapidly sink, react chemically with water, vaporize, or dissolve.

Great Lakes means Lakes Superior, Michigan, Huron, Erie, and Ontario, their connecting and tributary waters, the Saint Lawrence River as far as Saint Regis, and adjacent port areas.

Hazardous substance means any chemical that is listed in 40 CFR 116.4.

Hazardous substance operations means the transferring of any hazardous substance in bulk to or from a vessel in areas subject to the jurisdiction of the United States.

Incident means a discharge or a substantial threat of a discharge.

Independent tank means a cargo tank that is permanently affixed to the vessel, that is self-supporting, that incorporates no part of the vessel's hull and that is not essential to the integrity of the hull.

Inland area means either the area shoreward of the boundary lines defined in 46 CFR part 7, or in the Gulf of Mexico, the area shoreward of the lines of demarcation (COLREG lines) as defined in 33 CFR 80.740 through 80.850. The Great Lakes are not included in the inland area.

Integral tank means a cargo tank that also is part of, or is formed in part by, the vessel's hull structure so that the tank and the hull may be stressed by the same loads.

Interim operating authorization means authorization granted by the Coast Guard for a significant and substantial harm facility to conduct hazardous substance operations without having an approved plan.

Marine transportation-related facility (MTR facility) means all onshore terminal facilities including transfer hoses, loading arms, and in-line or breakout storage tanks needed for the continuous operation of a pipeline system, and other equipment used for the purpose of handling or transferring hazardous substances in bulk to or from a vessel, but excluding terminal exclusive hazardous substance storage facilities. If the storage facility has secondary containment, the MTR facility extends from the first valve inside a storage tank's secondary containment to the transfer system's connection with the vessel.

Nearshore area means either the area extending seaward 12 miles from the boundary lines defined in 46 CFR part 7, or, in the Gulf of Mexico, the area extending seaward 12 miles from the lines of demarcation (COLREG lines) as defined in 33 CFR 80.740 through 80.850.

Offshore area means the area from the outer boundary of the nearshore area seaward 38 nautical miles.

Open ocean area means the area from the outer boundary of the offshore area to the seaward boundary of the exclusive economic zone.

Operating area means any of the following: Rivers and canals, Great Lakes, Inland area, Nearshore area, Offshore area, or Open ocean area.

Personal protective equipment (PPE) means equipment that meets the requirements contained in 29 CFR 1910.120.

Portable tank means—

(a) An IM 101 portable tank or an IM 102 portable tank constructed in accordance with 49 CFR 178.270 through 178.272 and approved under 49 CFR 173.32a;

(b) A marine portable tank (MPT) that was inspected and stamped by the Coast Guard on or before September 30, 1992, and that meets the applicable requirements of 46 CFR parts 64 and 98; and

(c) A portable tank authorized for liquid hazardous materials, other than liquefied gases, by the Associate Administrator for Hazardous Materials

Safety (AAHMS), Research and Special Programs Administration, under an exemption issued in accordance with subpart B of 49 CFR part 107.

Response activity means any actions necessary to minimize or mitigate damage to human health, the environment, or property.

Response area means the area designated by the Federal OSC in which response activities are occurring.

Response resources means the personnel, equipment, supplies, and other capabilities necessary to perform response activities identified in the response plan.

Response resource provider means an entity that provides response personnel, equipment, supplies, or other capabilities necessary to perform response plan activities identified in a response plan.

Rivers and canals means bodies of water confined within the inland area. These include the Intracoastal Waterways and other waterways artificially created for navigation having a project depth of 12 feet or less.

Sinker means any hazardous substance whose physical and chemical properties, when discharged into water, result in a substance in the water that does not float, react chemically with water, rapidly vaporize, or rapidly dissolve.

Spill management team (SMT) means the personnel identified in a response plan who staff the organizational structure that manages response plan implementation. The term Incident Management Team may also be used.

Worst case discharge means the largest foreseeable hazardous substance discharge in adverse weather conditions.

§ 154.2021 What is a ''contract or other approved means''?

A ''contract or other approved means'' is any of the following methods used to meet the requirements contained in § 154.2035:

(a) A written contract with a response resource provider.

(b) A written certification that the personnel, equipment, and capabilities required by your response plan are available and are under your control.

(c) An active membership in a local or regional response resource provider.

(d) A document such as a letter, memorandum, or other form of written consent that specifies the agreement you have with a response resource provider and that the provider is capable of and intends to commit to meet your plan requirements. This document must give permission for the Coast Guard to verify the identified response resources and their capabilities through tests, inspections, and exercises.

(e) You have found another way you can comply with the requirements of this section and it is approved by the Commandant (G–MOR).

§ 154.2022 What are the requirements for qualified individuals (QI) and alternate qualified individuals and what is their authority?

(a) You must designate a QI and at least one alternate QI in your response plan. You may designate a third party organization to fulfill the role of the QI and alternate QI. The organization must identify a QI and at least one alternate QI. These individuals must be available at any time.

(b) QIs and alternate QIs must—

(1) Speak fluent English;

(2) Be located in the United States;

(3) Be familiar with the implementation of your plan; and

(4) Meet the training requirements contained in 29 CFR 1910.120(q)(6)(v), to include the capabilities contained in Appendix E, 29 CFR 1910.120, in the section entitled ''Suggested Training Curriculum Guidelines,'' in paragraph C.b.(5) entitled ''Incident commander.''

(c) You must designate each QI and alternate QI in writing. In your designation document you must specify that the QI—

(1) Has full authority to implement actions to contain, remove, or otherwise minimize or mitigate damage to the public health, the environment, and public property;

(2) Is able to immediately and continuously communicate with the Federal OSC and persons providing resources and equipment, as needed;

(3) Is authorized to engage in contracting and to obligate funds to carry out response activities; and

(4) Is adequately trained and experienced to carry out the responsibilities of the QI.

(d) The QI's liability is covered in 33 U.S.C. 1321(c)(4).

(e) As soon as is practicable after an incident, the QI will provide the Federal OSC with the name of the individual who will direct response activities and act as the owner or operator's incident commander. The QI may also be the incident commander.

§ 154.2025 When may I conduct hazardous substance transfer operations?

(a) If you submit a plan prior to [6 months after publication of the final rule], you may conduct hazardous substance operations pending receipt of interim operating authorization. You must conduct these operations consistent with your plan.

(b) If you are waiting for approval of a submitted plan and have received interim operating authorization from the COTP, then you may conduct hazardous substance operations for up to 2 years after the date your plan was submitted.

(c) Your facility may not continue to conduct hazardous substance operations if —

(1) You have not submitted a plan to the COTP prior to [6 months after publication of the final rule];

(2) The COTP determines that the response resources referenced in the plan do not substantially meet the requirements of this subpart;

(3) The contracts or agreements cited in your plan have lapsed or are otherwise no longer valid;

(4) You are not operating consistent with your plan;

(5) Your plan has not been resubmitted or approved within the last 5 years; or

(6) The interim operating authorization under paragraph (b) of this section has expired.

§ 154.2026 How do I obtain interim operating authorization?

To receive interim operating authorization, you must submit a written request with your plan to the COTP certifying that you have identified and ensured available, by contract or other approved means, the private response resources necessary to respond to a worst case discharge or substantial threat of such a discharge.

§ 154.2030 May I augment an existing response plan with hazardous substance response information?

Yes, you may augment an existing response plan with requirements that are specific to this subpart. The use of the National Response Team's Integrated Contingency Plan Guidance is also acceptable as long as you include items required by this subpart.

§ 154.2031 How many copies of the plan must I have, and where must they be maintained?

You must maintain a current copy of the plan at your facility and provide one to each QI and alternate QI named in the plan.

§ 154.2032 What are the required contents of a response plan?

(a) Your response plan must contain, in the same order unless supplemented by a cross-reference table, the following sections:

(1) General information.

(2) Notification procedures and list of contacts.

(3) Worst case discharge impact analysis.

(4) Facility discharge mitigation procedures.

(5) Facility response organization.

(6) Risk-based decision support process.

(7) Response resources.

(8) Training requirements.

(9) Exercise requirements.

(10) Appendices, including the following:

(i) Facility-specific information.

(ii) Hazardous substance-specific information.

(iii) Site-specific safety and health plan.

(iv) Disposal plan.

(b) Your plan must be consistent with the National Oil and Hazardous Substances Pollution Contingency Plan (NCP)(40 CFR part 300) and the Area Contingency Plan (ACP) in effect 6 months prior to the submission of your plan.

§ 154.2035 What are the required contents for each section of the plan?

(a) *General information.* This section of the plan must include—

(1) The facility's name, street address and mailing address (if different), city, county/parish, state, ZIP code, and facility telephone and facsimile numbers;

(2) Information regarding the facility's location described in a manner that would aid a reviewer and a responder in locating the facility;

(3) A table of contents or index of sufficient detail to allow any user to find a specific section of the plan; and

(4) A page showing a record of changes to record information on plan reviews, updates, or revisions.

(b) *Notification procedures and list of contacts.* (1) This section of your plan must include a prioritized list of individuals to be notified in the event of a hazardous substance incident and the notification procedures. The list must include names and 24-hour telephone or other contact numbers for all of the following:

(i) QI and alternate.

(ii) Incident commander (if other than the QI) who is capable of arriving at the incident command post, if established, or at the immediate vicinity of the incident within a reasonable time.

(iii) Facility owner or operator.

(iv) Facility response personnel.

(v) Spill management team.

(vi) Response resource providers.

(vii) Notifications required by 33 CFR part 153.

(viii) Federal, State, and designated local authorities.

(2) Your plan must include procedures to ensure that all notifications are made.

(3) Your plan must describe the primary and alternate methods of communication to be used during incidents, including notifications and communications at the facility and at remote locations within the areas covered by the response plan. You may refer to additional communications packages provided by the response resource providers. This section may reference another existing plan or document.

(4) Your plan must include a form, created by you, which contains information to be provided, if available, in any initial and follow-up notifications to Federal, State and designated local authorities. The form must include the phone number for the National Response Center (1–800–424–8802). The form must also contain a statement advising that initial notification must not be delayed pending collection of all information. Copies of the form must also be placed at the location(s) from which notifications are made. The following table represents the types of information, which must be collected on the form, if available:

Information categories	Types of information
(i) REPORTING PARTY	Name of individual or company.
	Address.
	Phone Number(s).
	Party reported incident to: USCG/EPA/Other Federal, State, or local agency.
(ii) SUSPECTED RESPONSIBLE PARTY	Name of company/individual/organization.
	Phone number(s).
	Type of company/individual/organization: Government (Federal/State/local), Private citizen, Private enterprise, Public utility.
(iii) INCIDENT DESCRIPTION	Address/location of incident.
	Cause and/or source of incident.
	City nearest incident.
	Date of incident.
	Facility capacity.
	Facility location: Latitude and longitude/mile post or river mile.
	Storage tank container type: Above or below ground.
	Tank capacity.
	Time of incident.
(iv) MATERIALS	Name of discharged substance.
	Quantity discharged.
	Quantity in water.
	Unit of measure.
(v) RESPONSE ACTION	Past, present, or future measures to correct or mitigate the incident.
(vi) IMPACT	Damage: Yes/no/unknown.
	Damage in dollars.
	Number of evacuations.
	Number of fatalities.
	Number of injuries.
(vii) ADDITIONAL INFORMATION	Any other information not previously provided.

(c) *Worst case discharge impact analysis.* This section of your plan must contain an analysis which will result in ''potentially impacted area'' diagrams that provide a reference tool for use in quickly assessing the impacts of each hazardous substance worst case discharge. Specific components of the analysis must include:

(1) *Planning volume calculation.* Use the following table to calculate the planning volume for each hazardous substance:

PLANNING VOLUME CALCULATION FOR A WORST CASE DISCHARGE

Item	Description
(i) TRANSFER SYSTEM TANK CAPACITY	Sum of the capacities of all in-line and break out tank(s) needed for the continuous operation of the transfer system.
(ii) PIPING DISCHARGE RATE	Calculate the discharge from the MTR facility's piping carrying a hazardous substance. The discharge from each pipe is calculated as follows: the maximum time to discover the discharge and shut down the flow from the pipe multiplied by the maximum flow rate. See note.
(iii) LEAKAGE AFTER SHUTDOWN	The total volume of the MTR facility's piping.
(iv) PLANNING VOLUME	TRANSFER SYSTEM TANK CAPACITY + PIPING DISCHARGE RATE + LEAKAGE AFTER SHUTDOWN.

Note to paragraph (c)(1) table: Based on the maximum relief valve setting or maximum system pressure when relief valves are not provided.

(2) *Identifying endpoints.* This step in the process requires the identification of endpoints for each hazardous substance. Endpoints can be obtained or derived from health guideline values from a recognized authority, including Federal or State agencies, professional associations, or scientific studies. You must assign air endpoints for each hazardous substance that produces a toxic or flammable airborne constituent. You must also assign water endpoints for each hazardous substance that produces a toxic condition or harmful pH level in the marine environment.

(3) *Determining the distance to air and water endpoints.* Endpoints are critical in determining distances, from the source of an incident, within which human health and the environment could expect to be adversely affected. In addition to the characteristics of the hazardous substances your plan addresses, distances to endpoints are affected by planning volumes and impact analysis parameters.

(i) For those substances that pose a threat by air, you must include the following parameters:

(A) Wind speed.

(B) Atmospheric stability class.

(C) Ambient temperature.

(D) Ambient humidity.

(E) Height of discharge.

(F) Surface roughness (urban, rural).

(G) Gas density.

(H) Temperature of substance during transfer.

(I) Location of incident. Assume the incident occurs at the point of transfer unless you determine that an alternate location presents greater risk. Values for parameters in paragraphs (c)(3)(i) (A) through (D) of this section can be of this section derived from historical data, while parameters in paragraphs (c)(3)(i) (E) through (H) of this section can be determined by actual conditions. Parameters listed in 40 CFR 68.22, paragraphs (b) through (g), for worst case discharge analysis, may also be used.

(ii) For those substances that pose a threat by water, you must include the following parameters:

(A) Water temperature.

(B) Tides (ebb and flood).

(C) Currents.

(D) Salinity.

(E) Wind speed.

(F) Ambient temperature.

(G) Ambient humidity.

(H) Location of incident. Assume the incident occurs at the point of transfer unless you determine that an alternate location presents greater risk. Values for parameters in paragraphs (c)(3)(ii) (A) through (G) of this section can be derived from historical data.

(iii) To determine the distance to each endpoint, you may use a methodology, model, or other technique that accounts for modeling conditions and reflects current industry standards. You may use proprietary models provided that you allow the Coast Guard access to the model and describe the model's features to local emergency planners, upon request.

(4) *Developing diagrams of impacted areas.* You must illustrate on a chart or map the area of impact, originating at the point of discharge, to each endpoint identified in paragraph (c)(2) of this section. This diagram may take into account the effects of physical or geographical obstructions.

(5) *Identifying receptors within impacted areas.* You must identify the potential public and environmental receptors within the impacted areas.

(i) Public receptors are population centers such as off-site residences, institutions (*e.g.,* schools, hospitals), industrial or commercial office buildings, drinking water intakes, parks, and recreational areas.

(ii) Environmental receptors are fish and wildlife and sensitive environments that should be identified in the Area Contingency Plan.

(iii) All of the public and environmental receptors must be indicated or otherwise referenced on the diagrams of impacted areas.

(d) *Facility discharge mitigation procedures.* This section of your plan must contain prioritized procedures necessary to protect the facility's personnel, and mitigate, control or prevent a hazardous substance incident resulting from hazardous substance operations. A copy of these procedures must be maintained at the facility's operations center or other appropriate location. Paragraphs (d)(1) through (3) of this section include the requirements for facility discharge mitigation procedures.

(1) All plans must include procedures for—

(i) Personnel safety, and if applicable, the use of personal protective equipment;

(ii) Facility personnel responsibilities by job title;

(iii) Facility personnel actions in the event of an incident involving the following scenarios:

(A) Failure of manifold, mechanical loading arm, other transfer equipment, or hoses, as appropriate.

(B) Tank overfill.

(C) Tank failure.

(D) Piping rupture.

(E) Piping leak, both under pressure and not under pressure.

(F) Explosion or fire.

(G) Equipment failure (*e.g.,* pumping system failure, relief valve failure, or other general equipment relevant to operational activities associated with internal or external facility transfers.); and

(iv) Facility personnel assigned to gather information that must be provided to response personnel.

(2) If your facility personnel will engage in incident mitigation measures or other response measures (beyond required notification), then include—

(i) The identification and description of responsibilities, and the activities that the personnel have been trained in and are qualified to conduct; and (ii) Facility responsibilities to mitigate a

hazardous substance incident. You must include procedures for use of equipment and personal protective equipment.

(3) If your facility personnel will sample or monitor air or water, then include personnel responsibilities for recordkeeping and sampling of hazardous substances involved in an incident, personal protective equipment requirements, and safety procedures during the sampling or monitoring operation.

(e) *Facility response organization.* This section of your plan must include the following:

(1) The authority and responsibilities of the QI. The authority must allow for immediate and continuous communication with the Federal OSC and notification and activation of the hazardous substance response resource provider(s).

(2) Procedures for transferring the responsibility for direction of response activities from the facility's personnel to the QI or incident commander, if other than the QI.

(3) Procedures for coordinating all response actions with the Federal OSC who oversees or directs those actions.

(4) The organizational structure to be used to manage response actions. You must include the following functional areas and list the responsibilities, duties and functional job descriptions for each:

(i) Command and control (incident commander).

(ii) Public information.

(iii) Safety.

(iv) Liaison with government agencies and other agencies as appropriate.

(v) Response operations.

(vi) Planning.

(vii) Logistics support.

(viii) Finance.

(5) You must list individuals, with the following specific technical specialties, who are available on a 24 hours-a-day basis for integration into the spill management team:

(i) Product specialist.

(ii) Toxicologist.

(iii) Chemist or chemical engineer.

(iv) Industrial hygienist.

(6) You will satisfy the requirements of paragraphs (e)(1) through (4) of this section if you design your spill management team per the U.S. Coast Guard-adopted National Inter-agency Incident Management System (NIIMS) Incident Command System (ICS).

(f) *Risk-based decision support process.* This section of your plan must outline processes which will help responders make decisions relating to the identification, evaluation, and control of risks to human health and the environment following a hazardous substance incident. These outlined processes do not need to be scenario specific, but can be generic in nature. This section of the plan may take the form of a decision tree, an automated decision support system, or any other format that meets the elements described in this paragraph. As a minimum, the process must include all of the following:

(1) *Risk identification* which describes the process which will be used to determine the extent and route of hazardous substance exposure to humans and the environment.

(2) *Risk evaluation* which describes the process which will be used to establish relative degrees of risk and prioritizing risks.

(3) *Risk control* which describes the process which will be used to determine which response methods are feasible to eliminate or reduce impacts of the hazardous substance incident on the humans and environment likely to be exposed.

(4) *Risk communication* which describes the process which will be used to communicate information resulting from paragraphs (f)(1), (2), and (3) of this section to parties internal and external to response activities.

(g) *Response resources.* This section must include the following information:

(1) You must ensure the availability by contract or other approved means of the following resources, adequate to conduct response operations for a worst case discharge, to be on-scene within the times indicated from the detection of an incident. You must list a 24-hour point of contact for each response resource provider.

(i) Air monitoring equipment per 29 CFR 1910.120—2 hours.

(ii) Water sampling equipment—2 hours.

(iii) Personal protective equipment—2 hours.

(iv) Modeling capabilities to include dispersion modeling (water and air)—2 hours.

(v) Firefighting resources—24 hours.

(A) If you determine that adequate local firefighting resources exist, then you do not have to ensure by contract this response resource.

(B) If you rely on local firefighting resources, then you must identify an individual located at the facility to coordinate with the local fire department and verify that adequately trained resources are retained for hazardous substance fires.

(C) The individual may be the QI as defined in § 154.2022 or another appropriate individual located at the facility.

(2) If you transfer a hazardous substance that is a ''floater,'' then you must ensure available, by contract or other approved means, response resource providers that are capable of providing the following services and equipment on-scene within 1 hour of detection of the incident. You must list a 24-hour point of contact for each provider of the following response resources:

(i) 1,000 ft of containment boom, or twice the length of the largest vessel that regularly conducts hazardous substance operations at your facility, whichever is greater.

(ii) The means of deploying and anchoring the boom.

(3) If you transfer a hazardous substance that is a ''floater,'' then you must list response resource providers that are capable of providing the following services and equipment on-scene within 12 hours of detection of the incident. You must list a 24-hour point of contact for each response resource provider.

(i) Recovery devices (including temporary storage).

(ii) 10,000 feet of inland boom for shoreline and wildlife and sensitive area protection operations. Resources, as required in approved oil response plans, will meet this requirement.

(4) If you transport a hazardous substance that is a ''sinker,'' then you must list response resource providers that are capable of providing the following services and equipment on-scene within 12 hours of detection of the incident. You must also list a 24-hour point of contact for each response resource provider.

(i) Sorbent boom, containment boom, silt curtains, or other equipment to contain hazardous substances that may remain floating on the surface or to reduce spreading on the bottom.

(ii) Dredges, pumps, or other equipment necessary to recover hazardous substances from the bottom and shoreline.

(iii) Chemical detection devices, such as sonar or sampling equipment.

(iv) In situ treatment equipment as deemed appropriate by the plan-holder.

(5) The listed response resource providers must meet the equipment criteria contained in § 154.2050. Response resource providers must provide trained personnel to operate equipment, and staff their organization and the spill management team for the first 7 days of the response.

(h) *Training requirements.* This section of your plan must describe the training procedures and programs.

(1) This section does not apply to the individuals listed in § 154.2035(e)(5).

(2) You must identify the training required for personnel having

responsibilities under the response plan.

(3) You must differentiate between training provided to vessel personnel and shore-based personnel.

(4) You must document the training of your personnel and make your training records available when requested by the Coast Guard. This applies to both initial and refresher training, as applicable. Records must be maintained for 3 years following completion of training.

(5) Nothing in this section relieves you from the responsibility to ensure that private shore-based response personnel are trained to meet the Occupational Safety and Health Administration (OSHA) standards for emergency response operations in 29 CFR 1920.120.

(i) *Exercise requirements.* This section of your plan addresses your exercise program. These exercises should help to ensure that your plan will function in an emergency. Your exercise program must detail the types of exercises, frequencies, scopes, objectives, and the scheme for exercising your entire response plan every 3 years. You must include announced and unannounced exercises in your plan.

(1) Minimum exercise requirements are:

Exercise type	Frequency	Comments
(i) Qualified individual notification	Quarterly.	
(ii) Emergency procedures	Optional.	
(iii) Spill management team tabletop	Annually	In a 3-year period, one exercise must include a worst case discharge scenario for hazardous substances. See note.
(iv) Response resource providers	Annually	See note.
(v) Owned and operated equipment	Semiannually.	
(vi) Entire response plan	Every 3 years	You must design your exercise program so that every component of the plan is exercised at least once every 3 years. You may exercise the components all at once. The components may be exercised via the required exercises or an area exercise.

Note to paragraph (i)(1) table: One of these exercises must be unannounced in the three year exercise cycle.

(2) You must participate in unannounced exercises, as directed by the COTP. The objectives of these exercises are to verify the ability and evaluate the performance of facility personnel in fulfilling their emergency-related responsibilities under the plan. These exercises will be limited to four per area per year. After participating in an unannounced exercise, you will not be required to participate in another unannounced exercise for at least 3 years from the date of the exercise.

(3) You must participate in area exercises as directed by the Federal OSC. The area exercises will involve those actions necessary to respond to the spill scenario developed by the exercise design team, of which you will be a member. After participating in an area exercise, you will not be required to participate in another area exercise for at least 6 years.

(4) You must maintain adequate exercise records as follows:

(i) Records of the QI notification exercises and the emergency procedures exercises must be maintained at the facility.

(ii) Exercise records must be available to the Coast Guard for 3 years following completion of the exercises.

(5) For holders of approved oil response plans augmented for hazardous substances, oil and hazardous substances exercises are interchangeable. However, a minimum of 25 percent to a maximum of 75 percent of all exercises must be for hazardous substances.

(6) You may satisfy the exercise response plan requirements by complying with the National Preparedness for Response Exercise Program (PREP) Guidelines. These guidelines are available from the United States Government Printing Office, North Capitol and H Sts., NW., Washington, DC 20402 or at their Web site: http://www.access.gpo.gov. You may also order a copy of the guidelines by mail or fax from TASC Dept Warehouse, 3341Q 75th Ave., Landover, MD 20785; fax: 301–386–5394. The publication number is USCG–X0191.

§ 154.2040 What appendices must I include in my plan?

You must include the following:

(a) *Facility-specific information appendix.* This appendix must contain a description of the facility's principal characteristics.

(1) There must be a physical description of the facility including a plan of the facility showing the mooring areas, transfer locations, control stations, locations of safety equipment, and the locations and capacities of all piping and storage tanks.

(2) The appendix must identify the sizes, types, and number of vessels that the facility can transfer hazardous substances to or from simultaneously.

(3) The appendix must identify or illustrate the MTR portion(s) of the facility.

(b) *Hazardous substance-specific appendix.* This section of the plan must include a separate appendix for each hazardous substance transferred to or from a vessel at your facility. The types of information, which must be included, if pertinent, may be found in the Coast Guard's Chemical Hazard Response Information System (CHRIS) manual.

(c) *Site-specific safety and health plan appendix.* This appendix must describe the safety and health plan to be implemented for any response location(s). It must provide as much information as is practicable in advance of an actual incident. This appendix may reference another existing plan required under 29 CFR 1910.120.

(d) *Disposal plan appendix.* This appendix must describe any actions to be taken or procedures to be used to ensure that all recovered hazardous substances and contaminated debris produced as a result of the incident are disposed of according to applicable Federal, State, and local requirements.

§ 154.2045 What inspections and maintenance must I conduct on response resources that I own or operate and are named in my plan?

(a) A facility owner or operator required to submit a response plan under this part must ensure that—

(1) Containment booms, skimmers, vessels, and other major equipment listed or referenced in the plan are periodically inspected and maintained in good operating condition, consistent with the manufacturers' recommendations, and best commercial practices; and

(2) All inspection and maintenance is documented and that these records are maintained for 3 years.

(b) For equipment that must be inspected and maintained under this section, the Coast Guard may—

(1) Verify that the equipment inventories exist as represented;

(2) Verify the existence of records required under this section;

(3) Verify that the records of inspection and maintenance reflect the actual condition of any equipment listed or referenced; and

(4) Inspect and require operational tests of equipment.

(c) This section does not apply to equipment ensured available from a response resource provider through written contract under § 154.2021(d).

§ 154.2050 What are the operating criteria that apply to response resource equipment?

(a) If you transfer a hazardous substance that is a ''floater'' or ''sinker,'' then the containment boom and recovery devices listed under § 154.2035(g) must meet the following criteria:

(1) Table 1 must be used to identify appropriate hazardous substance recovery devices in the response plan. These criteria reflect conditions used for planning purposes to select mechanical response equipment. They are not conditions that would limit response actions or affect a response vessel's normal operations. Table 1 follows:

TABLE 1.—RESPONSE RESOURCE OPERATING CRITERIA HAZARDOUS SUBSTANCE RECOVERY DEVICES

Operating area	Significant wave height [1] (in feet)	Sea State
Rivers and Canals	≤1	1
Inland	≤3	2
Great Lakes	≤4	2–3
Nearshore, Offshore, Open Ocean	≤6	3–4

[1] Recovery devices and boom must be at least capable of operating in wave heights up to and including the values listed in Table 1 for each operating area.

BOOM

Boom	Use			
	Rivers and canals	Inland	Great lakes	Nearshore, offshore, open ocean
Significant Wave Height	≤1	≤3	≤4	≤6
Sea State	1	2	2–3	3–4
Boom Height—in (draft plus freeboard)	6–18	18–24	18–24	≥24
Reserve Buoyancy to Weight Ratio	2:1	2:1	2:1	3:1 to 4:1
Total Tensile Strength—lbs	4,500	15–20,000	15–20,000	≥20,000
Skirt Fabric Tensile Strength—lbs	200	300	300	500
Skirt Fabric Tear Strength—lbs	100	100	100	125

(2) When evaluating operability of response equipment you must consider limitations identified in the Area Contingency Plans for the COTP zone in which your facility is located, to include—

(i) Ice conditions;

(ii) Debris;

(iii) Temperature ranges; and

(iv) Weather-related visibility.

(b) The COTP may reclassify a specific body of water or location within the COTP zone. Any reclassifications will be listed in the Area Contingency Plan. Reclassifications may be to—

(1) A more stringent operating area if the prevailing wave conditions exceed the significant wave height criteria during more than 35 percent of the year; or

(2) A less stringent operating area if the prevailing wave conditions do not exceed the significant wave height criteria during more than 35 percent of the year.

(c) Response equipment must—

(1) Meet or exceed the criteria listed in Table 1 of paragraph (a)(1) of this section;

(2) Be capable of functioning in the applicable operating area;

(3) Be appropriate for the hazardous substance carried; and

(4) Be periodically inspected and maintained consistent with the manufacturer's recommendations and best commercial practices. All inspections and maintenance must be documented and these records must be maintained for 3 years.

§ 154.2055 How must I certify that my response resource providers are capable of meeting plan requirements?

(a) Your plan must include the original written certification that—

(1) You have evaluated the risks associated with the worst case discharge of a hazardous substance you carry;

(2) You have contracted or listed, as appropriate, the resources that you have determined are necessary to effectively respond to a worst case hazardous substance discharge;

(3) The response resource providers you listed in your plan have acknowledged being listed; and

(4) You have determined that the technical expertise of the response resource providers is adequate to carry out the planned response requirements.

(b) This certification must be signed by the facility's owner or operator.

§ 154.2065 What are the procedures for plan submission and approval?

(a) You must submit one copy of your plan to the COTP for initial review and, if appropriate, approval. Your plan must—

(1) Include a statement certifying that your plan meets the requirements of this subpart; and

(2) Be submitted at least 60 days before your facility intends to perform hazardous substance operations.

(b) If your plan is approved, then the Coast Guard will send you an approval letter. Your plan will be approved for up

to 5 years from the date the plan was submitted.

(c) For a facility that has been reclassified under § 154.2016 as a substantial harm MTR facility, your plan will be valid for 5 years from the date the plan was submitted.

(d) If your plan is not approved, then you will receive written notification of your plan's deficiencies per § 154.2075. You must submit a revised plan or the corrected portions within the time period specified in the Coast Guard's notice.

(e) If you have received interim operating authorization per § 154.2025, then the deficiency provisions of § 154.2075 will also apply.

§ 154.2070 What are the procedures for plan review, revision, and resubmission?

(a) You must review your plan—

(1) Annually within 1 month of the anniversary date of the Coast Guard's approval of your plan; and

(2) After an exercise or hazardous substance incident to evaluate and validate the plan's effectiveness.

(b) Your review must incorporate any revisions to the plan, including listings of fish and wildlife and sensitive environments identified in the ACP in effect 6 months prior to plan review.

(c) After review of your plan, you must submit any amendments or revisions to the COTP for information or approval, as applicable. A cover page that provides a summary of the changes and the pages affected must be included with the revisions. The revised pages must be annotated with the revision number and effective date of the revision. Any changes must be noted on the record of changes page to include what changes were made and the date they were made. You must also note the completion of the annual review on the record of changes page.

(d) You must submit revisions or amendments to your plan to the COTP and all other holders of the response plan for information or approval at least 30 days in advance, whenever there is—

(1) A change in the owner if that owner did not provide the certifying statements required by § 154.2055(a) and § 154.2065(a)(1);

(2) A change in the operator if that operator did not provide the certifying statements required by § 154.2055(a) and § 154.2065(a)(1);

(3) A significant change in your facility's configuration that affects the information in your response plan;

(4) A change in the hazardous substances your facility transfers to or from a vessel that affects the response resource providers;

(5) A change in the name or capability of your response resource providers;

(6) A significant change in your facility's emergency response procedures;

(7) A change in the QI or alternate QI; or

(8) Any other changes that affect the implementation of the plan.

(e) You must submit certification as required by § 154.2055(a) and § 154.2065(a)(1) with all revisions or amendments.

(f) The COTP may require you to revise your response plan at any time as a result of a compliance inspection if the COTP determines that the response plan does not meet the requirements of this subpart or as the result of inadequacies noted in the response plan during an actual hazardous substance incident.

(g) The COTP will review the revisions submitted by you and will give written notice to you of any objections to the proposed revisions within 30 days of the date the revisions were submitted. The revisions shall become effective not later than 30 days from their submission to the COTP unless the COTP indicates otherwise as provided in § 154.2075.

(h) You must advise the Coast Guard and all other holders of the response plan of any revisions to personnel and telephone numbers and provide a copy of these revisions. Amendments to personnel and telephone number lists included in the response plan do not require prior Coast Guard approval, except as required in paragraph (c) of this section.

§ 154.2072 When must I resubmit my plan?

(a) You must resubmit your entire plan to the COTP—

(1) When the owner changes, if that owner provided the certifying statement required by § 154.2055;

(2) When the operator changes, if that operator provided the certifying statement required by § 154.2055;

(3) Six months prior to the expiration of your existing plan's approval; or

(4) For facilities that have been reclassified under § 154.2016, as substantial harm MTR facilities, within 6 months from the date of being reclassified.

(b) A new certifying statement must be submitted in each of these cases as required by § 154.2055.

§ 154.2075 How will the Coast Guard notify me of deficiencies that may exist in my plan?

The COTP will notify you in writing of any deficiencies noted during review of your response plan, revisions, amendments, drills observed by the Coast Guard, or inspection of equipment or records maintained in connection with this subpart.

§ 154.2076 When may my plan be declared invalid?

The COTP may declare your plan invalid, prohibiting you from conducting hazardous substance operations, if you fail to address any deficiency in your plan noted by the COTP.

§ 154.2080 How do I appeal a plan deficiency or COTP determination?

(a) If you disagree with a deficiency issued by the COTP, then you may appeal the deficiency to the COTP within seven days or the time specified by the COTP to correct the deficiency, whichever is less. This time commences from the date you receive the COTP notice.

(b) If you desire to appeal the classification that your facility could reasonably be expected to cause substantial harm or significant and substantial harm to the environment, then you must submit a written request to the COTP requesting review and reclassification. You must identify those factors the COTP should consider regarding reclassification of your facility including, but not limited to, those listed in § 154.2016. After considering all relevant material presented by you and any additional material available to the COTP, the COTP will notify you of the decision on the reclassification of your facility—

(1) Within 10 days of the COTP's decision, you may appeal it by writing to the District Commander via the COTP.

(2) Within 30 days of the District Commander's decision, you may appeal it by writing to Commandant (G–MOR), U.S. Coast Guard, 2100 Second Street SW., Washington, DC 20593–0001, via the COTP and District Commander.

(c) Unless you appeal the Coast Guard's decision, you must correct the response plan deficiencies or comply with the COTP's initial determination within the period specified.

(d) When considering an appeal, the COTP, District Commander, or Commandant may stay the effective date of the decision or action being appealed pending the determination of the appeal.

§ 154.2085 What are the procedures for submitting a request for acceptance of alternative planning criteria?

If you believe that national planning criteria contained elsewhere in this part are not applicable to your facility for the areas in which you wish to operate, then you may request the Coast Guard to accept alternative planning criteria. Your request must be made 90 days before you intend to conduct hazardous substance operations under the proposed alternative, and must be forwarded to Commandant (G-MOR), U. S. Coast Guard, 2100 Second Street, SW., Washington, DC 20593–0001, via the COTP and District Commander.

Dated: March 20, 2000.

J.C. Card,

Vice Admiral, U.S. Coast Guard, Acting Commandant.

[FR Doc. 00–7638 Filed 3–30–00; 8:45 am]

BILLING CODE 4910–15–U

Reader Aids

Federal Register

Vol. 65, No. 63

Friday, March 31, 2000

CUSTOMER SERVICE AND INFORMATION

Federal Register/Code of Federal Regulations

General Information, indexes and other finding aids	**202–523–5227**
Laws	**523–5227**
Presidential Documents	
Executive orders and proclamations	**523–5227**
The United States Government Manual	**523–5227**
Other Services	
Electronic and on-line services (voice)	**523–4534**
Privacy Act Compilation	**523–3187**
Public Laws Update Service (numbers, dates, etc.)	**523–6641**
TTY for the deaf-and-hard-of-hearing	**523–5229**

ELECTRONIC RESEARCH

World Wide Web

Full text of the daily Federal Register, CFR and other publications:

http://www.access.gpo.gov/nara

Federal Register information and research tools, including Public Inspection List, indexes, and links to GPO Access:

http://www.nara.gov/fedreg

E-mail

PENS (Public Law Electronic Notification Service) is an E-mail service for notification of recently enacted Public Laws. To subscribe, send E-mail to

listserv@www.gsa.gov

with the text message:

subscribe PUBLAWS-L your name

Use listserv@www.gsa.gov only to subscribe or unsubscribe to PENS. We cannot respond to specific inquiries.

Reference questions. Send questions and comments about the Federal Register system to:

info@fedreg.nara.gov

The Federal Register staff cannot interpret specific documents or regulations.

FEDERAL REGISTER PAGES AND DATE, MARCH

10931–11196 1
11197–11454 2
11455–11734 3
11735–11858 6
11859–12060 7
12061–12426 8
12427–12904 9
12905–13234 10
13235–13658 13
13659–13864 14
13865–14206 15
14207–14430 16
14431–14780 17
14781–15052 20
15053–15202 21
15203–15520 22
15521–15822 23
15823–16116 24
16117–16296 27
16297–16508 28
16509–16782 29
16783–17126 30
17127–17434 31

CFR PARTS AFFECTED DURING MARCH

At the end of each month, the Office of the Federal Register publishes separately a List of CFR Sections Affected (LSA), which lists parts and sections affected by documents published since the revision date of each title.

3 CFR

Proclamations:
7276 11197
7277 11199
7278 11455
7279 11733
7280 12903
7281 15201
7282 16507
7283 16509

Executive Orders:
12170 (See Notice of March 13, 2000) 13863
12957 (Continued by Notice of March 13, 2000) 13863
12959 (See Notice of March 13, 2000) 13863
13059 (See Notice of March 13, 2000) 13863
13146 11201
13147 13233

Administrative Orders:
Memorandum of January 5, 2000 15823

Presidential Determinations:
No. 2000-15 of February 24, 2000 10931
No. 2000-16 of February 29, 2000 15797
No. 2000-17 of March 2, 2000 15821
No. 2000-18 of March 16, 2000 16297

Notices:
March 13, 2000 13863

4 CFR

27 15203
28 15203

5 CFR

Ch. LXXIII 15825
213 14431
315 14431
335 14431
531 15875
532 15521
792 13659
2640 16511

Proposed Rules:
3 14477
213 14477
315 14477

7 CFR

2 12427
75 15830
205 13512
210 12429
215 12429
220 12429
225 12429
226 12429
301 11203
457 11457
600 14781
601 14781
729 16117
761 14432
762 14432
800 16783
868 16787
915 15203
916 15205
917 15205
993 12061
955 12442
985 15832
989 15214
1301 16118
1304 16118
1305 16118
1306 16118
1307 16118
1308 16118
1421 13865
1427 13865
1464 10933
1710 .....14207, 14785
1721 10933
3019 14406

Proposed Rules:
6 14478
20 11483
27 10979
28 .....10979, 12140
29 13915
57 14652
97 13917
201 12952
205 15579
360 14926
770 17206
930 15580
1140 10981
1160 14484
1205 12146
1210 14485
1306 12141
1307 12141
1309 12141
1710 12952
1717 12952
1718 12952
1823 17206
1956 17206

8 CFR

3 .....15835, 15846
212 .....14774, 15835, 15846
214 14774
240 .....15835, 15846
245 .....15835, 15846
248 14774

274a.....15835, 15846
278A 14774
299.....15835, 15846
340.....17127

9 CFR

74.....15216
78.....12064
93.....15216
94.....15521
130.....16122
424.....17128

Proposed Rules:

71.....11485
77 .....11485, 11912, 15877
78.....11485
93.....12486
98.....12486
113.....12151
130.....12486
317.....14486
318.....14486, 14489
319.....144867, 14489
327.....14489
381.....14486
590.....11486

10 CFR

72 .....11458, 12444, 14790, 16299
170.....11204
600.....14406
810.....16124
820.....15218
905.....16789

Proposed Rules:

21.....11488
50.....11488
52.....11488
54.....11488
100.....11488
170.....16250
171.....16250
430.....14128
431.....10984
960.....11755
963.....11755
Ch. XVIII 13700

11 CFR

108.....15221

Proposed Rules:

104.....16534
111.....16534
9038.....15273

12 CFR

5.....12905
201.....16802
204.....12916
208.....14810, 15050
225 .....14433, 14440, 15053, 16302, 16460
226.....17129
303.....15526
340.....14816
362.....15526
Ch. IX.....13663
563.....16302
563c.....16302
563g.....16302
701.....15224
724.....10933
745.....10933
925.....13866
950.....13866
1500.....16460
1501.....12064, 14819
1510.....15050

Proposed Rules:

3.....12320
8.....15111
208.....12320
225.....12320
325.....12320
563.....16350
563c.....16350
563g.....16350
567.....12320
614.....14491
620.....14494
709.....11250
716.....10988
741.....10988
742.....15275
1750.....13251

13 CFR

Proposed Rules:

120.....17132
124.....12955

14 CFR

25 .....13666, 16128, 16305
39.....10934, 10937, 10938, 11204, 11459, 11859, 11861, 12071, 12072, 12073, 12075, 12077, 12080, 12081, 12082, 12084, 12085, 12460, 12462, 12463, 13668, 13871, 13875, 13877, 14207, 14209, 14822, 14826, 14827, 14831, 14834, 14838, 14844, 14846, 14847, 14849, 14852, 15226, 15230, 15232, 15531, 15534, 15536, 15537, 15857, 15858, 16129, 16309, 16311, 16802, 16804
71 .....11369, 11461, 11866, 12630, 12917, 12918, 14344, 14855, 14856, 14857, 15859, 15860, 15861, 16130, 16131, 16808, 17133
91 .....16112, 16114, 16736
95.....14442
97 .....13669, 13671, 13673, 15540, 15541, 15544
121.....16736
135.....16736
255.....16808
1260.....14406

Proposed Rules:

25.....13703
35.....16542
39 .....11006, 11505, 11940, 11942, 12489, 12957, 13251, 13919, 13921, 13923, 14216, 14218, 15278, 15280, 15584, 15878, 15880, 15882, 16151, 16153, 16154, 16157, 16158, 16352, 16845, 17206, 17208
71 .....12153, 12957, 13704, 13705, 13707, 14497, 15282, 15586
108.....15113
109.....15113
111.....15113
129.....15113
191.....15113
255.....11009

15 CFR

14.....14406
734.....12919
736.....14858
738.....12919, 14857
740.....12919, 14857
742.....12919, 14857
743.....12919
744.....12919, 14444
748.....12919
756.....14857, 14861
762.....14858
766.....14862
770.....14857
774 .....12919, 13879, 14862
902.....16766

16 CFR

305.....16132
1615.....12924
1616.....12924
1630.....12929
1631.....12929
1632.....12935

Proposed Rules:

307.....11944
312.....11947
313.....11174

17 CFR

1.....12466
4.....10939, 12938
15.....14452
16.....14452
17.....14452
200.....12469
211.....16811
240.....13235
242.....13235

Proposed Rules:

4.....11253, 12318
228.....11507, 15043
229.....11507
230 .....11507, 15500, 16160
232.....11507
239.....11507, 15500
240.....11507, 16160
243.....16160
248.....12354
249.....11507, 16160
250.....11507
259.....11507
260.....11507
269.....11507
270.....11507, 15500
274.....11507, 15500

18 CFR

35.....12088
37.....17370
157 .....11461, 12115, 15234
380.....15234
1301.....16513

19 CFR

4.....16513
12.....12470
18.....16513
24.....13880
111.....13880
122.....16513
123.....16513
144.....16513
146.....16513
178.....13880

Proposed Rules:

101.....16354

20 CFR

220.....14458
322.....14459
401.....16811
402.....16811
404.....11866, 16811
410.....16811
416.....11866, 16811
422.....16811

21 CFR

10.....17134
12.....17134
20.....11881
101.....11205
173.....16312
176.....13675, 16518
177 .....15057, 16313, 16816, 17134
178 .....15545, 16314, 16315
510.....17134
524.....13904, 16817
558.....11888
640.....13678
801.....17135
803.....17135, 17136
807.....17135, 17136
812.....17136
814.....17136
820.....17135
860.....17136
862.....16520
864.....17138
866.....17138
868.....11464
870.....11465, 17138
872.....17138
874.....17138
876.....17138
878.....17138
884.....17138
886.....17138
888.....17138
897.....17135
1005.....17136
1010.....17136
1020.....17136
1040.....17136
1301.....13235
1308.....13235

Proposed Rules:

16.....16847
101.....14219
314.....12154
900.....16847

22 CFR

22.....14211
23.....14211
41.....14768
51.....14211
139.....14764
145.....14406
226.....14406

Proposed Rules:

22.....13253

23 CFR

1340.....13679

24 CFR

5.....16294, 16692
200.....15043
266.....16294
401.....15452

402 15452
880 16692
881 16692
884 16692
886 16692
891 16692
905 14422
960 16692
966 16692
982 ....16817, 16818, 16819
983 ....16818, 16819
984 16692
985 ....16692, 16823
Proposed Rules:
81 12632
201 17120
202 17120
990 11525
3280 17110

25 CFR
290 14461

26 CFR
1 ....11205, 11467, 12471, 15547, 15548, 15862, 16143, 16316, 16317, 16318, 16319, 17148
35 17148
40 17149
41 17149
47 17149
48 17149
145 17149
301 ....11211, 11215
601 15862
602 ....11205, 11211, 11215, 17148
Proposed Rules:
1 ....11012, 11269, 15587, 16545, 16546, 16554
48 17211
301 ....11271, 11272

27 CFR
4 11889
5 11889
7 11889
16 11889
75 15058
Proposed Rules:
00 15115
4 12490
70 15115
75 15115
90 15115

28 CFR
70 14406

29 CFR
95 14406
4022 ....14752, 14753
4044 ....13905, 14752
4050 14752
Proposed Rules:
1614 11019
1910 ....11948, 13254

30 CFR
202 11467
206 ....11467, 14022
250 ....14469, 15862
938 15553
Proposed Rules:
914 ....11950, 12492
934 17211
936 17213

31 CFR
103 13683

32 CFR
22 14406
32 14406
668 13906
776 15059
2001 16320

33 CFR
26 14863
95 14223
100 15558
110 11892
117 ....11893, 12943, 15238, 16521
127 10943
147 16823
140 14226
141 14226
142 14226
143 14226
144 14226
145 14226
146 14226
147 14226
154 10943
155 ....10943, 14470
159 10943
161 14863
164 10943
165 ....14864, 16522, 16826
167 12944
177 14223
183 10943
320 16486
326 16486
331 16486
Proposed Rules:
100 ....11274, 13926, 14498, 17355, 16358, 16554
110 ....13926, 14498, 16355, 16358, 16361, 16554
154 17416
165 ....13926, 14498, 14501, 14502, 15283, 15285, 16355, 16358, 16361
175 11410
177 11410
179 11410
181 11410
183 11410

34 CFR
74 14406
1100 11894
Proposed Rules:
606 15115
607 15115
608 15115

36 CFR
1 15077
3 15077
13 15077
701 ....11735, 11736
1194 17346
1210 14406
Ch. XV 14760
Proposed Rules:
212 11680
261 11680
295 11680
1190 12493
1191 12493
1280 15592

37 CFR
1 14864
Proposed Rules:
1 17215
201 ....14227, 14505

38 CFR
3 ....12116, 16827
19 14471
20 14471
21 ....12117, 13693
Proposed Rules:
3 13254

39 CFR
111 12946
Proposed Rules:
20 11023
111 ....13258, 16859
913 14229
952 13707

40 CFR
9 15090
30 14406
51 11222
52 ....10944, 11468, 12118, 12472, 12474, 12476, 12481, 12948, 13239, 13694, 14212, 14873, 15240, 15244, 15864, 16320
55 15867
60 13242
62 ....16320, 16323
63 ....11231, 15690
68 13243
70 16523
86 11898
130 17166
136 14344
141 11372
148 14472
180 ....10946, 11234, 11243, 11736, 12122, 12129, 15248, 16143, 17170
258 16523
261 14472
262 12378
268 14472
271 ....14472, 16528
300 ....13697, 14475
302 14472
431 15091
445 14344
Proposed Rules:
51 ....11024, 16364
52 ....11027, 11275, 11524, 12494, 12495, 12499, 12958, 13260, 13709, 14506, 14510, 14930, 15286, 15287, 15883, 16364, 16365, 16864, 17229, 17231
62 16365
63 11278
70 17231
81 14510
141 11372
152 15883
156 15884
180 17236
228 17240
271 16557
438 11755
503 11278
755 16094

41 CFR
302-51 16828
302-52 16828
302-54 16828
302-70 16828
302-71 16828
302-76 16828

42 CFR
121 15252
405 13911
410 13911
Proposed Rules:
410 13082
493 14510

43 CFR
12 14406
3500 11475

45 CFR
74 14406
400 15410
401 15410
612 11740
613 11740

46 CFR
28 10943
30 10943
32 10943
34 10943
35 10943
38 10943
39 10943
54 10943
56 10943
58 10943
61 10943
63 10943
76 10943
77 10943
78 10943
91 11904
92 10943
95 10943
96 10943
97 10943
105 10943
108 10943
109 10943
110 10943
111 10943
114 10943
115 11904
119 10943
125 10943
132 11904
133 11904
134 11904
151 10943
153 10943
154 10943
160 10943
161 10943
162 10943
163 10943
164 10943
170 10943

174 10943
175 10943
182 10943
189 11904
190 10943
193 10943
195 10943
199 ....10943, 11904
515 15252

Proposed Rules:

2 11410
10 11410
15 11410
24 11410
25 11410
26 11410
28 11410
30 11410
70 11410
90 11410
114 11410
169 11410
175 11410
188 11410
199 11410

47 CFR

1 14476
20 15559
22 15559
24 ....14213, 15559
25 16327
27 12483
32 16328
54 12135
64 16328
73 ....11476, 11477, 11750, 13250, 16149, 16335, 16336, 17179, 17180
76 ....12135, 15559
80 15559
90 15559
99 15559

Proposed Rules:

Ch. I 15599
1 13933
2 ....14230, 17246
26 14230
27 14230
54 13933
61 13933
69 13933
73 ....11537, 11538, 11539, 11540, 11541, 11955, 12155, 13260, 13261, 15600, 15885, 15886, 16160, 16366, 16558, 16559, 17248

48 CFR

Ch. 1 ....16285, 16286
Ch. 2 14380
Ch. 5 11246
1 16285
6 16285
9 16285
15 16285
19 16275
32 16276
52 ....16276, 16285
202 14397
204 14397
207 14397
208 ....14397, 14400
212 14400
222 ....14397, 14402
244 14400
247 14400
252 ....14397, 14400, 14402
1806 12484
1808 12484
1811 12484
1813 12484
1815 12484
1825 12484
1835 12484
1837 12484
1842 12484
1848 12484
1851 12484
2409 12950

Proposed Rules:

Ch. 9 13416
2 16758
3 16758
4 16758
9 16758
15 16758
52 16758

49 CFR

19 14406
193 10950
350 15092
355 15092
385 11904
571 11751
572 ....10961, 15254, 17180
587 17196

Proposed Rules:

Ch I. 11541
40 ....13261, 15118
171 11028
172 11028
173 11028
174 ....11028, 16161
175 11028
176 11028
177 ....11028, 16161
178 11028
179 11028
180 11028
190 15290
191 15290
192 15290
195 15290
222 ....15298, 16559
229 ....15298, 16559

50 CFR

17 ....14876, 14886, 14896, 16052
18 16828
300 14907
622 ....12136, 16336
635 15873
648 ....11478, 11909, 15110, 15576, 16341, 16345, 16532, 16844
660 ....11480, 16346
679 ....10978, 11247, 11481, 11909, 12137, 12138, 13698, 14918, 14924, 15271, 15272, 15577, 16150, 16532, 17204, 17205

Proposed Rules:

16 11756
17 ....12155, 12181, 13262, 13935, 14513, 14931, 14935, 15887, 16869
216 11542
223 12959
224 ....12959, 13935
300 13284
600 11956
622 ....11028, 14518
648 ....11029, 11956, 14519
679 ....11756, 11973, 12500

REMINDERS

The items in this list were editorially compiled as an aid to Federal Register users. Inclusion or exclusion from this list has no legal significance.

RULES GOING INTO EFFECT MARCH 31, 2000

COMMODITY FUTURES TRADING COMMISSION

Commodity pool operators and commodity trading advisors:
- Commodity pool operator definition; exclusion of certain otherwise regulated persons; published 3-1-00
- Correction; published 3-8-00

ENVIRONMENTAL PROTECTION AGENCY

Pesticides; tolerances in food, animal feeds, and raw agricultural commodities:
- Glufosinate ammonium; published 3-31-00

Water programs:
- Water quality planning and management; listing requirements; published 3-31-00

HEALTH AND HUMAN SERVICES DEPARTMENT

Food and Drug Administration

Food additives:
- Polymers—
  - Ethylene-vinyl acetate-vinyl alcohol copolymers; published 3-31-00

Medical devices:
- Cigarettes and smokeless tobacco products; restriction of sale and distribution to protect children and adolescents; revocation; published 3-31-00
- Information processing procedures; obtaining, submitting, executing, and filing of forms; change of address; published 3-31-00

JUSTICE DEPARTMENT

Immigration and Naturalization Service

Nationality:
- Naturalization grants; revocation; published 3-31-00

NATIONAL CREDIT UNION ADMINISTRATION

Credit unions:
- Trustees and custodians of pension plans; share insurance and appendix; published 3-1-00

TRANSPORTATION DEPARTMENT

Computer reservation systems, carrier-owned
- Expiration date extension; published 3-30-00

TRANSPORTATION DEPARTMENT

Federal Aviation Administration

Airworthiness directives:
- Eurocopter France; published 3-16-00
- Rolls-Royce plc; published 3-16-00

TRANSPORTATION DEPARTMENT

National Highway Traffic Safety Administration

Anthropomorphic test devices:
- Occupant crash protection—
  - Hybrid III test dummies; fifth percentile female adult dummy; design and performance specifications; published 3-1-00

TRANSPORTATION DEPARTMENT

Research and Special Programs Administration

Pipeline safety:
- Liquefied natural gas facilities; safety standards—
  - Liquefied natural gas production, storage, and handling standards; incorporation by reference; published 3-1-00

TREASURY DEPARTMENT

Internal Revenue Service

Excise taxes:
- Kerosene, aviation fuel, heavy trucks and trailers, and highway vehicle use taxes; taxable fuel measurement and reporting; published 3-31-00

COMMENTS DUE NEXT WEEK

AGRICULTURE DEPARTMENT

Agricultural Marketing Service

Cotton classing, testing, and standards:
- Classification services to growers; 2000 user fees; comments due by 4-7-00; published 3-8-00

Cotton research and promotion order:
- Imported content and cotton content of imported products; supplemental assessment calculation; comments due by 4-7-00; published 3-8-00

Meats, prepared meats, and meat products; grading, certification, and standards:
- Imported beef, lamb, veal, and calf carcasses; official grading; comments due by 4-3-00; published 2-1-00

AGRICULTURE DEPARTMENT

Animal and Plant Health Inspection Service

Plant-related quarantine, domestic:
- Asian longhorned beetle; comments due by 4-3-00; published 2-2-00

AGRICULTURE DEPARTMENT

Food and Nutrition Service

Child nutrition programs:
- National school lunch and school breakfast programs; alternatives to standard application and meal counting procedures; comments due by 4-7-00; published 2-7-00

COMMERCE DEPARTMENT

National Oceanic and Atmospheric Administration

International fisheries regulations:
- Antarctic marine living resources; harvesting and dealer permits, and catch documentation; comments due by 4-7-00; published 3-13-00

Marine mammals:
- Incidental taking—
  - Eastern Tropical Pacific Ocean; tuna purse seine vessels; compliance with International Dolphin Conservation Program; comments due by 4-3-00; published 1-3-00
  - Naval activities; USS Winston S. Churchill shock testing; comments due by 4-3-00; published 3-3-00

DEFENSE DEPARTMENT

Vocational rehabilitation and education:
- Veterans education—
  - Educational assistance; new criteria for approving courses; comments due by 4-3-00; published 2-2-00

ENERGY DEPARTMENT

Federal Energy Regulatory Commission

Natural gas companies (Natural Gas Act):
- Section 7 new service applications; optional certificate and abandonment procedures; comments due by 4-3-00; published 2-16-00

Practice and procedure:
- Public utilities; annual charges; comments due by 4-3-00; published 2-3-00

ENVIRONMENTAL PROTECTION AGENCY

Air programs; State authority delegations:
- Arizona; comments due by 4-3-00; published 3-2-00

Air quality implementation plans; approval and promulgation; various States:
- California; comments due by 4-3-00; published 3-2-00
- Illinois; comments due by 4-3-00; published 3-3-00

Hazardous wastes:
- Land disposal restrictions—
  - Polychlorinated biphenyls; underlying hazardous constituent in soil; Phase IV standards deferral; comments due by 4-3-00; published 2-16-00

Superfund program:
- National oil and hazardous substances contingency plan—
  - National priorities list update; comments due by 4-4-00; published 2-4-00

Water supply:
- National primary drinking water regulations—
  - Public water systems; unregulated contaminant monitoring regulation; comments due by 4-3-00; published 3-2-00
  - Public water systems; unregulated contaminant monitoring regulation; comments due by 4-3-00; published 3-2-00

FEDERAL COMMUNICATIONS COMMISSION

Radio stations; table of assignments:
- Montana; comments due by 4-3-00; published 2-25-00
- Texas; comments due by 4-3-00; published 2-23-00
- Wisconsin; comments due by 4-3-00; published 2-25-00

FEDERAL TRADE COMMISSION

Children's Online Privacy Protection Act; implementation

Safe harbor guidelines; comments due by 4-6-00; published 3-7-00

HEALTH AND HUMAN SERVICES DEPARTMENT

Medical care and examinations:

Indian health—

Indian Self-Determination Act; contracts; comments due by 4-3-00; published 2-1-00

INTERIOR DEPARTMENT

Fish and Wildlife Service

Endangered and threatened species:

Critical habitat determinations—

Coastal California gnatcatcher; comments due by 4-7-00; published 2-7-00

INTERIOR DEPARTMENT

Surface Mining Reclamation and Enforcement Office

Permanent program and abandoned mine land reclamation plan submissions:

Indiana; comments due by 4-6-00; published 3-7-00

JUSTICE DEPARTMENT

Drug Enforcement Administration

Records, reports, and exports of listed chemicals:

Red phosphorus; comments due by 4-3-00; published 2-2-00

JUSTICE DEPARTMENT

Privacy Act; implementation; comments due by 4-3-00; published 2-23-00

MANAGEMENT AND BUDGET OFFICE

Federal Procurement Policy Office

Acquisition regulations:

Cost Accounting Standards Board—

Cost accounting standards coverage; applicability, thresholds, and waivers; comments due by 4-7-00; published 2-7-00

MERIT SYSTEMS PROTECTION BOARD

Practice and procedure:

Uniformed Services Employment and Reemployment Rights Act and Veterans Employment Opportunities Act; implementation—

Appeals; comments due by 4-4-00; published 2-4-00

NATIONAL ARCHIVES AND RECORDS ADMINISTRATION

Records management:

Computer tapes, rewind requirement; elimination; comments due by 4-3-00; published 2-3-00

NATIONAL CREDIT UNION ADMINISTRATION

Credit unions:

Involuntary liquidation; adjudication of creditor claims; comments due by 4-3-00; published 3-2-00

NUCLEAR REGULATORY COMMISSION

Rulemaking petitions:

Barbour, Donald A.; comments due by 4-5-00; published 1-21-00

Spent nuclear fuel and high-level radioactive waste; independent storage; licensing requirements:

Approved spent fuel storage casks; list additions; comments due by 4-5-00; published 1-21-00

SECURITIES AND EXCHANGE COMMISSION

Securities:

Electronic Data Gathering, Analysis, and Retrieval System (EDGAR)—

Modernization; filing requirements; changes; comments due by 4-3-00; published 3-3-00

TRANSPORTATION DEPARTMENT

Coast Guard

Boating safety:

Personal flotation devices; Federal requirements for wearing; comments due by 4-3-00; published 10-5-99

Uninspected passenger vessels; comments due by 4-3-00; published 3-2-00

Outer Continental Shelf activities regulations; revision; comments due by 4-5-00; published 12-7-99

Practice and procedure:

Adjudicative procedures consolidation; comments due by 4-3-00; published 10-5-99

Vocational rehabilitation and education:

Veterans education—

New criteria for approving courses; comments due by 4-3-00; published 2-2-00

TRANSPORTATION DEPARTMENT

Workplace drug and alcohol testing programs:

Procedures; revision; comments due by 4-7-00; published 12-9-99

TRANSPORTATION DEPARTMENT

Federal Aviation Administration

Air carrier certification and operations:

Aviation security screening; comments due by 4-4-00; published 1-5-00

Airworthiness directives:

Boeing; comments due by 4-3-00; published 2-3-00

CFM International, S.A.; comments due by 4-3-00; published 3-3-00

Dornier; comments due by 4-6-00; published 3-7-00

Eurocopter Deutschland GMBH; comments due by 4-4-00; published 2-4-00

Lockheed; comments due by 4-3-00; published 2-16-00

McDonnell Douglas; comments due by 4-3-00; published 2-16-00

Class D and Class E airspace; comments due by 4-3-00; published 2-18-00

Class E airspace; comments due by 4-3-00; published 2-17-00

TREASURY DEPARTMENT

Alcohol, Tobacco and Firearms Bureau

Alcohol; viticultural area designations:

Lodi, CA; comments due by 4-7-00; published 2-7-00

TREASURY DEPARTMENT

Comptroller of the Currency

Electronic banking; facilitation of national banks' use of new technologies; advance notice; comments due by 4-3-00; published 2-2-00

TREASURY DEPARTMENT

Customs Service

Tariff-rate quotas:

Sugar-containing products; export certificates; comments due by 4-4-00; published 2-4-00

TREASURY DEPARTMENT

Internal Revenue Service

Excise taxes:

Deposits and tax returns; comments due by 4-6-00; published 1-7-00

Income taxes:

Credit for increasing research activities; comments due by 4-5-00; published 1-4-00

Procedure and administration:

Agriculture Department; return information disclosures for statistical purposes and related activities; cross reference; comments due by 4-3-00; published 1-4-00

TREASURY DEPARTMENT

Resolution Funding Corporation operations; comments due by 4-7-00; published 3-8-00

VETERANS AFFAIRS DEPARTMENT

Vocational rehabilitation and education:

Veterans educations—

New criteria for approving courses; comments due by 4-3-00; published 2-2-00

LIST OF PUBLIC LAWS

This is a continuing list of public bills from the current session of Congress which have become Federal laws. It may be used in conjunction with ''P L U S'' (Public Laws Update Service) on 202–523–6641. This list is also available online at http://www.nara.gov/fedreg.

The text of laws is not published in the **Federal Register** but may be ordered in ''slip law'' (individual pamphlet) form from the Superintendent of Documents, U.S. Government Printing Office, Washington, DC 20402 (phone, 202–512–1808). The text will also be made available on the Internet from GPO Access at http://www.access.gpo.gov/nara/index.html. Some laws may not yet be available.

S. 376/P.L. 106–180

Open-market Reorganization for the Betterment of International Telecommunications Act (Mar. 17, 2000; 114 Stat. 48)

Last List March 16, 2000

Public Laws Electronic Notification Service (PENS)

PENS is a free electronic mail notification service of newly enacted public laws. To subscribe, go to www.gsa.gov/archives/publaws-l.html or send E-mail to **listserv@www.gsa.gov** with the following text message:

SUBSCRIBE PUBLAWS-L Your Name.

Note: This service is strictly for E-mail notification of new laws. The text of laws is not available through this service. **PENS** cannot respond to specific inquiries sent to this address.