AUTHENTICATED U.S. GOVERNMENT INFORMATION GPO

Federal Register

2–3–00 Thursday
Vol. 65 No. 23 Feb. 3, 2000
Pages 5219–5406

The **FEDERAL REGISTER** is published daily, Monday through Friday, except official holidays, by the Office of the Federal Register, National Archives and Records Administration, Washington, DC 20408, under the Federal Register Act (44 U.S.C. Ch. 15) and the regulations of the Administrative Committee of the Federal Register (1 CFR Ch. I). The Superintendent of Documents, U.S. Government Printing Office, Washington, DC 20402 is the exclusive distributor of the official edition.

The **Federal Register** provides a uniform system for making available to the public regulations and legal notices issued by Federal agencies. These include Presidential proclamations and Executive Orders, Federal agency documents having general applicability and legal effect, documents required to be published by act of Congress, and other Federal agency documents of public interest.

Documents are on file for public inspection in the Office of the Federal Register the day before they are published, unless the issuing agency requests earlier filing. For a list of documents currently on file for public inspection, see http://www.nara.gov/fedreg.

The seal of the National Archives and Records Administration authenticates the Federal Register as the official serial publication established under the Federal Register Act. Under 44 U.S.C. 1507, the contents of the **Federal Register** shall be judicially noticed.

The **Federal Register** is published in paper and on 24x microfiche. It is also available online at no charge as one of the databases on GPO Access, a service of the U.S. Government Printing Office.

The online edition of the **Federal Register** is issued under the authority of the Administrative Committee of the Federal Register as the official legal equivalent of the paper and microfiche editions (44 U.S.C. 4101 and 1 CFR 5.10). It is updated by 6 a.m. each day the **Federal Register** is published and it includes both text and graphics from Volume 59, Number 1 (January 2, 1994) forward.

GPO Access users can choose to retrieve online **Federal Register** documents as TEXT (ASCII text, graphics omitted), PDF (Adobe Portable Document Format, including full text and all graphics), or SUMMARY (abbreviated text) files. Users should carefully check retrieved material to ensure that documents were properly downloaded.

On the World Wide Web, connect to the **Federal Register** at http://www.access.gpo.gov/nara. Those without World Wide Web access can also connect with a local WAIS client, by Telnet to swais.access.gpo.gov, or by dialing (202) 512-1661 with a computer and modem. When using Telnet or modem, type swais, then log in as guest with no password.

For more information about GPO Access, contact the GPO Access User Support Team by E-mail at gpoaccess@gpo.gov; by fax at (202) 512–1262; or call (202) 512–1530 or 1–888–293–6498 (toll free) between 7 a.m. and 5 p.m. Eastern time, Monday–Friday, except Federal holidays.

The annual subscription price for the **Federal Register** paper edition is $555, or $607 for a combined **Federal Register,** Federal Register Index and List of CFR Sections Affected (LSA) subscription; the microfiche edition of the **Federal Register** including the Federal Register Index and LSA is $220. Six month subscriptions are available for one-half the annual rate. The charge for individual copies in paper form is $8.00 for each issue, or $8.00 for each group of pages as actually bound; or $1.50 for each issue in microfiche form. All prices include regular domestic postage and handling. International customers please add 25% for foreign handling. Remit check or money order, made payable to the Superintendent of Documents, or charge to your GPO Deposit Account, VISA, MasterCard or Discover. Mail to: New Orders, Superintendent of Documents, P.O. Box 371954, Pittsburgh, PA 15250–7954.

There are no restrictions on the republication of material appearing in the **Federal Register.**

How To Cite This Publication: Use the volume number and the page number. Example: 65 FR 12345.

SUBSCRIPTIONS AND COPIES

PUBLIC	
Subscriptions:	
Paper or fiche	**202–512–1800**
Assistance with public subscriptions	**512–1806**
General online information	**202–512–1530; 1–888–293–6498**
Single copies/back copies:	
Paper or fiche	**512–1800**
Assistance with public single copies	**512–1803**
FEDERAL AGENCIES	
Subscriptions:	
Paper or fiche	**523–5243**
Assistance with Federal agency subscriptions	**523–5243**

Printed on recycled paper.

Contents

Federal Register

Vol. 65, No. 23

Thursday, February 3, 2000

Agriculture Department
See Animal and Plant Health Inspection Service
See Farm Service Agency
See Forest Service
See Natural Resources Conservation Service
See Rural Telephone Bank

Animal and Plant Health Inspection Service
RULES
Plant-related quarantine, domestic:
Fire ant, imported, 5221–5222
NOTICES
Animal welfare:
Farm animals used for nonagricultural purposes, 5301–5303
Meetings:
Exhibition animals; humane care and treatment, 5303–5305
Reports and guidance documents; availability, etc.:
Biotechnological/biological veterinary medicinal products; stability testing guideline, 5305–5306

Arts and Humanities, National Foundation
See National Foundation on the Arts and the Humanities

Centers for Disease Control and Prevention
NOTICES
Agency information collection activities:
Proposed collection; comment request, 5352–5353

Commerce Department
See Foreign-Trade Zones Board
See International Trade Administration
See National Oceanic and Atmospheric Administration
See Technology Administration

Commodity Futures Trading Commission
NOTICES
Contract market proposals:
Coffee, Sugar & Cocoa Exchange—
Peruvian coffee; discount, delivery port, etc., 5325–5326

Comptroller of the Currency
NOTICES
Agency information collection activities:
Submission for OMB review; comment request, 5392–5393

Defense Department
See Navy Department
NOTICES
Meetings:
President's Information Technology Advisory Committee, 5326–5327
U.S. Strategic Command Strategic Advisory Group, 5327

Education Department
NOTICES
Agency information collection activities:
Proposed collection; comment request, 5327–5328
Submission for OMB review; comment request; correction, 5328
Grants and cooperative agreements; availability, etc.:
Indian education programs—
Strengthening Institutions Program et al.; correction, 5328–5329
Postsecondary education—
Gaining Early Awareness and Readiness for Undergraduate Programs, 5329–5331

Energy Department
See Federal Energy Regulatory Commission

Environmental Protection Agency
RULES
Air quality implementation plans; approval and promulgation; various States:
California, 5259–5264
Maryland, 5245–5258
South Dakota, 5264–5266
PROPOSED RULES
Air quality implementation plans; approval and promulgation; various States:
Source specific plans--
Navajo Nation, AZ and NM; correction
[Editorial Note: This document, published at 65 FR 4244 in the Federal Register of January 26, 2000, was erroneously classified as a notice. It should have been classified as a proposed rule.]
Air quality implementation plans; approval and promulgation; various States:
California, 5297–5298
Maryland, 5296–5297
South Dakota, 5298
NOTICES
Superfund; response and remedial actions, proposed settlements, etc.:
Former Witter Co. Site, MO, 5340

Executive Office of the President
See Management and Budget Office
See Presidential Documents

Farm Credit Administration
PROPOSED RULES
Farm credit system:
Organization—
Termination of FCS charter to become financial institution under another Federal or State chartering authority; exit fee calculation, 5286–5289

Farm Credit System Insurance Corporation
NOTICES
Reports and guidance documents; availability, etc.:
Secure base amount and allocated insurance reserve accounts; policy statement, 5340–5348

Farm Service Agency
NOTICES
Meetings:
National Drought Policy Commission; hearing on policy, report to the President and Congress, 5306

Federal Aviation Administration
RULES
Air traffic operating and flight rules, etc.:
Grand Canyon National Park, AZ—
Special flight rules in vicinity (SFAR No. 50-2), 5395–5397
Airworthiness directives:
Airbus, 5243–5245
Boeing, 5222–5241
British Aerospace, 5228–5229
McDonnell Douglas, 5241–5243

Federal Communications Commission
RULES
Common carrier services:
Telecommunications Act of 1996: implementation—
Telemessaging, electronic publishing, and alarm monitoring services; clarification, etc., 5267–5268

Federal Energy Regulatory Commission
PROPOSED RULES
Practice and procedure:
Public utilities; annual charges, 5289–5295
NOTICES
Electric rate and corporate regulation filings:
West Fork Land Development Co., L.L.C., et al., 5333–5336
Environmental statements; availability, etc.:
Florida Gas Transmission Co., 5336–5337
Hydroelectric applications, 5337–5340
Applications, hearings, determinations, etc.:
ANR Pipeline Co., 5331
ARCO Products Co. et al., 5331–5332
Northwest Pipeline Corp., 5332
Tosco Corp., 5332
Ultramar Inc. et al., 5332–5333

Federal Highway Administration
NOTICES
Environmental statements; notice of intent:
Clark County, NV, 5388

Federal Maritime Commission
NOTICES
Agreements filed, etc., 5348–5349
Complaints filed:
Inlet Fish Producers, Inc., 5349
Ocean transportation intermediary licenses:
First Express International Corp. et al., 5349

Federal Reserve System
NOTICES
Agency information collection activities:
Proposed collection; comment request, 5349–5350
Banks and bank holding companies:
Formations, acquisitions, and mergers, 5350–5351
Permissible nonbanking activities, 5351

Fish and Wildlife Service
RULES
Endangered and threatened species:
Yreka phlox, 5268–5275
Marine mammals:
Incidental taking; authorization letters, etc.—
Oil and gas industry activities; polar bears and Pacific walruses, 5275–5278
PROPOSED RULES
Endangered and threatened species:
Findings on petitions, etc.—
Northern spotted owl, 5298–5300

Food and Drug Administration
NOTICES
Reports and guidance documents; availability, etc.:
Skin irritation and sensitization testing of generic transdermal drug products; industry guidance, 5353–5354

Foreign-Trade Zones Board
NOTICES
Applications, hearings, determinations, etc.:
Florida
RP Scherer Corp.; gelatin capsule manufacturing facilities, 5308

Forest Service
NOTICES
Environmental statements; notice of intent:
Salmon-Challis National Forest, ID, 5307

Health and Human Services Department
See Centers for Disease Control and Prevention
See Food and Drug Administration
See Health Care Financing Administration
See National Institutes of Health
See Substance Abuse and Mental Health Services Administration
NOTICES
Committees; establishment, renewal, termination, etc.:
Minority Health Advisory Committee, 5351–5352

Health Care Financing Administration
NOTICES
Agency information collection activities:
Proposed collection; comment request, 5354–5355

Housing and Urban Development Department
RULES
Mortgage and loan insurance programs:
Home equity conversion mortgage insurance; condominium associations; right of first refusal, 5405–5406
NOTICES
Agency information collection activities:
Proposed collection; comment request, 5360–5365
Grants and cooperative agreements; availability, etc.:
Public Housing Drug Elimination Program Gun Buyback Violence Reduction Initiative, 5399–5403

Interior Department
See Fish and Wildlife Service
See Land Management Bureau
See National Park Service
See Reclamation Bureau

International Trade Administration
NOTICES
Antidumping:
Antifriction bearings (other than tapered roller bearings) and parts from—
Various countries, 5309–5310
Circular welded carbon steel pipes and tubes from—
Taiwan, 5310–5311
Porcelain-on-steel cookware from—
Mexico, 5311

Silicon metal from—
Argentina, 5311–5312
Sparklers from—
China, 5312–5315
Stainless steel wire rods from—
Brazil, 5319–5322
France, 5317–5319
India, 5315–5317
Antidumping and countervailing duties:
Five-year sunset reviews—
Initiation of reviews, 5308–5309
Applications, hearings, determinations, etc.:
University of—
Massachusetts, 5322

International Trade Commission
NOTICES
Import investigations:
Carbon steel wire rod from—
Argentina, 5368–5369
Compact ductile iron waterworks fittings from—
China, 5369
Cotton shop towels from—
Various countries, 5369
Creatine monohydrate from—
China, 5369–5370
Electric power services; recent reforms in selected foreign markets, 5370–5371
Excimer laser systems for vision correction surgery and components and methods for performing such surgery, 5371
Glycine from—
China, 5371–5373
Production sharing; use of U.S. components in foreign assembly operations (1995-1998), 5373–5374
Semiconductor memory devices and products containing same, 5374–5375
Meetings; Sunshine Act, 5375

Land Management Bureau
NOTICES
Survey plat filings:
Arizona, 5365

Management and Budget Office
NOTICES
Balanced Budget and Emergency Deficit Control Reaffirmation Act (Gramm-Rudman-HolLings):
Sequestration update report; transmittal to President and Congress, 5378

National Aeronautics and Space Administration
NOTICES
Meetings:
Advisory Council
Space Science Advisory Committee, 5375

National Archives and Records Administration
PROPOSED RULES
Records management:
Computer tapes, rewind requirement; elimination, 5295–5296

National Foundation on the Arts and the Humanities
NOTICES
Meetings:
Humanities Panel, 5375

National Institutes of Health
NOTICES
Agency information collection activities:
Submission for OMB review; comment request, 5355–5357
Meetings:
Minority Health Research Advisory Committee, 5357
National Institute of Arthritis and Musculoskeletal and Skin Diseases, 5358
National Institute of General Medical Sciences, 5357–5358
National Institute on Alcohol Abuse and Alcoholism, 5357
National Institute on Drug Abuse, 5358–5359
Reports and guidance documents; availability, etc.:
Human pluripotent stem cells; research guidelines, 5359

National Oceanic and Atmospheric Administration
RULES
Fishery conservation and management:
Alaska; fisheries of Exclusive Economic Zone—
Atka mackerel, 5284–5285
Pollock, 5278–5285
PROPOSED RULES
Fishery conservation and management:
Caribbean, Gulf, and South Atlantic fisheries—
South Atlantic Fishery Management Council; hearings, 5300
NOTICES
Environmental statements; availability, etc.:
Incidental take permits—
Oregon and Washington Fish and Wildlife Departments; salmonids, 5322–5323
Meetings:
New England Fishery Management Council, 5323–5324

National Park Service
NOTICES
Environmental statements; notice of intent:
Point Reyes National Seashore, CA, 5365–5366
Management and land protection plans; availability, etc.:
Point Reyes National Seashore, CA; fire management, 5366–5367
Meetings:
Denali National Park and Preserve Subsistence Resource Commission, 5367
Kenilworth Park, Washington, DC; clean up and planning for use of park, 5367
Wrangell-St. Elias National Park Subsistence Resource Commission, 5367–5368

National Science Foundation
NOTICES
Antarctic Conservation Act of 1978; permit applications, etc., 5375–5376

Natural Resources Conservation Service
NOTICES
Field office technical guides; changes:
Indiana, 5307

Navy Department
NOTICES
Patent licenses; non-exclusive, exclusive, or partially exclusive:
Thiokol Propulsion, 5327

Nuclear Regulatory Commission
NOTICES
Meetings:
Nuclear Waste Advisory Committee, 5377
Solid materials control; staff working group, 5377–5378
Applications, hearings, determinations, etc.:
Vermont Yankee Nuclear Power Corp., 5376–5377

Office of Management and Budget
See Management and Budget Office

Presidential Documents
PROCLAMATIONS
Special observances:
Heart Month, American (Proc. 7271), 5219–5220

Public Health Service
See Centers for Disease Control and Prevention
See Food and Drug Administration
See National Institutes of Health
See Substance Abuse and Mental Health Services Administration

Reclamation Bureau
NOTICES
Meetings:
CALFED Bay-Delta Program Policy Group, 5368

Research and Special Programs Administration
NOTICES
Hazardous materials:
Applications; exemptions, renewals, etc., 5388–5392

Rural Telephone Bank
NOTICES
Meetings; Sunshine Act, 5307–5308

Securities and Exchange Commission
NOTICES
Agency information collection activities:
Submission for OMB review; comment request, 5378–5380
Self-regulatory organizations; proposed rule changes:
Pacific Exchange, Inc., 5383–5384
Applications, hearings, determinations, etc.:
Lincoln National Life Insurance Co. et al., 5380–5383

State Department
NOTICES
Grants and cooperative agreements; availability, etc.:
Language and Culture Enrichment Program, 5384–5386

Substance Abuse and Mental Health Services Administration
NOTICES
Agency information collection activities:
Proposed collection; comment request, 5359–5360

Surface Transportation Board
NOTICES
Railroad operation, acquisition, construction, etc.:
Laidlaw Inc. et al., 5392

Technology Administration
NOTICES
Grants and cooperative agreements; availability, etc.:
Technology Administration Fellows Program, 5324–5325

Transportation Department
See Federal Aviation Administration
See Federal Highway Administration
See Research and Special Programs Administration
See Surface Transportation Board
NOTICES
Agency information collection activities:
Proposed collection; comment request, 5386–5387
Aviation proceedings:
Agreements filed; weekly receipts, 5387
Certificates of public convenience and necessity and foreign air carrier permits; weekly applications, 5387
Hearings, etc.—
Ameristar Air Cargo, Inc., 5387–5388
Atlantic Coast Jet, Inc., 5387

Treasury Department
See Comptroller of the Currency

Separate Parts In This Issue

Part II
Department of Transportation, Federal Aviation Administration, 5395–5397

Part III
Department of Housing and Urban Development, 5399–5403

Part IV
Department of Housing and Urban Development, 5405–5406

Reader Aids
Consult the Reader Aids section at the end of this issue for phone numbers, online resources, finding aids, reminders, and notice of recently enacted public laws.

CFR PARTS AFFECTED IN THIS ISSUE

A cumulative list of the parts affected this month can be found in the Reader Aids section at the end of this issue.

3 CFR

Proclamations:

7271 5219

7 CFR

301 5221

12 CFR

Proposed Rules:

611 5286

14 CFR

39 (7 documents) 5222, 5228, 5229, 5235, 5238, 5241, 5243

91 5396

93 5396

121 5396

135 5396

18 CFR

Proposed Rules:

382 5289

24 CFR

206 5406

36 CFR

Proposed Rules:

1234 5295

40 CFR

52 (5 documents) 5245, 5252, 5259, 5262, 5264

Proposed Rules:

52 (5 documents) ... 5296, 5297, 5298

47 CFR

Ch. I 5267

50 CFR

17 5268

18 5275

679 (5 documents) 5278, 5283, 5284, 5285

Proposed Rules:

17 5298

622 5299

Federal Register
Vol. 65, No. 23
Thursday, February 3, 2000

Presidential Documents

Title 3—

The President

Proclamation 7271 of February 1, 2000

American Heart Month, 2000

By the President of the United States of America

A Proclamation

In the past half century, our Nation has made enormous progress in the fight against heart disease. Through careful research, scientists and doctors have identified key factors—including smoking, high blood pressure, high blood cholesterol, diabetes, obesity, and physical inactivity—that increase the risk of heart disease. Working with dedication and determination, they have developed new treatments and procedures, such as cardiopulmonary resuscitation, defibrillation, clot-dissolving medicines, angioplasty, and cardiac imaging devices, that have saved many lives. As a result of these advances, the death rate from coronary heart disease has fallen dramatically in our Nation, with a nearly 60-percent reduction since its peak in the mid-1960s.

While these developments are significant, heart disease remains a serious health problem. Despite our knowledge of the importance of exercise and a proper diet to maintaining a healthy heart, studies indicate that both physical inactivity and obesity are on the rise throughout our country. Today, more than 58 million Americans have one or more types of cardiovascular disease (CVD), and each year nearly 1 million Americans die from CVD—more than from the next 7 leading causes of death combined. Furthermore, rates of coronary heart disease deaths and the prevalence of some risk factors remain disproportionately high in minority and low-income populations.

As we stand at the dawn of this new century, it is crucial that we build on the developments of the last century to reduce the incidence of CVD, to address the disparity among various segments of our population, and to make further progress in the fight against heart disease. To help meet this challenge, my Administration has launched the *Healthy People 2010* initiative, which addresses health problems that can be prevented through better care and increased public awareness. Among the initiative's ambitious goals are improving the prevention, detection, and treatment of heart disease risk factors, earlier identification and quicker response in the treatment of heart attacks, and prevention of recurrent cardiovascular events, such as second strokes.

The work of researchers at the National Human Genome Research Institute of the National Institutes of Health (NIH) also holds great promise for the fight against heart disease. With the completion of their monumental project of mapping and sequencing all human chromosomes, we will soon have the capability to identify at birth all those who are genetically predisposed to heart disease and provide them with the treatment and guidance they need through the years to live longer, healthier lives.

The Federal Government will continue to support research and public education to improve heart health through the National Heart, Lung, and Blood Institute, also at NIH. And all Americans should remain grateful that the American Heart Association, through its research and education programs and its vital network of dedicated volunteers, maintains a crucial role in bringing about much-needed advances in the prevention and treatment of heart disease.

In recognition of the importance of the ongoing fight against cardiovascular disease, the Congress, by Joint Resolution approved December 20, 1963 (77 Stat. 843; 36 U.S.C. 101b), has requested that the President issue an annual proclamation designating February as ''American Heart Month.''

NOW, THEREFORE, I, WILLIAM J. CLINTON, President of the United States of America, do hereby proclaim February 2000 as American Heart Month. I invite the Governors of the States, the Commonwealth of Puerto Rico, officials of other areas subject to the jurisdiction of the United States, and the American people to join me in reaffirming our commitment to combating cardiovascular disease and strokes.

IN WITNESS WHEREOF, I have hereunto set my hand this first day of February, in the year of our Lord two thousand, and of the Independence of the United States of America the two hundred and twenty-fourth.

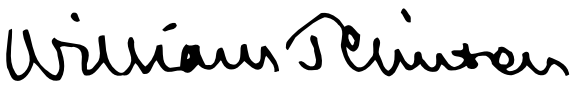

[FR Doc. 00–2538
Filed 2–2–00; 8:45 am]
Billing code 3195–01–P

Rules and Regulations

Federal Register
Vol. 65, No. 23
Thursday, February 3, 2000

This section of the FEDERAL REGISTER contains regulatory documents having general applicability and legal effect, most of which are keyed to and codified in the Code of Federal Regulations, which is published under 50 titles pursuant to 44 U.S.C. 1510.

The Code of Federal Regulations is sold by the Superintendent of Documents. Prices of new books are listed in the first FEDERAL REGISTER issue of each week.

DEPARTMENT OF AGRICULTURE

Animal and Plant Health Inspection Service

7 CFR Part 301

[Docket No. 98–125–2]

Imported Fire Ant; Quarantined Areas and Treatment

AGENCY: Animal and Plant Health Inspection Service, USDA.

ACTION: Affirmation of interim rule as final rule.

SUMMARY: We are adopting as a final rule, without change, an interim rule that amended the imported fire ant regulations by designating as quarantined areas all or portions of three counties in California, two counties in Georgia, one county in New Mexico, four counties in North Carolina, and one county in Tennessee. As a result of the interim rule, the interstate movement of regulated articles from those areas is restricted. The interim rule was necessary to prevent the artificial spread of the imported fire ant to noninfested areas of the United States. The interim rule also amended the treatment provisions in the Appendix to the imported fire ant regulations by removing all references to the granular formulation of chlorpyrifos because it is no longer marketed for the treatment of grass sod or woody ornamentals.

EFFECTIVE DATE: The interim rule became effective on May 21, 1999.

FOR FURTHER INFORMATION CONTACT: Mr. Ronald P. Milberg, Operations Officer, Program Support, PPQ, APHIS, 4700 River Road Unit 134, Riverdale, MD 20737–1236; (301) 734–5255.

SUPPLEMENTARY INFORMATION:

Background

In an interim rule effective and published in the **Federal Register** on May 21, 1999 (64 FR 27657–27660, Docket No. 98–125–1), we amended the imported fire ant (IFA) regulations in 7 CFR part 301 by designating as quarantined areas all or portions of three counties in California, two counties in Georgia, one county in New Mexico, four counties in North Carolina, and one county in Tennessee. We also amended the treatment provisions in the Appendix to the IFA regulations by removing all references to the granular formulation of chlorpyrifos.

Comments on the interim rule were required to be received on or before July 20, 1999. We did not receive any comments. Therefore, for the reasons given in the interim rule, we are adopting the interim rule as a final rule.

This action also affirms the information contained in the interim rule concerning Executive Orders 12866, 12372, and 12988, and the Paperwork Reduction Act.

Further, for this action, the Office of Management and Budget has waived the review process required by Executive Order 12866.

Regulatory Flexibility Act

This rule affirms an interim rule that amended the IFA regulations by designating all or portions of the following counties as quarantined areas: Los Angeles, Orange, and Riverside Counties in California; Habersham and White Counties in Georgia; Dona Ana County in New Mexico; Bertie, Chowan, Martin, and Perquimans Counties in North Carolina; and Madison County in Tennessee. The interim rule was necessary because surveys conducted by APHIS and State and county agencies revealed that IFA has spread to these areas. As a result, the interstate movement of regulated articles from these areas is restricted.

The following analysis addresses the economic effect of this rule on small entities, as required by the Regulatory Flexibility Act.

There are approximately 3,227 agricultural entities in the newly regulated areas with annual sales totaling almost $3.8 billion. We have identified approximately 905 affected entities in the newly regulated areas, including nurseries, sod and hay growers, farm equipment dealers, landscaping companies, and construction companies. The majority of these entities would be considered small businesses. In 1997, the market value of crop sales for the affected entities was more than $467,262,000. We do not know how many of the affected entities move regulated articles interstate; however, the availability of various IFA treatments, which permit the interstate movement of regulated articles with only a small additional cost, minimizes any adverse economic effects due to the interim rule. The average cost for treating a 1 gallon container, which contains one nursery plant, is 2 cents. The average treatment cost for a standard shipment of 10,000 nursery plants, worth anywhere between $10,000 and $250,000, is $200. Entities that do not move regulated articles interstate remain unaffected by the interim rule.

The interim rule also amended the treatment provisions in the Appendix to the IFA regulations by removing all references to the granular formulation of chlorpyrifos because it is no longer marketed for the treatment of grass sod or woody ornamentals. Removing all references to granular chlorpyrifos in the Appendix to the IFA regulations will not have any economic effect on affected entities.

Under these circumstances, the Administrator of the Animal and Plant Health Inspection Service has determined that this action will not have a significant economic impact on a substantial number of small entities.

List of Subjects in 7 CFR Part 301

Agricultural commodities, Plant diseases and pests, Quarantine, Reporting and recordkeeping requirements, and Transportation.

PART 301—DOMESTIC QUARANTINE NOTICES

Accordingly, we are adopting as a final rule, without change, the interim rule that amended 7 CFR part 301 and that was published at 64 FR 27657–27660 on May 21, 1999.

Authority: 7 U.S.C. 147a, 150bb, 150dd, 150ee, 150ff, 161, 162, and 164–167; 7 CFR 2.22, 2.80, and 371.2(c).

Done in Washington, DC, this 28th day of January 2000.

Bobby R. Acord,

Acting Administrator, Animal and Plant Health Inspector Service.

[FR Doc. 00–2380 Filed 2–2–00; 8:45 am]

BILLING CODE 3410–34–U

DEPARTMENT OF TRANSPORTATION

Federal Aviation Administration

14 CFR Part 39

[Docket No. 99–NM–76–AD; Amendment 39–11540; AD 2000–02–22]

RIN 2120–AA64

Airworthiness Directives; Boeing Model 747–400 Series Airplanes Equipped with Rolls-Royce RB211–524G/H and RB211–524G–T/H–T Engines

AGENCY: Federal Aviation Administration, DOT.

ACTION: Final rule; request for comments.

SUMMARY: This amendment adopts a new airworthiness directive (AD), applicable to certain Boeing Model 747–400 series airplanes. This action requires installation of a modification of the thrust reverser control and indication system and wiring on each engine; and repetitive operational checks of that installation to detect discrepancies, and repair, if necessary. This amendment is prompted by the results of a safety review, which revealed that in-flight deployment of a thrust reverser could result in a significant reduction in airplane controllability. The actions specified in this AD are intended to ensure the integrity of the fail-safe features of the thrust reverser system by preventing possible failure modes, which could result in inadvertent deployment of a thrust reverser during flight, and consequent reduced controllability of the airplane.

DATES: Effective February 18, 2000.

The incorporation by reference of certain publications listed in the regulations is approved by the Director of the Federal Register as of February 18, 2000.

Comments for inclusion in the Rules Docket must be received on or before April 3, 2000.

ADDRESSES: Submit comments in triplicate to the Federal Aviation Administration (FAA), Transport Airplane Directorate, ANM–114, Attention: Rules Docket No. 99–NM–76–AD, 1601 Lind Avenue, SW., Renton, Washington 98055–4056.

The service information referenced in this AD may be obtained from Boeing Commercial Airplane Group, P.O. Box 3707, Seattle, Washington 98124–2207. This information may be examined at the FAA, Transport Airplane Directorate, 1601 Lind Avenue, SW., Renton, Washington; or at the Office of the Federal Register, 800 North Capitol Street, NW., suite 700, Washington, DC.

FOR FURTHER INFORMATION CONTACT: Ed Hormel, Aerospace Engineer, Propulsion Branch, ANM–140S, FAA, Transport Airplane Directorate, Seattle Aircraft Certification Office, 1601 Lind Avenue, SW., Renton, Washington 98055–4056; telephone (206) 227–2681; fax (206) 227–1181.

SUPPLEMENTARY INFORMATION: On May 26, 1991, a Boeing Model 767–300ER series airplane was involved in an accident as a result of an uncommanded in-flight deployment of a thrust reverser. Following that accident, a study was conducted to evaluate the potential effects of an uncommanded thrust reverser deployment throughout the flight regime of the Boeing Model 747 series airplane. The study included a re-evaluation of the thrust reverser control system fault analysis and airplane controllability. The results of the evaluation indicated that, in the event of thrust reverser deployment during high-speed climb using high engine power, these airplanes also could experience control problems. This condition, if not corrected, could result in possible failure modes in the thrust reverser control system, inadvertent deployment of a thrust reverser during flight, and consequent reduced controllability of the airplane.

The FAA has prioritized the issuance of AD's for corrective actions for the thrust reverser system on Boeing airplane models following the 1991 accident. Based on service experience, analyses, and flight simulator studies, it was determined that an in-flight deployment of a thrust reverser has more effect on controllability of twin-engine airplane models than of Model 747 series airplanes, which have four engines. For this reason, the highest priority was given to rulemaking that required corrective actions for the twin-engine airplane models. AD's correcting the same type of unsafe condition addressed by this AD have been previously issued for specific airplanes within the Boeing Model 737, 757 and 767 series.

Service experience has shown that in-flight thrust reverser deployments have occurred on Model 747 airplanes during certain flight conditions with no significant airplane controllability problems being reported. However, the manufacturer has been unable to establish that acceptable airplane controllability would be achieved following these deployments throughout the operating envelope of the airplane. Additionally, safety analyses performed by the manufacturer and reviewed by the FAA have been unable to establish that the risks for uncommanded thrust reverser deployment during critical flight conditions are acceptably low.

Other Relevant Rulemaking

This AD is related to AD 94–15–05, amendment 39–8976 (59 FR 37655, July 25, 1994), which is applicable to all Boeing Model 747–400 series airplanes, and requires various inspections and tests of the thrust reverser control and indication system, and correction of any discrepancy found. Accomplishment of the actions required by this AD would terminate certain inspections and tests required by AD 94–15–05.

Explanation of Relevant Service Information

The FAA has reviewed and approved the following Boeing Service Bulletins:

- 747–45–2016, Revision 1, dated May 2, 1996, and 747–45–2007, dated March 29, 1990, which describe procedures for modifications to the central maintenance computer system hardware and software.
- 747–73–2052, Revision 1, dated April 23, 1992, which describes procedures for modification of the fuel temperature indicating system. This service bulletin references Rolls-Royce Service Bulletin RB.211–71–9043, dated May 4, 1990, which describes additional procedures for modification of the fuel temperature indicating system. Accomplishment of Boeing Service Bulletin 747–73–2052, Revision 1, requires prior or concurrent accomplishment of Boeing Service Bulletin 747–45–2007; and Rolls-Royce Service Bulletin RB.211–71–9043.
- 747–31–2246, dated May 2, 1996, which describes procedures for modifications of the integrated display system software.
- 747–78–2157, Revision 2, dated November 26, 1997, and 747–78–2121, dated October 29, 1992, which describe procedures for the installation of provisional wiring for an additional thrust reverser locking device. These service bulletins reference the Boeing Standard Wiring Practices Manual, which describes wire installation and separation procedures.
- 747–78–2158, Revision 2, dated July 29, 1999, which describes

procedures for installation of an additional locking system on the thrust reversers. This service bulletin references the following Rolls-Royce Service Bulletins:

—RB.211–71–9600, Revision 8, dated May 24, 1996; and RB.211–71–9608, Revision 3, dated April 18, 1997, which describe procedures for the installation of provisions on the engines to accommodate the installation of an additional thrust reverser locking gearbox; and

—RB.211–78–9601, Revision 5, dated February 20, 1998, which describes additional procedures for installation of an additional locking system on the thrust reversers; and

—RB.211–78–B207, dated November 19, 1994, which describes procedures for installation of a thrust reverser translating cowl assembly seal support.

—Accomplishment of Boeing Service Bulletin 747–78–2158 requires prior or concurrent accomplishment of the following service bulletins:

1. Boeing Service Bulletin 747–45–2052, Revision 1;
2. Boeing Service Bulletin 747–78–2121;
3. Boeing Service Bulletin 747–45–2016, Revision 1;
4. Boeing Service Bulletin 747–31–2246;
5. Boeing Service Bulletin 747–78–2157, Revision 2;
6. Rolls-Royce Service Bulletin RB.211–71–9600, Revision 8; and
7. Rolls-Royce Service Bulletin RB.211–71–9608, Revision 3.

In addition, this service bulletin requires concurrent accomplishment of Rolls-Royce Service Bulletins RB.211–78–9601, and RB.211–78–B207.

The modification procedures described by Boeing Service Bulletin 747–78–2158 were previously validated by the manufacturer, and the necessary changes have been incorporated into the latest revisions of the service bulletins. The FAA has determined that the procedures specified in Boeing Service Bulletin 747–78–2158, Revision 1, and Revision 2, as well as the other service bulletins referenced in this AD, have been effectively validated; therefore the FAA requires that this modification be accomplished. Several airplanes have been successfully modified in accordance with the service bulletins, and this past experience should minimize the likelihood for subsequent service bulletin revisions, requests for alternative methods of compliance, and superseding AD's.

Accomplishment of the actions described in all service bulletins listed previously would eliminate the need for certain repetitive inspections and tests.

Explanation of Requirements of the Rule

Since an unsafe condition has been identified that is likely to exist or develop on other airplanes of the same type design, this AD is being issued to prevent possible failure modes that can result in inadvertent deployment of a thrust reverser during flight and consequent reduced controllability of the airplane. This AD requires installation of a modification of the thrust reverser control and indication system and wiring on each engine; and repetitive operational checks of that installation to detect discrepancies, and repair, if necessary. The actions are required to be accomplished in accordance with the service bulletins described previously, except as discussed below.

Repetitive operational checks to detect discrepancies of the gearbox locks and the air motor brake are required to be accomplished in accordance with procedure included in Appendix 1 (including Figure 1) of this AD. Correction of any discrepancy detected is required to be accomplished in accordance with the procedures described in the Boeing 747 Airplane Maintenance Manual.

Differences Between Service Bulletin and This AD

Operators should note that, although Boeing Service Bulletin 747–78–2158, Revision 2, does not recommend a specific compliance time for accomplishment of the additional system lock installation, the FAA has determined that an unspecified compliance time would not address the identified unsafe condition in a timely manner. In developing an appropriate compliance time for this AD, the FAA considered not only the manufacturer's recommendation, but the degree of urgency associated with addressing the subject unsafe condition, the average utilization of the affected fleet, and the time necessary to perform the installation. In light of all of these factors, the FAA finds a 36-month compliance time for completing the required actions to be warranted, in that it represents an appropriate interval of time allowable for affected airplanes to continue to operate without compromising safety.

Operators also should note that, although the service bulletin does not specify operational checks of the actuation system lock installation following accomplishment of that installation, the FAA has determined that repetitive operational checks of the additional system lock on each thrust reverser will support continued operational safety of thrust reversers with actuation system locks.

Cost Impact

None of the Model 747 series airplanes affected by this action are on the U.S. Register. All airplanes included in the applicability of this rule currently are operated by non-U.S. operators under foreign registry; therefore, they are not directly affected by this AD action. However, the FAA considers that this rule is necessary to ensure that the unsafe condition is addressed in the event that any of these subject airplanes are imported and placed on the U.S. Register in the future.

Should an affected airplane be imported and placed on the U.S. Register in the future, it would require approximately 397 work hours to accomplish the required modifications, at an average labor rate of $60 per work hour. Required parts would be provided by the manufacturer at no cost to the operators. Based on these figures, the cost impact of the modifications required by this AD would be $23,820 per airplane.

It would require approximately 185 work hours to accomplish the required installation of the locking gearbox, at an average labor rate of $60 per work hour. Required parts would be provided by the manufacturer at no cost to the operators. Based on these figures, the cost impact of the installation of the locking gearbox required by this AD would be $11,000 per airplane.

It would require approximately 2 work hours to accomplish the required operational check, at an average labor rate of $60 per work hour. Based on these figures, the cost impact of the operational check required by this AD would be $120 per airplane, per check.

Determination of Rule's Effective Date

Since this AD action does not affect any airplane that is currently on the U.S. register, it has no adverse economic impact and imposes no additional burden on any person. Therefore, prior notice and public procedures hereon are unnecessary and the amendment may be made effective in less than 30 days after publication in the **Federal Register**.

Comments Invited

Although this action is in the form of a final rule and was not preceded by notice and opportunity for public comment, comments are invited on this rule. Interested persons are invited to comment on this rule by submitting such written data, views, or arguments as they may desire. Communications shall identify the Rules Docket number

and be submitted in triplicate to the address specified under the caption **ADDRESSES**. All communications received on or before the closing date for comments will be considered, and this rule may be amended in light of the comments received. Factual information that supports the commenter's ideas and suggestions is extremely helpful in evaluating the effectiveness of the AD action and determining whether additional rulemaking action would be needed.

Comments are specifically invited on the overall regulatory, economic, environmental, and energy aspects of the rule that might suggest a need to modify the rule. All comments submitted will be available, both before and after the closing date for comments, in the Rules Docket for examination by interested persons. A report that summarizes each FAA-public contact concerned with the substance of this AD will be filed in the Rules Docket.

Commenters wishing the FAA to acknowledge receipt of their comments submitted in response to this rule must submit a self-addressed, stamped postcard on which the following statement is made: ''Comments to Docket Number 99–NM–76–AD.'' The postcard will be date stamped and returned to the commenter.

Regulatory Impact

The regulations adopted herein will not have a substantial direct effect on the States, on the relationship between the national Government and the States, or on the distribution of power and responsibilities among the various levels of government. Therefore, it is determined that this final rule does not have federalism implications under Executive Order 13132.

For the reasons discussed above, I certify that this action (1) is not a ''significant regulatory action'' under Executive Order 12866; (2) is not a ''significant rule'' under DOT Regulatory Policies and Procedures (44 FR 11034, February 26, 1979); and (3) will not have a significant economic impact, positive or negative, on a substantial number of small entities under the criteria of the Regulatory Flexibility Act. A final evaluation has been prepared for this action and it is contained in the Rules Docket. A copy of it may be obtained from the Rules Docket at the location provided under the caption **ADDRESSES**.

List of Subjects in 14 CFR Part 39

Air transportation, Aircraft, Aviation safety, Incorporation by reference, Safety.

Adoption of the Amendment

Accordingly, pursuant to the authority delegated to me by the Administrator, the Federal Aviation Administration amends part 39 of the Federal Aviation Regulations (14 CFR part 39) as follows:

PART 39—AIRWORTHINESS DIRECTIVES

1. The authority citation for part 39 continues to read as follows:

Authority: 49 U.S.C. 106(g), 40113, 44701.

§ 39.13 [Amended]

2. Section 39.13 is amended by adding the following new airworthiness directive:

2000–02–22 Boeing: Amendment 39–11540. Docket 99–NM–76–AD.

Applicability: Model 747–400 series airplanes equipped with Rolls-Royce RB211–524G/H engines, and RB211–524G–T/H–T engines; certificated in any category.

Note 1: This AD applies to each airplane identified in the preceding applicability provision, regardless of whether it has been modified, altered, or repaired in the area subject to the requirements of this AD. For airplanes that have been modified, altered, or repaired so that the performance of the requirements of this AD is affected, the owner/operator must request approval for an alternative method of compliance in accordance with paragraph (d) of this AD. The request should include an assessment of the effect of the modification, alteration, or repair on the unsafe condition addressed by this AD; and, if the unsafe condition has not been eliminated, the request should include specific proposed actions to address it.

Compliance: Required as indicated, unless accomplished previously.

To prevent inadvertent deployment of a thrust reverser during flight and consequent reduced controllability of the airplane, accomplish the following:

Modifications

(a) Accomplish the requirements of paragraphs (a)(1), (a)(2), and (a)(3) of this AD at the times specified in those paragraphs. Accomplishment of these actions, or installation of an additional locking system during production in accordance with production equivalent PRR 81000–39, constitutes terminating action for the inspections and tests required by paragraph (c) of AD 94–15–05, amendment 39–8976.

(1) Within 36 months after the effective date of this AD: Install an additional locking system on each engine thrust reverser in accordance with the Accomplishment Instructions of Boeing Service Bulletin 747–78–2158, Revision 2, dated July 29, 1999.

Note 2: Modifications accomplished prior to the effective date of this AD in accordance with Boeing Service Bulletin 747–78–2158, Revision 1, dated January 22, 1998; are considered acceptable for compliance with the applicable action specified in this amendment.

(2) Concurrent with the installation required by paragraph (a)(1) of this AD, accomplish the requirements of paragraphs (a)(2)(i) and (a)(2)(ii) of this AD.

(i) Accomplish the additional procedures for installation of an additional locking system on each engine thrust reverser in accordance with Rolls-Royce Service Bulletin RB.211–78–9601, Revision 5, dated February 20, 1998.

(ii) Install a thrust reverser translating cowl assembly seal support in accordance with Rolls-Royce Service Bulletin RB.211–78-B207, dated November 19, 1994.

(3) Prior to or concurrent with the installation required by paragraph (a)(1) of this AD, accomplish the requirements of paragraphs (a)(3)(i), (a)(3)(ii), (a)(3)(iii), and (a)(3)(iv) of this AD:

(i) Modify the fuel temperature indicating system in accordance with Boeing Service Bulletin 747–73–2052, Revision 1, dated April 23, 1992; and Rolls-Royce Service Bulletin RB.211–71–9043, dated May 4, 1990. Prior to or concurrent with accomplishment of Boeing Service Bulletin 747–73–2052, Revision 1: Modify the central maintenance computer system (CMCS) hardware and software in accordance with Boeing Service Bulletin 747–45–2007, dated March 29, 1990; and Boeing Service Bulletin 747–45–2016, Revision 1, dated May 2, 1996.

(ii) Install the provisional wiring for the locking system on the thrust reversers in accordance with Boeing Service Bulletin 747–78–2121, dated October 29, 1992; and 747–78–2157, Revision 2, dated November 26, 1997.

(iii) Modify the integrated display system (IDS) software in accordance with Boeing Service Bulletin 747–31–2246, dated May 2, 1996.

(iv) Install engine provisions to accommodate the installation of an additional locking system on each engine thrust reverser in accordance with Rolls-Royce Service Bulletin RB.211–71–9600, Revision 8, dated May 24, 1996; and RB.211–71–9608, Revision 3, dated April 18, 1997.

Repetitive Operational Checks

(b) Within 3,000 flight hours after accomplishing the requirements of paragraph (a) of this AD, or within 1,000 flight hours after the effective date of this AD, whichever occurs later: Perform operational checks of the number 2 and number 3 gearbox locks and of the air motor brake, in accordance with the procedures described in Appendix 1 (including Figure 1) of this AD. Repeat the operational checks thereafter at intervals not to exceed 3,000 flight hours.

Corrective Actions

(c) If any operational check required by paragraph (b) of this AD cannot be successfully performed as specified in the procedures described in Appendix 1 (including Figure 1) of this AD, or if any discrepancy is detected during any operational check, prior to further flight, repair in accordance with the procedures specified in the Boeing 747 Airplane Maintenance Manual. Additionally, prior to further flight, any failed operational check required by paragraph (b) of this AD must be

repeated and successfully accomplished. Repeat the operational checks thereafter at intervals not to exceed 3,000 flight hours.

Alternative Methods of Compliance

(d) An alternative method of compliance or adjustment of the compliance time that provides an acceptable level of safety may be used if approved by the Manager, Seattle Aircraft Certification Office (ACO), FAA, Transport Airplane Directorate. Operators shall submit their requests through an appropriate FAA Principal Maintenance Inspector, who may add comments and then send it to the Manager, Seattle ACO.

Note 3: Information concerning the existence of approved alternative methods of compliance with this AD, if any, may be obtained from the Seattle ACO.

Special Flight Permits

(e) Special flight permits may be issued in accordance with §§ 21.197 and 21.199 of the Federal Aviation Regulations (14 CFR 21.197 and 21.199) to operate the airplane to a location where the requirements of this AD can be accomplished.

Incorporation by Reference

(f) Except as provided by paragraphs (b), (c)(1), and (c)(2) of this AD, the actions shall be done in accordance with the applicable service bulletins, which contain the specified list of effective pages:

Service bulletin referenced and date	Page No. shown on page	Revision level shown on page	Date shown on page
Boeing 747–78–2157, Revision 2, November 26, 1997	1–151	2	November 26, 1997.
Boeing 747–78–2158, Revision 2, July 29, 1999	1–344	2	July 29, 1999.
Boeing 747–73–2052, Revision 1, April 23, 1992	1, 3–5, 8, 10, 15–17	1	April 23, 1992.
	2, 6–7, 9, 11–14, 18–41	Original	June 7, 1990.
Boeing 747–31–2246, May 2, 1996	1–12	Original	May 2, 1996.
Boeing 747–45–2016, Revision 1, May 2, 1996	1–33	1	May 2, 1996.
Boeing 747–78–2121, October 29, 1992	1–20	Original	October 29, 1992.
Boeing 747–45–2007, March 29, 1990	1–13	Original	March 29, 1990.
Rolls-Royce RB.211–78–9601, Revision 5, February 20, 1998	1–4	5	February 20, 1998.
	5	2	October 20, 1995.
	6–21	Original	August 7, 1992.
	Supplement.		
	1–3	4	February 20, 1998.
Rolls-Royce RB.211–71–9600, Revision 8, May 24, 1996	1, 71–72, 72A	8	May 24, 1996.
	2, 5–16, 18–32, 34–67, 73–77, 87–88.	2	February 26, 1993.
	3	7	October 20, 1995.
	4	6	March 31, 1995.
	17, 33, 86	4	February 11, 1994.
	68–70, 78, 80–84	Original	August 7, 1992.
	79, 85, 90–95	3	December 17, 1993.
	89	5	August 19, 1994.
	Supplement.		
	1–5	3	March 31, 1995.
Rolls-Royce RB.211–78-B207, November 19, 1994	1–15	Original	November 19, 1994.
	Supplement.		
	1	Original	November 19, 1994.
Rolls-Royce RB.211–71–9608, Revision 3, April 18, 1997	1, 5	3	April 18, 1997.
	2–4, 6–18, 20–48	Original	August 7, 1992.
	19	2	July 5, 1996.
	Supplement.		
	1–3	2	April 18, 1997.
Rolls-Royce RB.211–71–9043, May 4, 1990	1–18	Original	May 4, 1990.
	Supplement.		
	1–2	Original	May 4, 1990.

This incorporation by reference was approved by the Director of the Federal Register in accordance with 5 U.S.C. 552(a) and 1 CFR part 51. Copies may be obtained from Boeing Commercial Airplane Group, P.O. Box 3707, Seattle, Washington 98124–2207. Copies may be inspected at the FAA, Transport Airplane Directorate, 1601 Lind Avenue, SW., Renton, Washington; or at the Office of the Federal Register, 800 North Capitol Street, NW., suite 700, Washington, DC.

(g) This amendment becomes effective on February 18, 2000.

Appendix 1

1. Gearbox Lock and Air Motor Brake Test

A. General

(1) To do the test of the gearbox locks and air motor brake, you must do the steps that follow:

(a) Do the deactivation procedure of the thrust reverser system.

(b) Do the test of the air motor brake.

(c) Do the test of the gearbox locks.

(d) Do the activation procedure of the thrust reverser system.

B. Equipment

(1) CP30784—INA Access Platform, Rolls-Royce

(2) CP30769—Protection Pads, Rolls-Royce

(3) CP30785—Access Stools, Rolls-Royce

(4) UT1293/1—Load Tool, Rolls-Royce (2 required)

C. Procedure (Fig. 1).

WARNING: DO THE DEACTIVATION PROCEDURE OF THE THRUST REVERSER SYSTEM, WHICH MUST INCLUDE THE INSTALLATION OF LOCK BARS (OR BLOCKERS), TO PREVENT THE ACCIDENTAL OPERATION OF THE THRUST REVERSER. THE ACCIDENTAL OPERATION OF THE THRUST REVERSER COULD CAUSE INJURY TO PERSONS AND DAMAGE TO EQUIPMENT.

(1) Do the deactivation procedure of the thrust reverser in the forward thrust position for ground maintenance.

(2) Use a 0.25 inch (6.4 mm) square drive to turn the manual lock release screw to release the No. 2 and No. 3 gearbox locks.

Note: It is not always easy to turn the manual lock release screws. This is because of a preload in the systems. To release the preload, lightly turn the manual cycle and lockout shafts in the stow direction.

(a) Make sure the lock indicators are extended at gearboxes No. 2 and No. 3.

(3) Do a test of the air motor brake:

(a) IF YOU USE THE LOAD TOOLS;

Try to move the translating cowl in the extend direction as follows:

(1) Remove the lock bars that you installed in the deactivation procedure.

(2) Install the load tools through the cutouts and into the No. 2 and No.3 gearboxes.

(3) Attach the torque wrenches to the load tools.

(4) Try to move the translating cowl in the extend direction.

(b) IF YOU DO NOT USE THE LOAD TOOLS;

Try to move the translating cowl in the extend direction as follows:

(1) Remove the lock bars that you installed in the deactivation procedure.

(2) Put the 0.25 inch (6.4 mm) square drive extensions into the manual cycle and lockout shaft at the No. 2 and No. 3 gearboxes.

(a) Attach the standard drive tools.

(3) Try to move the translating cowl in the extend direction.

(c) If the translating cowl moves, replace the air motor and shutoff valve.

(4) Do a test of the gear box locks:

Note: The steps that follow are for the No. 3 gearbox. Then, do these steps again for the No. 2 gearbox.

(a) Install the lock bars in the manual cycle and lockout shafts at the No. 2 and No. 3 gearboxes.

(b) Install the INA access platform in the exhaust mixer duct.

(c) Install the protection pads and the access stools.

(d) Release the air motor brake:

(1) Open the air motor access and pressure relief panel.

(2) Pull the air motor brake release handle forward and turn it counterclockwise to lock the handle in its position.

(e) Turn the manual lock release screw clockwise to engage the No. 3 gearbox lock.

(1) Make sure that the lock indicator is retracted (under the surface) at gearbox No. 3.

(f) Make sure No. 2 gearbox lock is released.

(1) Make sure the lock indicator is extended at gearbox No. 2.

(g) IF YOU USE THE LOAD TOOLS; Do a check of the lock dogs as follows:

(1) Remove the lock bars from the No. 2 and No. 3 gearboxes.

(2) Install the load tool through the cutout and into the No. 3 gearbox.

(3) Attach the torque wrench to the load tool.

CAUTION: DO NOT APPLY A TORQUE LOAD OF MORE THAN 30 POUND-INCHES (3.4 NEWTON-METERS) TO THE MANUAL CYCLE AND LOCK OUT SHAFT. A LARGER TORQUE LOAD CAN CAUSE DAMAGE TO THE MECHANISM.

(4) Apply a torque counterclockwise through the manual wind position of the No. 3 gearbox.

(a) If the translating cowl does not move, the lock bar touched one of the two lock dogs.

(b) If the translating cowl moved, lock the thrust reverser until the No. 3 gearbox is replaced.

(5) Turn the manual lock release screw counterclockwise to release the gearbox lock.

(a) Make sure that the indication rod comes out of the No. 3 gearbox.

(6) Turn the manual cycle and lockout shaft counterclockwise a ¼ of a turn.

(7) Turn the manual lock release screw clockwise to engage the No. 3 gearbox lock.

(a) Make sure that the indication rod is fully retracted (under the surface).

CAUTION: DO NOT APPLY A TORQUE LOAD OF MORE THAN 30 POUND-INCHES (3.4 NEWTON-METERS) TO THE MANUAL CYCLE AND LOCKOUT SHAFT. A GREATER TORQUE LOAD CAN CAUSE DAMAGE TO THE MECHANISM.

(8) Apply a torque counterclockwise through the manual wind position of the No. 3 gearbox.

(a) If the manual cycle and lockout shaft can not be turned more than approximately ¼ turn, the second lock dog is serviceable.

(b) If the manual cycle and lockout shaft can be turned more than approximately ¼ turn, the second lock dog is unserviceable. Lock the thrust reverser until the No. 3 gearbox is replaced.

Note: The two lock dogs are found ½ turn apart when you use the manual cycle and lockout shaft. If necessary, do the check again to make sure that the lock dogs are serviceable.

(9) Do the procedure given above for the No. 2 gearbox lock.

(h) IF YOU DO NOT USE THE LOAD TOOLS; Do a check of the lock dogs as follows:

(1) Remove the lock bars from the No. 2 and No. 3 gearboxes.

(2) Put the 0.25 inch (6.4 mm) square drive extensions into the manual cycle and lockout shaft at the No. 2 and No. 3 gearboxes.

(a) Attach the standard drive tools.

CAUTION: DO NOT APPLY A TORQUE LOAD OR MORE THAN 30 POUND-INCHES (3.4 NEWTOWN-METERS) TO THE MANUAL CYCLE AND LOCKOUT SHAFT. A LARGER TORQUE LOAD CAN CAUSE DAMAGE TO THE MECHANISM.

(3) Apply a torque counterclockwise through the manual wind position of the No. 3 gearbox.

(a) If the translating cowl does not move, the lock bar touched one of the two lock dogs.

(b) If the translating cowl moved, lock the thrust reverser until the No. 3 gearbox is replaced.

(4) Turn the manual lock release screw counterclockwise to release the gearbox lock.

(a) Make sure that the indication rod comes out of the No. 3 gearbox.

(5) Turn the manual cycle and lockout shaft counterclockwise a ¼ of a turn.

(6) Turn the manual lock release screw clockwise to engage the No. 3 gearbox lock.

(a) Make sure that the indication rod is fully retracted (under the surface).

CAUTION: DO NOT APPLY A TORQUE LOAD OF MORE THAN 30 POUND-INCHES (3.4 NEWTON-METERS) TO THE MANUAL CYCLE AND LOCKOUT SHAFT. A GREATER TORQUE LOAD CAN CAUSE DAMAGE TO THE MECHANISM.

(7) Apply a torque counterclockwise through the manual wind position of the No. 3 gearbox.

(a) If the manual cycle and lockout shaft can not be turned more than approximately ¼ turn, the second lock dog is serviceable.

(b) If the manual cycle and lockout shaft can be turned more than approximately ¼ turn, the second lock dog is unserviceable. Lock the thrust reverser until the No. 3 gearbox is replaced.

Note: The two lock dogs are found ½ turn apart when you use the manual cycle and lockout shaft. If necessary, do the check again to make sure that the lock dogs are serviceable.

(8) Do the procedure given above for the No. 2 gearbox lock.

(5) Install the lock bars in the manual cycle and lockout shafts at the No. 2 and No. 3 gearboxes.

(6) Apply the air motor manual brake:

(a) Turn the air motor brake release handle clockwise and then release.

(b) Close the air motor access and pressure relief panel.

(7) Make sure the No. 2 and No. 3 gearbox locks are released.

(a) Makes sure the lock indicator rods are extended at the No.2 and No. 3 gearboxes.

(8) IF YOU USE THE LOAD TOOLS;

Try to move the translating cowl in the extend direction as follows:

(a) Remove the lock bars from the No. 2 and No. 3 gearboxes.

(b) Install the load tools through the cutouts and into the No. 2 and No. 3 gearboxes.

(c) Attach the torque wrenches to the load tools.

(d) Try to move the translating cowl in the extend direction.

(9) IF YOU DO NOT USE THE LOAD TOOLS;

Try to move the translating cowl in the extend direction as follows:

(a) Remove the lock bars from the No. 2 and No. 3 gearboxes.

(b) Put the 0.25 inch (6.4 mm) square drive extension into the manual cycle and lockout shaft at the No. 2 and No. 3 gearboxes.

(1) Attach the standard drive tools.

(c) Try to move the translating cowl in the extend direction.

(10) If the translating cowl moves, do the full test again.

(a) If the translating sleeve moves again, lock the thrust reverser until you can replace the two locking gearboxes and the air motor and shutoff valve.

(11) Remove the access stools and protection pads.

(12) Remove the INA access platform from the exhaust mixer duct.

(13) Do the activation procedure of the thrust reverser system.

(14) Do the functional test of the thrust reverser system.

BILLING CODE 4910–13–P

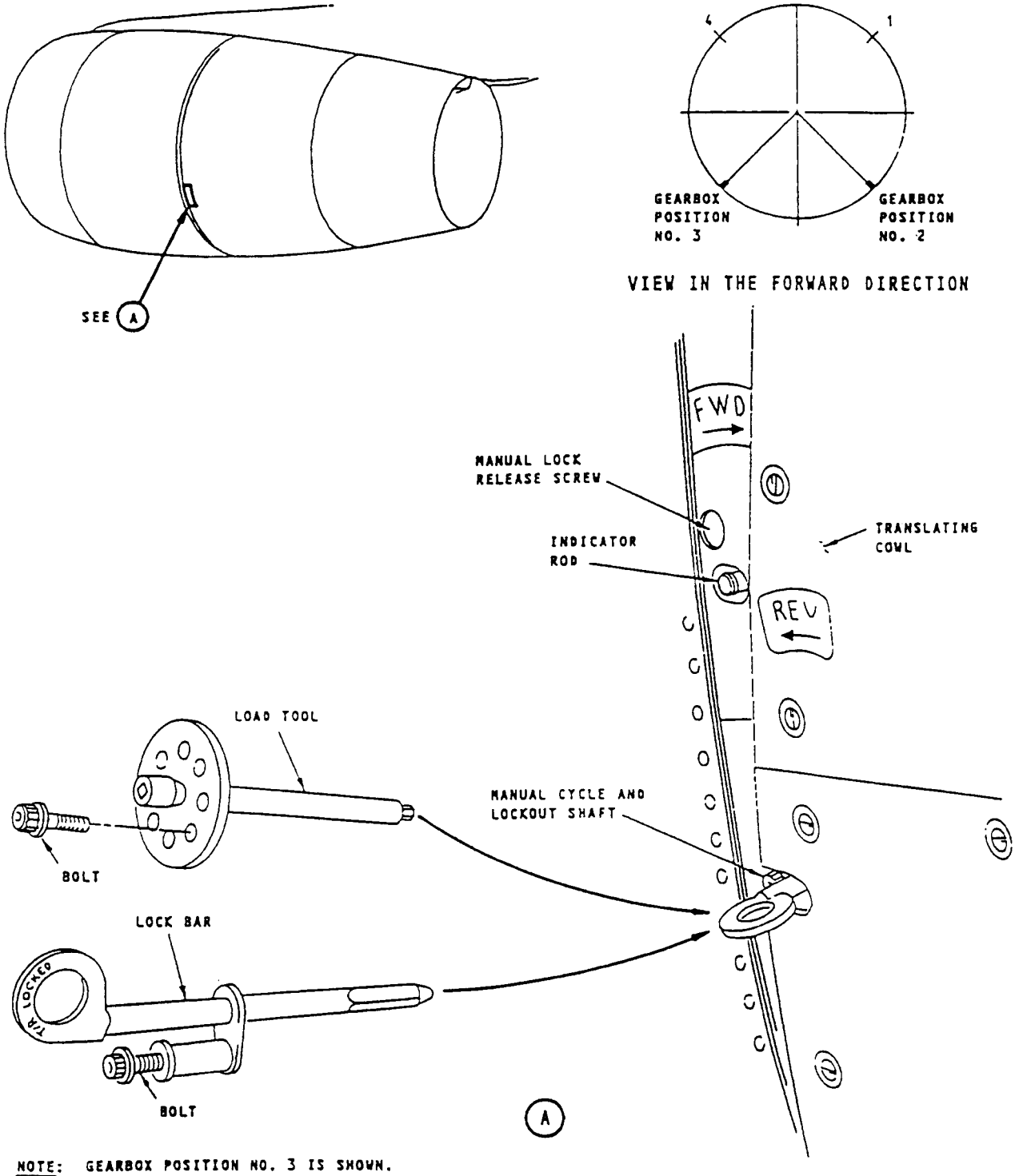

NOTE: GEARBOX POSITION NO. 3 IS SHOWN.
GEARBOX POSITION NO. 2 IS THE SAME.

Lock Bar/Load Tool Installation and Gearbox Manual Lock Release
Figure 1

Issued in Renton, Washington, on January 25, 2000.

Donald L. Riggin,

Acting Manager, Transport Airplane Directorate, Aircraft Certification Service.

[FR Doc. 00–2089 Filed 2–2–00; 8:45 am]

BILLING CODE 4910–13–C

DEPARTMENT OF TRANSPORTATION

Federal Aviation Administration

14 CFR Part 39

[Docket No. 99–NM–309–AD; Amendment 39–11539; AD 2000–02–21]

RIN 2120–AA64

Airworthiness Directives; British Aerospace (Jetstream) Model 4101 Airplanes

AGENCY: Federal Aviation Administration, DOT.

ACTION: Final rule.

SUMMARY: This amendment adopts a new airworthiness directive (AD), applicable to all British Aerospace (Jetstream) Model 4101 airplanes, that requires manufacture and installation of a placard on the left-hand instrument panel in the cockpit to prohibit push-backs of the airplane while the engines are running. In lieu of accomplishing the placard installation, this amendment requires repetitive installation of a new tow bracket sub-assembly that has the serial number and date of installation vibro etched on it. This amendment is prompted by issuance of mandatory continuing airworthiness information by a foreign civil airworthiness authority. The actions specified by this AD are intended to prevent fatigue failure of the towing bracket. Failure of the towing bracket could cause a towing vehicle to collide into the propeller while the airplane engines are running, and consequently, cause damage to the airplane, and injure ground personnel, flight crew, or passengers.

DATES: Effective March 9, 2000.

The incorporation by reference of certain publications listed in the regulations is approved by the Director of the Federal Register as of March 9, 2000.

ADDRESSES: The service information referenced in this AD may be obtained from British Aerospace Regional Aircraft American Support, 13850 Mclearen Road, Herndon, Virginia 20171. This information may be examined at the Federal Aviation Administration (FAA), Transport Airplane Directorate, Rules Docket, 1601 Lind Avenue, SW., Renton, Washington; or at the Office of the Federal Register, 800 North Capitol Street, NW., suite 700, Washington, DC.

FOR FURTHER INFORMATION CONTACT: Norman B. Martenson, Manager, International Branch, ANM–116, FAA, Transport Airplane Directorate, 1601 Lind Avenue, SW., Renton, Washington 98055–4056; telephone (425) 227–2110; fax (425) 227–1149.

SUPPLEMENTARY INFORMATION: A proposal to amend part 39 of the Federal Aviation Regulations (14 CFR part 39) to include an airworthiness directive (AD) that is applicable to all British Aerospace (Jetstream) Model 4101 airplanes was published in the **Federal Register** on November 24, 1999 (64 FR 66121). That action proposed to require manufacture and installation of a placard on the left-hand instrument panel in the cockpit to prohibit push-backs of the airplane while the engines are running. In lieu of accomplishing the placard installation, the action proposed to require repetitive installation of a new tow bracket sub-assembly that has the serial number and date of installation vibro etched on it.

Comments

Interested persons have been afforded an opportunity to participate in the making of this amendment. No comments were submitted in response to the proposal or the FAA's determination of the cost to the public.

Change Made to the Final Rule

Paragraph (b) of the final rule has been changed to correct the citation of Jetstream Service Bulletin J41–32–070, Revision 1, dated September 14, 1999. ''Revision 1'' was inadvertently omitted in the citation.

Conclusion

After careful review of the available data, the FAA has determined that air safety and the public interest require the adoption of the rule with the change described previously. The FAA has determined that this change will neither increase the economic burden on any operator nor increase the scope of the AD.

Cost Impact

The FAA estimates that 59 airplanes of U.S. registry will be affected by this AD.

It will take approximately 1 work hour per airplane to accomplish the required placard installation, at an average labor rate of $60 per work hour. Based on these figures, the cost impact of the placard installation required by this AD on U.S. operators is estimated to be $3,540, or $60 per airplane.

The cost impact figure discussed above is based on assumptions that no operator has yet accomplished any of the requirements of this AD action, and that no operator would accomplish those actions in the future if this AD were not adopted.

Should an operator elect to accomplish the optional action that is provided by this AD action, it will take approximately 2 work hours per airplane to accomplish it, at an average labor rate of $60 per work hour. The cost of required parts will be approximately $733 per airplane. Based on these figures, the cost impact of the optional action will be $853 per airplane, per replacement cycle.

Regulatory Impact

The regulations adopted herein will not have a substantial direct effect on the States, on the relationship between the national Government and the States, or on the distribution of power and responsibilities among the various levels of government. Therefore, it is determined that this final rule does not have federalism implications under Executive Order 13132.

For the reasons discussed above, I certify that this action: (1) Is not a ''significant regulatory action'' under Executive Order 12866; (2) is not a ''significant rule'' under DOT Regulatory Policies and Procedures (44 FR 11034, February 26, 1979); and (3) will not have a significant economic impact, positive or negative, on a substantial number of small entities under the criteria of the Regulatory Flexibility Act. A final evaluation has been prepared for this action and it is contained in the Rules Docket. A copy of it may be obtained from the Rules Docket at the location provided under the caption **ADDRESSES.**

List of Subjects in 14 CFR Part 39

Air transportation, Aircraft, Aviation safety, Incorporation by reference, Safety.

Adoption of the Amendment

Accordingly, pursuant to the authority delegated to me by the Administrator, the Federal Aviation Administration amends part 39 of the Federal Aviation Regulations (14 CFR part 39) as follows:

PART 39—AIRWORTHINESS DIRECTIVES

1. The authority citation for part 39 continues to read as follows:

Authority: 49 U.S.C. 106(g), 40113, 44701.

§ 39.13 [Amended]

2. Section 39.13 is amended by adding the following new airworthiness directive:

2000–02–21 **British Aerospace Regional Aircraft** [Formerly Jetstream Aircraft Limited; British Aerospace (Commercial Aircraft) Limited]: Amendment 39–11539. Docket 99–NM–309–AD.

Applicability: All Model Jetstream 4101 airplanes, certificated in any category.

Note 1: This AD applies to each airplane identified in the preceding applicability provision, regardless of whether it has been modified, altered, or repaired in the area subject to the requirements of this AD. For airplanes that have been modified, altered, or repaired so that the performance of the requirements of this AD is affected, the owner/operator must request approval for an alternative method of compliance in accordance with paragraph (c) of this AD. The request should include an assessment of the effect of the modification, alteration, or repair on the unsafe condition addressed by this AD; and, if the unsafe condition has not been eliminated, the request should include specific proposed actions to address it.

Compliance: Required as indicated, unless accomplished previously.

To prevent fatigue failure of the towing bracket, which could cause a towing vehicle to collide into the propeller while the airplane engines are running, and consequently, could cause damage to the airplane, and injure ground personnel, flight crew, or passengers, accomplish the following:

Placard Installation

(a) Prior to the accumulation of 12,000 total landings on the shock strut of the nose landing gear (NLG), or within 5 days after the effective date of this AD, whichever occurs later: Except as provided by paragraph (b) of this AD, manufacture and install a placard on the left-hand instrument panel in the cockpit to prohibit push-backs with engines running, in accordance with Jetstream Alert Service Bulletin J41–11–024, dated May 11, 1999.

Repetitive Action

(b) In lieu of accomplishing the actions specified in paragraph (a) of this AD, at the time specified in paragraph (a) of this AD, vibro etch the serial number and date of installation on a new tow bracket sub-assembly; and install the new tow bracket sub-assembly, in accordance with Jetstream Service Bulletin J41–32–070, Revision 1, dated September 14, 1999. Repeat the vibro etch process and installation of a new sub-assembly thereafter at intervals not to exceed 12,000 landings on the shock strut of the NLG.

Alternative Methods of Compliance

(c) An alternative method of compliance or adjustment of the compliance time that provides an acceptable level of safety may be used if approved by the Manager, International Branch, ANM–116, FAA, Transport Airplane Directorate. Operators shall submit their requests through an appropriate FAA Principal Maintenance Inspector, who may add comments and then send it to the Manager, International Branch, ANM–116.

Note 2: Information concerning the existence of approved alternative methods of compliance with this AD, if any, may be obtained from the International Branch, ANM–116.

Special Flight Permits

(d) Special flight permits may be issued in accordance with §§ 21.197 and 21.199 of the Federal Aviation Regulations (14 CFR 21.197 and 21.199) to operate the airplane to a location where the requirements of this AD can be accomplished.

Incorporation by Reference

(e) The actions shall be done in accordance with Jetstream Alert Service Bulletin J41–11–024, dated May 11, 1999; or Jetstream Service Bulletin J41–32–070, Revision 1, dated September 14, 1999; as applicable. This incorporation by reference was approved by the Director of the Federal Register in accordance with 5 U.S.C. 552(a) and 1 CFR part 51. Copies may be obtained from British Aerospace Regional Aircraft American Support, 13850 Mclearen Road, Herndon, Virginia 20171. Copies may be inspected at the FAA, Transport Airplane Directorate, 1601 Lind Avenue, SW., Renton, Washington; or at the Office of the Federal Register, 800 North Capitol Street, NW., suite 700, Washington, DC.

Note 3: The subject of this AD is addressed in British airworthiness directive 004–05–99.

(f) This amendment becomes effective on March 9, 2000.

Issued in Renton, Washington, on January 24, 2000.

Donald L. Riggin,

Acting Manager, Transport Airplane Directorate, Aircraft Certification Service.

[FR Doc. 00–2088 Filed 2–2–00; 8:45 am]

BILLING CODE 4910–13–P

DEPARTMENT OF TRANSPORTATION

Federal Aviation Administration

14 CFR Part 39

[Docket No. 98–NM–231–AD; Amendment 39–11538; AD 2000–02–20]

RIN 2120–AA64

Airworthiness Directives; Boeing Model 767 Series Airplanes Equipped With General Electric Model CF6–80C2 Series Engines

AGENCY: Federal Aviation Administration, DOT.

ACTION: Final rule.

SUMMARY: This amendment supersedes an existing airworthiness directive (AD), applicable to certain Boeing Model 767 series airplanes, that currently requires tests, inspections, and adjustments of the thrust reverser system. That AD also requires installation of a terminating modification, and repetitive follow-on actions. This amendment reduces the repetitive intervals for the follow-on actions. This amendment is prompted by reports indicating that several center drive units (CDU's) of the thrust reverser system were returned to the manufacturer of the CDU's because of low holding torque of the CDU cone brake. The actions specified by this AD are intended to ensure the integrity of the fail safe features of the thrust reverser system by preventing possible failure modes in the thrust reverser control system that can result in inadvertent deployment of a thrust reverser during flight.

DATES: Effective March 9, 2000.

The incorporation by reference of Boeing Service Bulletin 767–78A0081, Revision 1, dated October 9, 1997, is approved by the Director of the Federal Register as of March 9, 2000.

The incorporation by reference of certain other publications, as listed in the regulations, was approved previously by the Director of the Federal Register as of August 18, 1995 (60 FR 36976, July 19, 1995).

ADDRESSES: The service information referenced in this AD may be obtained from Boeing Commercial Airplane Group, P.O. Box 3707, Seattle, Washington 98124–2207. This information may be examined at the Federal Aviation Administration (FAA), Transport Airplane Directorate, Rules Docket, 1601 Lind Avenue, SW., Renton, Washington; or at the Office of the Federal Register, 800 North Capitol Street, NW., suite 700, Washington, DC.

FOR FURTHER INFORMATION CONTACT: Holly Thorson, Aerospace Engineer, Propulsion Branch, ANM–140S, FAA, Transport Airplane Directorate, Seattle Aircraft Certification Office, 1601 Lind Avenue, SW., Renton, Washington 98055–4056; telephone (425) 227–1357; fax (425) 227–1181.

SUPPLEMENTARY INFORMATION: A proposal to amend part 39 of the Federal Aviation Regulations (14 CFR part 39) by superseding AD 95–13–12, amendment 39–9292 (60 FR 36976, July 19, 1995), as revised by AD 95–13–12 R1, amendment 39–9528 (61 FR 9092, March 7, 1996); which is applicable to certain Boeing Model 767 series airplanes; was published in the **Federal Register** on June 14, 1999 (64 FR 31764). That action proposed to supersede AD 95–13–12 R1 to continue to require tests, inspections, and adjustments of the thrust reverser system. That action also proposed to continue to require installation of a terminating

modification, and repetitive follow-on actions. In addition, that action proposed to reduce the repetitive intervals for the follow-on actions.

Comments

Interested persons have been afforded an opportunity to participate in the making of this amendment. Due consideration has been given to the comments received.

Request for Credit for Modifications Installed in Production

One commenter, the airplane manufacturer, requests that paragraphs (c), (e), and (f) of the proposed AD [paragraphs (c), (f), and (h) of the final rule] be revised to provide credit for airplanes on which the third locking system was installed in production. The commenter states that Model 767 series airplanes having line numbers 475 and subsequent and equipped with General Electric Model CF6–80C2 series engines had a third locking system installed in production in accordance with Production Revision Record (PRR) B11481–70, and were not modified in accordance with Boeing Service Bulletin 767–78–0063, Revision 2, dated April 28, 1994, as specified in paragraph (c) of the proposed AD.

The FAA concurs that credit should be provided for airplanes that had a third locking system installed in production. This third locking system is equivalent to that described in Boeing Service Bulletin 767–78–0063, Revision 2. Therefore, paragraph (c) of the final rule has been revised to apply only to airplanes having line numbers 1 through 474 inclusive, and NOTE 2 has been added to identify airplanes modified in production. In addition, paragraphs (f) and (h) of the final rule have been revised to clarify the compliance time for airplanes modified in production.

Request for Credit for Functional Tests Accomplished During Production

One commenter, the airplane manufacturer, requests that paragraph (d) of the proposed AD [paragraphs (d) and (e) of the final rule] be revised to provide credit for airplanes on which the functional test of the cone brake of the center drive unit (CDU) was accomplished during production. The commenter states that a functional test is accomplished prior to delivery in accordance with procedures equivalent to those described in Boeing Service Bulletin 767–78A0081, Revision 1, dated October 9, 1997. The commenter states that an initial functional test equivalent to that specified in paragraph (d) of the proposed AD is effectively accomplished on newly delivered airplanes at zero hours time-in-service, and, therefore, the next functional test should be required at 1,000 hours time-in-service.

The FAA concurs that credit should be provided for airplanes on which a functional test of the CDU cone brake was accomplished during production. The FAA agrees that the production functional test is equivalent to the functional test described in Boeing Service Bulletin 767–78A0081, Revision 1. Therefore, paragraphs (d) and (e) of the final rule have been revised accordingly.

Request to Extend Interval for Repetitive Tests and Checks

Three commenters request that the interval for the repetitive functional tests and operational checks specified in paragraphs (d) and (e) of the proposed AD be extended. Two of the commenters request that the interval be revised to ''on the maintenance (letter) check nearest to the 1000-hour frequency.'' The third commenter requests that the interval be revised to 90 days or 1,500 hours time-in-service, whichever occurs first. The commenters state that their scheduled maintenance intervals do not coincide with the 1,000-hour interval specified in the proposed AD. Two of the commenters state that they are currently performing these tests and checks every 4,000 hours and have not had any adverse findings.

The FAA does not concur with the commenters' request to extend the interval for the repetitive functional tests and operational checks. The thrust reverser safety assessment developed by the airplane manufacturer for the Model 767 series airplane suggests a 650-hour interval for the functional test of the CDU cone brake. However, based on concerns about introducing errors through more frequent maintenance of the thrust reverser system, the FAA has determined that the 1,000-flight-hour interval for the functional tests of both the CDU cone brake and the electro-mechanical brake, as proposed, represents the maximum interval of time allowable to ensure the integrity of the fail safe features of the thrust reverser system for those airplanes that have incorporated a third locking system. In addition, this interval is consistent with recent rulemaking for similar installations on other Boeing airplane models. No change to the final rule is necessary in this regard.

Explanation of Other Changes to the Final Rule

The FAA's intent in paragraph (d) of the proposed rule was to require a functional test of the CDU cone brake within 1,000 hours time-in-service after the most recent test, or within 650 hours time-in-service after the effective date of this AD, whichever occurs later. The compliance time stated in the proposed rule was within 1,000 hours time-in-service after the most recent test of the cone brake performed in accordance with paragraph (a) of this AD, or within 650 hours time-in-service after the effective date of this AD, whichever occurs first. This statement was in error, in that the tests required by paragraph (a) of this AD do not include a test of the CDU cone brake. In addition, the statement ''whichever occurs first'' would have unnecessarily grounded airplanes. Therefore, the compliance time stated in paragraph (d) of the proposed rule has been corrected in the final rule, and new paragraphs (d)(1) and (d)(2) have been added to the final rule. In addition, the repetitive intervals for the test of the CDU cone brake that were specified in paragraphs (d)(1) and (d)(2) of the proposed rule are included as a new paragraph (e) of the final rule, and subsequent paragraphs have been renumbered accordingly.

In addition, in the ''Explanation of Requirements of Proposed Rule'' section of the preamble of the NPRM, the FAA stated that this AD would continue to require ''various inspections and functional tests to detect discrepancies of the thrust reverser control and indication system, and correction of any discrepancy found.'' However, the FAA finds that the instructions for correcting discrepancies found during a functional test of the cone brake [as described in paragraph (d) of the proposed rule and paragraphs (d) and (e) of this final rule] or an operational check of the electro-mechanical brake [as described in paragraph (e) of the proposed rule and paragraph (f) of this final rule] were inadvertently omitted from the body of the proposed rule. Therefore, a new paragraph (g) has been added to the final rule to specify that, if a test or check specified in paragraph (d), (e), or (f) of this AD cannot be performed successfully, repairs must be accomplished and the test successfully performed prior to further flight. Subsequent paragraphs have been renumbered accordingly.

Also, operators should note that paragraph (d) of the proposed rule specified the compliance time for the actions required by that paragraph in terms of hours time-in-service. However, other paragraphs in the proposed rule specified compliance times in flight hours. Therefore, for consistency of terminology, the FAA has revised paragraphs (d) and (e) of this final rule to specify the compliance time

in flight hours for the actions required by those paragraphs.

Conclusion

After careful review of the available data, including the comments noted above, the FAA has determined that air safety and the public interest require the adoption of the rule with the changes previously described. The FAA has determined that these changes will neither increase the economic burden on any operator nor increase the scope of the AD.

Interim Action

This is considered to be interim action. The manufacturer has advised that it currently is developing a modification that will positively address the unsafe condition addressed by this AD. Once this modification is developed, approved, and available, the FAA may consider additional rulemaking.

Cost Impact

There are approximately 143 Boeing Model 767 series airplanes equipped with General Electric Model CF6–80C2 series engines in the worldwide fleet. The FAA estimates that 45 airplanes of U.S. registry will be affected by this AD.

The tests, inspections, and adjustments that are currently required by AD 95–13–12 R1, and retained in this AD, take approximately 30 work hours per airplane to accomplish, at an average labor rate of $60 per work hour. Based on these figures, the cost impact on U.S. operators of the currently required tests, inspections, and adjustments that are retained in this AD is estimated to be $81,000, or $1,800 per airplane, per inspection cycle.

The terminating modification currently required by AD 95–13–12 R1, and retained in this AD, takes approximately 786 work hours per airplane to accomplish, at an average labor rate of $60 per work hour. Required parts will be provided by the manufacturer at no cost to the operator. Based on these figures, the cost impact on U.S. operators of the terminating modification required by this AD is estimated to be $2,122,200, or $47,160 per airplane.

The repetitive operational checks required by AD 95–13–12 R1, and retained in this AD, take approximately 2 work hours per airplane to accomplish, at an average labor rate of $60 per work hour. Based on these figures, the cost impact on U.S. operators of the repetitive operational checks required by this AD is estimated to be $5,400, or $120 per airplane, per operational check cycle.

The cost impact figures discussed above are based on assumptions that no operator has yet accomplished any of the requirements of this AD action, and that no operator would accomplish those actions in the future if this AD were not adopted. However, the FAA has been advised that all U.S.-registered airplanes have accomplished the terminating modification in accordance with the requirements of this AD. Therefore, the future economic cost impact of this rule on U.S. operators will not include those costs.

Regulatory Impact

The regulations adopted herein will not have substantial direct effects on the States, on the relationship between the national government and the States, or on the distribution of power and responsibilities among the various levels of government. Therefore, in accordance with Executive Order 12612, it is determined that this final rule does not have sufficient federalism implications to warrant the preparation of a Federalism Assessment.

For the reasons discussed above, I certify that this action: (1) Is not a ''significant regulatory action'' under Executive Order 12866; (2) is not a ''significant rule'' under DOT Regulatory Policies and Procedures (44 FR 11034, February 26, 1979); and (3) will not have a significant economic impact, positive or negative, on a substantial number of small entities under the criteria of the Regulatory Flexibility Act. A final evaluation has been prepared for this action and it is contained in the Rules Docket. A copy of it may be obtained from the Rules Docket at the location provided under the caption **ADDRESSES.**

List of Subjects in 14 CFR Part 39

Air transportation, Aircraft, Aviation safety, Incorporation by reference, Safety.

Adoption of the Amendment

Accordingly, pursuant to the authority delegated to me by the Administrator, the Federal Aviation Administration amends part 39 of the Federal Aviation Regulations (14 CFR part 39) as follows:

PART 39—AIRWORTHINESS DIRECTIVES

1. The authority citation for part 39 continues to read as follows:

Authority: 49 U.S.C. 106(g), 40113, 44701.

§ 39.13 [Amended]

2. Section 39.13 is amended by removing amendment 39–9528 (61 FR 9092, March 7, 1996), and by adding a new airworthiness directive (AD), amendment 39–11538, to read as follows:

2000–02–20 Boeing: Amendment 39–11538. Docket 98–NM–231–AD. Supersedes AD 95–13–12 R1, Amendment 39–9528.

Applicability: Model 767 series airplanes equipped with General Electric Model CF6–80C2 series engines, certificated in any category.

Note 1: This AD applies to each airplane identified in the preceding applicability provision, regardless of whether it has been modified, altered, or repaired in the area subject to the requirements of this AD. For airplanes that have been modified, altered, or repaired so that the performance of the requirements of this AD is affected, the owner/operator must request approval for an alternative method of compliance in accordance with paragraph (i)(1) of this AD. The request should include an assessment of the effect of the modification, alteration, or repair on the unsafe condition addressed by this AD; and, if the unsafe condition has not been eliminated, the request should include specific proposed actions to address it.

Compliance: Required as indicated, unless accomplished previously.

To ensure the integrity of the fail safe features of the thrust reverser system by preventing possible failure modes in the thrust reverser control system that can result in inadvertent deployment of a thrust reverser during flight, accomplish the following:

Restatement of Requirements of AD 95–13–12 R1

Repetitive Tests, Inspections, and Adjustments

(a) Within 30 days after August 18, 1995 (the effective date of AD 95–13–12 R1, amendment 39–9528), perform tests, inspections, and adjustments of the thrust reverser system in accordance with Boeing Service Bulletin 767–78–0047, Revision 3, dated July 28, 1994.

(1) Except as provided by paragraph (a)(2) of this AD, repeat all tests and inspections thereafter at intervals not to exceed 3,000 flight hours until the modification required by paragraph (c) of this AD is accomplished.

(2) Repeat the check of the grounding wire for the Directional Pilot Valve (DPV) of the thrust reverser in accordance with the service bulletin at intervals not to exceed 1,500 flight hours, and whenever maintenance action is taken that would disturb the DPV grounding circuit, until the modification required by paragraph (c) of this AD is accomplished.

Repair

(b) If any of the tests and/or inspections required by paragraph (a) of this AD cannot be successfully performed, or if those tests and/or inspections result in findings that are unacceptable in accordance with Boeing Service Bulletin 767–78–0047, Revision 3, dated July 28, 1994; accomplish paragraphs (b)(1) and (b)(2) of this AD.

(1) Prior to further flight, deactivate the associated thrust reverser in accordance with

Section 78–31–1 of Boeing Document D630T002, ''Boeing 767 Dispatch Deviation Guide,'' Revision 9, dated May 1, 1991; or Revision 10, dated September 1, 1992. After August 18, 1995, this action shall be accomplished only in accordance with Revision 10 of the Boeing document. No more than one reverser on any airplane may be deactivated under the provisions of this paragraph.

(2) Within 10 days after deactivation of any thrust reverser in accordance with this paragraph, the thrust reverser must be repaired in accordance with Boeing Service Bulletin 767–78–0047, Revision 3, dated July 28, 1994. Additionally, the tests and/or inspections required by paragraph (a) of this AD must be successfully accomplished; once this is accomplished, the thrust reverser must then be reactivated.

Modification

(c) For airplanes having line numbers 1 through 474 inclusive: Within 3 years after August 18, 1995, install a third locking system on the left- and right-hand engine thrust reversers in accordance with Boeing Service Bulletin 767–78–0063, Revision 2, dated April 28, 1994.

New Requirements of this AD

Note 2: Model 767 series airplanes equipped with General Electric Model CF6–80C2 series engines and having line numbers 475 and subsequent, on which Production Revision Record (PRR) B11481–70 (which installs a third locking system on the left- and right-hand engine thrust reversers) has been incorporated, need NOT be modified in accordance with Boeing Service Bulletin 767–78–0063, Revision 2.

Note 3: Boeing Service Bulletin 767–78–0063, references General Electric (GE) Service Bulletin 78–135 as an additional source of service information for accomplishment of the third locking system on the thrust reversers. However, the Boeing Service Bulletin does not specify the appropriate revision level, and the GE service bulletin has a new Lockheed Martin title for the same service bulletin: Lockheed Martin Service Bulletin 78–135, Revision 4, dated September 30, 1996. The appropriate revision level for the GE Service Bulletin is Revision 3, dated August 2, 1994. The GE and Lockheed Martin service bulletins are identical, and either may be used for accomplishment of the action described previously.

Note 4: The actions specified in Lockheed Martin Service Bulletin 78–1007, Revision 1, dated March 18, 1997; and Lockheed Martin Service Bulletin 78–1020, Revision 2, dated March 20, 1997; may be accomplished simultaneously in conjunction with Boeing Service Bulletin 767–78–0063 for accomplishment of the installation of the thrust reverser bracket and the thrust reverser lock. (Accomplishment of these two service bulletins together achieves the same results as Lockheed Martin Service Bulletin 78–135, Revision 4, and is acceptable for compliance with Boeing Service Bulletin 767–78–0063.)

Repetitive Tests and Checks

(d) Perform a functional test to detect discrepancies of the cone brake of the center drive unit (CDU) on each thrust reverser, in accordance with Boeing Service Bulletin 767–78A0081, Revision 1, dated October 9, 1997, or Appendix 1 (including Figure 1), sections 1.A.(2), 2.A., 2.C., and 2.D of this AD. Accomplish the functional test at the time specified in paragraph (d)(1) or (d)(2) of this AD, as applicable.

(1) For airplanes on which the test required by paragraph (d) of AD 95–13–12 R1 has been accomplished prior to the effective date of this AD: Accomplish the functional test within 1,000 flight hours after the most recent test of the CDU cone brake performed in accordance with paragraph (d) of AD 95–13–12 R1, or within 650 flight hours after the effective date of this AD, whichever occurs later.

(2) For airplanes on which the test required by paragraph (d) of AD 95–13–12 R1 has NOT been accomplished prior to the effective date of this AD: Accomplish the functional test within 1,000 flight hours since the date of manufacture, or within 650 flight hours after the effective date of this AD, whichever occurs later.

(e) Repeat the functional test of the CDU cone brake specified in paragraph (d) of this AD at the time specified in paragraph (e)(1) or (e)(2) of this AD, as applicable.

(1) For Model 767 series airplanes, line numbers up to and including 474, equipped with thrust reversers that have not been modified in accordance with Boeing Service Bulletin 767–78–0063: Repeat the functional test of the CDU cone brake thereafter at intervals not to exceed 650 flight hours.

(2) For Model 767 series airplanes, line numbers 475 and subsequent; and Model 767 series airplanes equipped with thrust reversers that have been modified in accordance with Boeing Service Bulletin 767–78–0063: Repeat the functional test of the CDU cone brake thereafter at intervals not to exceed 1,000 flight hours.

(f) Within 1,000 flight hours after accomplishing the modification required by paragraph (c) of this AD or after the equivalent modification (Production Revision Record B11481–70) is incorporated in production, or within 1,000 flight hours after the effective date of this AD, whichever occurs later: Perform operational checks of the electro-mechanical brake in accordance with Appendix 1 (including Figure 1), sections 1.A.(1), 2.A., 2.B., and 2.D of this AD. Repeat the operational checks thereafter at intervals not to exceed 1,000 flight hours.

Repair

(g) If any functional test or operational check required by paragraph (d), (e), or (f) of this AD cannot be successfully performed, prior to further flight, repair in accordance with Boeing Service Bulletin 767–78A0081, Revision 1, dated October 9, 1997; or Appendix 1, section 2.B. and 2.C., of this AD; as applicable; and repeat the applicable test or check until successfully accomplished.

Terminating Action

(h) Accomplishment of the modification required by paragraph (c) or installation of an equivalent modification (Production Revision Record B11481–70) in production, and accomplishment of periodic operational checks required by paragraphs (d), (e), and (f) of this AD, constitutes terminating action for the tests, inspections, and adjustments required by paragraph (a) of this AD.

Alternative Methods of Compliance

(i)(1) An alternative method of compliance or adjustment of the compliance time that provides an acceptable level of safety may be used if approved by the Manager, Seattle Aircraft Certification Office (ACO), FAA, Transport Airplane Directorate. Operators shall submit their requests through an appropriate FAA Principal Maintenance Inspector, who may add comments and then send it to the Manager, Seattle ACO.

(2) Alternative methods of compliance, approved previously in accordance with AD 95–13–12, amendment 39–9292, are approved as alternative methods of compliance with this AD.

Note 5: Information concerning the existence of approved alternative methods of compliance with this AD, if any, may be obtained from the Seattle ACO.

Special Flight Permits

(j) Special flight permits may be issued in accordance with sections 21.197 and 21.199 of the Federal Aviation Regulations (14 CFR 21.197 and 21.199) to operate the airplane to a location where the requirements of this AD can be accomplished.

Incorporation by Reference

(k) Except as provided by paragraphs (b), (d), and (e) of this AD, the actions shall be done in accordance with Boeing Service Bulletin 767–78–0047, Revision 3, dated July 28, 1994; Boeing Service Bulletin 767–78–0063, Revision 2, dated April 28, 1994; and Boeing Service Bulletin 767–78A0081, Revision 1, dated October 9, 1997; as applicable.

(1) The incorporation by reference of Boeing Service Bulletin 767–78A0081, Revision 1, dated October 9, 1997, is approved by the Director of the Federal Register in accordance with 5 U.S.C. 552(a) and 1 CFR part 51.

(2) The incorporation by reference of Boeing Service Bulletin 767–78–0047, Revision 3, dated July 28, 1994; and Boeing Service Bulletin 767–78–0063, Revision 2, dated April 28, 1994; was previously approved by the Director of the Federal Register, as of August 18, 1995 (60 FR 36976, July 19, 1995).

(3) Copies may be obtained from Boeing Commercial Airplane Group, P.O. Box 3707, Seattle, Washington 98124–2207. Copies may be inspected at the FAA, Transport Airplane Directorate, 1601 Lind Avenue, SW., Renton, Washington; or at the Office of the Federal Register, 800 North Capitol Street, NW., suite 700, Washington, DC.

(l) This amendment becomes effective on March 9, 2000.

Appendix 1

Thrust Reverser Electro-Mechanical Brake and CDU Cone Brake Test

1. General

A. This procedure contains steps to do two checks:

(1) A check of the holding torque of the electro-mechanical brake.

(2) A check of the holding torque of the CDU cone brake.

2. Electro-Mechanical Brake and CDU Cone Brake Torque Check (Fig. 1)

A. Prepare to do the checks:

(1) Open the fan cowl panels.

B. Do a check of the torque of the electro-mechanical brake:

(1) Do a check of the running torque of the thrust reverser system:

(a) Manually extend the thrust reverser six inches and measure the running torque.

(1) Make sure the torque is less than 10 pound-inches.

(2) Do a check of the electro-mechanical brake holding torque:

(a) Make sure the thrust reverser translating cowl is extended at least one inch.

(b) Make sure the CDU lock handle is released.

(c) Pull down on the manual release handle on the electro-mechanical brake until the handle fully engages the retaining clip.

Note: This will lock the electro-mechanical brake.

(d) With the manual drive lockout cover removed from the CDU, install a ¼ inch extension tool and dial-type torque wrench into the drive pad.

Note: You will need a 24-inch extension to provide adequate clearance for the torque wrench.

(e) Apply 90 pound-inches of torque to the system.

(1) The electro-mechanical brake system is working correctly if the torque is reached before you turn the wrench 450 degrees (1¼ turns).

(2) If the flexshaft turns more than 450 degrees before you reach the specified torque, you must replace the long flexshaft between the CDU and the upper angle gearbox.

(3) If you do not get 90 pound-inches of torque, you must replace the electro-mechanical brake.

(f) Release the torque by turning the wrench in the opposite direction until you read zero pound-inches.

(1) If the wrench does not return to within 30 degrees of initial starting point, you must replace the long flexshaft between the CDU and upper angle gearbox.

(3) Fully retract the thrust reverser.

C. Do a check of the CDU cone brake:

(1) Pull up on the manual release handle to unlock the electro-mechanical brake.

(2) Pull the manual brake release lever on the CDU to release the cone brake.

Note: This will release the pre-load tension that may occur during a stow cycle.

(3) Return the manual brake release lever to the locked position to engage the cone brake.

(4) Remove the two bolts that hold the lockout plate to the CDU and remove the lockout plate.

(5) Install a ¼-inch drive and a dial type torque wrench into the CDU drive pad.

CAUTION: DO NOT USE MORE THAN 100 POUND-INCHES OF TORQUE WHEN YOU DO THIS CHECK. EXCESSIVE TORQUE WILL DAMAGE THE CDU.

(6) Turn the torque wrench to try to manually extend the translating cowl until you get at lease 15-pound inches.

Note: The cone brake prevents movement in the extend direction only. If you try to measure the holding torque in the retract direction, you will get a false reading.

(a) If the torque is less than 15-pound-inches, you must replace the CDU.

D. Return the airplane to its usual condition:

(1) Fully retract the thrust reverser (unless already accomplished).

(2) Pull down on the manual release handle on the electro-mechanical brake until the handle fully engages the retaining clip (unless already accomplished).

Note: This will lock the electro-mechanical brake.

(3) Close the fan cowl panels.

BILLING CODE 4910–13–P

To ensure the integrity of the fail-safe features of the thrust reverser system

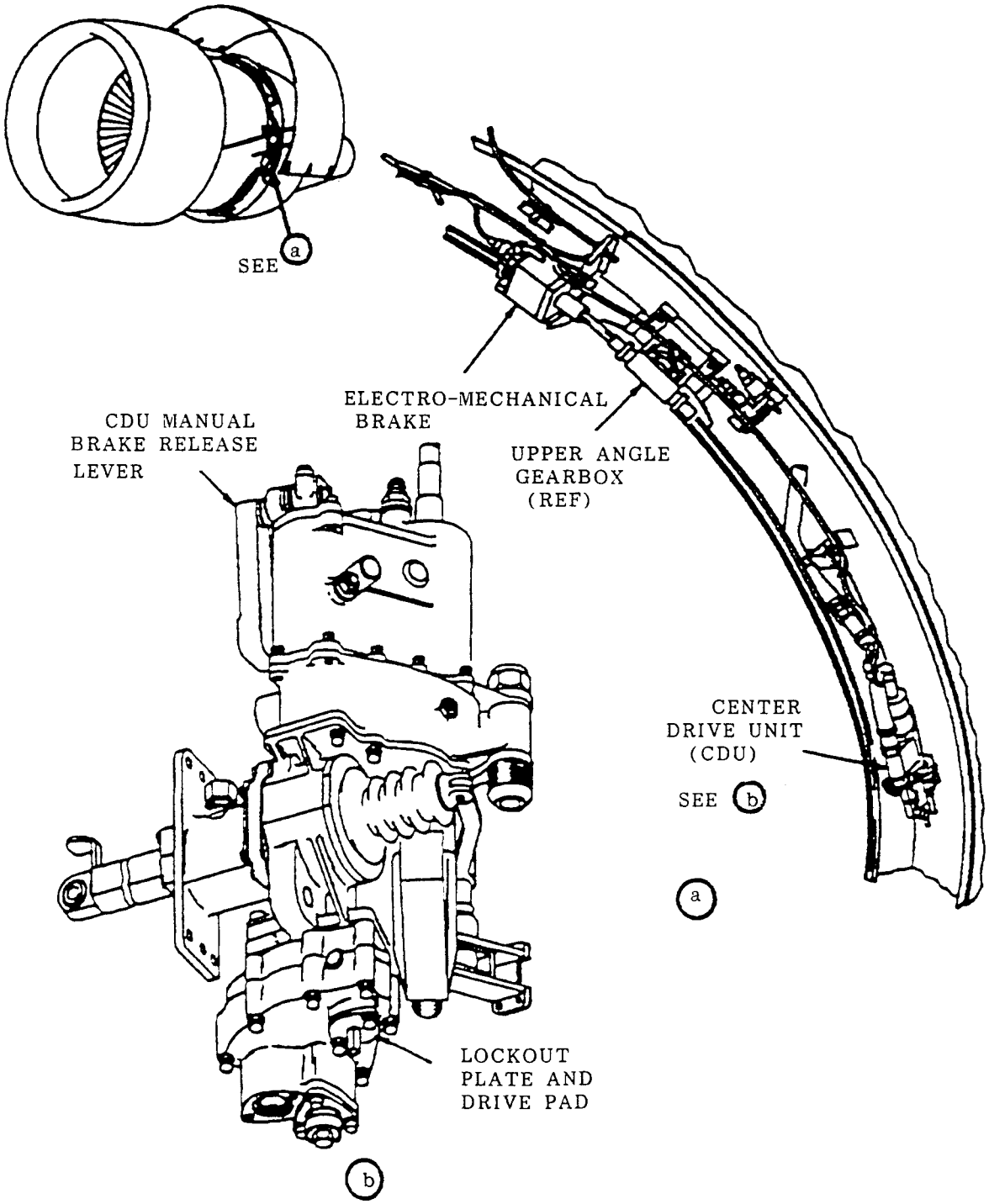

Electro-Mechanical Brake and CDU Cone Brake Torque Check
Figure 1

Issued in Renton, Washington, on January 24, 2000.

Donald L. Riggin,

Acting Manager, Transport Airplane Directorate, Aircraft Certification Service.

[FR Doc. 00–2087 Filed 2–2–00; 8:45 am]

BILLING CODE 4910–13–U

DEPARTMENT OF TRANSPORTATION

Federal Aviation Administration

14 CFR Part 39

[Docket No. 97–NM–323–AD; Amendment 39–11537; AD 2000–02–19]

RIN 2120–AA64

Airworthiness Directives; Boeing Model 727 Series Airplanes

AGENCY: Federal Aviation Administration, DOT.

ACTION: Final rule.

SUMMARY: This amendment supersedes an existing airworthiness directive (AD), applicable to certain Boeing Model 727 series airplanes, that currently requires repetitive inspections of the front spar web between the upper and lower seals of the center section of the wings, and repair, if necessary. That amendment also provides for an optional terminating modification for the repetitive inspections. This amendment requires a new terminating modification for the repetitive inspections. For certain airplanes, this amendment also requires new repetitive inspections to detect discrepancies of the front spar web. This amendment is prompted by a report indicating that the optional terminating modification in the existing AD does not adequately address the identified unsafe condition. The actions specified by this AD are intended to prevent fatigue cracks in the front spar web, which could lead to fuel leakage into the air-conditioning distribution bay and/or depressurization of the cabin, and to prevent fuel fumes in the cabin of the airplane.

DATES: Effective March 9, 2000.

The incorporation by reference of certain publications listed in the regulations is approved by the Director of the Federal Register as of March 9, 2000.

ADDRESSES: The service information referenced in this AD may be obtained from Boeing Commercial Airplane Group, P.O. Box 3707, Seattle, Washington 98124–2207. This information may be examined at the Federal Aviation Administration (FAA), Transport Airplane Directorate, Rules Docket, 1601 Lind Avenue, SW., Renton, Washington; or at the Office of the Federal Register, 800 North Capitol Street, NW., suite 700, Washington, DC.

FOR FURTHER INFORMATION CONTACT: Walter Sippel, Aerospace Engineer, Airframe Branch, ANM–120S, FAA, Transport Airplane Directorate, Seattle Aircraft Certification Office, 1601 Lind Avenue, SW., Renton, Washington 98055–4056; telephone (425) 227–2774; fax (425) 227–1181.

SUPPLEMENTARY INFORMATION: A proposal to amend part 39 of the Federal Aviation Regulations (14 CFR part 39) by superseding AD 90–02–16, amendment 39–6452 (55 FR 602, January 8, 1990), which is applicable to certain Boeing Model 727 series airplanes, was published in the **Federal Register** on August 10, 1999 (64 FR 43318). The action proposed to continue to require repetitive inspections of the front spar web between the upper and lower seals of the center section of the wings, and repair, if necessary. That action also proposed to require a new terminating modification for the repetitive inspections, and, for certain airplanes, new repetitive inspections to detect discrepancies of the front spar web.

Comments

Interested persons have been afforded an opportunity to participate in the making of this amendment. Due consideration has been given to the comments received.

Support for the Proposal

One commenter supports the proposed rule.

Request to Allow Alternative Inspection Method

One commenter, the manufacturer, requests that the proposed rule be revised to allow accomplishment of repetitive high frequency eddy current (HFEC) inspections to detect cracks in the front spar web, in lieu of the repetitive detailed visual inspections specified in paragraph (a) of the proposed rule. (In the proposed rule, the FAA stated that this AD would not provide for an HFEC inspection in lieu of the detailed visual inspection because Boeing Service Bulletin 727–57–0177, dated December 22, 1988, does not contain procedures for such an HFEC inspection, and, without such procedures, the FAA could not be sure that an HFEC inspection would detect cracks in a timely manner.) The commenter states that the option of an HFEC inspection would give operators more flexibility and reduce requests to the FAA for an alternative method of compliance. The commenter provides a reference for procedures for performing an HFEC inspection, and suggests a repetitive interval of 4,500 flight cycles. The commenter also states that it is revising Boeing Service Bulletin 727–57–0177 to incorporate procedures for an HFEC inspection and requests that the FAA delay issuance of the final rule until the release of Revision 4 of the service bulletin.

The FAA concurs with the commenter's requests. Since the issuance of the notice of proposed rulemaking (NPRM), the FAA has reviewed and approved Boeing Service Bulletin 727–57–0177, Revision 4, dated October 28, 1999. Revision 4 of the service bulletin is essentially similar to Revision 3 of the service bulletin, dated February 15, 1996. (Revision 3 of the service bulletin was cited in the NPRM as an appropriate source of service information for accomplishment of the proposed actions.) However, Revision 4 of the service bulletin also incorporates procedures for accomplishment of an HFEC inspection as an alternative to the close visual inspection. The FAA finds that the HFEC inspection described in the service bulletin would ensure that any cracks are detected in a timely manner. Therefore, paragraph (a) of this final rule has been revised to provide for accomplishment of repetitive HFEC inspections in lieu of the repetitive detailed visual inspection proposed in the NPRM. For clarity, paragraphs (a)(1) and (a)(2) have been added to specify appropriate sources of service information and repetitive inspection intervals for the two types of inspection. Also, the cost impact section of the final rule has been revised to provide an estimate of the cost for the HFEC inspection. In addition, paragraphs (b), (c), (d), and (e) of this final rule have been revised to allow accomplishment of the actions specified in those paragraphs in accordance with Revision 4 of the service bulletin.

Request to Correct Typographical Errors

One commenter requests that a reference to AD 90–02–15 in the ''Alternative Method of Compliance'' section of the NPRM be revised to refer to AD 90–02–16. The FAA concurs with the commenter's request and acknowledges that the correct reference should have been to AD 90–02–16. Paragraph (g)(2) of this AD has been revised accordingly.

The same commenter requests that a reference to Boeing Model 747 series airplanes in the ''Other Relevant Rulemaking'' section in the preamble of the NPRM be revised to refer instead to Boeing Model 727 series airplanes. The

FAA acknowledges that the correct reference should have been to Boeing Model 727 series airplanes; however, that section is not restated in the final rule and, therefore, no change to the final rule is necessary in this regard.

Conclusion

After careful review of the available data, including the comments noted above, the FAA has determined that air safety and the public interest require the adoption of the rule with the changes described previously. The FAA has determined that these changes will neither increase the economic burden on any operator nor increase the scope of the AD.

Cost Impact

There are approximately 1,524 Model 727 series airplanes of the affected design in the worldwide fleet. The FAA estimates that 1,098 airplanes of U.S. registry will be affected by this AD.

The detailed visual inspection that is currently required by AD 90–02–16, and retained in this AD as one option for compliance, and the HFEC inspection that may be accomplished in lieu of the detailed visual inspection, take approximately 3 work hours per airplane to accomplish, at an average labor rate of $60 per work hour. Based on these figures, the cost impact of either the currently required detailed visual or the HFEC inspection on U.S. operators is estimated to be $197,640, or $180 per airplane, per inspection cycle.

The modification that is required by this new AD will take approximately 360 work hours per airplane to accomplish, at an average labor rate of $60 per work hour. Required parts will cost approximately $1,430 per airplane. Based on these figures, the cost impact of the new requirements of this AD on U.S. operators is estimated to be $25,286,940, or $23,030 per airplane.

The visual inspection that is required for certain airplanes in this new AD action will take approximately 1 work hour per airplane to accomplish, at an average labor rate of $60 per work hour. Based on these figures, the cost impact of this inspection on U.S. operators is estimated to be $60 per airplane, per inspection cycle.

The cost impact figures discussed above are based on assumptions that no operator has yet accomplished any of the requirements of this AD action, and that no operator would accomplish those actions in the future if this AD were not adopted.

Regulatory Impact

The regulations adopted herein will not have substantial direct effects on the States, on the relationship between the national government and the States, or on the distribution of power and responsibilities among the various levels of government. Therefore, in accordance with Executive Order 12612, it is determined that this final rule does not have sufficient federalism implications to warrant the preparation of a Federalism Assessment.

For the reasons discussed above, I certify that this action: (1) Is not a ''significant regulatory action'' under Executive Order 12866; (2) is not a ''significant rule'' under DOT Regulatory Policies and Procedures (44 FR 11034, February 26, 1979); and (3) will not have a significant economic impact, positive or negative, on a substantial number of small entities under the criteria of the Regulatory Flexibility Act. A final evaluation has been prepared for this action and it is contained in the Rules Docket. A copy of it may be obtained from the Rules Docket at the location provided under the caption **ADDRESSES.**

List of Subjects in 14 CFR Part 39

Air transportation, Aircraft, Aviation safety, Incorporation by reference, Safety.

Adoption of the Amendment

Accordingly, pursuant to the authority delegated to me by the Administrator, the Federal Aviation Administration amends part 39 of the Federal Aviation Regulations (14 CFR part 39) as follows:

PART 39—AIRWORTHINESS DIRECTIVES

1. The authority citation for part 39 continues to read as follows:

Authority: 49 U.S.C. 106(g), 40113, 44701.

§ 39.13 [Amended]

2. Section 39.13 is amended by removing amendment 39–6452 (55 FR 602, January 8, 1990), and by adding a new airworthiness directive (AD), amendment 39–11537, to read as follows:

2000–02–19 Boeing: Amendment 39–11537. Docket 97–NM–323–AD. Supersedes AD 90–02–16, Amendment 39–6452.

Applicability: Model 727 series airplanes, as listed in Boeing Service Bulletin 727–57–0177, dated December 22, 1988; certificated in any category.

Note 1: This AD applies to each airplane identified in the preceding applicability provision, regardless of whether it has been modified, altered, or repaired in the area subject to the requirements of this AD. For airplanes that have been modified, altered, or repaired so that the performance of the requirements of this AD is affected, the owner/operator must request approval for an alternative method of compliance in accordance with paragraph (g)(1) of this AD. The request should include an assessment of the effect of the modification, alteration, or repair on the unsafe condition addressed by this AD; and, if the unsafe condition has not been eliminated, the request should include specific proposed actions to address it.

Compliance: Required as indicated, unless accomplished previously.

To prevent fatigue cracks of the front spar web of the center section of the wings, which could lead to fuel leakage and/or depressurization of the cabin, or to prevent fuel fumes in the cabin of the airplane, accomplish the following:

Repetitive Inspections

(a) For areas on which the front spar web between the upper and lower seals of the center section of the wings has not been repaired or modified in accordance with Figure 2 or 3 of Boeing Service Bulletin 727–57–0177, dated December 22, 1988; Revision 1, dated November 21, 1991; or Revision 2, dated September 16, 1993: Prior to the accumulation of 40,000 total flight cycles, or within the next 2,300 flight cycles after February 12, 1990 (effective date of AD 90–02–16, amendment 39–6452), whichever occurs later, unless accomplished within the last 700 flight cycles, accomplish the requirements of either paragraph (a)(1) or (a)(2) of this AD.

(1) Perform a detailed visual inspection to detect cracks in the front spar web, in accordance with Figure 1 of Boeing Service Bulletin 727–57–0177, dated December 22, 1988; Revision 1, dated November 21, 1991; Revision 2, dated September 16, 1993; Revision 3, dated February 15, 1996; or Revision 4, dated October 28, 1999. Repeat the detailed visual inspection thereafter at intervals not to exceed 3,000 flight cycles, until accomplishment of the requirements specified in either paragraph (b) or (c) of this AD.

Note 2: For the purposes of this AD, a detailed visual inspection is defined as: ''An intensive visual examination of a specific structural area, system, installation, or assembly to detect damage, failure, or irregularity. Available lighting is normally supplemented with a direct source of good lighting at intensity deemed appropriate by the inspector. Inspection aids such as mirror, magnifying lenses, etc., may be used. Surface cleaning and elaborate access procedures may be required.''

(2) Perform a high frequency eddy current (HFEC) inspection to detect cracks in the front spar web, in accordance with Boeing Service Bulletin 727–57–0177, Revision 4, dated October 28, 1999. Repeat the HFEC inspection thereafter at intervals not to exceed 4,500 flight cycles, until accomplishment of the requirements specified in either paragraph (b) or (c) of this AD.

Note 3: Accomplishment of the high frequency eddy current (HFEC) inspection required by AD 90–02–16, is considered acceptable for compliance with the initial detailed visual inspection required by paragraph (a) of this AD.

Repair of Cracks

(b) If any crack is detected during any inspection required by paragraph (a) of this AD, prior to further flight, accomplish the actions specified in either paragraph (b)(1) or (b)(2) of this AD, as applicable. Accomplishment of the repair constitutes terminating action for the repetitive inspection requirements of paragraph (a) of this AD for that repaired area.

(1) For airplanes equipped with integral fuel tanks in the center section of the wings: Repair in accordance with Figure 2 of Boeing Service Bulletin 727–57–0177, Revision 3, dated February 15, 1996; or Revision 4, dated October 28, 1999.

(2) For airplanes not equipped with integral fuel tanks in the center section of the wings: Repair in accordance with Figure 2 of Boeing Service Bulletin 727–57–0177, dated December 22, 1988, Revision 1, dated November 21, 1991; Revision 2, dated September 16, 1993; Revision 3, dated February 15, 1996; or Revision 4, dated October 28, 1999.

Note 4: Where there are differences between the referenced service bulletins and this AD, the AD prevails.

Modification

(c) Except as provided by paragraph (d) of this AD, prior to the accumulation of 60,000 total flight cycles, or within 48 months after the effective date of this AD, whichever occurs later, accomplish the actions specified in either paragraph (c)(1) or (c)(2) of this AD, as applicable. Accomplishment of this action constitutes terminating action for the repetitive inspection requirements of paragraph (a) of this AD.

(1) For airplanes equipped with integral fuel tanks in the center section of the wings: Modify the front spar web, between the upper and lower seals, of the center section of the wings, in accordance with Part I of the Accomplishment Instructions of Boeing Service Bulletin 727–57–0177, Revision 3, dated February 15, 1996; or Revision 4, dated October 28, 1999.

(2) For airplanes not equipped with integral fuel tanks in the center section of the wings: Modify the front spar web, between the upper and lower seals, of the center section of the wings, in accordance with Boeing Service Bulletin 727–57–0177, dated December 22, 1988, Revision 1, dated November 21, 1991; Revision 2, dated September 16, 1993; Revision 3, dated February 15, 1996; or Revision 4, dated October 28, 1999.

Repetitive Visual Inspections and Repair/ Modification of the Front Spar Web

(d) For areas on which the front spar web between the upper and lower seals of the center section of the wings has been repaired or modified in accordance with Figure 2 or 3 of Boeing Service Bulletin 727–57–0177, dated December 22, 1988; Revision 1, dated November 21, 1991; or Revision 2, dated September 16, 1993: Accomplish the actions required by either paragraph (d)(1) or (d)(2) of this AD, as applicable.

(1) For airplanes not equipped with integral fuel tanks in the center section of the wings: No further action is required by this AD for those areas repaired or modified.

(2) For airplanes equipped with integral fuel tanks in the center section of the wings: Accomplish the actions required by both paragraphs (d)(2)(i) and (d)(2)(ii) of this AD.

(i) Within 500 flight cycles after the effective date of this AD, perform a detailed visual inspection of the front spar web to detect fuel leakage and penetrations in the secondary fuel barrier, and to verify the installation of the secondary fuel barrier; in accordance with Boeing Service Bulletin 727–57–0177, Revision 3, dated February 15, 1996; or Revision 4, dated October 28, 1999. Repeat the visual inspection thereafter at intervals not to exceed 1,500 flight cycles, until accomplishment of the actions required by paragraph (d)(2)(ii) of this AD.

(ii) Prior to the accumulation of 14,000 flight cycles, or within 96 months after the effective date of this AD, whichever occurs later, repair/modify the front spar web in accordance with Part II of the Accomplishment Instructions of Boeing Service Bulletin 727–57–0177, Revision 3, dated February 15, 1996; or Revision 4, dated October 28, 1999. Accomplishment of this action constitutes terminating action for the repetitive inspection requirements of paragraph (d)(2)(i) of this AD for that repaired/modified area.

Follow-On Corrective Action

(e) During any inspection required by paragraph (d)(2)(i) of this AD, if any fuel leakage or penetration in the secondary fuel barrier is detected, or if any secondary fuel barrier is verified as not being installed, prior to further flight, repair in accordance with Part II of the Accomplishment Instructions of Boeing Service Bulletin 727–57–0177, Revision 3, dated February 15, 1996; or Revision 4, dated October 28, 1999. Accomplishment of this action constitutes terminating action for the repetitive inspection requirements of paragraph (d)(2)(i) of this AD for that repaired area.

Terminating Action for AD 94–05–04

(f) Accomplishment of the actions required by paragraph (b), (c), (d)(2)(ii), or (e) of this AD constitutes terminating action for the requirements specified in paragraph (a) of AD 94–05–04, amendment 39–8842 (59 FR 13442, March 22, 1994), with respect to the modification specified in Boeing Service Bulletin 727–57–0177, dated December 22, 1988. This service bulletin is one of many service bulletins referenced in Boeing Document D6–54860, Revision G, Appendix A.3, dated March 5, 1993. All other service bulletins referenced in that document still apply.

Alternative Method of Compliance

(g)(1) An alternative method of compliance or adjustment of the compliance time that provides an acceptable level of safety may be used if approved by the Manager, Seattle Aircraft Certification Office (ACO), FAA, Transport Airplane Directorate. Operators shall submit their requests through an appropriate FAA Principal Maintenance Inspector, who may add comments and then send it to the Manager, Seattle ACO.

Note 5: Information concerning the existence of approved alternative methods of compliance with this AD, if any, may be obtained from the Seattle ACO.

(2) For airplanes not equipped with integral fuel tanks in the center section of the wings: Alternative methods of compliance, approved previously in accordance with AD 90–02–16, amendment 39–6452, are approved as alternative methods of compliance with this AD. For airplanes equipped with integral fuel tanks in the center section of the wings: Alternative methods of compliance, approved previously in accordance with AD 90–02–16, are NOT approved as alternative methods of compliance with this AD.

Special Flight Permits

(h) Special flight permits may be issued in accordance with §§ 21.197 and 21.199 of the Federal Aviation Regulations (14 CFR 21.197 and 21.199) to operate the airplane to a location where the requirements of this AD can be accomplished.

Incorporation by Reference

(i) The actions shall be done in accordance with Boeing Service Bulletin 727–57–0177, dated December 22, 1988; Boeing Service Bulletin 727–57–0177, Revision 1, dated November 21, 1991; Boeing Service Bulletin 727–57–0177, Revision 2, dated September 16, 1993; Boeing Service Bulletin 727–57–0177, Revision 3, dated February 15, 1996; or Boeing Service Bulletin 727–57–0177, Revision 4, dated October 28, 1999; as applicable. This incorporation by reference was approved by the Director of the **Federal Register** in accordance with 5 U.S.C. 552(a) and 1 CFR part 51. Copies may be obtained from Boeing Commercial Airplane Group, P.O. Box 3707, Seattle, Washington 98124–2207. Copies may be inspected at the FAA, Transport Airplane Directorate, 1601 Lind Avenue, SW., Renton, Washington; or at the Office of the Federal Register, 800 North Capitol Street, NW., suite 700, Washington, DC.

(j) This amendment becomes effective on March 9, 2000.

Issued in Renton, Washington, on January 24, 2000.

Donald L. Riggin,

Acting Manager, Transport Airplane Directorate, Aircraft Certification Service.

[FR Doc. 00–2086 Filed 2–2–00; 8:45 am]

BILLING CODE 4910–13–U

DEPARTMENT OF TRANSPORTATION

Federal Aviation Administration

14 CFR Part 39

[Docket No. 97–NM–133–AD; Amendment 39–11536; AD 2000–02–18]

RIN 2120–AA64

Airworthiness Directives; Boeing Model 737–100, –200, –300, –400, and –500 Series Airplanes

AGENCY: Federal Aviation Administration, DOT.

ACTION: Final rule.

SUMMARY: This amendment supersedes an existing airworthiness directive (AD), applicable to certain Boeing Model 737–100, –200, –300, –400, and –500 series airplanes; that currently requires an inspection of reworked aileron/elevator power control units (PCU's) and rudder PCU's to determine if reworked PCU manifold cylinder bores containing chrome plating are installed, and replacement of the cylinder bores with cylinder bores that have been reworked using the oversize method or the steel sleeve method, if necessary. This amendment, among other items, expands the applicability of the existing AD to include airplanes equipped with certain rudder PCU's. This amendment is prompted by a review of the design of the flight control systems on Model 737 series airplanes. The actions specified by this AD are intended to prevent a reduced rate of movement of the elevator, aileron, or rudder due to contamination of hydraulic fluid from chrome plating chips; such reduced rate of movement, if not corrected, could result in reduced controllability of the airplane.

DATES: Effective March 9, 2000.

The incorporation by reference of certain publications listed in the regulations is approved by the Director of the Federal Register as of March 9, 2000.

ADDRESSES: The service information referenced in this AD may be obtained from Boeing Commercial Airplane Group, P.O. Box 3707, Seattle, Washington 98124–2207. This information may be examined at the Federal Aviation Administration (FAA), Transport Airplane Directorate, Rules Docket, 1601 Lind Avenue, SW., Renton, Washington; or at the Office of the Federal Register, 800 North Capitol Street, NW., Suite 700, Washington, DC.

FOR FURTHER INFORMATION CONTACT: Don Kurle, Senior Engineer, Systems and Equipment Branch, ANM–130S, FAA, Transport Airplane Directorate, Seattle Aircraft Certification Office, 1601 Lind Avenue, SW., Renton, Washington 98055–4056; telephone (425) 227–2798; fax (425) 227–1181.

SUPPLEMENTARY INFORMATION: A proposal to amend part 39 of the Federal Aviation Regulations (14 CFR part 39) by superseding AD 97–09–14, amendment 39–10010 (62 FR 24008, May 2, 1997); which is applicable to certain Boeing Model 737–100, –200, –300, –400, and –500 series airplanes; was published as a supplemental notice of proposed rulemaking (NPRM) in the **Federal Register** on April 26, 1999 (64 FR 20226). The action proposed to continue to require an inspection of reworked aileron/elevator power control units (PCU) and rudder PCU's to determine if reworked PCU manifold cylinder bores containing chrome plating are installed, and replacement of the cylinder bores with bores that have been reworked using the oversize method or the steel sleeve method, if necessary. The action also proposed to require expanding the applicability of the existing AD to include airplanes equipped with certain rudder PCU's.

Comments

Interested persons have been afforded an opportunity to participate in the making of this amendment. Due consideration has been given to the comments received.

Support for the Supplemental NPRM

One commenter states that it supports the supplemental NPRM and will be able to meet the requirements as proposed.

Request To Revise Applicability Statement

One commenter recommends that the order of applicability should be reversed to ''serial number less than xxx, except those with 'ss','' to minimize confusion.

The FAA concurs with the intent of the commenter's request. The FAA concurs that the applicability statement in the supplemental NPRM may be confusing to operators. However, the FAA finds that it would be more clear to state only what serial numbers are *excluded* from the applicability of the AD, rather than stating certain serial numbers that are included as well as certain serial numbers that are excluded from the applicability of this AD. Therefore, the applicability statement of this final rule has been revised to state that this AD applies to ''Model 737–100, –200, –300, –400, and –500 series airplanes; * * * equipped with:

- A rudder power control unit (PCU), having part number (P/N) 65–44861–( ), P/N 65C37052–( ), or P/N 65C37053–( ), except those having a serial number of 1252A or greater or having a serial number that contains 'ss'; or
- An aileron or elevator PCU having P/N 65–44761–( ), except those having a serial number of 5360A or greater or having a serial number that contains 'ss.' ''

In addition, paragraphs (a) and (d) of this final rule have been revised similarly.

Request To Clarify Acceptable Methods of Inspection

Two commenters request that the wording of paragraph (a) of the supplemental NPRM be revised to clarify the FAA's intent. The commenters point out that paragraph (a) of the supplemental NPRM reads, ''Perform an inspection of reworked or overhauled aileron and elevator PCU's * * * in accordance with Boeing Service Letter 737–SL–27–30, dated April 1, 1985.'' The commenters state that Boeing Service Letter 737–SL–27–30 does not contain information on means of inspection of PCU cylinder bores that have been reworked or repaired using chrome plating. One of the commenters recommends that determination of whether cylinder bores have chrome plating should be based on either maintenance records or physical inspection of the PCU's. The other commenter recommends that, to prevent confusion, paragraph (a) be revised to read, ''Perform an inspection of reworked or overhauled PCU's to determine if reworked manifold bores containing chrome plating as described in Boeing Service Letter 737–SL–27–30 are installed * * *.'' The commenters state that these recommendations are also applicable to paragraph (d).

The FAA concurs with the commenters' request. Paragraph (a) has been revised to clarify acceptable methods to determine whether the PCU cylinder bores have chrome plating. Paragraph (a)(1) has been added to the final rule to allow inspection of maintenance records to determine whether the PCU has a chrome-plate-repaired cylinder bore.

Paragraphs (a)(1)(i), (a)(1)(ii), (a)(1)(iii), and (a)(1)(iv) identify criteria that demonstrate that a PCU does not have a chrome-plated cylinder bore.

Paragraph (a)(2) has been added to specify a physical inspection of the PCU to detect vibroengraved text ''737–SL–27–30'', as evidence of prior inspection to verify that the PCU does not contain a cylinder bore repaired with chrome plating.

Paragraph (a)(3) has been added to specify performance of the PCU

Non-Destructive Test (NDT) as identified in Boeing Service Letter 737–SL–27–120, dated January 28, 1998.

Compliance times for performance of the requirements of AD 97–09–14, which were contained in paragraphs (a)(1) and (a)(2) of the supplemental NPRM, are unchanged, but have been incorporated within paragraph (a) of the final rule.

Paragraph (d) of the final rule has been revised to be similar to the revised paragraph (a) and to refer to paragraphs (a)(1), (a)(2), and (a)(3) for inspection instructions.

Request for Explicit Approval of NDT Inspection

One commenter requests that the NDT inspection noted in Boeing Service Letter 737–SL–27–120 be expressly approved as meeting the requirements of paragraphs (a) and (d) of the proposed AD. The commenter states that it believes that this is preferable to the wording of the supplemental NPRM, which states that alternative methods of compliance, approved previously in accordance with AD 97–09–14 are approved as alternative methods of compliance for this AD.

The FAA concurs with the intent of the commenter's request. As stated previously, paragraph (a)(3) has been added to list the NDT inspection method noted in Boeing Service Letter 737–SL–27–120 as an approved method to determine the presence of chrome plating. No additional change to the rule is necessary in this regard.

Request To Revise Means of Compliance

One commenter requests that paragraph (b) of the proposed rule be revised to allow replacement of the PCU in accordance with the operator's FAA-approved maintenance procedures for removal and installation of the affected aileron and elevator PCU's and rudder PCU's. The commenter states that reference to the Boeing Airplane Maintenance Manual as the means for removal and replacement of an affected PCU may result in difficulties for operators, because their approved means of airplane maintenance may not be the Boeing 737 Airplane Maintenance Manual. (An individual operator has the option to develop its own FAA-approved maintenance program.)

The FAA concurs with the commenter's request. Paragraphs (b) and (e) of this AD have been revised to add an option to perform the replacement of the PCU in accordance with procedures in the operator's FAA-approved maintenance program that are equivalent to the Boeing AMM procedures.

Request To Replace PCU Instead of Cylinder Bore

One commenter requests that paragraph (b)(1) be revised to require replacement of the PCU with a PCU that does not have a chrome-plate-repaired cylinder bore, instead of requiring replacement of the cylinder bore. The commenter cites no rationale for its request. Additionally, the commenter requests that the requirement be revised to allow use of any PCU that has been confirmed to not contain a chrome-plated cylinder bore. The commenter states that the request to revise paragraph (b)(1) is also applicable to paragraph (e)(1) of the AD.

The FAA concurs with the commenter's request. The FAA finds that it is not possible to remove the cylinder bore without removing the PCU from the airplane. Paragraphs (b)(1) and (e)(1) have been revised to require replacement of any PCU with a chrome-plate-repaired cylinder bore with a PCU that does not have a chrome-plate-repaired cylinder bore, instead of replacement of the chrome-plate-repaired cylinder bores.

Request To Correct Typographical Error

One commenter requests that the reference to ''a PCU having serial number of 5306A or higher'' in paragraph (b)(2) of the supplemental NPRM be revised to reflect the correct serial number, which is 5360A or higher. The FAA concurs, and has corrected paragraph (b)(2) to refer to serial number 5360A or higher.

Request To Revise Spares Paragraphs

One commenter requests that paragraphs (c) and (f) of the supplemental NPRM be revised to refer to units that are defined as acceptable for installation per paragraphs (b) and (e), respectively, of the AD. The commenter states that Boeing Service Letter 737–SL–27–30 does not define inspection criteria, and the definition of acceptable units is not complete in the supplemental NPRM.

The FAA concurs with the commenter's request. Paragraphs (c) and (f) have been revised to refer to units eligible as replacement PCU's per paragraphs (b) and (e), respectively.

Request To Allow PCU Disassembly and Inspection of Cylinder Bore

One commenter requests that the proposed AD be revised to allow an option to perform PCU disassembly and inspection of the cylinder bore for chrome plating as an alternative to the NDT of the PCU, which, as stated previously, is specified in paragraph (a)(3) of the final rule.

The FAA does not concur with the commenter's request. The manufacturer has not provided the FAA with any specific requirements or instructions to perform such an inspection. Therefore, the FAA cannot include such an option in the AD. However, operators that wish to perform PCU disassembly and inspection of the cylinder bore for chrome plating as an alternative to the NDT of the PCU specified in paragraph (a)(3) of this AD, may request approval of a method of and criteria for such disassembly and inspection as an alternative method of compliance, in accordance with paragraph (g)(1) of the AD.

Explanation of Additional Change From the Supplemental NPRM

Paragraphs (b) and (e) of the supplemental NPRM state that the actions specified in those paragraphs are to be accomplished in accordance with certain chapters of the Boeing Airplane Maintenance Manuals. The FAA finds that specific revisions of the airplane maintenance manuals are not required for accomplishment of the actions specified in those paragraphs. Therefore, paragraphs (b) and (e) of this AD have been revised to call for use of certain chapters of the Boeing Airplane Maintenance Manuals as guidance for procedures to replace the PCU's.

Conclusion

After careful review of the available data, including the comments noted above, the FAA has determined that air safety and the public interest require the adoption of the rule with the changes previously described. The FAA has determined that these changes will neither increase the economic burden on any operator nor increase the scope of the AD.

Cost Impact

There are approximately 2,675 Model 737 series airplanes of the affected design in the worldwide fleet. The FAA estimates that 1,091 airplanes of U.S. registry will be affected by this AD.

The actions that are currently required by AD 97–09–14 take approximately 5 work hours per airplane to accomplish, at an average labor rate of $60 per work hour. Based on these figures, the cost impact of the currently required actions on U.S. operators is estimated to be $327,300, or $300 per airplane.

The new actions that are required by this new AD will take approximately 5

work hours per airplane to accomplish, at an average labor rate of $60 per work hour. Based on these figures, the cost impact of the new requirements of this AD on U.S. operators is estimated to be $327,300, or $300 per airplane.

The cost impact figures discussed above are based on assumptions that no operator has yet accomplished any of the requirements of this AD action, and that no operator would accomplish those actions in the future if this AD were not adopted.

Regulatory Impact

The regulations adopted herein will not have substantial direct effects on the States, on the relationship between the national government and the States, or on the distribution of power and responsibilities among the various levels of government. Therefore, in accordance with Executive Order 12612, it is determined that this final rule does not have sufficient federalism implications to warrant the preparation of a Federalism Assessment.

For the reasons discussed above, I certify that this action: (1) Is not a ''significant regulatory action'' under Executive Order 12866; (2) is not a ''significant rule'' under DOT Regulatory Policies and Procedures (44 FR 11034, February 26, 1979); and (3) will not have a significant economic impact, positive or negative, on a substantial number of small entities under the criteria of the Regulatory Flexibility Act. A final evaluation has been prepared for this action and it is contained in the Rules Docket. A copy of it may be obtained from the Rules Docket at the location provided under the caption **ADDRESSES.**

List of Subjects in 14 CFR Part 39

Air transportation, Aircraft, Aviation safety, Incorporation by reference, Safety.

Adoption of the Amendment

Accordingly, pursuant to the authority delegated to me by the Administrator, the Federal Aviation Administration amends part 39 of the Federal Aviation Regulations (14 CFR part 39) as follows:

PART 39—AIRWORTHINESS DIRECTIVES

1. The authority citation for part 39 continues to read as follows:

Authority: 49 U.S.C. 106(g), 40113, 44701.

§ 39.13 [Amended]

2. Section 39.13 is amended by removing amendment 39–10010 (62 FR 24008, May 2, 1997), and by adding a new airworthiness directive (AD), amendment 39–11536, to read as follows:

2000–02–18 Boeing: Amendment 39–11536. Docket 97–NM–133–AD. Supersedes AD 97–09–14, Amendment 39–10010.

Applicability: Model 737–100, –200, –300, –400, and –500 series airplanes; certificated in any category; equipped with:

• A rudder power control unit (PCU), having part number (P/N) 65–44861–(D), P/N 65C37052–( ), or P/N 65C37053–( ), except those having a serial number of 1252A or greater or having a serial number that contains ''ss''; or

•An aileron or elevator PCU having P/N 65–44761–( ), except those having a serial number of 5360A or greater or having a serial number that contains ''ss.''

Note 1: This AD applies to each airplane identified in the preceding applicability provision, regardless of whether it has been modified, altered, or repaired in the area subject to the requirements of this AD. For airplanes that have been modified, altered, or repaired so that the performance of the requirements of this AD is affected, the owner/operator must request approval for an alternative method of compliance in accordance with paragraph (g)(1) of this AD. The request should include an assessment of the effect of the modification, alteration, or repair on the unsafe condition addressed by this AD; and, if the unsafe condition has not been eliminated, the request should include specific proposed actions to address it.

Compliance: Required as indicated, unless accomplished previously.

To prevent a reduced rate of movement of the elevator, aileron, or rudder, which, if not corrected, could result in reduced controllability of the airplane, accomplish the following:

Partial Restatement of Requirements of AD 97–09–14

(a) Within 5 years or 15,000 flight hours after June 6, 1997 (the effective date of AD 97–09–14, amendment 39–10010), or at the next time the PCU is sent to a repair facility, whichever occurs first: Perform an inspection of aileron and elevator PCU's having P/N 65–44761–( ), except those having a serial number of 5360A or greater or having a serial number that contains ''ss''; and rudder PCU's having P/N 65–44861–( ), except those having a serial number of 1252A or greater or having a serial number that contains ''ss''; to determine whether a PCU manifold has a reworked or repaired cylinder bore(s) containing chrome plating. Accomplish this inspection as specified in paragraph (a)(1), (a)(2), or (a)(3) of this AD.

(1) Inspect the airplane maintenance records to determine whether a PCU with a chrome-plate-repaired cylinder bore is installed. If inspection of the maintenance records shows that the PCU meets one of the criteria specified in paragraph (a)(1)(i), (a)(1)(ii), (a)(1)(iii), or (a)(1)(iv) of this AD, no further action is required by this AD for that PCU.

(i) The PCU has never been reworked or repaired.

Note 2: Chrome plating of the cylinder bores was limited to repair and was not used for new manufacture of PCU's or replacement manifolds.

(ii) The PCU has been reworked or repaired, but chrome plating was not used as the means of PCU cylinder bore repair.

(iii) The PCU has been reworked or repaired, but a manifold manufactured after December 31, 1985, was used to replace the cylinder bore.

Note 3: No PCU manifold manufactured after December 31, 1985, was reworked or repaired using chrome plating.

(iv) The PCU has been reworked or repaired using chrome plating of the cylinder bore, but the cylinder bore has subsequently been reworked to remove the chrome plating using the cylinder bore oversize method or steel sleeve method specified in Boeing Service Letter 737–SL–27–30, ''Aileron/Elevator and Rudder Power Control Unit Cylinder Bore Rework,'' dated April 1, 1985.

(2) Inspect the PCU to determine whether the PCU is marked with vibroengraved text ''737–SL–27–30'' as evidence of prior inspection, as specified in Boeing Service Letter 737–SL–27–120,'' Aileron, Elevator, and Rudder Power Control Unit Cylinder Bore Material Identification Method,'' dated January 28, 1998.

(3) Perform the PCU Non-Destructive Test (NDT) in accordance with Boeing Service Letter 737–SL–27–120, dated January 28, 1998, to determine whether chrome plating exists on the cylinder bore surface.

Replacement Required by AD 97–09–14

(b) If any reworked PCU manifold cylinder bores containing chrome plating are found to be installed during the inspection required by paragraph (a) of this AD: Prior to further flight, accomplish the actions specified in paragraph (b)(1), (b)(2), (b)(3), or (b)(4) of this AD, using as guidance the following procedures of the Boeing 737 Airplane Maintenance Manual, as applicable: Chapter 27–11–71 (for Model 737–100, –200, –300, –400, and –500 series airplanes), Chapter 27–31–101 (for Model 737–100 and –200 series airplanes), or Chapter 27–31–14 (for Model 737–300, –400, and –500 series

airplanes), or equivalent procedures in the operator's FAA-approved maintenance program.

(1) Replace the PCU with a PCU with cylinder bores that were manufactured after December 31, 1985, or with a PCU with cylinder bores that have been reworked using the oversize method or the steel sleeve method specified in Boeing Service Letter 737–SL–27–30, dated April 1, 1985.

(2) Replace the aileron or elevator PCU with a PCU containing the letters ''ss'' in its serial number or with a PCU having a serial number of 5360A or higher.

(3) Replace the rudder PCU with a PCU containing the letters ''ss'' in its serial number or with a PCU having a serial number of 1252A or higher.

(4) Replace the PCU with a PCU for which paragraph (a) of this AD specifies that no further action is required.

Spares

(c) As of June 6, 1997, no person shall install a manifold cylinder bore containing chrome plating, or an aileron or elevator PCU having P/N 65–44761–( ) that has a manifold cylinder bore containing chrome plating, or a rudder PCU having P/N 65–44861–( ) that has a manifold cylinder bore containing chrome plating, on any airplane, unless the PCU is eligible as a replacement PCU, as specified in paragraph (b) of this AD.

New Requirements of This AD

Inspection

(d) Within 5 years or 15,000 flight hours after the effective date of this AD, or at the next time the PCU is sent to a repair facility, whichever occurs first: Perform an inspection of any rudder PCU having P/N 65C37052–( ) or P/N 65C37053–( ), except those having a serial number of 1252A or greater or having a serial number that contains ''ss,'' to determine if the PCU manifold has a reworked or overhauled cylinder bore(s) containing chrome plating. Perform the inspection in accordance with paragraph (a)(1), (a)(2), or (a)(3) of this AD.

Replacement

(e) If any reworked or overhauled PCU manifold cylinder bores containing chrome plating are found to be installed during the inspection required by paragraph (d) of this AD: Prior to further flight, accomplish the actions specified in paragraph (e)(1), (e)(2), or (e)(3) of this AD, using, as guidance, procedures specified in Chapter 27–21–91 Boeing 737 Airplane Maintenance Manual (for Model 737–100, –200, –300, –400, and –500 series airplanes), or equivalent procedures in the operator's FAA-approved maintenance program.

(1) Replace the PCU with a PCU with cylinder bores that were manufactured after December 31, 1985, or with a PCU with cylinder bores that have been reworked using the oversize method or the steel sleeve method specified in Boeing Service Letter 737–SL–27–30, dated April 1, 1985.

(2) Replace the rudder PCU with a PCU containing the letters ''ss'' in its serial number or with a PCU having a serial number of 1252A or higher.

(3) Replace the rudder PCU with a rudder PCU for which paragraph (a) of this AD specifies that no further action is required.

Spares

(f) As of the effective date of this AD, no person shall install a rudder PCU having P/N 65C37052–( ) or P/N 65C37053–( ) that has a manifold cylinder bore containing chrome plating, on any airplane, unless the PCU is eligible as a replacement PCU per paragraph (e) of this AD.

Alternative Methods of Compliance

(g)(1) An alternative method of compliance or adjustment of the compliance time that provides an acceptable level of safety may be used if approved by the Manager, Seattle Aircraft Certification Office (ACO), FAA, Transport Airplane Directorate. Operators shall submit their requests through an appropriate FAA Principal Maintenance Inspector, who may add comments and then send it to the Manager, Seattle ACO.

(2) Alternative methods of compliance, approved previously for AD 97–09–14, amendment 39–10010, are approved as alternative methods of compliance with this AD.

Note 4: Information concerning the existence of approved alternative methods of compliance with this AD, if any, may be obtained from the Manager, Seattle ACO.

Special Flight Permits

(h) Special flight permits may be issued in accordance with sections 21.197 and 21.199 of the Federal Aviation Regulations (14 CFR 21.197 and 21.199) to operate the airplane to a location where the requirements of this AD can be accomplished.

Incorporation by Reference

(i) The PCU NDT shall be done in accordance with Boeing Service Letter 737–SL–27–120, dated January 28, 1998. This incorporation by reference was approved by the Director of the Federal Register in accordance with 5 U.S.C. 552(a) and 1 CFR part 51. Copies may be obtained from Boeing Commercial Airplane Group, P.O. Box 3707, Seattle, Washington 98124–2207. Copies may be inspected at the FAA, Transport Airplane Directorate, 1601 Lind Avenue, SW., Renton, Washington; or at the Office of the Federal Register, 800 North Capitol Street, NW., Suite 700, Washington, DC.

(j) This amendment becomes effective on March 9, 2000.

Issued in Renton, Washington, on January 24, 2000.

Donald L. Riggin,

Acting Manager, Transport Airplane Directorate, Aircraft Certification Service.

[FR Doc. 00–2085 Filed 2–2–00; 8:45 am]

BILLING CODE 4910–13–U

DEPARTMENT OF TRANSPORTATION

Federal Aviation Administration

14 CFR Part 39

[Docket No. 98–NM–381–AD; Amendment 39–11541; AD 2000–02–23]

RIN 2120–AA64

Airworthiness Directives; McDonnell Douglas Model DC–9, DC–9–80, and C–9 (Military) Series Airplanes, and Model MD–88 Airplanes

AGENCY: Federal Aviation Administration, DOT.

ACTION: Final rule.

SUMMARY: This amendment adopts a new airworthiness directive (AD), applicable to certain McDonnell Douglas Model DC–9, DC–9–80, and C–9 (military) series airplanes, and Model MD–88 airplanes, that requires a one-time inspection to determine the type of engine ignition switch installed in the hinged forward overhead switch panel, and replacement of certain rotary ignition switches with new design rotary ignition switches. This amendment is prompted by reports of smoke in the flight compartment during engine ignition selection. The actions specified by this AD are intended to prevent an internal electrical short in the engine ignition switch, which could result in smoke in the flight compartment.

DATES: Effective March 9, 2000.

The incorporation by reference of certain publications listed in the regulations is approved by the Director of the Federal Register as of March 9, 2000.

ADDRESSES: The service information referenced in this AD may be obtained

from Boeing Commercial Aircraft Group, Long Beach Division, 3855 Lakewood Boulevard, Long Beach, California 90846, Attention: Technical Publications Business Administration, Dept. C1–L51 (2–60). This information may be examined at the Federal Aviation Administration (FAA), Transport Airplane Directorate, Rules Docket, 1601 Lind Avenue, SW., Renton, Washington; or at the FAA, Transport Airplane Directorate, Los Angeles Aircraft Certification Office, 3960 Paramount Boulevard, Lakewood, California; or at the Office of the Federal Register, 800 North Capitol Street, NW., suite 700, Washington, DC.

FOR FURTHER INFORMATION CONTACT: Robert Baitoo, Aerospace Engineer, Propulsion Branch, ANM–140L, FAA, Transport Airplane Directorate, Los Angeles Aircraft Certification Office, 3960 Paramount Boulevard, Lakewood, California 90712–4137; telephone (562) 627–5245; fax (562) 627–5210.

SUPPLEMENTARY INFORMATION: A proposal to amend part 39 of the Federal Aviation Regulations (14 CFR part 39) to include an airworthiness directive (AD) that is applicable to certain McDonnell Douglas Model DC–9, DC–9–80, and C–9 (military) series airplanes, and Model MD–88 airplanes was published in the **Federal Register** on July 14, 1999 (64 FR 37911). That action proposed to require a one-time inspection to determine the type of engine ignition switch installed in the hinged forward overhead switch panel, and replacement of certain rotary ignition switches with new design rotary ignition switches.

Interested persons have been afforded an opportunity to participate in the making of this amendment. Due consideration has been given to the comments received.

Support for the Proposal

One commenter supports the proposed rule.

Request for Clarification of Certain Requirements

One commenter request that the FAA clarify the requirements of paragraph (a) of the proposed AD. The commenter states that paragraph (a) of the proposed AD requires the visual inspection be accomplished in accordance with McDonnell Douglas Service Bulletin DC9–74–001, dated May 23, 1997, or McDonnell Douglas Alert Service Bulletin DC9–74A001, Revision 01, dated October 26, 1998. The commenter notes that Service Bulletin DC9–74–001 addresses only the five position ignition switches, whereas Alert Service Bulletin DC9–74A001 addresses both the four and five position ignition switches. The commenter states that using Service Bulletin DC9–74–001 instead of Alert Service Bulletin DC9–74A001 could result in the suspect four position switches not being removed.

The FAA concurs with the commenter that clarification is necessary. Because only the alert service bulletin provides instructions to address both types of switches, it is the only service bulletin referenced in the final rule for that purpose. The FAA has added a new note to clarify that inspection of the five position switches prior to the effective date of the AD in accordance with McDonnell Douglas Service Bulletin DC9–74001, dated May 23, 1997, is considered acceptable for compliance with paragraph (a) of this AD.

Request To Include Additional Spares Affected

One commenter requests that the FAA clarify what spare parts are affected by paragraph (b) of the proposed AD. The commenter states that paragraphs (a)(2)(i) and (a)(2)(ii) require that both four position and five position ''old'' style rotary ignition switches be replaced in accordance with McDonnell Douglas Alert Service Bulletin DC9–74A001. However, the commenter points out that paragraph (b) of the proposed AD addresses only the four position ignition switches.

The FAA concurs with the commenter's request that clarification is necessary. The omission of the five position ignition switches was an error. The FAA has revised paragraph (b) of the final rule accordingly.

Conclusion

After careful review of the available data, including the comments noted above, the FAA has determined that air safety and the public interest require the adoption of the rule with the changes previously described. The FAA has determined that these changes will neither increase the economic burden on any operator nor increase the scope of the AD.

Cost Impact

There are approximately 2,000 airplanes of the affected design in the worldwide fleet. The FAA estimates that 1,000 airplanes of U.S. registry will be affected by this AD, that it will take approximately 1 work hour per airplane to accomplish the required inspection, and that the average labor rate is $60 per work hour. Based on these figures, the cost impact of the inspection required by this AD on U.S. operators is estimated to be $60,000, or $60 per airplane.

The cost impact figure discussed above is based on assumptions that no operator has yet accomplished any of the requirements of this AD action, and that no operator would accomplish those actions in the future if this AD were not adopted.

Regulatory Impact

The regulations adopted herein will not have substantial direct effects on the States, on the relationship between the national government and the States, or on the distribution of power and responsibilities among the various levels of government. Therefore, in accordance with Executive Order 12612, it is determined that this final rule does not have sufficient federalism implications to warrant the preparation of a Federalism Assessment.

For the reasons discussed above, I certify that this action (1) Is not a ''significant regulatory action'' under Executive Order 12866; (2) is not a ''significant rule'' under DOT Regulatory Policies and Procedures (44 FR 11034, February 26, 1979); and (3) will not have a significant economic impact, positive or negative, on a substantial number of small entities under the criteria of the Regulatory Flexibility Act. A final evaluation has been prepared for this action and it is contained in the Rules Docket. A copy of it may be obtained from the Rules Docket at the location provided under the caption **ADDRESSES**.

List of Subjects in 14 CFR Part 39

Air transportation, Aircraft, Aviation safety, Incorporation by reference, Safety.

Adoption of the Amendment

Accordingly, pursuant to the authority delegated to me by the Administrator, the Federal Aviation Administration amends part 39 of the Federal Aviation Regulations (14 CFR part 39) as follows:

PART 39—AIRWORTHINESS DIRECTIVES

1. The authority citation for part 39 continues to read as follows:

Authority: 49 U.S.C. 106(g), 40113, 44701.

§ 39.13 [Amended]

2. Section 39.13 is amended by adding the following new airworthiness directive:

2000–02–23 McDonnell Douglas: Amendment 39–11541. Docket 98–NM–381–AD.

Applicability: Model DC–9–10, –20, –30, –40, and –50 series airplanes; Model DC–9–81 (MD–81), DC–9–82 (MD–82), DC–9–83

(MD–83), and DC–9–87 (MD–87) series airplanes; Model MD–88 airplanes; and C–9 (military) series airplanes; as listed in McDonnell Douglas Alert Service Bulletin DC9–74A001, Revision 01, dated October 26, 1998; certificated in any category.

Note 1: This AD applies to each airplane identified in the preceding applicability provision, regardless of whether it has been modified, altered, or repaired in the area subject to the requirements of this AD. For airplanes that have been modified, altered, or repaired so that the performance of the requirements of this AD is affected, the owner/operator must request approval for an alternative method of compliance in accordance with paragraph (c) of this AD. The request should include an assessment of the effect of the modification, alteration, or repair on the unsafe condition addressed by this AD; and, if the unsafe condition has not been eliminated, the request should include specific proposed actions to address it.

Compliance: Required as indicated, unless accomplished previously.

To prevent an internal electrical short in the engine ignition switch, which could result in smoke in the flight compartment, accomplish the following:

Inspection and Corrective Action

(a) Within 8 months after the effective date of this AD, visually inspect the engine ignition switch to determine what type of switch (rotary or toggle) is installed in the hinged forward overhead switch panel, in accordance with McDonnell Douglas Service Bulletin DC9–74–001, dated May 23, 1997, or McDonnell Douglas Alert Service Bulletin DC9–74A001, Revision 01, dated October 26, 1998.

Note 2: Inspection of the five position ignition switches prior the effective date of the AD in accordance with McDonnell Douglas Service Bulletin DC9–74001, dated May 23, 1997, is considered acceptable for compliance with paragraph (a) of this AD.

(1) If the switch is a toggle type, no further action is required by this AD.

(2) If the switch is a rotary type, prior to further flight, determine the switch part number in accordance with the service bulletin.

(i) If the switch has part number 79–2318 (5D0423–2) or 79–2355, no further action is required by this AD.

(ii) If the switch has any part number other than that identified in paragraph (a)(2)(i) of this AD, prior to further flight, replace the engine ignition switch with a new design ignition switch in accordance with the service bulletin.

Spares Affected

(b) As of the effective date of this AD, no person shall install a four position rotary ignition type switch, part number (P/N) 79–2081, 69–1966, or 34064; or a five position rotary type ignition switch, P/N 79–2055 (5D0423–1), 69–1967, 53306–033, or 3600–3076; on any airplane.

Alternative Methods of Compliance

(c) An alternative method of compliance or adjustment of the compliance time that provides an acceptable level of safety may be used if approved by the Manager, Los Angeles Aircraft Certification Office (ACO), FAA, Transport Airplane Directorate. Operators shall submit their requests through an appropriate FAA Principal Maintenance Inspector, who may add comments and then send it to the Manager, Los Angeles ACO.

Note 3: Information concerning the existence of approved alternative methods of compliance with this AD, if any, may be obtained from the Los Angeles ACO.

Special Flight Permits

(d) Special flight permits may be issued in accordance with §§ 21.197 and 21.199 of the Federal Aviation Regulations (14 CFR 21.197 and 21.199) to operate the airplane to a location where the requirements of this AD can be accomplished.

Incorporation by Reference

(e) The actions shall be done in accordance with McDonnell Douglas Service Bulletin DC9–74–001, dated May 23, 1997; or McDonnell Douglas Alert Service Bulletin DC9–74A001, Revision 01, dated October 26, 1998. This incorporation by reference was approved by the Director of the Federal Register in accordance with 5 U.S.C. 552(a) and 1 CFR part 51. Copies may be obtained from Boeing Commercial Aircraft Group, Long Beach Division, 3855 Lakewood Boulevard, Long Beach, California 90846, Attention: Technical Publications Business Administration, Dept. C1–L51 (2–60). Copies may be inspected at the FAA, Transport Airplane Directorate, 1601 Lind Avenue, SW., Renton, Washington; or at the FAA, Transport Airplane Directorate, Los Angeles Aircraft Certification Office, 3960 Paramount Boulevard, Lakewood, California; or at the Office of the Federal Register, 800 North Capitol Street, NW., suite 700, Washington, DC.

(f) This amendment becomes effective on March 9, 2000.

Issued in Renton, Washington, on January 25, 2000.

Donald L. Riggin,

Acting Manager, Transport Airplane Directorate, Aircraft Certification Service.

[FR Doc. 00–2084 Filed 2–2–00; 8:45 am]

BILLING CODE 4910–13–U

DEPARTMENT OF TRANSPORTATION

Federal Aviation Administration

14 CFR Part 39

[Docket No. 99–NM–247–AD; Amendment 39–11542; AD 2000–02–24]

RIN 2120–AA64

Airworthiness Directives; Airbus Model A300, A310, and A300–600 Series Airplanes

AGENCY: Federal Aviation Administration, DOT.

ACTION: Final rule.

SUMMARY: This amendment adopts a new airworthiness directive (AD), applicable to certain Airbus Model A300, A310, and A300–600 series airplanes, that requires either replacement of the spring rod assemblies of the rudder servo controls with improved spring rod assemblies; or modification of the existing spring rod assemblies. For certain airplanes, this amendment requires a one-time visual inspection to determine whether certain parts of the spring rod assemblies of the rudder servo controls are installed; and corrective actions, if necessary. This amendment is prompted by issuance of mandatory continuing airworthiness information by a foreign civil airworthiness authority. The actions specified by this AD are intended to prevent corrosion of the spring rod assemblies of the rudder servo controls, which could result in the jamming of the rudder servo controls and consequent reduced controllability of the airplane.

DATES: Effective March 9, 2000.

The incorporation by reference of certain publications listed in the regulations is approved by the Director of the Federal Register as of March 9, 2000.

ADDRESSES: The service information referenced in this AD may be obtained from Airbus Industrie, 1 Rond Point Maurice Bellonte, 31707 Blagnac Cedex, France. This information may be examined at the Federal Aviation Administration (FAA), Transport Airplane Directorate, Rules Docket, 1601 Lind Avenue, SW., Renton, Washington; or at the Office of the Federal Register, 800 North Capitol Street, NW., suite 700, Washington, DC.

FOR FURTHER INFORMATION CONTACT: Norman B. Martenson, Manager, International Branch, ANM–116, FAA, Transport Airplane Directorate, 1601 Lind Avenue, SW., Renton, Washington 98055–4056; telephone (425) 227–2110; fax (425) 227–1149.

SUPPLEMENTARY INFORMATION: A proposal to amend part 39 of the Federal Aviation Regulations (14 CFR part 39) to include an airworthiness directive (AD) that is applicable to certain Airbus Model A300, A310, and A300–600 series airplanes was published in the **Federal Register** on November 4, 1999 (64 FR 60138). That action proposed to require either replacement of the spring rod assemblies of the rudder servo controls with improved spring rod assemblies; or modification of the existing spring rod assemblies. For certain airplanes, that action proposed to require a one-time visual inspection to determine whether certain parts of

the spring rod assemblies of the rudder servo controls are installed; and corrective actions, if necessary.

Interested persons have been afforded an opportunity to participate in the making of this amendment. No comments were submitted in response to the proposal or the FAA's determination of the cost to the public.

French Airworthiness Directive Revision

Since issuance of the proposed AD, the Direction Gonorale de l'Aviation Civile (DGAC), which is the airworthiness authority for France, has revised the corresponding French airworthiness directive. The DGAC issued 1999–240–288(B) R1, dated December 15, 1999, to provide operators with an exhaustive list of appropriate part numbers (P/N) for rudder servo control input spring rod assemblies. The FAA has reviewed this information and has determined that paragraphs (b)(1) and (b)(2) of the proposed AD should be revised to include an additional part number. These paragraphs specify acceptable spring rod assemblies as those having either P/N A2727086500400 or A2727086500600. However, P/N A2727114900000 also is acceptable for installation. Paragraphs (b)(1) and (b)(2) of the AD have been revised to include this P/N.

Conclusion

After careful review of the available data, the FAA has determined that air safety and the public interest require the adoption of the rule with the change described previously. The FAA has determined that this change will neither increase the economic burden on any operator nor increase the scope of the AD.

Cost Impact

The FAA estimates that 156 airplanes of U.S. registry will be affected by this AD.

If an operator elects to replace the spring rod assemblies: It will take approximately 4 work hours per airplane to accomplish the replacement, at an average labor rate of $60 per work hour. Required parts will cost approximately $3,720 per airplane. Based on these figures, the cost impact of the replacement on U.S. operators is estimated to be $3,960 per airplane.

If an operator elects to modify the spring rod assemblies: It will take approximately 7 work hours per airplane to accomplish the modification, at an average labor rate of $60 per work hour. Required parts will cost approximately $294 per airplane. Based on these figures, the cost impact of the modification on U.S. operators is estimated to be $714 per airplane.

If an operator is required to accomplish the one-time inspection: It will take approximately 1 work hour per airplane to accomplish that inspection, at an average labor rate of $60 per work hour. Based on these figures, the cost impact of the inspection on U.S. operators is estimated to be $60 per airplane.

The cost impact figures discussed above are based on assumptions that no operator has yet accomplished any of the requirements of this AD action, and that no operator would accomplish those actions in the future if this AD were not adopted.

Regulatory Impact

The regulations adopted herein will not have a substantial direct effect on the States, on the relationship between the national Government and the States, or on the distribution of power and responsibilities among the various levels of government. Therefore, it is determined that this final rule does not have federalism implications under Executive Order 13132.

For the reasons discussed above, I certify that this action (1) Is not a ''significant regulatory action'' under Executive Order 12866; (2) Is not a ''significant rule'' under DOT Regulatory Policies and Procedures (44 FR 11034, February 26, 1979); and (3) Will not have a significant economic impact, positive or negative, on a substantial number of small entities under the criteria of the Regulatory Flexibility Act. A final evaluation has been prepared for this action and it is contained in the Rules Docket. A copy of it may be obtained from the Rules Docket at the location provided under the caption **ADDRESSES**.

List of Subjects in 14 CFR Part 39

Air transportation, Aircraft, Aviation safety, Incorporation by reference, Safety.

Adoption of the Amendment

Accordingly, pursuant to the authority delegated to me by the Administrator, the Federal Aviation Administration amends part 39 of the Federal Aviation Regulations (14 CFR part 39) as follows:

PART 39—AIRWORTHINESS DIRECTIVES

1. The authority citation for part 39 continues to read as follows:

Authority: 49 U.S.C. 106(g), 40113, 44701.

§ 39.13 [Amended]

2. Section 39.13 is amended by adding the following new airworthiness directive:

2000–02–24 Airbus Industrie: Amendment 39–11542. Docket 99–NM–247–AD.

Applicability: Model A300, A310, and A300–600 series airplanes; certificated in any category; except those airplanes on which Airbus Modification 10438 has been installed, or on which Airbus Service Bulletin A300–27–0182, Revision 2, A300–27–6023, Revision 2, or A300–27–2065, Revision 2, each dated June 30, 1999, has been accomplished.

Note 1: This AD applies to each airplane identified in the preceding applicability provision, regardless of whether it has been otherwise modified, altered, or repaired in the area subject to the requirements of this AD. For airplanes that have been modified, altered, or repaired so that the performance of the requirements of this AD is affected, the owner/operator must request approval for an alternative method of compliance in accordance with paragraph (d) of this AD. The request should include an assessment of the effect of the modification, alteration, or repair on the unsafe condition addressed by this AD; and, if the unsafe condition has not been eliminated, the request should include specific proposed actions to address it.

Compliance: Required as indicated, unless accomplished previously.

To prevent corrosion of the spring rod assemblies of the rudder servo controls, which could result in the jamming of the rudder servo controls and consequent reduced controllability of the airplane, accomplish the following:

(a) For airplanes on which the spring rod assemblies of the rudder servo controls have not been modified in accordance with Airbus Service Bulletin A300–27–182, dated March 16, 1995, or Revision 1, dated November 21, 1996 (for Model A300 series airplanes); A310–27–2065, dated March 16, 1995, or Revision 1, dated March 10, 1997 (for Model A310 series airplanes); or A300–27–6023, dated March 16, 1995, or Revision 1, dated March 10, 1997 (for Model A300–600 series airplanes); as applicable; as of the effective date of this AD: Within 1 year after the effective date of this AD, accomplish the actions specified in either paragraph (a)(1) or (a)(2) in accordance with Airbus Service Bulletin A300–27–182, Revision 2 (for Model A300 series airplanes); or A310–27–2065, Revision 2 (for Model A310 series airplanes); or A300–27–6023, Revision 2 (for Model A300–600 series airplanes); each dated June 30, 1999; as applicable.

(1) Replace the spring rod assemblies with improved spring rod assemblies; or

(2) Modify the existing spring rod assemblies and re-identify all modified spring rod assemblies.

(b) For airplanes on which the spring rod assemblies of the rudder servo controls have been modified in accordance with Airbus Service Bulletin A300–27–182, dated March 16, 1995, or Revision 1, dated November 21, 1996 (for Model A300 series airplanes); or A310–27–2065, dated March 16, 1995, or Revision 1, dated March 10, 1997 (for Model A310 series airplanes); or A300–27–6023, dated March 16, 1995, or Revision 1, dated March 10, 1997 (for Model A300–600 series airplanes); as applicable; as of the effective date of this AD: Within 1 year after the effective date of this AD, perform a one-time visual inspection to verify that all spring rod assemblies of the rudder servo controls have the same part numbers, in accordance with Airbus Service Bulletin A300–27–182, Revision 2 (for Model A300 series airplanes); or A310–27–2065, Revision 2 (for Model A310 series airplanes); or A300–27–6023, Revision 2 (for Model A300–600 series airplanes); each dated June 30, 1999; as applicable.

(1) If all three spring rod assemblies have P/N A2727086500400, A2727086500600, or A2727114900000, no further action is required by this AD.

(2) If any spring rod assembly has a P/N other than P/N A2727086500400, A2727086500600, or A2727114900000, prior to further flight, re-identify all spring rod assemblies to the P/N specified in the applicable service bulletin, in accordance with the applicable service bulletin.

(c) As of the effective date of this AD, no person shall install on any airplane a spring rod assembly having P/N A2727086500200.

Alternative Methods of Compliance

(d) An alternative method of compliance or adjustment of the compliance time that provides an acceptable level of safety may be used if approved by the Manager, International Branch, ANM–116, FAA, Transport Airplane Directorate. Operators shall submit their requests through an appropriate FAA Principal Maintenance Inspector, who may add comments and then send it to the Manager, International Branch, ANM–116.

Note 2: Information concerning the existence of approved alternative methods of compliance with this AD, if any, may be obtained from the International Branch, ANM–116.

Special Flight Permits

(e) Special flight permits may be issued in accordance with § 21.197 and 21.199 of the Federal Aviation Regulations (14 CFR 21.197 and 21.199) to operate the airplane to a location where the requirements of this AD can be accomplished.

Incorporation by Reference

(f) The actions shall be done in accordance with Airbus Service Bulletin A300–27–182, Revision 2, dated June 30, 1999; Airbus Service Bulletin A310–27–2065, Revision 2, dated June 30, 1999; or Airbus Service Bulletin A300–27–6023, Revision 2, dated June 30, 1999; as applicable. Airbus Service Bulletin A300–27–6023, Revision 2, dated June 30, 1999, contains the following list of effective pages:

Revision level page No.	Date shown on page	Shown on page
1–6, 8–12, 17	2	June 30, 1999.
7, 13–16	Original	March 16, 1995.

This incorporation by reference was approved by the Director of the Federal Register in accordance with 5 U.S.C. 552(a) and 1 CFR part 51. Copies may be obtained from Airbus Industrie, 1 Rond Point Maurice Bellonte, 31707 Blagnac Cedex, France. Copies may be inspected at the FAA, Transport Airplane Directorate, 1601 Lind Avenue, SW., Renton, Washington; or at the Office of the Federal Register, 800 North Capitol Street, NW., suite 700, Washington, DC.

Note 3: The subject of this AD is addressed in French airworthiness directives 1999–240–288(B), dated June 30, 1999, and 1999–240–288(B) R1, dated December 15, 1999.

(g) This amendment becomes effective on March 9, 2000.

Issued in Renton, Washington, on January 25, 2000.

Donald L. Riggin,

Acting Manager, Transport Airplane Directorate, Aircraft Certification Service.

[FR Doc. 00–2083 Filed 2–2–00; 8:45 am]

BILLING CODE 4910–13–U

ENVIRONMENTAL PROTECTION AGENCY

40 CFR Part 52

[MD082–3048a; FRL–6531–1]

Approval and Promulgation of Air Quality Implementation Plans; Maryland; 15 Percent Rate of Progress Plan for the Baltimore Ozone Nonattainment Area

AGENCY: Environmental Protection Agency (EPA).

ACTION: Direct final rule.

SUMMARY: EPA is taking direct final action to convert its conditional approval of a revision to the Maryland State Implementation Plan (SIP) to a full approval. The revision consists of the 15 percent rate of progress requirements for the Baltimore severe ozone nonattainment area. EPA is also taking direct final action to approve revisions to certain portions of the 1990 base year emissions inventory of volatile organic compound (VOC) and nitrogen oxide (NO_x) emissions for the Baltimore nonattainment area. EPA is approving these revisions in accordance with the requirements of the Clean Air Act.

DATES: This rule is effective on March 20, 2000 without further notice, unless EPA receives adverse written comment by March 6, 2000. If EPA receives such comments, it will publish a timely withdrawal of the direct final rule in the **Federal Register** and inform the public that the rule will not take effect.

ADDRESSES: Written comments should be mailed to David L. Arnold, Chief, Ozone and Mobile Sources Branch, Mailcode 3AP21, U.S. Environmental Protection Agency, Region III, 1650 Arch Street, Philadelphia, Pennsylvania 19103. Copies of the documents relevant to this action are available for public inspection during normal business hours at the Air Protection Division, U.S. Environmental Protection Agency, Region III, 1650 Arch Street, Philadelphia, Pennsylvania 19103; and Maryland Department of the Environment, 2500 Broening Highway, Baltimore, Maryland, 21224.

FOR FURTHER INFORMATION CONTACT: Kristeen Gaffney, (215) 814–2092, or by e-mail at gaffney.kristeen@epa.gov.

SUPPLEMENTARY INFORMATION:

I. Background

Section 182(b) of Clean Air Act (the Act) requires states with ozone

nonattainment areas classified as moderate or higher to submit a plan demonstrating a 15 percent reduction in VOC emissions from 1990 baseline emission levels. These reductions were to be achieved by November 15, 1996. This requirement of the Act demonstrating ''rate of progress'' (or ROP) toward attainment is known commonly as the ''15% Plan.''

The Baltimore ozone nonattainment area consists of the City of Baltimore plus the counties of Anne Arundel, Baltimore, Carroll, Harford, and Howard, and is classified as severe. On July 12, 1995, Maryland submitted a 15% Plan SIP revision for the Baltimore nonattainment area. On October 9, 1997 (62 FR 52661), EPA conditionally approved the Maryland's July 12, 1995 SIP revision of the 15% Plan for the Baltimore nonattainment area because, while on its face, the 15% Plan achieved the required 15% VOC emission reduction to satisfy the requirements of the Act, the plan itself did not provide sufficient documentation on the measures included in the plan for EPA to take action on at that time. Instead, EPA granted conditional approval of the July 12, 1995 15% Plan and ruled that the State must supplement its submittal to demonstrate that it achieved the required emission reductions. EPA's October 9, 1997 rule established the following four conditions for full approval of the Baltimore 15% Plan:

1. Maryland's 15% Plan calculations must reflect the EPA approved 1990 base year emissions inventory (found at 61 FR 50715, September 27, 1996).

2. Maryland must meet the conditions listed in the October 31, 1996 conditional I/M rulemaking notice, including its commitment to remodel the vehicle inspection and maintenance (I/M) reductions using the following two EPA guidance memos: ''Date by which States Need to Achieve all the Reductions Needed for the 15 Percent Plan from I/M and Guidance for Recalculation,'' memorandum from John Seitz and Margo Oge dated August 13, 1996, and ''Modeling 15% VOC Reductions from I/M in 1999—Supplemental Guidance,'' memorandum from Gay MacGregor and Sally Shaver dated December 23, 1996.

3. Maryland must remodel to determine affirmatively the creditable reductions from reformulated gasoline (RFG) and federal Tier I vehicle emission standards in accordance with EPA guidance.

4. Maryland must submit a SIP revision amending the 15% Plan with a determination using appropriate documentation methodologies and credit calculations that the 64.2 tons per day (TPD) reduction, supported through creditable emission measures in the submittal, satisfies Maryland's 15% ROP requirement for the Baltimore area.

In a September 4, 1997 letter to EPA, the State committed to meet all the conditions listed in EPA's rulemaking within 12 months of final conditional approval. The State of Maryland submitted a revised 15% Plan for the Baltimore area addressing the conditions on October 7, 1998. Additionally, today's action will approve minor revisions to the SIP approved 1990 base year emissions inventory for NO_X and VOC emissions that is used as a basis for demonstrating rate of progress.

II. Summary of the SIP Revision

Maryland's October 7, 1998 submittal of the revised 15% Plan contains the following:

- Emissions projections or projected growth in emissions during the period 1990–1996.
- VOC emissions target level calculation for 1996.
- Description of control measures used to demonstrate the 15 required VOC reduction.
- Revisions to the 1990 base year inventory for VOC and NO_X emissions. The inventory was revised in part, in response to EPA's first condition of the October 9, 1997 conditional rulemaking.

III. Base Year Inventory Revisions

The 1990 base year inventory is an inventory of actual VOC, NO_X, and carbon monoxide emissions that occurred in Maryland in 1990. This inventory is the basis for calculating future years emissions growth and the required 15% emissions reduction to demonstrate rate of progress. EPA SIP approved Maryland's state-wide 1990 base year inventory on September 27, 1996 (61 FR 50715).

The October 7, 1998 submittal of the revised 15% Plan for the Baltimore nonattainment area references revisions to the 1990 base year inventory submitted as a separate SIP revision to EPA on December 24, 1997. The December 24, 1997 SIP revision contained the Post-1996 Rate of Progress Plan for the Baltimore nonattainment area. As part of the Post-1996 ROP Plan SIP revision, Maryland revised the 1990 base year inventory for both VOC and NO_X emissions in the Baltimore nonattainment area. EPA has not yet taken rulemaking action on Maryland's December 24, 1997 Post-1996 ROP Plan submittal. However, because the inventory revisions submitted as part of Post-1996 ROP SIP are also the basis of calculation for the revised 15% Plan target level, EPA will be taking action in today's rulemaking on that portion of the December 24, 1997 SIP revision as it relates solely to the 1990 base year inventory revisions for NO_X and VOCs in the Baltimore nonattainment area.

Maryland made several modifications to the earlier emission estimates for VOCs and NOx for point, area and mobile sources. These changes are due to improvements in inventory estimation techniques, the availability of more accurate data, revised estimates of population and employment and other technical improvements. There are no changes to the biogenic VOC emissions portion of the inventory being requested at this time. EPA is approving the requested revisions to the 1990 base year inventories for the Baltimore ozone nonattainment area that were submitted as part of Maryland's December 24, 1997 SIP submittal. Table 1 illustrates the base year inventory revisions that will be approved into the Maryland SIP.

TABLE 1.—REVISED 1990 BASE YEAR INVENTORY FOR THE BALTIMORE NONATTAINMENT AREA

[Tons per day]

	VOC previously approved	VOC revised	Change	NO_X previously approved	NO_X revised	Change
Mobile sources	131.5	134.2	(+2.7)	161.2	159.5	(−1.7)
Point sources	40.3	42.0	(+1.7)	231.3	223.2	(−8.1)
Nonroad sources	45.2	44.7	(−.5)	71.58	71.5	(−.1)
Area sources	127.1	122.4	(−4.7)	10.6	13.7	(+3.1)
Biogenic sources	180.1	180.09	0	NA	NA	NA

TABLE 1.—REVISED 1990 BASE YEAR INVENTORY FOR THE BALTIMORE NONATTAINMENT AREA—Continued

[Tons per day]

	VOC previously approved	VOC revised	Change	NO_X previously approved	NO_X revised	Change
Total	524.2	523.4	(−.8)	474.7	467.9	(−6.8)

IV. Calculation of the 15% Reduction Target

Section 182(b) of the Act requires that the SIP achieve a reduction of 15% of the 1990 baseline VOC emissions accounting for any growth in emissions (i.e, growth occurring between 1990 and 1996). EPA issued guidance to the states to assist them in calculating emission reductions necessary for demonstrating ROP. To determine the amount of emissions reductions necessary to demonstrate the 15% ROP requirement, states must first calculate a target level of emissions for 1996. The 1996 target level facilitates planning for the 15% VOC reduction. Maryland has based the calculation of the 1996 target level of emissions on the revised 1990 base year inventory established in Table 1 above. The 15% emissions reduction target level for the Baltimore nonattainment area is calculated in Table 2 below. EPA believes that the VOC 1996 target level of 253.3 tons per day (TPD) for Baltimore has been properly calculated according to EPA guidance and is approveable.

TABLE 2.—CALCULATION OF 15% REDUCTION TARGET LEVEL FOR THE BALTIMORE NONATTAINMENT AREA

[Tons per day]

1990 Base Year Inventory	523.4
ROP Inventory (adjusted to remove biogenic emissions 180.1 TPD)	343.3
Non-Creditable Reductions from FMVCP and RVP	(39.7)
RACT ''fix-ups'' and I/M Corrections	0.0
1990 Adjusted Base Year Inventory (ROP base year—FMVCP/RVP)	303.6
15% Reduction Requirement (0.15 × adjusted base year inventory)	(45.5)
Emission reductions from FMVCP and RVP from 1996–1999 (delayed enhanced I/M program adjustment)	(4.8)
1996 Target Level of Emissions (Adjusted base year inventory—15% reduction—FMVCP/RVP 1996–1999)	253.3
Expected Emissions Growth 1990–1996	18.4
Total Emissions Reduction Needed (15% reduction + growth + non-creditable emissions from delayed I/M)	68.7

V. Growth Projections (1990–1996)

To meet the ROP requirements, reductions must occur to both achieve a 15% reduction in 1990 emission levels plus offset growth in emissions between 1990–1996. These estimates are made by projecting the 1990 base year VOC inventory out to 1996 considering only the current control strategy. The projected inventories must reflect expected growth in activity, as well as regulatory actions which will affect emission levels. EPA recommends that emission projections for point sources be based on information obtained directly from facilities and/or permit applications. Area and mobile source emission projections may be developed from information from local planning agencies. In the absence of source-specific data, credible growth factors must be developed from accurate forecasts of economic variables and the activities associated with the variables. Economic variables that may be used as indicators of activity growth are: product output, value added, earnings, and employment. Population can also serve as a surrogate indicator. According to EPA guidance, economic data and models which provide acceptable growth factors for emission projections include the U.S. Department of Commerce Bureau of Economic Analysis forecasts for states and metropolitan statistical areas; the Economic Growth Analysis System, which models economic growth and estimates corresponding increases in emissions-producing activity; and the Emissions Preprocessor System for urban airshed modeling, which produces spatially and temporally resolved emission inventories for input into urban airshed models.

Maryland's revised 15% Plan submittal for the Baltimore nonattainment area discusses how Maryland projected growth from 1990 to 1996 for each emissions category. The growth projections are based on the revised 1990 base year inventory discussed earlier in this document. The State's methodology for selecting growth factors and applying them to the 1990 base year emissions inventory to estimate growth in emissions from 1990 to 1996 is acceptable for all source categories. Maryland predicts VOC emissions will grow by 18.4 TPD from 1990 to 1996. Maryland's total VOC emissions growth projections are shown in Table 3 below.

TABLE 3.—1996 PROJECTION YEAR VOC INVENTORY BY CATEGORY, BALTIMORE NONATTAINMENT AREA

Inventory component	1990 baseline (TPD)	1996 projection (TPD)
Point Source	42.0	44.6
Area Source	122.4	126.6
Mobile Source	134.2	142.0
Non-road Source	44.7	48.5
Total	343.3	361.7

VI. Evaluation of the State's 15% Plan Control Measures

The 15% Plan for the Baltimore area claims creditable reductions of 85.6 TPD from identified emission control programs. To be creditable, each control measure must meet the creditability requirements of EPA policy and of the Act. A measure is creditable if it is real, quantifiable, permanent, and enforceable. To be enforceable a reduction must meet any one of the following:

1. It must result from a rule in the approved State SIP, or

2. It must result from a rule promulgated by EPA, or

3. It must result from a reduction enforceable under a permit issued pursuant to Title V of the Act.

Emission reductions from rules adopted and implemented before 1990 are not creditable because the base year inventory reflects the effects of these rules. Below is a brief description of each of the control measures in the Baltimore 15% Plan.

A. Stationary Source Controls

1. Federal Air Toxics

This measure addresses sources required to comply with federal air toxics requirements that have or will achieve VOC reductions between 1990 and 1996. Two sources in the Baltimore nonattainment area were required to comply with a federal maximum available control technology (MACT) standard or national emissions standard for hazardous air pollutants (NESHAP) between 1990 and 1996. Maryland claimed 0.4 TPD from this control measure. Credit is allowable from MACTs and NESHAPs; thus, 0.4 TPD from federal air toxics is fully creditable toward the Baltimore 15% Plan.

2. Architectural and Industrial Maintenance Coatings

Under section 183(e) of the Act, EPA was required to study emissions from architectural and industrial maintenance (AIM) coatings operations, group them by order of significance, and establish a schedule to regulate the largest contributors. On September 11, 1998, EPA promulgated a national rule (63 FR 48848) for reducing VOC emissions from architectural coatings. Architectural coatings are commonly applied by consumers and contractors, and include exterior and interior paints, industrial maintenance coatings, wood and roof coatings, primers, and traffic paints. EPA's rule establishes a VOC content limit for 61 categories of architectural coatings. The requirements are based on product reformulation, a pollution prevention method. Manufacturers and importers were required to comply with rule by September 1999. EPA's final regulation is expected to reduce emissions of VOCs by 20%.

EPA has issued several memoranda allowing states to take credit in their 15% Plans from the AIM coatings rule, and also the federal Autobody Refinishing and Consumer/Commercial products rules. The promulgation dates and hence the compliance dates for these rules did not occur by the November 15, 1996 implementation date for the 15% Plan. It is EPA's intention to still allow credit from the federal rules in states 15% Plans for the reasons discussed below.

Disapproval of the 15% Plan because these federal measures were delayed and did not achieve the required reductions by November 15, 1996 would require the SIP to be revised to make up the shortfall. EPA would propose approval of such a remedial measure if the SIP would achieve the 15% level as soon after November 15, 1996 as practicable. EPA believes that Maryland had limited ability to effectuate the reductions from these (or any other measures achieving equivalent reductions) any more expeditiously than EPA was able to promulgate the federal rules.

In the policy memo, ''Credit for the 15% Rate-of-Progress Plans for Reductions from the Architectural and Industrial Maintenance (AIM) Coating Rule,'' dated March 22, 1995, EPA provided guidance on the expected reductions from the national rule—allowing up to a 20% reduction from the 1990 baseline levels. The March 22, 1995 policy memo was subsequently updated on March 7, 1996 (''Update on the Credit for the 15% Rate-of-Progress Plans for Reductions from the Architectural and Industrial Maintenance (AIM) Coating Rule'') to state that states may still take a 20% emission reduction credit from the AIM coatings rule in their 15% Plans even though the rulemaking has been delayed beyond the November 15, 1996 implementation date specified in the Act for 15% Plan measures. In light of the significant delays EPA experienced in promulgating the AIM rule, EPA has continued to allow the AIM emission reduction credits to count in state 15% Plans. EPA believes that although the compliance date was pushed back to September 1999, the emission reductions from the national AIM rule are still creditable in state 15% Plans. For the purposes of the 15% ROP plan calculations then, EPA will allow Maryland to take credit for any of the federal measures even though the emission reductions from these measures did not occur until after November 15, 1996.

Following both EPA's published guidance and in concurrence with the final AIM rule, Maryland assumed a 20% reduction in VOCs from the AIM rule or a 5.4 TPD reduction. EPA has determined that the 5.4 TPD emission reduction from AIM coatings is creditable toward the 15% ROP Plan requirement for the Baltimore nonattainment area.

3. Consumer and Commercial Products National Rule

Section 183(e) of the Act also required EPA to conduct a study of VOC emissions from consumer and commercial products and to compile a regulatory priority list. EPA is then required to regulate those categories that account for 80% of the consumer product emissions in ozone nonattainment areas. Group I of EPA's regulatory schedule lists 24 categories of consumer products to be regulated by national rule, including personal, household, and automotive products.

On September 11, 1998, EPA issued a final rule (63 FR 48819) to reduce the VOC content of 24 categories of household consumer products by 20% from levels emitted in 1990. Manufacturers must meet the VOC content limits by December 11, 1998 for all products, except pesticides regulated under the Federal Insecticide, Fungicide and Rodenticide Act, which have one year to comply with applicable VOC content limits. EPA policy allows states to claim up to a 20% reduction of total consumer product emissions towards the ROP requirement.

For reasons discussed previously under ''Architectural and Industrial Maintenance (AIM) Coatings,'' EPA will allow the states to take credit for this measure even though emission reductions from this measure did not occur until after November 15, 1996. Maryland claimed a 20% reduction or the equivalent reduction of 2.6 TPD from their 1996 projected uncontrolled consumer and commercial products emissions in the Baltimore nonattainment area. EPA believes this measure is creditable in Maryland's 15% Plan for the Baltimore nonattainment area.

4. Autobody Refinishing

Maryland has adopted an autobody refinishing regulation, COMAR 26.11.19.23, ''Control of VOC Emissions from Vehicle Refinishing.'' VOC emissions emanate from the evaporation of solvents used in the coating, drying and clean-up process. Maryland's autobody refinishing regulation was approved into the SIP on August 4, 1997 (62 FR 41853). This state rule assumes a 45% reduction (5.3 TPD) from 1996 projected uncontrolled autobody emissions in the Baltimore area. These reductions are creditable toward the ROP requirement.

5. Lithographic Printing

This measure regulates emissions from formerly uncontrolled small lithographic printing operations, such as

heatset web, non-heatset web, non-heatset sheet-fed, and newspaper non-heatset web operations. VOCs are emitted from the inks, fountain solutions and solvents used to clean the printing presses. Maryland's rule to control VOC emissions from lithographic printing operations (COMAR 26.11.19.11) was approved into the SIP on September 2, 1997 (62 FR 46199). VOC emissions are controlled from lithographic printers by limiting the allowable amount of isopropyl alcohol in the fountain solution. The 0.5 TPD VOC emission reductions achieved through this measure are creditable.

6. Surface Cleaning and Degreasing

This measure controls VOC emissions from surface cleaning/degreasing operations that fall into the area source category. Maryland amended existing regulations for surface cleaning devices and operations to require more stringent emission control requirements and enlarge the field of applicable sources. Maryland's more stringent surface cleaning and degreasing regulation (COMAR 26.11.19.09) was approved into the SIP on August 4, 1997 (62 FR 41853). Surface cleaning/degreasing operations impacted include, gasoline stations, autobody paint shops and machine shops that fall into the area source category. VOC emissions are controlled by requiring the reformulation of cold degreasers to either aqueous solutions or low VOC formulations. Maryland estimates that this rule reduces VOC emissions by 70%. Maryland claims 7.3 TPD reduction in the 15% Plan for the Baltimore nonattainment area from surface cleaning and degreasing controls. These reductions are creditable toward the 15% ROP requirement.

7. Landfill Emission Controls

According to Maryland's revised 15% Plan for the Baltimore area, this control measure relies on a federal rule to regulate emissions from municipal landfills. The 15% Plan states that ''the Department expects to promulgate a regulation requiring the use of a collection and control system or energy recovery system that would control VOC emissions at landfills by 98%.'' However, neither a state rule nor a federal rule was promulgated to control landfill emissions by November 15, 1996. Guidelines for the approvability of reductions credible for rate-of-progress plans dictate that the emission reductions be federally enforceable. Because there was no federal program nor any federally-approved state program to require controls on municipal landfills prior to November 15, 1996, the emission reductions claimed through this measure are not creditable toward the 15% ROP Plan. The 0.2 TPD VOC emission reductions claimed for the Baltimore nonattainment area in the revised 15% Plan are not approvable for the purposes of satisfying the 15% Plan requirements.

8. Enhanced Rule Compliance

This measure increases the effectiveness of existing regulations by enhancing rule compliance through increased or enhanced inspections and other enforcement activities. Maryland has targeted rule effectiveness (RE) improvement at tank truck unloading operations at gasoline dispensing facilities and at specified bulk terminals. Specific measures that Maryland used to enhance rule effectiveness at the targeted sources include increased administrative and civil penalties; enhanced monitoring; quarterly reporting requirements for sources; workshops; increased inspector training; increased source inspections and mandatory follow-up of violations. Maryland estimates that these enhancements improve rule effectiveness at the affected source categories to 92%, or 12% above EPA's default RE value of 80%. The increase in rule effectiveness results in an additional emission reduction benefit of 4.5 TPD in the Baltimore area. This program is enforceable under the State's Title V permit program. These reductions are creditable toward ROP in Baltimore.

9. State Air Toxics

This measure addresses facilities that are regulated under Maryland's air toxics program that have achieved VOC reductions above and beyond current federally enforceable limits. In general, Maryland's air toxics regulations cover any source required to obtain a permit to construct or an annually renewed state permit to operate. Maryland claimed 0.9 TPD from state air toxics. This measure is creditable and enforceable under the State's Title V permit program.

10. RACT Controls

According to the Act, states are required to adopt reasonably available control technology (RACT) for specific source categories covered by a control technique guideline that has been published by EPA or listed in the Act, and for all other major sources. RACT consists of a variety of control techniques that are generally available and cost effective. Maryland is claiming a total of 1.7 TPD from RACT controls implemented post-1990 on four source categories: expandable polystyrene operations, yeast production, bakeries, and screen printing operations. Maryland's RACT regulations for each of these categories have been approved into the SIP. EPA has determined the 1.7 TPD are creditable emission reductions in the 15% Plan for the Baltimore area.

11. Seasonal Open Burning Ban

Maryland has amended COMAR 26.11.07 to institute a ban on open burning during the peak ozone season in Maryland's severe and serious ozone nonattainment areas. Maryland considers the months of June, July, and August the peak ozone season, because that is when ambient levels of ozone in Maryland are usually the highest. During the peak ozone season, the practice of burning for the disposal of brush and yard waste as a method of land clearing will be banned reducing VOC emissions. During the remainder of the year (September 1—May 31), Maryland's existing open fire regulations apply. This ban was adopted on May 1, 1995, and effective on May 22, 1995. EPA approved the ban on open burning into the Maryland SIP on January 31, 1997. The State of Maryland estimates a 3.6 TPD reduction in VOCs emissions from the ban on open burning. These reductions are creditable in the 15% Plan.

B. Mobile Source Controls

Maryland used EPA's emissions model MOBILE5b to determine the amount of VOC emission reductions that will occur by 1996 from all mobile source control measures contained in the emissions model. These measures, each discussed briefly below, include Stage II vapor recovery systems, reformulated gasoline, the enhanced I/M program and federal Tier 1 emission standards. MOBILE5b generates a lump sum emission reduction total for all emission control programs. In the Baltimore nonattainment area, the combined VOC emission reduction in 1996 from all mobile source controls is 53.2 TPD. Maryland has adopted and implemented all the mobile source controls discussed below and where necessary, EPA has approved Maryland's regulations into the SIP. EPA has determined that Maryland has correctly estimated the emission reductions generated through mobile source control programs by using the MOBILE5b emissions model. The 53.2 TPD VOC reduction is creditable toward the 15% requirement.

1. Stage II Vapor Recovery

Section 182(b)(3) of the Act requires all owners and operators of gasoline dispensing systems in moderate and above ozone nonattainment areas to install and operate a system for gasoline vapor recovery (known as Stage II) of emissions from the fueling of motor vehicles. Stage II vapor recovery is a control measure which substantially reduces VOC emissions during the refueling of motor vehicles at gasoline service stations. The Stage II vapor recovery nozzles at gasoline pumps capture the gasoline-rich vapors displaced by liquid fuel during the refueling process. Maryland's Stage II regulation was approved into the SIP on June 9, 1994.

2. Reformulated Gasoline

Section 211(k) of the Act requires that only reformulated gasoline (RFG) be sold or dispensed in severe and above ozone nonattainment areas after January 1, 1995. Thus, RFG is required in the Baltimore severe ozone nonattainment area. This gasoline is reformulated to burn cleaner and produce fewer evaporative emissions. EPA enforces this program so the emission reductions are fully creditable. The benefits of RFG are also realized in off-road gasoline engines, such as lawn maintenance equipment and motor boats.

3. Enhanced Vehicle Inspection and Maintenance

Under section 182(c) of the Act, the Baltimore nonattainment area was required to adopt an enhanced vehicle inspection and maintenance program. Enhanced I/M programs reduce the emissions created by vehicles through periodic testing and, if needed, repair, of the vehicle's tailpipe emissions and evaporative systems.

Most of the 15% Plan SIPs originally submitted to the EPA contained enhanced I/M programs because this program achieves more VOC emission reductions than most, if not all other, control strategies. However, because most states experienced substantial difficulties implementing the enhanced I/M program using their original enhanced I/M protocols, most states did not begin actually testing cars until after the Clean Air Act implementation date.

In September 1995, EPA finalized revisions to its enhanced I/M rule allowing states significant flexibility in designing I/M programs appropriate for their needs (60 FR 48029). Subsequently, Congress enacted the National Highway Systems Designation Act of 1995 (NHSDA), which provided states with additional flexibility in determining the design of enhanced I/M programs. The substantial amount of time needed by states to re-design enhanced I/M programs in accordance with the NHSDA, to secure state legislative approval where necessary, and set up the infrastructure to perform the testing program precluded states that revised their enhanced I/M programs from obtaining emission reductions by November 15, 1996.

Given that many states, including Maryland, rely heavily upon enhanced I/M programs to help achieve the 15% VOC emissions reduction, and that the NHSDA and regulatory changes regarding enhanced I/M programs delayed their implementation, EPA believes that it was not possible for many states to achieve the portion of the 15% reductions that are attributed to I/M by November 15, 1996. Under these circumstances, disapproval of the 15% SIPs would serve no purpose. Consequently, under certain circumstances, EPA proposed to allow states that pursue re-design of enhanced I/M programs to receive emission reduction credit from these programs within their 15% Plans, even though the emissions reductions from the I/M program will occur after November 15, 1996. The provisions for crediting reductions for enhanced I/M programs is contained in two EPA policy memoranda: ''Date by which States Need to Achieve all the Reductions Needed for the 15 Percent Plan from I/M and Guidance for Recalculation,'' note from John Seitz and Margo Oge, dated August 13, 1996, and ''Modeling 15 Percent VOC Reductions from I/M in 1999—Supplemental Guidance,'' memorandum from Gay MacGregor and Sally Shaver, dated December 23, 1996. For the purposes of 15% Plan calculations then, EPA will allow Maryland to take credit for the enhanced I/M program even though the emission reductions from this program did not occur until after November 15, 1996.

In the case of the Baltimore nonattainment area, Maryland's 15% Plan SIP takes credit for the amount of reductions achieved by I/M through November 1999. Maryland's enhanced I/M program is a biennial program that meets the performance standards attributable to a ''high enhanced'' program. Maryland began testing cars under the enhanced program in October 1997. But because Maryland's program is biennial it will take two years to complete one full cycle of testing. EPA guidance allows states to assume credit from the enhanced I/M program through 1999 in the 15% Plan SIPs (see ''Modelling 15 Percent VOC Reductions from I/M in 1999—Supplemental Guidance'', memorandum from Gay MacGregor and Sally Shaver, dated December 23, 1996.) EPA converted its conditional approval of Maryland's enhanced I/M program to a full approval on October 29, 1999 (64 FR 58340).

4. Tier I New Vehicle Standards

The Act required EPA to issue Federal Motor Vehicle Control Program (Tier I) standards for new motor vehicles. The Tier I standards include exhaust (''tailpipe'') emission standards and better evaporative emission controls demonstrated through new federal evaporative test procedures. EPA promulgated the Tier I standards on June 5, 1991 (56 FR 25724). These Tier I standards were phased in beginning with model year 1994 vehicles and is a federally enforceable program. On average, Tier I cars will emit 0.077 fewer grams of VOCs per mile than older cars.

TABLE 4.—SUMMARY OF CONTROL MEASURES IN THE 15% PLAN FOR THE BALTIMORE OZONE NONATTAINMENT AREA

Control measure	VOC reductions (TPD)	SIP approved by EPA	Creditable for 15%
Graphic Arts	0.5	SIP approved September 2, 1997 [62 FR 46199]	Yes.
RACT—Polystyrene Products	0.1	SIP approved October 15, 1997 [62 FR 53544]	Yes.
RACT—Yeast Production	0.5	SIP approved October 15, 1997 [62 FR 53544]	Yes.
RACT—Bakeries	0.6	SIP approved October 15, 1997 [62 FR 53544]	Yes.
RACT—Screen Printing	0.5	SIP approved October 15, 1997 [62 FR 53544]	Yes.
Surface Cleaning/Degreasing	7.3	SIP approved August 4, 1997 [62 FR 41853]	Yes.
Autobody Refinishing	5.3	SIP approved August 4, 1997 [62 FR 41853]	Yes.
Landfill Controls			No.
Enhanced Rule Compliance	4.5	Implemented through Title V permits	Yes.

TABLE 4.—SUMMARY OF CONTROL MEASURES IN THE 15% PLAN FOR THE BALTIMORE OZONE NONATTAINMENT AREA—Continued

Control measure	VOC reductions (TPD)	SIP approved by EPA	Creditable for 15%
State Air Toxics	0.9	Implemented through Title V permits	Yes.
Open Burning Ban	3.6	SIP approved January 31, 1997	Yes.
AIM Coatings	5.4	Federal rule	Yes.
Consumer & Commercial Products	2.6	Federal rule	Yes.
Federal Air Toxics	0.4	Federal rules—MACT standards for Coke Ovens and Benzene NESHAP.	Yes.
Mobile Source Controls	53.2	RFG—Federal rule	Yes.
RFG		Enhanced I/M—SIP approved October 29, 1999 [64 58340]	Yes.
Enhanced I/M			
Stage 2		Stage 2—SIP approved 6/9/94.	
Tier 1 Tier 1 standards		Tier 1—Federal Rule.	
Total Creditable Emission Reductions	85.4		

VII. Remedying the Conditions for Full Approval

The conditions established for full approval of the Baltimore area 15% Plan were established in EPA's final conditional rulemaking on October 9, 1997 (62 FR 52661). Each of these conditions are discussed below. In response to the conditional rulemaking, Maryland submitted a revised 15% Plan for the Baltimore nonattainment area. All of the conditions have been satisfied in Maryland's revised submittal, and therefore, EPA is approving Maryland's October 7, 1998 15% Plan submittal for the Baltimore nonattainment area. Conditions of the October 9, 1997 rulemaking:

1. Maryland's 15% plan calculations must reflect the EPA approved 1990 base year emissions inventory.

Remedy: Maryland has revised the 1990 base year emissions inventory for the nonattainment area. The revised inventory is used as a basis for calculating the 15% target level according to EPA guidance. As part of today's rulemaking, EPA is also approving revisions to the base year inventory submitted by Maryland and therefore, this condition has been satisfied.

2. Maryland must meet the conditions listed in the October 31, 1996 conditional I/M rulemaking notice, including remodeling the reductions associated with I/M following EPA guidance.

Remedy: Maryland met all the conditions of EPA's October 31, 1996 conditional rulemaking on Maryland's enhanced I/M program. EPA fully approved the enhanced I/M program into the Maryland SIP on October 29, 1999 (64 FR 58340). Additionally, Maryland has remodeled the creditable emission reductions following EPA guidance documents and using EPA's MOBILE5b emissions model. This condition has been satisfied.

3. Maryland must remodel to determine affirmatively the creditable reductions from RFG and Tier 1 in accordance with EPA guidance.

Remedy: Maryland has remodeled all mobile source emission control programs, including RFG and Tier 1 following EPA guidance documents and using EPA's MOBILE5b emissions model. This condition has been satisfied.

4. Maryland must submit a SIP revision amending the 15% plan with a determination using appropriate documentation methodologies and credit calculations that satisfies Maryland's 15% ROP requirement.

Remedy: Maryland's revised 15% Plan submittal contains adequate documentation on VOC control measures to demonstrate the 15% reduction. All of the measures, except controls on landfills, have been adopted and implemented by the State and, where necessary, approved into the Maryland SIP. As documented in Table 2, ''Calculation of 15% Reduction Target Level'', to satisfy the 15% reduction target plus offset emissions growth during the period 1990–1996, Maryland must demonstrate a total reduction 68.7 TPD in VOC emissions. The control measures described in Maryland's 15% Plan produce 85.4 TPD in creditable VOC emission reductions, far more than the amount needed. Therefore, Maryland's plan satisfies the requirements of section 182(b)(1) of the Act and is approvable. This condition has also been satisfied.

A more detailed description of the state submittal and EPA's evaluation are included in a Technical Support Document (TSD) prepared in support of this rulemaking action. A copy of the TSD is available, upon request, from the EPA Regional Office listed in the **ADDRESSES** section of this document

EPA is publishing this rule without prior proposal because the Agency views this as a noncontroversial amendment and anticipates no adverse comment. However, in the ''Proposed Rules'' section of today's **Federal Register**, EPA is publishing a separate document that will serve as the proposal to approve the SIP revision if adverse comments are filed. This rule will be effective on March 20, 2000 without further notice unless EPA receives adverse comment by March 6, 2000. If EPA receives adverse comment, EPA will publish a timely withdrawal in the **Federal Register** informing the public that the rule will not take effect. EPA will address all public comments in a subsequent final rule based on the proposed rule. EPA will not institute a second comment period on this action. Any parties interested in commenting must do so at this time.

VIII. Final Action

EPA is converting its conditional approval of the 15% Plan for the Baltimore area to a full approval based upon Maryland's October 7, 1998 SIP revision of the 15% Plan for the Baltimore area. EPA is also approving revisions to the 1990 base year emissions inventory for the Baltimore nonattainment area submitted on December 24, 1997 as part of the Post-1996 Rate of Progress Plan for the Baltimore and Cecil County nonattainment areas.

IX. Administrative Requirements

A. General Requirements

Under Executive Order 12866 (58 FR 51735, October 4, 1993), this action is not a ''significant regulatory action'' and therefore is not subject to review by the Office of Management and Budget. This

action merely approves state law as meeting federal requirements and imposes no additional requirements beyond those imposed by state law. Accordingly, the Administrator certifies that this rule will not have a significant economic impact on a substantial number of small entities under the Regulatory Flexibility Act (5 U.S.C. 601 *et seq.*). Because this rule approves pre-existing requirements under state law and does not impose any additional enforceable duty beyond that required by state law, it does not contain any unfunded mandate or significantly or uniquely affect small governments, as described in the Unfunded Mandates Reform Act of 1995 (Pub. L. 104–4). For the same reason, this rule also does not significantly or uniquely affect the communities of tribal governments, as specified by Executive Order 13084 (63 FR 27655, May 10, 1998). This rule will not have substantial direct effects on the States, on the relationship between the national government and the States, or on the distribution of power and responsibilities among the various levels of government, as specified in Executive Order 13132 (64 FR 43255, August 10, 1999), because it merely approves a state rule implementing a federal standard, and does not alter the relationship or the distribution of power and responsibilities established in the Clean Air Act. This rule also is not subject to Executive Order 13045 (62 FR 19885, April 23, 1997), because it is not economically significant.

In reviewing SIP submissions, EPA's role is to approve state choices, provided that they meet the criteria of the Clean Air Act. In this context, in the absence of a prior existing requirement for the State to use voluntary consensus standards (VCS), EPA has no authority to disapprove a SIP submission for failure to use VCS. It would thus be inconsistent with applicable law for EPA, when it reviews a SIP submission, to use VCS in place of a SIP submission that otherwise satisfies the provisions of the Clean Air Act. Thus, the requirements of section 12(d) of the National Technology Transfer and Advancement Act of 1995 (15 U.S.C. 272 note) do not apply. As required by section 3 of Executive Order 12988 (61 FR 4729, February 7, 1996), in issuing this rule, EPA has taken the necessary steps to eliminate drafting errors and ambiguity, minimize potential litigation, and provide a clear legal standard for affected conduct. EPA has complied with Executive Order 12630 (53 FR 8859, March 15, 1988) by examining the takings implications of the rule in accordance with the ''Attorney General's Supplemental Guidelines for the Evaluation of Risk and Avoidance of Unanticipated Takings'' issued under the executive order. This rule does not impose an information collection burden under the provisions of the Paperwork Reduction Act of 1995 (44 U.S.C. 3501 *et seq.*).

B. Submission to Congress and the Comptroller General

The Congressional Review Act, 5 U.S.C. 801 *et seq.*, as added by the Small Business Regulatory Enforcement Fairness Act of 1996, generally provides that before a rule may take effect, the agency promulgating the rule must submit a rule report, which includes a copy of the rule, to each House of the Congress and to the Comptroller General of the United States. EPA will submit a report containing this rule and other required information to the U.S. Senate, the U.S. House of Representatives, and the Comptroller General of the United States prior to publication of the rule in the **Federal Register**. This rule is not a ''major rule'' as defined by 5 U.S.C. 804(2).

C. Petitions for Judicial Review

Under section 307(b)(1) of the Clean Air Act, petitions for judicial review of this action to convert the conditional approval of the 15% ROP Plan for the Baltimore nonattainment area to a full approval must be filed in the United States Court of Appeals for the appropriate circuit by April 3, 2000. Filing a petition for reconsideration by the Administrator of this final rule does not affect the finality of this rule for the purposes of judicial review nor does it extend the time within which a petition for judicial review may be filed, and shall not postpone the effectiveness of such rule or action. This action may not be challenged later in proceedings to enforce its requirements. (See section 307(b)(2).)

List of Subjects in 40 CFR Part 52

Environmental protection, Air pollution control, Hydrocarbons, Nitrogen dioxide, Ozone.

Dated: January 14, 2000.

Bradley M. Campbell,

Regional Administrator, Region III.

40 CFR part 52 is amended as follows:

PART 52—[AMENDED]

1. The authority citation for part 52 continues to read as follows:

Authority: 42 U.S.C. 7401 *et seq.*

Subpart V—Maryland

§ 52.1072 [Amended]

2. In section 52.1072, paragraph (c) is reserved.

3. Section 52.1075 is amended by adding paragraph (g) to read as follows:

§ 52.1075 1990 base year emission inventory.

* * * * *

(g) EPA approves revisions to the Maryland State Implementation Plan amending the 1990 base year emission inventories for the Baltimore ozone nonattainment area, submitted by the Secretary of Maryland Department of the Environment on December 24, 1997. This submittal consists of amendments to the 1990 base year point, area, highway mobile and non-road mobile source emission inventories for volatile organic compounds and nitrogen oxides in the Baltimore ozone nonattainment area.

4. Section 52.1076 is amended by adding paragraph (c) to read as follows:

§ 52.1076 Control strategies: ozone.

* * * * *

(c) EPA approves as a revision to the Maryland State Implementation Plan, the 15 Percent Rate of Progress Plan for the Baltimore ozone nonattainment area, submitted by the Secretary of Maryland Department of the Environment on October 7, 1998.

[FR Doc. 00–2175 Filed 2–2–00; 8:45 am]

BILLING CODE 6560–50–P

ENVIRONMENTAL PROTECTION AGENCY

40 CFR Part 52

[MD059–3049a; FRL–6530–8]

Approval and Promulgation of Air Quality Implementation Plans; Maryland, Post-1996 Rate of Progress Plan for Cecil County and Revisions to the 1990 Base Year Emissions Inventory

AGENCY: Environmental Protection Agency (EPA).

ACTION: Direct final rule.

SUMMARY: EPA is taking direct final action on revisions to the State of Maryland State Implementation Plan (SIP). This revision establishes the three percent per year emission reduction rate-of-progress requirement for the period from 1996 through 1999 for the Maryland portion of the Philadelphia-Wilmington-Trenton ozone nonattainment area, namely Cecil County, Maryland. EPA is also

approving revisions to the 1990 base year inventory of ozone precursor emissions submitted by the State of Maryland for Cecil County. EPA is approving these revisions to the Maryland SIP in accordance with the requirements of the Clean Air Act.

DATES: This rule is effective on April 3, 2000 without further notice, unless EPA receives adverse written comment by March 6, 2000. If EPA receives such comments, it will publish a timely withdrawal of the direct final rule in the **Federal Register** and inform the public that the rule will not take effect.

ADDRESSES: Written comments may be mailed to David L. Arnold, Chief, Ozone and Mobile Sources Branch, Mailcode 3AP21, U.S. Environmental Protection Agency, Region III, 1650 Arch Street, Philadelphia, Pennsylvania 19103. Copies of the documents relevant to this action are available for public inspection during normal business hours at the Air Protection Division, U.S. Environmental Protection Agency, Region III, 1650 Arch Street, Philadelphia, Pennsylvania 19103 and the Maryland Department of the Environment, 2500 Broening Highway, Baltimore, Maryland, 21224.

FOR FURTHER INFORMATION CONTACT: Kristeen Gaffney, (215) 814–2092. Or by e-mail at gaffney.kristeen@epa.gov.

SUPPLEMENTARY INFORMATION:

I. Background

Cecil County, Maryland is part of the Philadelphia-Wilmington-Trenton severe ozone nonattainment area. The Clean Air Act requires states with severe ozone nonattainment areas to develop plans to reduce emissions of volatile organic compounds (VOCs) from a 1990 baseline by three percent per year averaged over each consecutive three year period through the area's attainment date. This is known as the rate-of-progress (ROP) requirement. The first round of required ROP reductions cover the period 1990–1996 and is commonly known as the 15% ROP plan. The second round of required VOC reductions is commonly known as the Post-1996 ROP plan because it covers the three year time period from 1996–1999. The Post-1996 ROP plan, was due by November 15, 1994 and the reductions were to be achieved by November 15, 1999. The Clean Air Act also allows for the substitution of emission reductions of nitrogen oxides (NOx) occurring after 1990 for the Post-1996 VOC rate-of-progress requirements. To qualify for SIP credit under rate of progress plans, emission reduction measures, whether mandatory under the Act or adopted at the state's discretion, must ensure real, permanent, and enforceable emissions reductions.

On March 2, 1995, Assistant Administrator for Air and Radiation, Mary D. Nichols, issued a policy memorandum providing guidance to the states on an alternative approach for meeting the attainment demonstration and rate-of-progress requirements of the Clean Air Act. The policy memorandum established a phased approach for the submittal of the attainment demonstration. Under the first phase, states were to submit a plan with specific control measures, including a plan to show at least a 9% ROP reduction by 1999; interim assumptions or modeling about ozone transport; and enforceable commitments to: (1) Participate in a consultative process to address regional transport, (2) adopt additional control measures as necessary to attain the ozone national ambient air quality standard, and (3) identify any reductions that are needed from upwind areas for the area to meet the ozone standard.

On December 24, 1997, the Maryland Department of Environment (MDE) submitted a SIP for the Phase 1 attainment plans for the Baltimore nonattainment area and Cecil County. Maryland's Phase 1 attainment plan submittal contained the Post-1996 ROP requirements; revisions to the 1990 base year inventories for the Baltimore nonattainment area and Cecil County; revisions to the 15% ROP plans for Baltimore and Cecil County; and enforceable commitments to address the first phase of the attainment plan as discussed above. This rulemaking only addresses the Post-1996 ROP plan and 1990 base year inventory revisions for the Maryland portion of the Philadelphia-Wilmington-Trenton ozone nonattainment area, namely Cecil County, Maryland.

On August 17, 1998, MDE submitted additional information and revised mobile emissions modeling for the December 24, 1997 Post-1996 ROP submittal. The revised information was included in Maryland's Phase II attainment plan for the Baltimore nonattainment area and Cecil County. Specifically, the August 17, 1998 submittal requested that the chapter on conformity, including mobile source emission budgets, and Appendix E, including the target levels, emission estimates, projection year estimates and reduction credit estimates contained in the original Phase 1 plan be replaced by the information contained in the August 17, 1998 Phase 2 attainment plan submittal. For this rulemaking action, EPA has evaluated the portions of Maryland's August 17, 1998 submittal that relate to revisions to the Post-1996 ROP plan for the Maryland portion of the Philadelphia-Wilmington-Trenton ozone nonattainment area, namely Cecil County, Maryland.

II. Base Year Inventory Revisions

Maryland submitted the original 1990 base year emissions inventory for Cecil County as a SIP revision on March 21, 1994. EPA approved the base year inventory into the SIP on September 27, 1996 (61 FR 50715). As part of the Phase 1 attainment plan submittal of December 24, 1997, Maryland is revising certain portions of the 1990 base year inventory because of refinements, such as updated information on point source emissions, and to correct certain errors in the inventory found while auditing the inventory in preparation for the attainment demonstration modeling.

EPA is approving the revisions to the 1990 base year inventory for the Cecil County. Table 1 below illustrates the inventory revisions that will be approved into the Maryland SIP. A more detailed description of the changes to Maryland's base year inventories and EPA's evaluation are included in the technical support document (TSD) prepared in support of this rulemaking action. A copy of the TSD is available, upon request, from the EPA Regional Office listed in the **ADDRESSES** section of this document.

TABLE 1.—REVISED BASE YEAR INVENTORY FOR CECIL COUNTY IN TONS/DAY

	VOC previously approved	VOC revised	Change	NO_X previously approved	NO_X revised	Change
Mobile Sources	7.2	7.2	0	9.3	9.3	0
Point Sources	.55	.6	0	0	0	0
Non-road Sources	2.02	2.0	(+.02)	2.5	2.6	(+.1)
Area sources	9.23	8.7	(−.52)	1.1	1.8	(+.7)

TABLE 1.—REVISED BASE YEAR INVENTORY FOR CECIL COUNTY IN TONS/DAY—Continued

	VOC previously approved	VOC revised	Change	NO_X previously approved	NO_X revised	Change
Biogenic Sources	32.96	32.96	0	NA	NA	NA
Total	51.96	51.46	(−.5)	12.9	13.7	(+.8)

III. Post-1996 Rate-of-Progress Plan

A. Calculation of Needed Reductions

The first step in demonstrating ROP is to determine the target level of allowable emissions in the given target year. The target level of emissions represents the maximum amount of emissions that can be emitted in a nonattainment area in the given target year, which in this case is 1999. The Clean Air Act allows states to substitute NO_X emission reductions that occur after 1990 for VOC emission reductions in the Post-1996 ROP plan. Rate-of-progress is demonstrated when the sum of all creditable VOC and NO_X emission reductions equal at least 3% per year averaged over the three year period 1996–1999, or for a total of 9%. If a state wishes to substitute NO_X for VOC emission reductions, then a target level of emissions demonstrating a representative combined 9% emission reduction in VOC and NO_X emissions must be developed for the year 1999. MDE has established 1999 target levels for both VOC and NO_X emissions for Cecil County. However, the rate-of-progress control scenario for Cecil County is based on a 9% VOC and a 0% NO_X reduction strategy. Because enough VOC emission reductions exist to demonstrate the full 9% reduction, Maryland assumed no NO_X emission reductions to demonstrate rate-of-progress. Any NO_X emission reductions associated with Maryland's control strategies are considered surplus for the purposes of demonstrating rate-of-progress for 1999.

To calculate the target level of emissions, the percentage of required emission reductions is subtracted from the previously established ROP target level, which in this case would be the 15% ROP plan. For VOCs, the 1999 rate-of-progress VOC target level is based on the 1996 VOC target level calculated in the 15% ROP plan. EPA approved the 1996 VOC target level for Cecil County (14.1 tons per day or TPD) when it approved the Cecil County 15% ROP plan on July 29, 1997 (62 FR 40457). For NO_X, there is no previously established ROP target level, so the 1999 target level is calculated from the 1990 base year inventory. The target level calculations for Cecil County for the year 1999 are taken from the August 17, 1998 Phase 2 attainment plan SIP submittal and are presented below.

	Tons	Day
VOC Target Level		
1990 Base Year Inventory	.....	51.5
(Minus biogenic emissions 33.0 TPD)	−33.0	
1990 Rate of Progress Base Year Inventory	.....	18.5
(Minus non-creditable FMVCP/RVP [1] 1990–1999)	−2.1	
1990 Adjusted Base Year Inventory	.....	16.4
9% Required Reduction (1996–1999)	*.09	
Rate of Progress Emission reduction requirement	.....	1.5
Fleet Turnover Calculation:		
1999 emissions	2.1	
1996 emissions	−2.1	
Fleet Turnover correction	0.0	
1996 Target Level	.....	14.1
Minus Emission Reduction Requirement	−1.5	
Minus Fleet Turnover Correction	−0.0	
1999 VOC Target Level	.....	12.6
NO_X Target Level		
1990 Base Year Inventory	.....	13.7
(Minus non-creditable FMVCP/RVP 1990–1999)	−1.7	
1990 Adjusted Base Year Inventory	.....	12.0
9% Required Reduction (1996–1999)	0.0	
Rate of Progress Emission reduction requirement	.....	0.0
Fleet Turnover Calculation:		
1999 emissions	1.7	
1996 emissions	−1.7	
Fleet Turnover correction	.....	0.0
1990 Adjusted Base Year Inventory	.....	12.0
Minus Emission Reduction Requirement	−0.0	
Minus Fleet Turnover Correction	−0.0	

	Tons	Day
1999 NO_X Target Level	.....	12.0

[1] The 1990 adjusted base year inventory excludes from the baseline the emissions that would be eliminated by the Federal Motor Vehicle Control Program (FMVCP) and Reid Vapor Pressure (RVP) regulations promulgated prior to enactment of the 1990 Clean Air Act amendments.

Maryland has correctly calculated the 1999 target level of emissions for Cecil County following EPA's guidance.

B. Growth Projections

In addition to achieving a 9% reduction in existing emissions, the state's control strategy must also offset any new emissions growth projected to occur between 1996 and 1999. Therefore, states must project their emission inventories to estimate emissions growth between 1996 and 1999 (the ROP year for the Post-1996 plan). The projected inventories must reflect expected growth in activity, as well as regulatory actions which will affect emission levels.

EPA guidance on projecting emissions growth suggests that emission projections for point sources can be based on information obtained directly from facilities and/or permit applications. Area and mobile source emission projections may be developed from information from local planning agencies. In the absence of source-specific data, credible growth factors must be developed from accurate forecasts of economic variables and the activities associated with the variables. Economic variables that may be used as indicators of activity growth are: product output, value added, earnings, and employment. Population can also serve as a surrogate indicator.

Economic data and models which provide acceptable growth factors for emission projections include the U.S. Department of Commerce Bureau of Economic Analysis (BEA) forecasts for states and metropolitan statistical areas; the Economic Growth Analysis System (E-GAS), which models economic growth and estimates corresponding increases in emissions-producing activity; and the Emissions Preprocessor System for urban airshed modeling, which produces spatially and temporally resolved emission inventories for input into urban airshed models.

1. Point Source Growth

Cecil County is rural in nature, lacks a base of heavy industry and has no existing major point sources of NO_X. Therefore, Maryland predicts no growth in either VOC or NO_X point source emissions between 1996 and 1999.

2. Area Source Growth

Growth factors from the BEA were used for area sources. Maryland chose BEA over E-GAS for area source growth estimates, because two area source categories, consumer and commercial products and new motor vehicle refinishing were projected by E-GAS to decrease over the next ten years due to a predicted population decrease. Because this directly contradicts industry projections and Maryland's expectations, E-GAS was not used for area source predictions. The use of BEA or E-GAS is acceptable.

3. Mobile Source Growth

Mobile source growth in Cecil County is based on vehicle miles traveled (VMT) trends from 1986–1991. The 1990 base year inventory for Cecil County was based on Highway Performance Monitoring System data because the county is not part of an urban transportation network. The Maryland Department of Transportation and the Wilmington Area Planning Council have developed a link-based transportation modeling technique to provide a detailed analysis of travel patterns in the Cecil County-Wilmington area. Mobile source emissions estimates and VOC target levels for 1999 were developed using the link-based travel estimates. This is an acceptable approach.

4. Non-Road Mobile Source Growth

Maryland used E-GAS growth factors for determining future emissions of non-road sources. These inventories were estimated as a product of equipment population, activity rates and emission factors. Population and value added were also used as surrogate indicators where appropriate. Emissions were projected by multiplying 1990 emissions by the E-GAS growth factor.

Maryland has used appropriate methodology to project emissions growth in all source categories. The growth estimates are approvable. The projection year inventories for 1999 for Cecil County are shown in Table 2 below. Total 1999 growth projections for VOCs are 2.9 TPD and 3.4 TPD for NO_X.

TABLE 2.—PROJECTION YEAR (UNCONTROLLED) INVENTORIES FOR CECIL COUNTY (TONS/DAY)

Source category	1990 VOC baseline	1999 VOC projected	1990 NO_X baseline	1999 NO_X projected
Point	0.6	0.6	0	0
Mobile	7.2	9.5	9.3	12.4
Non-road	2.0	2.3	2.6	2.8
Area	8.7	9.0	1.8	1.9
Total	18.5	21.4	13.7	17.1

C. Evaluation of Control Measures

The purpose of the Post-1996 ROP plan is to demonstrate how the State has reduced emissions 3% per year between the years 1996 and 1999, for a 9% total reduction. In general, reductions toward ROP requirements are creditable provided the control measures occurred after 1990 and before November 15, 1999 and are real, permanent, quantifiable and federally enforceable. A short description of each of the control measures implemented by Maryland follows.

1. Stationary Source Controls

a. Seasonal Open Burning Ban. On May 1, 1995, Maryland instituted a ban on open burning during the peak ozone season in Maryland's severe and serious ozone nonattainment areas. Maryland considers the months of June, July, and August the peak ozone season, because that is when ambient levels of ozone in Maryland are usually the highest. During the peak ozone season, the practice of burning for the disposal of brush and yard waste as a method of land clearing has been banned. This ban on open burning reduces both VOC and NO_X emissions. EPA approved Maryland's open burning ban (COMAR

26.11.07) into the SIP on January 31, 1997. MDE estimates 4.4 TPD VOC and 0.9 TPD NO_X emission reductions from the open burning ban in Cecil County. These reductions are creditable in the Post-1996 Plan.

b. Consumer and Commercial Products National Rule. On September 11, 1998, EPA issued a final rule (63 FR 48819) to reduce the VOC content of 24 categories of household consumer and commercial products by 20% from levels emitted in 1990. The regulation applies to 24 types of household consumer products, such as cleaning products, personal care products, and a variety of insecticides. EPA policy allows states to claim up to a 20% reduction of total consumer product emissions towards the ROP requirement. Maryland claimed a 20% reduction from their 1999 projected uncontrolled consumer and commercial products emissions in the Post-1996 ROP plan in Cecil County. EPA has determined that 0.1 TPD VOCs in Cecil County are creditable emission reductions.

c. Stage I Vapor Recovery. Stage I vapor recovery systems control vapor emissions at gasoline dispensing facilities that result from unloading gasoline from a tank truck into a storage tank. The vapors displaced in the storage tank by the liquid gasoline are retrieved into the tank truck and transported back to the refinery. Stage 1 vapor recovery controls were implemented in Cecil County on April 26, 1992. EPA approved Maryland's Stage I vapor recovery regulation into the Maryland SIP (60 FR 2018). Maryland claimed 0.8 TPD VOCs emission reductions in 1999 for Cecil County, which are creditable toward the Post-1996 ROP plan.

d. Autobody Refinishing. Maryland adopted an autobody refinishing regulation, COMAR 26.11.19.23, to control VOC emissions emanating from the evaporation of solvents used in the coating, drying and clean-up process. Maryland's regulation was approved into the SIP on August 4, 1997 (62 FR 41853). From this regulation, Maryland claimed a reduction of 0.2 TPD VOC emissions in Cecil County, which are creditable toward the ROP requirement.

e. Architectural and Industrial Maintenance (AIM) Coatings Reformulation. On September 11, 1998, EPA promulgated a national rule (63 FR 48848) for reducing VOCs emissions from architectural and other industrial coatings. Architectural coatings are commonly applied by consumers and contractors, and include exterior and interior paints, industrial maintenance coatings, wood and roof coatings, primers, and traffic paints. Manufacturers and importers are required to comply with requirements by September 1999. States are allowed to assume a 20% reduction in VOCs from 1990 emission levels in their ROP plans. Maryland claimed a 20% reduction in VOC emissions in Cecil County or 0.2 TPD. These emission reductions are creditable in the Post-1996 ROP plan.

f. Surface Cleaning and Degreasing. This measure strengthens an existing Maryland regulation for surface cleaning (also called cold cleaning and degreasing) devices and operations to require more stringent emission control requirements and enlarges the field of applicable sources. This regulation controls VOC emissions from surface cleaning/degreasing operations, such as gasoline stations, autobody paint shops and machine shops that fall into the area source category. Maryland's surface cleaning and degreasing regulation (COMAR 26.11.19.09) was approved into the SIP on August 4, 1997 (62 FR 41853). In Cecil County, 0.2 TPD VOC emission reductions achieved through this measure are creditable.

2. Mobile Source Controls

a. Federal Motor Vehicle Control Program—Tier I. The Clean Air Act required EPA to issue federal emission standards for new motor vehicles. The Tier I motor vehicle standards were promulgated on June 5, 1991 (56 FR 25724) and include exhaust (''tailpipe'') emission standards and better evaporative emission controls demonstrated through new federal evaporative test procedures. Both VOC and NO_X emissions from passenger vehicles and light-duty trucks are reduced as a result of these standards. Tier I standards were phased in beginning with model year 1994 vehicles. Emission reductions associated with Tier 1 standards can be determined through use of EPA's mobile emissions model, MOBILE5b. The following emission reductions from Tier 1 standards are creditable through 1999 in Cecil County: VOCs 0.2 TPD and NO_X 0.8 TPD.

b. Enhanced Inspection and Maintenance Program. Under section 182 of the Act, Maryland was required to adopt an enhanced inspection and maintenance (I/M) program. Enhanced I/M programs reduce the emissions created by vehicles through periodic testing and, if needed, repair of the vehicle's tailpipe emissions and evaporative systems. Maryland has adopted regulations and began implementing the enhanced I/M program in 1997. EPA approved Maryland's enhanced I/M program on October 29, 1999 (64 FR 58340). Emission reductions associated with enhanced I/M can be determined through use of EPA's mobile emissions model MOBILE5b. Maryland claimed creditable emission reductions of 1.8 TPD of VOCs and 1.4 TPD of NO_X in Cecil County from the enhanced I/M program.

c. Reformulated Gasoline Federal Rule—Phase 1. The Act requires, beginning January 1, 1995, that only reformulated gasoline (RFG) be sold or dispensed in ozone nonattainment areas classified as severe or worse. Gasoline for use in motor vehicles is reformulated to reduce VOC combustion by-products and to produce fewer evaporative VOC emissions. The Act requires a reduction in VOC and toxic emissions from gasoline of 15% over base year levels beginning in 1995 and a 25% requirement beginning in the year 2000 (Phase 2 RFG). The RFG program was implemented by EPA through a national rule (59 FR 7716). Cecil County is designated as a severe nonattainment area and, therefore, subject to RFG requirements. Emission reductions associated with RFG can be determined through use of EPA's mobile emissions model MOBILE5b. Maryland has claimed 0.3 TPD creditable VOC emission reductions associated with Phase 1 RFG in Cecil County.

d. Stage II Gasoline Vapor Recovery. The Act requires all owners and operators of gasoline dispensing systems in moderate and above ozone nonattainment areas to install and operate a system for gasoline vapor recovery (known as Stage II) of emissions from the fueling of motor vehicles. Stage II vapor recovery reduces the VOC emissions during the refueling of motor vehicles at gasoline service stations. The Stage II vapor recovery nozzles at gasoline pumps capture the gasoline-rich vapors displaced by liquid fuel during the refueling process. EPA approved Maryland's Stage II regulation, COMAR 26.11.24, on June 9, 1994. Stage II is a creditable measure in counties where these controls were not required before 1990. Emission reductions associated with Stage II Vapor Recovery and On Board Vapor Recovery systems can be determined through use of EPA's mobile emissions model MOBILE5b. In Cecil County, 0.3 TPD are creditable VOC reductions.

3. Non-Road Mobile Source Controls

a. Non-Road Small Gasoline Engines. In July 1995, EPA finalized the first federal regulations affecting small non-road spark-ignition (SI) engines at or below 19 kilowatts (kW), or 25

horsepower. The standards set allowable exhaust levels for hydrocarbons, carbon monoxide, and NO_X from small engines of 25 HP or less. The regulations took effect for most new handheld (chainsaws and leaf blowers, etc.) and non-handheld (lawn mowers, garden tractors, tillers, etc.) engines beginning in model year 1997 and are expected to result in a 32% reduction in hydrocarbon emissions from these engines. On November 24, 1994, EPA issued a guidance memorandum to states regarding calculation of the emission reduction benefit of various non-road engine standards for the purposes of rate-of-progress planning. See ''Future Non-road Emission Reduction Credits for Court-Ordered Non-road Standards'', from Philip A. Lorang, Director, Emission Planning and Strategies Division. This memorandum advised states to assume in 1999 a 22.9% reduction in VOCs for the non-road portion of the inventory affected by these standards. Maryland has claimed 0.4 TPD reduction in VOC emissions from this control measure.

b. Non-Road Heavy Duty Diesel Engines. EPA promulgated final regulations applicable to non-road compression-ignition engines at or above 37 kilowatts on June 17, 1994 (59 FR 31306). These emissions standards affect non-road engines over 50 horsepower (such as bulldozers) and are being phased-in from 1996 to 2000 based on engine power. According to the November 24, 1994 Philip Lorang memorandum, states should assume in 1999 a 7.8% reduction in NO_X for the non-road portion of the inventory affected by the non-road heavy duty diesel standards. Maryland has claimed 0.2 TPD reduction in NO_X emissions in 1999 from this control measure.

Table 3 below summarizes the emission reductions from the control measures used in the Cecil County Post-1996 ROP plan.

TABLE 3.—CECIL COUNTY POST-1996 ROP PLAN MEASURES

Measure	1999 VOC reduction (TPD)	1999 NO_X reduction (TPD)	Creditable
Architectural Coatings	0.2		Yes.
Consumer and Commercial Products	0.1		Yes.
Autobody Refinishing	0.2		Yes.
Surface Cleaning	0.2		Yes.
Stage 1 Vapor Recovery	0.8		Yes.
Tier 1 Federal Motor Vehicle Standards	0.2	0.8	Yes.
Enhanced I/M	1.8	1.4	Yes.
Reformulated Gasoline	0.2		Yes.
Stage 2 Vapor Recovery	0.3		Yes.
Non-road Heavy Duty Diesel Engine Standards		0.2	Yes.
Non-road Small Gas Engine Standards	0.4		Yes.
Open Burning	4.4	0.9	Yes.
Total	8.8	3.3	

D. Summary of Evaluation

Maryland's rate-of-progress requirements for Cecil County are summarized in Table 4.

TABLE 4

	VOC	NO_X
Projected 1999 Uncontrolled Emissions	22.2	17.4
Reductions From Creditable Measures (includes growth)	8.8	3.3
Reductions from FMVCP/RVP	3.7	2.7
Emissions Level Obtained in 1999	9.7	11.4
Projected 1999 Target Level	12.6	12.0
Surplus	2.9	0.6

EPA's review of Maryland's submittal indicates that the State has adopted and implemented adequate measures in the Cecil County to achieve the goal of a 9% reduction in ozone precursor emissions between 1996 and 1999. EPA is approving the Post-1996 ROP plan for the Cecil County portion of the Philadelphia-Wilmington-Trenton severe ozone nonattainment area. Additionally, EPA is approving revisions to the 1990 base year inventory for Cecil County. EPA has determined that the requested revisions to the inventory satisfy the relevant requirements of the Act and EPA guidance on inventory development.

EPA is publishing this rule without prior proposal because the Agency views this as a noncontroversial amendment and anticipates no adverse comment. However, in the ''Proposed Rules'' section of today's **Federal Register**, EPA is publishing a separate document that will serve as the proposal to approve the Post-1996 ROP Plan for Cecil County if adverse comments are filed. This rule will be effective on April 3, 2000 without further notice unless EPA receives adverse comment by March 6, 2000. If EPA receives adverse comment, EPA will publish a timely withdrawal in the **Federal Register** informing the public that the rule will not take effect. EPA will address all public comments in a subsequent final rule based on the proposed rule. EPA will not institute a second comment period on this action. Any parties

interested in commenting must do so at this time.

IV. Final Action

EPA is approving the Post-1996 ROP plan for the Cecil County portion of the Philadelphia-Wilmington-Trenton severe ozone nonattainment area, submitted by the State of Maryland on December 24, 1997, as modified on August 17, 1998. EPA is also approving revisions to 1990 base year VOC and NO_X emission inventories for Cecil County submitted by the State of Maryland on December 24, 1997.

V. Administrative Requirements

A. General Requirements

Under Executive Order 12866 (58 FR 51735, October 4, 1993), this action is not a ''significant regulatory action'' and therefore is not subject to review by the Office of Management and Budget. This action merely approves state law as meeting federal requirements and imposes no additional requirements beyond those imposed by state law. Accordingly, the Administrator certifies that this rule will not have a significant economic impact on a substantial number of small entities under the Regulatory Flexibility Act (5 U.S.C. 601 *et seq.*). Because this rule approves pre-existing requirements under state law and does not impose any additional enforceable duty beyond that required by state law, it does not contain any unfunded mandate or significantly or uniquely affect small governments, as described in the Unfunded Mandates Reform Act of 1995 (Pub. L. 104–4). For the same reason, this rule also does not significantly or uniquely affect the communities of tribal governments, as specified by Executive Order 13084 (63 FR 27655, May 10, 1998). This rule will not have substantial direct effects on the States, on the relationship between the national government and the States, or on the distribution of power and responsibilities among the various levels of government, as specified in Executive Order 13132 (64 FR 43255, August 10, 1999), because it merely approves a state rule implementing a federal standard, and does not alter the relationship or the distribution of power and responsibilities established in the Clean Air Act. This rule also is not subject to Executive Order 13045 (62 FR 19885, April 23, 1997), because it is not economically significant.

In reviewing SIP submissions, EPA's role is to approve state choices, provided that they meet the criteria of the Clean Air Act. In this context, in the absence of a prior existing requirement for the State to use voluntary consensus standards (VCS), EPA has no authority to disapprove a SIP submission for failure to use VCS. It would thus be inconsistent with applicable law for EPA, when it reviews a SIP submission, to use VCS in place of a SIP submission that otherwise satisfies the provisions of the Clean Air Act. Thus, the requirements of section 12(d) of the National Technology Transfer and Advancement Act of 1995 (15 U.S.C. 272 note) do not apply. As required by section 3 of Executive Order 12988 (61 FR 4729, February 7, 1996), in issuing this rule, EPA has taken the necessary steps to eliminate drafting errors and ambiguity, minimize potential litigation, and provide a clear legal standard for affected conduct. EPA has complied with Executive Order 12630 (53 FR 8859, March 15, 1988) by examining the takings implications of the rule in accordance with the ''Attorney General's Supplemental Guidelines for the Evaluation of Risk and Avoidance of Unanticipated Takings'' issued under the executive order. This rule does not impose an information collection burden under the provisions of the Paperwork Reduction Act of 1995 (44 U.S.C. 3501 *et seq.*).

B. Submission to Congress and the Comptroller General

The Congressional Review Act, 5 U.S.C. 801 *et seq.*, as added by the Small Business Regulatory Enforcement Fairness Act of 1996, generally provides that before a rule may take effect, the agency promulgating the rule must submit a rule report, which includes a copy of the rule, to each House of the Congress and to the Comptroller General of the United States. EPA will submit a report containing this rule and other required information to the U.S. Senate, the U.S. House of Representatives, and the Comptroller General of the United States prior to publication of the rule in the **Federal Register**. This rule is not a ''major rule'' as defined by 5 U.S.C. 804(2).

C. Petitions for Judicial Review

Under section 307(b)(1) of the Clean Air Act, petitions for judicial review of this action to approve Maryland's Post-1996 ROP plan for Cecil County must be filed in the United States Court of Appeals for the appropriate circuit by April 3, 2000. Filing a petition for reconsideration by the Administrator of this final rule does not affect the finality of this rule for the purposes of judicial review nor does it extend the time within which a petition for judicial review may be filed, and shall not postpone the effectiveness of such rule or action. This action may not be challenged later in proceedings to enforce its requirements. (See section 307(b)(2).)

List of Subjects in 40 CFR Part 52

Environmental protection, Air pollution control, Hydrocarbons, Nitrogen dioxide, Ozone.

Dated: January 14, 2000.

Bradley M. Campbell,

Regional Administrator, Region III.

40 CFR part 52 is amended as follows:

PART 52—[AMENDED]

1. The authority citation for part 52 continues to read as follows:

Authority: 42 U.S.C. 7401 *et seq.*

Subpart V—Maryland

2. Section 52.1075 is amended by adding paragraph (h) to read as follows:

§ 52.1075 1990 base year emission inventory.

* * * * *

(h) EPA approves revisions to the Maryland State Implementation Plan amending the 1990 base year emission inventories for the Cecil County portion of the Philadelphia-Wilmington-Trenton ozone nonattainment area, submitted by the Secretary of Maryland Department of the Environment on December 24, 1997. This submittal consists of amendments to the 1990 base year point, area, highway mobile and non-road mobile source emission inventories for volatile organic compounds and nitrogen oxides in the Cecil County portion of the Philadelphia-Wilmington-Trenton ozone nonattainment area.

3. Section 52.1076 is amended by adding paragraph (e) to read as follows:

§ 52.1076 Control strategies: ozone.

* * * * *

(e) EPA approves as a revision to the Maryland State Implementation Plan, the Post-1996 Rate of Progress Plan for the Cecil County portion of the Philadelphia-Wilmington-Trenton ozone nonattainment area, submitted by the Secretary of Maryland Department of the Environment on December 24, 1997, and as modified on August 17, 1998.

[FR Doc. 00–2173 Filed 2–2–00; 8:45 am]

BILLING CODE 6560–50–U

ENVIRONMENTAL PROTECTION AGENCY

40 CFR Part 52

[CA172–0209a; FRL–6529–4]

Approval and Promulgation of Implementation Plans; California State Implementation Plan Revision, Kern County Air Pollution Control District

AGENCY: Environmental Protection Agency (EPA).

ACTION: Direct final rule.

SUMMARY: EPA is taking direct final action on revisions to the California State Implementation Plan. The revisions concern rules from the Kern County Air Pollution Control District (KCAPCD). This approval action will incorporate these rules into the federally approved SIP. The intended effect of approving these rules is to regulate emissions of volatile organic compounds (VOCs) in accordance with the requirements of the Clean Air Act, as amended in 1990 (CAA or the Act). The revised rules control VOC emissions from fugitive emissions and the loading of organic liquids. Thus, EPA is finalizing the approval of these revisions into the California SIP under provisions of the CAA regarding EPA action on SIP submittals, SIPs for national primary and secondary ambient air quality standards and plan requirements for nonattainment areas.

DATES: This rule is effective on April 3, 2000 without further notice, unless EPA receives adverse comments by March 6, 2000. If EPA receives such comment, it will publish a timely withdrawal **Federal Register** informing the public that this rule will not take effect.

ADDRESSES: Written comments must be submitted to Andrew Steckel at the Region IX office listed below. Copies of the rule revisions and EPA's evaluation report for each rule are available for public inspection at EPA's Region IX office during normal business hours. Copies of the submitted rule revisions are available for inspection at the following locations:

Rulemaking Office (AIR–4), Air Division, U.S. Environmental Protection Agency, Region IX, 75 Hawthorne Street, San Francisco, CA 94105

Environmental Protection Agency, Air Docket (6102), 401 ''M'' Street, S.W., Washington, D.C. 20460

California Air Resources Board, Stationary Source Division, Rule Evaluation Section, 2020 ''L'' Street, Sacramento, CA 95812

Kern County Air Pollution Control District, 2700 M. Street, Suite 302, Bakersfield, CA 93301.

FOR FURTHER INFORMATION CONTACT: Christine Vineyard, Rulemaking Office, AIR–4, Air Division, U.S. Environmental Protection Agency, Region IX, 75 Hawthorne Street, San Francisco, CA 94105, Telephone: (415) 744–1197.

SUPPLEMENTARY INFORMATION:

I. Applicability

The rules being approved into the California SIP include: KCAPCD Rule 413, Organic Liquid Loading and KCAPCD Rule 414.1, Valves, Pressure Relief Valves, Flanges, Threaded Connections and Process Drains at Petroleum Refineries and Chemical Plants. These rules were submitted by the California Air Resources Board (CARB) to EPA on May 10, 1996.

II. Background

On March 3, 1978, EPA promulgated a list of ozone nonattainment areas under the provisions of the Clean Air Act, as amended in l977 (1977 Act or pre-amended Act), that included the San Joaquin Valley Area which encompassed the following eight air pollution control districts (APCDs): Fresno County APCD, Kern County APCD, [1] Kings County APCD, Madera County APCD, Merced County APCD, San Joaquin County APCD, Stanislaus County APCD, and Tulare County APCD. 43 FR 8964, 40 CFR 81.305. On March 20, 1991, the San Joaquin Valley Unified APCD (SJVUAPCD) was formed. The SJVUAPCD has authority over the San Joaquin Valley Air Basin which includes all of the above eight counties except for the Southeast Desert Air Basin portion of Kern County. Thus the Kern County Air Pollution Control District still exists, but only has authority over the Southeast Desert Desert Air Basin portion of Kern County.

On May 26, 1988, EPA notified the Governor of California, pursuant to section 110(a)(2)(H) of the 1977 Act, that portions of the California SIP were inadequate to attain and maintain the ozone standard and requested that deficiencies in the existing SIP be corrected (EPA's SIP-Call). [2] On November 15, 1990, the Clean Air Act Amendments of 1990 were enacted. Public Law 101–549, 104 Stat. 2399, codified at 42 U.S.C. 7401–7671q. In amended section 182(a)(2)(A) of the CAA, Congress statutorily adopted the requirement that nonattainment areas fix their deficient reasonably available control technology (RACT) rules for ozone and established a deadline of May 15, 1991 for states to submit corrections of those deficiencies.

Section 182(a)(2)(A) applies to areas designated as nonattainment prior to enactment of the amendments and classified as marginal or above as of the date of enactment. It requires such areas to adopt and correct RACT rules pursuant to pre-amended section 172(b) as interpreted in pre-amendment guidance. [3] EPA's SIP-Call used that guidance to indicate the necessary corrections for specific nonattainment areas. The Southeast Desert Air Basin portion of Kern County was not a pre-amendment nonattainment area, and therefore, was not designated and classified upon enactment of the amended Act. Consequently, KCAPCD is not subject to the section 182(a)(2)(A) RACT fix-up requirement. The KCAPCD is subject to the requirements of EPA's SIP-Call, because the SIP-Call included all of Kern County. The Southeast Desert is classified as serious; [4] therefore, this area was subject to the RACT fix-up requirement and the May 15, 1991 deadline.

The State of California submitted many revised RACT rules for incorporation into its SIP on May 10, 1996, including the rules being acted on in this document. This document addresses EPA's direct-final action for KCAPCD Rule 413, Organic Liquid Loading and Rule 414.1, Valves, Pressure Relief Valves, Flanges, Threaded Connections and Process Drains at Petroleum Refineries and Chemical Plants. KCAPCD adopted these rules on March 7, 1996. These submitted rules were found to be complete on July 19, 1996 pursuant to EPA's completeness criteria that are set forth in 40 CFR part 51, appendix V [5]

[1] At that time, Kern County included portions of two air basins; the San Joaquin Valley Air Basin and the Southeast Desert Air Basin. The San Joaquin Valley Air Basin portion of Kern County was designated as nonattainment, and the Southeast Desert Air Basin portion of Kern County was designated as unclassified. See 40 CFR 81.305 (1991).

[2] EPA's SIP-Call applied to all of the KCAPCD, including the Southeast Desert Air Basin portion of Kern County.

[3] Among other things, the pre-amendment guidance consists of those portions of the proposed post-1987 ozone and carbon monoxide policy that concern RACT, 52 FR 45044 (November 24, 1987); ''Issues Relating to VOC Regulation Cutpoints, Deficiencies, and Deviations, Clarification to Appendix D of November 24, 1987 **Federal Register** document'' (Blue Book) (notice of availability was published in the **Federal Register** on May 25, 1988); and the existing control technique guidelines (CTGs).

[4] The Southeast Desert Air Basin portion of Kern County was designated nonattainment on November 6, 1991 (56 FR 56694).

[5] EPA adopted the completeness criteria on February 16, 1990 (55 FR 5830) and, pursuant to section 110(k)(1)(A) of the CAA, revised the criteria on August 26, 1991 (56 FR 42216).

and is being finalized for approval into the SIP.

KCAPCD Rule 413 controls VOC emissions associated with the loading of organic liquids. KCAPCD Rule 414.1 applies to all valves, pressure relief valves, flanges, threaded connections and process drains at petroleum refineries and chemical plants that may be the source of fugitive VOC emissions. VOCs contribute to the production of ground level ozone and smog. These rules were originally adopted as part of KCAPCD's effort to achieve the National Ambient Air Quality Standard (NAAQS) for ozone and in response to EPA's SIP-Call and the section 182(a)(2)(A) CAA requirement. The following is EPA's evaluation and final action for these rules.

III. EPA Evaluation and Action

In determining the approvability of a VOC rule, EPA must evaluate the rule for consistency with the requirements of the CAA and EPA regulations, as found in section 110 and part D of the CAA and 40 CFR part 51 (Requirements for Preparation, Adoption, and Submittal of Implementation Plans). The EPA interpretation of these requirements, which forms the basis for today's action, appears in the various EPA policy guidance documents listed in footnote 1. Among those provisions is the requirement that a VOC rule must, at a minimum, provide for the implementation of RACT for stationary sources of VOC emissions. This requirement was carried forth from the pre-amended Act.

For the purpose of assisting state and local agencies in developing RACT rules, EPA prepared a series of Control Technique Guideline (CTG) documents. The CTGs are based on the underlying requirements of the Act and specify the presumptive norms for what is RACT for specific source categories. Under the CAA, Congress ratified EPA's use of these documents, as well as other Agency policy, for requiring States to ''fix-up'' their RACT rules. See section 182(a)(2)(A). The CTGs applicable to all of these rules are entitled: Control of Hydrocarbons from Tank Truck Gasoline Loading Terminals, (EPA–450/2–77–026); Control of Volatile Organic Emissions from Bulk Gasoline Plants, (EPA–450/2–77–035); Control of Volatile Organic Compound Leaks from Gasoline Tank Trucks and Vapor Collection Systems, (EPA–450/2–78–051); and Control of Volatile Organic Compounds Leaks from Synthetic Organic Chemical and Polymer Manufacturing Equipment, (EPA–450/3–83–006). Further interpretations of EPA policy are found in the Blue Book, referred to in footnote 1. In general, these guidance documents have been set forth to ensure that VOC rules are fully enforceable and strengthen or maintain the SIP.

KCAPCD Rule 414.1, Valves, Pressure Relief Valves, Flanges, Threaded Connections and Process Drains at Petroleum Refineries and chemical Plants has been revised to delete the definition of VOC and to reference District Rule 102, Definitions.

KCAPCD Rule 413, Organic Liquid Loading has been revised to delete the definition of VOC and to reference District Rule 102, Definitions. In addition, the Equipment section of Rule 413 was revised to clarify the pressure requirement for delivery trucks being loaded with organic liquids. The changes to Rule 414.1 and Rule 413 do not have a significant impact on air quality.

EPA has evaluated the submitted rules and has determined that they are consistent with the CAA, EPA regulations, and EPA policy. Therefore, KCAPCD Rule 414.1, Valves, Pressure Relief Valves, Flanges, Threaded Connections and Process Drains at Petroleum Refineries and chemical Plants, and Rule 413, Organic Liquid Loading are being approved under section 110(k)(3) of the CAA as meeting the requirements of section 110(a) and part D.

EPA is publishing these rules without prior proposal because the Agency views this as noncontroversial amendment and anticipates no adverse comments. However, in the proposed rules section of this **Federal Register** publication, EPA is publishing a separate document that will serve as the proposal to approve the SIP revision should adverse comments be filed. These rules will be effective April 3, 2000 without further notice unless the Agency receives adverse comments by March 6, 2000.

If the EPA receives such comments, then EPA will publish a timely withdrawal in the **Federal Register** informing the public that the rule will not take effect. All public comments received will then be addressed in a subsequent final rule based on the proposed rule. The EPA will not institute a second comment period. Any parties interested in commenting on these rules should do so at this time. If no such comments are received, the public is advised that this rule is effective on April 3, 2000 and no further action will be taken on the proposed rule.

IV. Administrative Requirements

A. Executive Order 12866

The Office of Management and Budget (OMB) has exempted this regulatory action from Executive Order 12866, entitled ''Regulatory Planning and Review.''

B. Executive Order 13132

Federalism (64 FR 43255, August 10, 1999) revokes and replaces Executive Orders 12612, Federalism and 12875, Enhancing the Intergovernmental Partnership. Executive Order 13132 requires EPA to develop an accountable process to ensure ''meaningful and timely input by State and local officials in the development of regulatory policies that have federalism implications.'' ''Policies that have federalism implications'' is defined in the Executive Order to include regulations that have ''substantial direct effects on the States, on the relationship between the national government and the States, or on the distribution of power and responsibilities among the various levels of government.'' Under Executive Order 13132, EPA may not issue a regulation that has federalism implications, that imposes substantial direct compliance costs, and that is not required by statute, unless the Federal government provides the funds necessary to pay the direct compliance costs incurred by State and local governments, or EPA consults with State and local officials early in the process of developing the proposed regulation. EPA also may not issue a regulation that has federalism implications and that preempts State law unless the Agency consults with State and local officials early in the process of developing the proposed regulation.

This rule will not have substantial direct effects on the States, on the relationship between the national government and the States, or on the distribution of power and responsibilities among the various levels of government, as specified in Executive Order 13132 (64 43255, August 10, 1999), because it merely approves a state rule implementing a federal standard, and does not alter the relationship or the distribution of power and responsibilities established in the Clean Air Act. Thus, the requirements of section 6 of the Executive Order do not apply to this rule.

C. Executive Order 13045

Protection of Children from Environmental Health Risks and Safety Risks (62 FR 19885, April 23, 1997), applies to any rule that: (1) Is

determined to be ''economically significant'' as defined under Executive Order 12866, and (2) concerns an environmental health or safety risk that EPA has reason to believe may have a disproportionate effect on children. If the regulatory action meets both criteria, the Agency must evaluate the environmental health or safety effects of the planned rule on children, and explain why the planned regulation is preferable to other potentially effective and reasonably feasible alternatives considered by the Agency.

This rule is not subject to Executive Order 13045 because it does not involve decisions intended to mitigate environmental health or safety risks.

D. Executive Order 13084

Under Executive Order 13084, Consultation and Coordination with Indian Tribal Governments, EPA may not issue a regulation that is not required by statute, that significantly affects or uniquely affects the communities of Indian tribal governments, and that imposes substantial direct compliance costs on those communities, unless the Federal government provides the funds necessary to pay the direct compliance costs incurred by the tribal governments. If the mandate is unfunded, EPA must provide to the Office of Management and Budget, in a separately identified section of the preamble to the rule, a description of the extent of EPA's prior consultation with representatives of affected tribal governments, a summary of the nature of their concerns, and a statement supporting the need to issue the regulation.

In addition, Executive Order 13084 requires EPA to develop an effective process permitting elected and other representatives of Indian tribal governments ''to provide meaningful and timely input in the development of regulatory policies on matters that significantly or uniquely affect their communities.'' Today's rule does not significantly or uniquely affect the communities of Indian tribal governments. Accordingly, the requirements of section 3(b) of Executive Order 13084 do not apply to this rule.

E. Regulatory Flexibility Act

The Regulatory Flexibility Act (RFA) generally requires an agency to conduct a regulatory flexibility analysis of any rule subject to notice and comment rulemaking requirements unless the agency certifies that the rule will not have a significant economic impact on a substantial number of small entities. Small entities include small businesses, small not-for-profit enterprises, and small governmental jurisdictions.

This final rule will not have a significant impact on a substantial number of small entities because SIP approvals under section 110 and subchapter I, part D of the Clean Air Act do not create any new requirements but simply approve requirements that the State is already imposing. Therefore, because the Federal SIP approval does not create any new requirements, I certify that this action will not have a significant economic impact on a substantial number of small entities.

Moreover, due to the nature of the Federal-State relationship under the Clean Air Act, preparation of flexibility analysis would constitute Federal inquiry into the economic reasonableness of state action. The Clean Air Act forbids EPA to base its actions concerning SIPs on such grounds. *Union Electric Co.,* v. *U.S. EPA,* 427 U.S. 246, 255–66 (1976); 42 U.S.C. 7410(a)(2).

F. Unfunded Mandates

Under section 202 of the Unfunded Mandates Reform Act of 1995 (''Unfunded Mandates Act''), signed into law on March 22, 1995, EPA must prepare a budgetary impact statement to accompany any proposed or final rule that includes a Federal mandate that may result in estimated annual costs to State, local, or tribal governments in the aggregate; or to private sector, of $100 million or more. Under section 205, EPA must select the most cost-effective and least burdensome alternative that achieves the objectives of the rule and is consistent with statutory requirements. Section 203 requires EPA to establish a plan for informing and advising any small governments that may be significantly or uniquely impacted by the rule.

EPA has determined that the approval action promulgated does not include a Federal mandate that may result in estimated annual costs of $100 million or more to either State, local, or tribal governments in the aggregate, or to the private sector. This Federal action approves pre-existing requirements under State or local law, and imposes no new requirements. Accordingly, no additional costs to State, local, or tribal governments, or to the private sector, result from this action.

G. Submission to Congress and the Comptroller General

The Congressional Review Act, 5 U.S.C. 801 *et seq.*, as added by the Small Business Regulatory Enforcement Fairness Act of 1996, generally provides that before a rule may take effect, the agency promulgating the rule must submit a rule report, which includes a copy of the rule, to each House of the Congress and to the Comptroller General of the United States. EPA will submit a report containing this rule and other required information to the U.S. Senate, the U.S. House of Representatives, and the Comptroller General of the United States prior to publication of the rule in the **Federal Register**. A major rule cannot take effect until 60 days after it is published in the **Federal Register**. This rule is not a ''major'' rule as defined by 5 U.S.C. 804(2).

H. National Technology Transfer and Advancement Act

Section 12 of the National Technology Transfer and Advancement Act (NTTAA) of 1995 requires Federal agencies to evaluate existing technical standards when developing a new regulation. To comply with NTTAA, EPA must consider and use ''voluntary consensus standards'' (VCS) if available and applicable when developing programs and policies unless doing so would be inconsistent with applicable law or otherwise impractical.

The EPA believes that VCS are inapplicable to this action. Today's action does not require the public to perform activities conducive to the use of VCS.

I. Petitions for Judicial Review

Under section 307(b)(1) of the Clean Air Act, petitions for judicial review of this action must be filed in the United States Court of Appeals for the appropriate circuit by April 3, 2000. Filing a petition for reconsideration by the Administrator of this final rule does not affect the finality of this rule for the purposes of judicial review nor does it extend the time within which a petition for judicial review may be filed, and shall not postpone the effectiveness of such rule or action. This action may not be challenged later in proceedings to enforce its requirements. (See section 307(b)(2).)

List of Subjects in 40 CFR Part 52

Environmental protection, Air pollution control, Hydrocarbons, Incorporation by reference, Intergovernmental relations, Ozone, Reporting and recordkeeping requirements.

Dated: January 10, 2000.

Felicia Marcus,

Regional Administrator, Region IX.

Part 52, Chapter I, Title 40 of the Code of Federal Regulations is amended as follows:

PART 52—[AMENDED]

1. The authority citation for Part 52 continues to read as follows:

Authority: 42 U.S.C. 7401 *et seq.*

Subpart F—California

2. Section 52.220 is amended by adding paragraph (c)(231)(i)(B)(*7*) to read as follows:

§ 52.220 Identification of plan.

* * * * *

(c) * * *

(231) * * *

(i) * * *

(B) * * *

(*7*) Rules 413 adopted on April 18, 1972 and Rule 414.1 adopted on January 9, 1979, both amended on March 7, 1996.

* * * * *

[FR Doc. 00–2171 Filed 2–2–00; 8:45 am]

BILLING CODE 6560–50–P

ENVIRONMENTAL PROTECTION AGENCY

40 CFR Part 52

[CA 234–0l87a; FRL–6529–6]

Approval and Promulgation of Implementation Plans; California State Implementation Plan Revision, Kern County, San Diego County, San Joaquin Valley Unified County Air Pollution Control Districts and South Coast Air Quality Management Districts

AGENCY: Environmental Protection Agency (EPA).

ACTION: Direct final rule.

SUMMARY: EPA is taking direct final action on revisions to the California State Implementation Plan. The revisions concern rules from the Kern County Air Pollution Control District (KCAPCD), San Diego County Air Pollution Control District (SDCAPCD), San Joaquin Valley Unified Air Pollution Control District (SJVUAPCD), and South Coast Air Quality Management District (SCAQMD). This approval action will incorporate these revisions into the federally approved SIP. The intended effect of approving these revisions is to regulate emissions of volatile organic compounds (VOCs) in accordance with the requirements of the Clean Air Act, as amended in 1990 (CAA or the Act). Thus, EPA is finalizing the approval of these revisions into the California SIP under provisions of the CAA regarding EPA action on SIP submittals, SIPs for national primary and secondary ambient air quality standards and plan requirements for nonattainment areas.

DATES: This rule is effective on April 3, 2000 without further notice, unless EPA receives adverse comments by March 6, 2000. If EPA receives such comment, it will publish a timely withdrawal in the **Federal Register** informing the public that this rule will not take effect.

ADDRESSES: Comments must be submitted to Andrew Steckel at Region IX office listed below. Copies of the rule, along with EPA's evaluation report for each rule are available for public inspection at EPA's Region IX office during normal business hours. Copies of the submitted rule revisions are also available for inspection at the following locations:

Rulemaking Office (AIR–4), Air Division, U.S. Environmental Protection Agency, Region IX, 75 Hawthorne Street, San Francisco, CA 94105

Environmental Protection Agency, Air Docket (6102), 401 ''M'' Street, S.W., Washington, D.C. 20460

California Air Resources Board, Stationary Source Division, Rule Evaluation Section, 2020 ''L'' Street, Sacramento, CA 95812

Kern County Air Pollution Control District Southeast Desert, 2700 ''M'' Street, Suite 302, Bakersfield, CA 93301–2370

San Diego County Air Pollution Control District, 9150 Chesapeake Dr., San Diego, CA 92123–1096

San Joaquin Valley Unified Air Pollution Control District, 1990 E. Gettysburg, Fresno, CA 93726

South Coast Air Quality Management District, 21865 E. Copley Dr., Diamond Bar, CA 91765–4182

FOR FURTHER INFORMATION CONTACT: Cynthia G. Allen, Rulemaking Office, AIR–4, Air Division, U.S. Environmental Protection Agency, Region IX, 75 Hawthorne Street, San Francisco, CA 94105, Telephone: (415) 744–1189.

SUPPLEMENTARY INFORMATION:

I. Applicability

The rules being approved into the California SIP include: KCAPCD Rule 102, Definitions; SDCAPCD Rule 2, Definitions; SJVUAPCD Rule 1020, Definitions; and SCAQMD Rule 102, Definitions Terms. In addition, SDCAPCD Rule 3, Standard Conditions, is being rescinded. The revisions were adopted by KCAPCD on July 1, 1999; SDCAPCD on June 30, 1999; SJVUAPCD on June 17, 1999; and SCAQMD on April 9, 1999. These rules were submitted by the California Air Resources Board to EPA on September 7, 1999.

II. Background

On March 3, 1978, EPA promulgated a list of ozone nonattainment areas under the provisions of the Clean Air Act, as amended in 1977 (1977 Act or pre-amended Act), that included the KCAPCD, SDCAPCD, SJVUAPCD, and SCAQMD. 43 FR 8964, 40 CFR 81.305. In response to section 110 (a) of the Act and other requirements, KCAPCD, SDCAPCD, SJVUAPCD, and SCAQMD submitted many rules which EPA approved into the SIP.

On February 7, 1996 (61 FR 4588) EPA published a final rule excluding perchloroethylene from the definition of VOC. On April 9, 1998 (63 FR 17331) EPA published a final rule excluding methyl acetate from the definition of VOC. These compounds were determined to have negligible photochemical reactivity and, thus, were added to the Agency's list of Exempt Compounds.

This document addresses EPA's direct-final action for KCAPCD Rule 102, Definitions; SDCAPCD Rule 2, Definitions and Rule 3, Standard Conditions; SJVUAPCD Rule 1020, Definitions; and SCAQMD Rule 102. The revised rules were adopted by KCAPCD on July 1, 1999; SDCAPCD on June 30, 1999; SJVUAPCD on December 17, 1992, and SCAQMD on April 9, 1999. These rules were submitted by the California Air Resources Board to EPA on September 7, 1999. These rules were found to be complete on October 20, 1999, pursuant to EPA's completeness criteria that are set forth in 40 CFR part 51, appendix V [1] and is being finalized for approval into the SIP.

The following are EPA's summary and final action for these rules:

III. EPA Evaluation and Action

In determining the approvability of a VOC rule, EPA must evaluate the rule for consistency with the requirements of the CAA and EPA regulations, as found in section 110 and part D of the CAA and 40 CFR part 51 (Requirements for Preparation, Adoption, and Submittal of Implementation Plans). The EPA interpretation of these requirements, which forms the basis for today's action, appears in the various EPA policy guidance documents. [2]

---

[1] EPA adopted the completeness criteria on February 16, 1990 (55 FR 5830) and, pursuant to section 110(k)(1)(A) of the CAA, revised the criteria on August 26, 1991 (56 FR 42216).

[2] Among other things, the pre-amendment guidance consists of those portions of the proposed post-1987 ozone and carbon monoxide policy that concern RACT, 52 FR 45044 (November 24, 1987); ''Issues relating to VOC Regulation Cutpoints, Deficiencies, and Deviations, Clarification to Appendix D of November 24, 1987 **Federal Register**

This action is necessary to make the VOC definition in KCAPCD, SDCAPCD, SJVUAPCD, and SCAQMD rules consistent with federal and state definitions of VOC. This action will result in more accurate assessment of ozone formation potential, will remove unnecessary control requirements and will assist States in avoiding exceedances of the ozone health standard by focusing control efforts on compounds which are actual ozone precursors.

KCAPCD Rule 102, Definitions, has been revised to add methyl acetate and perchloroethylene to the definition of exempt Volatile Organic Compounds. In addition, this revision deletes the following definitions, which are no longer used: Alteration, Dusts, Institutional Facility, Loading Rack, and Section.

SDCAPCD Rule 2, Definitions, has been revised to add methyl acetate to the definition of exempt Volatile Organic Compounds. In addition, this revision adds the following new definitions: 12-Month Period, Facility, Military Tactical Support Equipment, PM–2.5, Permit to Operate, and Registration. This revision deletes the following definitions, which are no longer used: Process Weight and Process Weight Per Hour.

SDCAPCD Rule 3, Standard Conditions, is being rescinded because it contains a definition of Standard Conditions which is now included in Rule 2, Definitions.

SJVUAPCD Rule 1020, Definitions, has been revised to add methyl acetate to the definition of exempt Volatile Organic Compounds and to make clarification changes to the definition of ''Clean Produced Water'' in section 3.10.

SCAQMD Rule 102, Definition of Terms, has been revised to add methyl acetate to the definition of exempt Volatile Organic Compounds.

EPA has evaluated the submitted rules and has determined that they are consistent with the CAA, EPA regulations, and EPA policy. Therefore, KCAPCD Rule 102, Definitions, SDCAPCD Rule 2, Definitions and recision of Rule 3, Standard Conditions, SJVUAPCD Rule 1020, Definitions, and SCAQMD Rule 102, Definition of Terms, are being approved under section 110(k)(3) of the CAA as meeting the requirements of section 110(a) and part D.

EPA is publishing this rule without prior proposal because the Agency views this as a noncontroversial amendment and anticipates no adverse comments. However, in the proposed rules section of this **Federal Register** publication, EPA is publishing a separate document that will serve as the proposal to approve the SIP revision should adverse comments be filed. This rule will be effective April 3, 2000 without further notice unless the Agency receives adverse comments by March 6, 2000.

If the EPA receives such comments, then EPA will publish a timely withdrawal in the **Federal Register** informing the public that the rule will not take effect. All public comments received will then be addressed in a subsequent final rule based on the proposed rule. The EPA will not institute a second comment period. Any parties interested in commenting on this rule should do so at this time. If no such comments are received, the public is advised that this rule is effective on April 3, 2000 and no further action will be taken on the proposed rule.

IV. Administrative Requirements

A. Executive Order 12866

The Office of Management and Budget (OMB) has exempted this regulatory action from Executive Order 12866, Regulatory Planning and Review.

B. Executive Order 12875

Under Executive Order 12875, Enhancing the Intergovernmental Partnership, EPA may not issue a regulation that is not required by statute and that creates a mandate upon a State, local or tribal government, unless the Federal government provides the funds necessary to pay the direct compliance costs incurred by those governments, or EPA consults with those governments. If EPA complies by consulting, Executive Order 12875 requires EPA to provide to the Office of Management and Budget a description of the extent of EPA's prior consultation with representatives of affected State, local and tribal governments, the nature of their concerns, copies of any written communications from the governments, and a statement supporting the need to issue the regulation. In addition, Executive Order 12875 requires EPA to develop an effective process permitting elected officials and other representatives of State, local and tribal governments ''to provide meaningful and timely input in the development of regulatory proposals containing significant unfunded mandates.'' Today's rule does not create a mandate on State, local or tribal governments. The rule does not impose any enforceable duties on these entities. Accordingly, the requirements of section 1(a) of Executive Order 12875 do not apply to this rule.

C. Executive Order 13045

Protection of Children from Environmental Health Risks and Safety Risks (62 FR 19885, April 23, 1997), applies to any rule that: (1) is determined to be ''economically significant'' as defined under Executive Order 12866, and (2) concerns an environmental health or safety risk that EPA has reason to believe may have a disproportionate effect on children. If the regulatory action meets both criteria, the Agency must evaluate the environmental health or safety effects of the planned rule on children, and explain why the planned regulation is preferable to other potentially effective and reasonably feasible alternatives considered by the Agency. This rule is not subject to Executive Order 13045 because it is does not involve decisions intended to mitigate environmental health or safety risks.

D. Executive Order 13084

Under Executive Order 13084, Consultation and Coordination with Indian Tribal Governments, EPA may not issue a regulation that is not required by statute, that significantly or uniquely affects the communities of Indian tribal governments, and that imposes substantial direct compliance costs on those communities, unless the Federal government provides the funds necessary to pay the direct compliance costs incurred by the tribal governments, or EPA consults with those governments. If EPA complies by consulting, Executive Order 13084 requires EPA to provide to the Office of Management and Budget, in a separately identified section of the preamble to the rule, a description of the extent of EPA's prior consultation with representatives of affected tribal governments, a summary of the nature of their concerns, and a statement supporting the need to issue the regulation. In addition, Executive Order 13084 requires EPA to develop an effective process permitting elected officials and other representatives of Indian tribal governments ''to provide meaningful and timely input in the development of regulatory policies on matters that significantly or uniquely affect their communities.'' Today's rule does not significantly or uniquely affect the communities of Indian tribal governments. Accordingly, the requirements of section 3(b) of Executive Order 13084 do not apply to this rule.

---

document'' (Blue Book)(notice of availability was published in the **Federal Register** on May 25, 1988).

E. Regulatory Flexibility Act

The Regulatory Flexibility Act (RFA) generally requires an agency to conduct a regulatory flexibility analysis of any rule subject to notice and comment rulemaking requirements unless the agency certifies that the rule will not have a significant economic impact on a substantial number of small entities. Small entities include small businesses, small not-for-profit enterprises, and small governmental jurisdictions. This final rule will not have a significant impact on a substantial number of small entities because SIP approvals under section 110 and subchapter I, part D of the Clean Air Act do not create any new requirements but simply approve requirements that the State is already imposing. Therefore, because the Federal SIP approval does not create any new requirements, I certify that this action will not have a significant economic impact on a substantial number of small entities. Moreover, due to the nature of the Federal-State relationship under the Clean Air Act, preparation of flexibility analysis would constitute Federal inquiry into the economic reasonableness of state action. The Clean Air Act forbids EPA to base its actions concerning SIPs on such grounds. *Union Electric Co.,* v. *U.S. EPA,* 427 U.S. 246, 255–66 (1976); 42 U.S.C. 7410(a)(2).

F. Unfunded Mandates

Under section 202 of the Unfunded Mandates Reform Act of 1995 (''Unfunded Mandates Act''), signed into law on March 22, 1995, EPA must prepare a budgetary impact statement to accompany any proposed or final rule that includes a Federal mandate that may result in estimated annual costs to State, local, or tribal governments in the aggregate; or to private sector, of $100 million or more. Under section 205, EPA must select the most cost-effective and least burdensome alternative that achieves the objectives of the rule and is consistent with statutory requirements. Section 203 requires EPA to establish a plan for informing and advising any small governments that may be significantly or uniquely impacted by the rule.

EPA has determined that the approval action promulgated does not include a Federal mandate that may result in estimated annual costs of $100 million or more to either State, local, or tribal governments in the aggregate, or to the private sector. This Federal action approves pre-existing requirements under State or local law, and imposes no new requirements. Accordingly, no additional costs to State, local, or tribal governments, or to the private sector, result from this action.

G. Submission to Congress and the Comptroller General

The Congressional Review Act, 5 U.S.C. 801 *et seq.*, as added by the Small Business Regulatory Enforcement Fairness Act of 1996, generally provides that before a rule may take effect, the agency promulgating the rule must submit a rule report, which includes a copy of the rule, to each House of the Congress and to the Comptroller General of the United States. EPA will submit a report containing this rule and other required information to the U.S. Senate, the U.S. House of Representatives, and the Comptroller General of the United States prior to publication of the rule in the **Federal Register**. This rule is not a ''major'' rule as defined by 5 U.S.C. 804(2).

H. Petitions for Judicial Review

Under section 307(b)(1) of the Clean Air Act, petitions for judicial review of this action must be filed in the United States Court of Appeals for the appropriate circuit by April 3, 2000. Filing a petition for reconsideration by the Administrator of this final rule does not affect the finality of this rule for the purposes of judicial review nor does it extend the time within which a petition for judicial review may be filed, and shall not postpone the effectiveness of such rule or action. This action may not be challenged later in proceedings to enforce its requirements. (See section 307(b)(2).)

List of Subjects in 40 CFR Part 52

Environmental protection, Air pollution control, Hydrocarbons, Incorporation by reference, Intergovernmental relations, Ozone, Reporting and recordkeeping requirements, Volatile organic compounds.

Dated: January 10, 2000.

Felicia Marcus,

Regional Administrator, Region IX.

Part 52, Chapter I, Title 40 of the Code of Federal Regulations is amended as follows:

PART 52 —[AMENDED]

1. The authority citation for Part 52 continues to read as follows:

Authority: 42 U.S.C. 7401 *et seq.*

Subpart F—California

2. Section 52.220 is amended by revising paragraph (c)(41)(ii) introductory text, and by adding paragraph (c)(41)(ii)(E) and (c)(269) to read as follows:

§ 52.220 Identification of plan.

* * * * *

(c) * * *

(41) * * *

(ii) San Diego County Air Pollution Control District.

* * * * *

(E) Previously approved on August 31, 1978 and now deleted without replacement Rule 3.

* * * * *

(269) New and amended regulations for the following APCDs were submitted on September 7, 1999, by the Governor's designee.

(i) Incorporation by reference.

(A) Kern County Air Pollution Control District.

(*1*) Rule 102, adopted on April 18, 1972 and amended on July 1, 1999.

(B) San Diego County Air Pollution Control District.

(*1*) Rule 2, adopted on June 30, 1999.

(C) San Joaquin Valley Unified Air Pollution Control District.

(*1*) Rule 1020, adopted on June 18, 1992 and amended on June 17, 1999.

(D) South Coast Air Quality Management District.

(*1*) Rule 102, adopted on February 4, 1997 and amended on April 9, 1999.

* * * * *

[FR Doc. 00–2169 Filed 2–2–00; 8:45 am]

BILLING CODE 6560–50–P

ENVIRONMENTAL PROTECTION AGENCY

40 CFR Part 52

[SD–001–0007a & SD–001–0008a; FRL–6527–2]

Clean Air Act Approval and Promulgation of State Implementation Plan; South Dakota; Revisions to Performance Testing Regulation

AGENCY: Environmental Protection Agency (EPA).

ACTION: Direct final rule.

SUMMARY: The EPA approves revisions to the South Dakota State implementation plan (SIP) submitted on May 2, 1997 and May 6, 1999 regarding the testing of new fuels or raw materials. Specifically, the State adopted a new provision in Chapter 74:36:11, Performance Testing, of the Administrative Rules of South Dakota (ARSD) that allows permitted sources to request permission to test a new fuel or raw material, to determine if it is compatible with existing equipment and to determine air emission rates, before

requesting a permit amendment or modification. The State will grant approval for such testing of a new fuel or raw material if certain conditions in the State's regulation are met. The State's regulation provides, among other things, that the State will not approve a test if the test would cause or contribute to a violation of a national ambient air quality standard (NAAQS). EPA approves these revisions regarding testing of new fuels or raw materials because the revisions are consistent with the requirements of the Clean Air Act (Act) and applicable Federal regulations.

DATES: This rule is effective on April 3, 2000 without further notice, unless EPA receives adverse comment by March 6, 2000. If adverse comment is received, EPA will publish a timely withdrawal of the direct final rule in the **Federal Register** informing the public that the rule will not take effect.

ADDRESSES: Written comments may be mailed to Richard R. Long, Director, Air and Radiation Program, Mailcode 8P-AR, Environmental Protection Agency (EPA), Region VIII, 999 18th Street, Suite 500, Denver, Colorado, 80202. Copies of the documents relative to this action are available for inspection during normal business hours at the Air and Radiation Program, Environmental Protection Agency, Region VIII, 999 18th Street, Suite 500, Denver, Colorado 80202–2466. Copies of the Incorporation by Reference material are available at the Air and Radiation Docket and Information Center, Environmental Protection Agency, 401 M Street, SW, Washington, DC 20460. Copies of the State documents relevant to this action are available for public inspection at the Air Quality Program, Department of Environment and Natural Resources, Joe Foss Building, 523 East Capitol, Pierre, South Dakota 57501.

FOR FURTHER INFORMATION CONTACT: Vicki Stamper, EPA Region VIII, (303) 312–6445.

SUPPLEMENTARY INFORMATION:

I. What Action Is EPA Taking Today?

EPA approves a provision in Chapter 74:36:11 of the ARSD, Performance Testing, that allows permitted sources to request permission to test a new fuel or raw material, to determine if it is compatible with existing equipment and to determine air emission rates, before requesting a permit amendment or modification. The State originally submitted this provision in section 74:36:11:04 of the ARSD on May 2, 1997. The State submitted revisions to this provision on May 6, 1999. EPA approves this provision, as revised, because it is consistent with applicable Federal regulations and the Act.

The State's May 2, 1997 and May 6, 1999 SIP submittals included revisions to other chapters of the ARSD. We acted on most of those revisions submitted on May 2, 1997 in an October 19, 1998 rulemaking (see 63 FR 55804–55807). In this document, we only act on the revisions to ARSD 74:36:11:04. We will act on the revisions to the other chapters of the ARSD included in these two submittals in separate rulemakings.

II. How Did South Dakota Revise Its SIP Regarding Testing of New Fuels or Raw Materials?

In South Dakota's May 2, 1997 SIP submittal, the State submitted revisions to its Performance Testing requirements in Chapter 74:36:11. Specifically, ARSD 74:36:11:04 allows a source to request permission from the State to test a new fuel or raw material to determine if it is compatible with existing equipment, before requesting a permit modification or permit amendment to use the new fuel or raw material. The version of ARSD 74:36:11:04 submitted on May 2, 1997 requires the State's approval prior to a source beginning to test a new fuel or raw material; the State's approval will specify the schedule for the testing and will outline requirements which may include performance testing, visible emissions evaluation, fuel analysis, dispersion modeling, and monitoring of raw material or fuel rates. If the State determines that the use of the new fuel or raw material will increase emissions, the State will give public notice of the proposed testing and take public comment for thirty days. The State will consider any comments received prior to making a final decision on whether to allow the source to test a new fuel or raw material.

EPA had some concerns with ARSD 74:36:11:04 as originally submitted. Specifically, we were concerned that this provision might allow a source testing a new fuel or raw material to violate the NAAQS. EPA cannot approve any provision in the SIP unless it will assure attainment and maintenance of the NAAQS. Further, we were concerned that there was no time limit specified in the rule to define how long a source could test a new fuel or raw material before obtaining a revision to its permit.

Consequently, the State revised ARSD 74:36:11:04 to address our concerns and submitted those revisions for approval as part of the SIP on May 6, 1999. Specifically, a provision was added that the State will not approve a test if the test would cause or contribute to a violation of a NAAQS. In addition, the State added a provision stating that, in most cases, the owner or operator will be allowed to test for a maximum of one week. Any request for a period longer than one week will require additional justification. In any case, the revised rule provides that a test period shall not exceed 180 days. The revised rule also clarifies that the purpose of the testing of the new fuel or raw material is to determine air emission rates, as well as to determine compatibility with existing equipment.

III. Why Is EPA Approving These SIP Revisions?

EPA finds that ARSD 74:36:11:04, as revised, is consistent with the applicable requirements of the Act and Federal regulations. The State's rule, as revised, will not allow testing of a new fuel or raw material if the test would cause or contribute to a violation of the NAAQS. The duration of time that a source is allowed to test a new fuel or material is generally limited to one week but, in any case, cannot exceed 180 days. EPA believes that these provisions ensure that this rule is consistent with section 110 of the Act and with the applicable permitting requirements at 40 CFR part 51, subpart I. Further, the public will have the chance to submit comments prior to the State determining whether to approve the test, if the use of the fuel or raw material will result in an increase of emissions of any pollutant.

We also believe that the State has met EPA's completeness criteria, including the public participation requirements of sections 110(a)(2) and 110(l) of the Clean Air Act, for the adoption of these revisions to ARSD 74:36:11:04. Specifically, the State of South Dakota held a public hearing on November 20, 1996, after providing notice to the public, for the revisions to ARSD 74:36:11:04 submitted to EPA on May 2, 1997. For the SIP revision submitted on May 6, 1999, the State held a public hearing on February 18, 1999 after providing notice to the public.

EPA would like to provide our interpretation of how ARSD 74:36:11:04 relates to the prevention of significant deterioration (PSD) permitting regulations (which South Dakota adopted by reference in ARSD 74:36:09). Specifically, in defining what constitutes a major modification subject to review under the PSD permitting regulations, EPA's regulations provide that the use of an alternative fuel or raw material that the source was capable of accommodating before January 6, 1975 is not considered to be a physical change or a change of method in operation, unless the use of such

alternative fuel would be prohibited under any Federally enforceable permit condition. See 40 CFR 52.21(b)(2)(iii)(e)(1). In order for such a change in fuel or material usage to be exempt from permitting, the source must have been designed and constructed to accommodate the alternative fuel or raw material prior to January 6, 1975, and the source must have been continuously capable of accommodating the alternative fuel or raw material since before January 6, 1975. Sources requesting to test a new fuel or raw material under ARSD 74:36:11:04 to determine compatibility with existing equipment would appear not to know whether the facility is capable of accommodating the new fuel or material. Thus, the testing of a new fuel or raw material pursuant to ARSD 74:36:11:04 would not likely qualify as exempt from consideration as a physical change or change in the method of operation under 40 CFR 52.21(b)(2)(iii)(e)(1). EPA has provided this clarification to ensure there is no confusion with respect to the relationship between ARSD 74:36:11:04 and this PSD provision.

IV. What Are the Administrative Requirements Associated With This Action?

Under Executive Order 12866 (58 FR 51735, October 4, 1993), this action is not a ''significant regulatory action'' and therefore is not subject to review by the Office of Management and Budget. This action merely approves state law as meeting federal requirements and imposes no additional requirements beyond those imposed by state law. Accordingly, the Administrator certifies that this rule will not have a significant economic impact on a substantial number of small entities under the Regulatory Flexibility Act (5 U.S.C. 601 *et seq.*). Because this rule approves pre-existing requirements under state law and does not impose any additional enforceable duty beyond that required by state law, it does not contain any unfunded mandate or significantly or uniquely affect small governments, as described in the Unfunded Mandates Reform Act of 1995 (Pub. L. 104–4). For the same reason, this rule also does not significantly or uniquely affect the communities of tribal governments, as specified by Executive Order 13084 (63 FR 27655, May 10, 1998). This rule will not have substantial direct effects on the States, on the relationship between the national government and the States, or on the distribution of power and responsibilities among the various levels of government, as specified in Executive Order 13132 (64 FR 43255, August 10, 1999), because it merely approves a state rule implementing a federal standard, and does not alter the relationship or the distribution of power and responsibilities established in the Clean Air Act. This rule also is not subject to Executive Order 13045 (62 FR 19885, April 23, 1997), because it is not economically significant.

In reviewing SIP submissions, EPA's role is to approve state choices, provided that they meet the criteria of the Clean Air Act. In this context, in the absence of a prior existing requirement for the State to use voluntary consensus standards (VCS), EPA has no authority to disapprove a SIP submission for failure to use VCS. It would thus be inconsistent with applicable law for EPA, when it reviews a SIP submission, to use VCS in place of a SIP submission that otherwise satisfies the provisions of the Clean Air Act. Thus, the requirements of section 12(d) of the National Technology Transfer and Advancement Act of 1995 (15 U.S.C. 272 note) do not apply. As required by section 3 of Executive Order 12988 (61 FR 4729, February 7, 1996), in issuing this rule, EPA has taken the necessary steps to eliminate drafting errors and ambiguity, minimize potential litigation, and provide a clear legal standard for affected conduct. EPA has complied with Executive Order 12630 (53 FR 8859, March 15, 1988) by examining the takings implications of the rule in accordance with the ''Attorney General's Supplemental Guidelines for the Evaluation of Risk and Avoidance of Unanticipated Takings'' issued under the executive order. This rule does not impose an information collection burden under the provisions of the Paperwork Reduction Act of 1995 (44 U.S.C. 3501 *et seq.*).

The Congressional Review Act, 5 U.S.C. 801 *et seq.*, as added by the Small Business Regulatory Enforcement Fairness Act of 1996, generally provides that before a rule may take effect, the agency promulgating the rule must submit a rule report, which includes a copy of the rule, to each House of the Congress and to the Comptroller General of the United States. EPA will submit a report containing this rule and other required information to the U.S. Senate, the U.S. House of Representatives, and the Comptroller General of the United States prior to publication of the rule in the **Federal Register**. A major rule cannot take effect until 60 days after it is published in the **Federal Register**. This action is not a ''major rule'' as defined by 5 U.S.C. 804(2). This rule will be effective April 3, 2000.

Under section 307(b)(1) of the Clean Air Act, petitions for judicial review of this action must be filed in the United States Court of Appeals for the appropriate circuit by April 3, 2000. Filing a petition for reconsideration by the Administrator of this final rule does not affect the finality of this rule for the purposes of judicial review nor does it extend the time within which a petition for judicial review may be filed, and shall not postpone the effectiveness of such rule or action. This action may not be challenged later in proceedings to enforce its requirements. (See section 307(b)(2).)

List of Subjects in 40 CFR Part 52

Environmental protection, Air pollution control, Incorporation by reference, Intergovernmental relations, Particulate matter, Reporting and recordkeeping requirements, Sulfur oxides.

Dated: January 6, 2000.

Jack W. McGraw,

Acting Regional Administrator, Region VIII.

Part 52, Chapter I, title 40 of the Code of Federal Regulations is amended as follows:

PART 52—[AMENDED]

1. The authority citation for part 52 continues to read as follows:

Authority: 42 U.S.C. 7401 *et seq.*

Subpart QQ—South Dakota

2. Section 52.2170 is amended by adding paragraph (c)(19) to read as follows:

§ 52.2170 Identification of plan.

* * * * *

(c) * * *

(19) On May 2, 1997 and on May 6, 1999, the designee of the Governor of South Dakota submitted provisions in Section 74:36:11:04 of the Administrative Rules of South Dakota. The provisions allow permitted sources to request permission to test a new fuel or raw material, to determine if it is compatible with existing equipment and to determine air emission rates, before requesting a permit amendment or modification if certain conditions are met.

(i) Incorporation by reference.

(A) Revisions to the Administrative Rules of South Dakota, Air Pollution Control Program, Chapter 74:36:11, Performance Testing, section 74:36:11:04, effective April 4, 1999.

[FR Doc. 00–2167 Filed 2–2–00; 8:45 am]

BILLING CODE 6560–50–P

FEDERAL COMMUNICATIONS COMMISSION

47 CFR Chapter 1

[CC Docket No. 96–152, FCC 99–332]

Telemessaging, Electronic Publishing, and Alarm Monitoring Services

AGENCY: Federal Communications Commission.

ACTION: Final rule; denial of petition or reconsideration.

SUMMARY: This document declines to reconsider the Commission's Telemessaging and Electronic Publishing Order, declines to adopt rule pursuant to the Further Notice, and clarifies several points concerning telemessaging and electronic publishing. The intended effect is to promote the pro-competitive and deregulatory objectives of the Telecommunications Act of 1996.

EFFECTIVE DATE: March 6, 2000.

FOR FURTHER INFORMATION CONTACT: William Kehoe, Attorney, Common Carrier Bureau, Policy and Program Planning Division, (202) 418–1580. Further information may also be obtained by calling the Common Carrier Bureau's TTY number: 202–418–0484.

SUPPLEMENTARY INFORMATION: This is a summary of the Commission's Order On Reconsideration adopted November 3, 1999, and released November 9, 1999. The full text of this Order is available for inspection and copying during normal business hours in the FCC Reference Center, 445 12th Street, SW, Room CY–A257, Washington, DC. The complete text also may be obtained through the World Wide Web, at *http://www.fcc.gov/Bureaus/CommonCarrier/Orders/fcc99–332.wp,* or may be purchased from the Commission's copy contractor, International Transcription Services, Inc. (202) 857–3800, 1231 20th Street, NW, Washington, DC 20036.

Regulatory Flexibility Certification

No comments were submitted in response to the Commission's request for comment on its certification. In this present *Order on Reconsideration,* the Commission promulgates no additional final rules, and our action does not affect the previous analysis.

Synopsis of Order on Reconsideration

1. In this Order, we address a petition for reconsideration or clarification of the Alarm Monitoring Order, CC Docket No. 96–152, FCC 99–241, 64 FR 52464 (09/29/99), filed by Southwestern Bell Telephone Company (SBC).

2. As part of its determination regarding the scope of the term ''alarm monitoring service,'' the Commission enunciated the test it would use in assessing whether a BOC was ''engaged in the provision of'' alarm monitoring service in violation of section 275(a), which states that ''No Bell Operating Company or affiliate thereof shall engage in the provision of alarm monitoring services before the date which is 5 years after the date of enactment of the Telecommunications Act of 1996.'' 47 U.S.C. 275(a). As an initial matter, the Commission determined that the prohibition on the provision of alarm monitoring services did not ''flatly prohibit BOCs from entering into arrangements to act as sales agents on behalf of alarm monitoring services providers.'' At the same time, however, the Commission recognized that there may be instances where a BOC is not directly providing alarm monitoring service, but the interests of the BOC and an alarm monitoring service provider are so intertwined that the BOC itself may be considered to be ''engag[ed] in the provision'' of alarm monitoring service. In making this assessment, the Commission concluded that it would ''examine sales agency and marketing arrangements between a BOC and an alarm monitoring company on a case-by-case basis to determine whether they constitute the 'provision' of alarm monitoring service.'' In evaluating such arrangements, the Commission determined that it would take into account a variety of factors, including whether the terms and conditions of a sales agency or marketing arrangement are made available to other alarm monitoring companies on a nondiscriminatory basis and the manner in which the BOC is being compensated for its services.

3. SBC filed a petition for reconsideration or clarification of the Commission's Alarm Monitoring Order. SBC states that the Alarm Monitoring Order did not articulate how a regulatory commitment to make a sales agency or marketing arrangement available on a nondiscriminatory basis ''was germane to the 'provision' analysis.'' SBC contends that, in assessing whether a BOC is providing alarm monitoring services in violation of section 275(a), the Commission need not, and should not, consider whether the terms and conditions of a BOC's sales agency or other marketing arrangement with a particular alarm monitoring service provider are available to other alarm monitoring service providers on a nondiscriminatory basis. SBC asserts, however, that if the Commission continues to find a BOC's relationship with other alarm monitoring service providers pertinent in determining whether a BOC is ''engag[ed] in the provision'' of alarm monitoring services, it should only consider whether the arrangement with a particular provider is non-exclusive, not whether it is available on a nondiscriminatory basis. According to SBC, ''such non-exclusivity would ensure that both the BOC and the provider would remain free to do business with others,'' and thus ''not 'intertwined' with one another * * *.''

4. In the alternative, if the Commission retains nondiscrimination as a factor in its analysis, SBC argues that the Commission should clarify that nondiscrimination is not an absolute requirement for an acceptable sales agency relationship. Rather, says SBC, the Commission should expressly affirm that nondiscrimination is not an outcome-determinative factor, but rather is only one of a multitude of factors that the Commission will consider in reviewing sales agency and other marketing arrangements. In SBC's view a BOC should be free to demonstrate that based on factors other than nondiscrimination ''it has a legitimate sales agency relationship with an alarm service provider without an undue 'intertwining' of interests.''

5. The Alarm Industry Communications Committee (AICC) filed an opposition to SBC's petition, arguing that the statute's outright ban on the BOC's provision of alarm monitoring services for a period of five years require, as both a statutory and policy matter, that any sales or other marketing arrangement be made available on a nondiscriminatory basis in order to restrain adequately the BOC's incentive and ability to enter into arrangements that constitute the provision of alarm monitoring services. As for SBC's alternative request, AICC argues that SBC should be told, ''clearly and simply,'' that it cannot discriminate among alarm monitoring providers in its provision of marketing or billing and collection services. AICC asserts that there are numerous legal and policy reasons to forbid discrimination and none in its favor.

6. As the Commission stated in the Alarm Monitoring Order, we must assess on a case-by-case basis whether a BOC's interests are so intertwined with an alarm monitoring service provider that the BOC itself may be considered to be ''engag[ed] in the provision'' of alarm monitoring service in violation of section 275(a). In making such an assessment, the Commission will consider a variety of factors to inform

our ultimate determination as to whether a BOC's sales agency or other marketing arrangement causes its interests to be so intertwined with the interests of a particular alarm monitoring service provider that the BOC itself may be considered to be ''engag[ed] in the provision'' of alarm monitoring service.

7. In this Order, we clarify our rationale for taking into account whether a BOC's sales agency or other marketing arrangement is available on a non-discriminatory basis in assessing whether the BOC is engaged in the ''provision'' or alarm monitoring service We strongly disagree with SBC that the availability of sales agency or other marketing arrangements on a nondiscriminatory basis has no relevance in determining whether a BOC is engaged in the provision of alarm monitoring services. While the Commission may consider a variety of other factors as well, the presence of sales agency or other marketing arrangements with multiple alarm monitoring service providers is an indication that the BOC's interests in such arrangements are limited only to the provision of the sales agency or marketing component of the service. Alternatively, to the extent that a BOC makes a sales agency or other marketing arrangement available to any alarm monitoring service provider on the same terms and conditions, such availability is evidence that the BOC's interests are independent of, and not intertwined with, a particular alarm monitoring service provider. Therefore, in the absence of actual sales agency or other marketing arrangements with multiple alarm monitoring service providers, a commitment to make such arrangements available on a nondiscriminatory basis would be evidence—to be considered along with other factors—that a BOC's interests are independent of, and distinct from, any particular alarm monitoring service provider. Accordingly, we do not disturb our previous finding that the availability of sales agency or other marketing arrangements on a nondiscriminatory basis is relevant to whether a BOC is engaged in the provision of alarm monitoring services.

I. Ordering Clauses

8. Pursuant to sections 1–4, 201–205, 214, 275, and 303(r) of the Communications Act of 1934, as amended, 47 U.S.C. 151–154, 201–205, 214, 275, 303(r), this Order on Reconsideration in CC Docket No. 96–152 is adopted.

9. The petition for reconsideration filed by Southwestern Bell Telephone Company is denied in its entirety, as described herein.

Federal Communications Commission.

Magalie Roman Salas,

Secretary.

[FR Doc. 00–2363 Filed 2–2–00; 8:45 am]

BILLING CODE 6712–01–M

DEPARTMENT OF THE INTERIOR

Fish and Wildlife Service

50 CFR Part 17

RIN 1018–AE82

Endangered and Threatened Wildlife and Plants; Determination of Endangered Status for the Plant Yreka Phlox from Siskiyou County, CA

AGENCY: Fish and Wildlife Service, Interior.

ACTION: Final rule.

SUMMARY: We, the U.S. Fish and Wildlife Service (Service), determine endangered status pursuant to the Endangered Species Act (Act) of 1973, as amended, for *Phlox hirsuta* (Yreka phlox). This perennial plant species is known only from two locations in Siskiyou County, California. A third location, near Etna Mills, California, has been searched, but no plants or habitats have been found since 1930. The primary threats to *P. hirsuta* include urbanization, inadequate State regulatory mechanisms, and extirpation from random events due to the small number of populations and limited range of the species. This rule implements the Federal protections and recovery provisions afforded by the Act for this plant.

DATES: Effective March 6, 2000.

ADDRESSES: The complete file for this rule is available for public inspection, by appointment, during normal business hours at the U.S. Fish and Wildlife Service, Sacramento Fish and Wildlife Office, 2800 Cottage Way, Suite W2605, Sacramento, California 95825–1846.

FOR FURTHER INFORMATION CONTACT: Kirsten Tarp or Jan Knight, Sacramento Fish and Wildlife Office (see **ADDRESSES** section) (telephone 916/414–6645; facsimile 916/414–6710).

SUPPLEMENTARY INFORMATION:

Background

Phlox hirsuta (Yreka phlox) is endemic to Siskiyou County, California, where it grows on serpentine slopes in the vicinity of the City of Yreka (California Native Plant Society (CNPS) 1985). Serpentine soils are rocky mineral soils consisting mostly of ultramafic rocks (rocks with unusually large amounts of magnesium and iron); the large amount of magnesium in the soil gives it a green mottled color. Ultramafic rocks are found discontinuously throughout California, in the Sierra Nevada and in the Coast Ranges from Santa Barbara County, California, to British Columbia. Soils produced from ultramafic rocks have characteristic physical and chemical properties, such as high concentrations of magnesium, chromium, and nickel, and low concentrations of calcium, nitrogen, potassium, and phosphorus. Serpentine soils alter the pattern of vegetation and plant species composition nearly everywhere they occur. While serpentine soils are inhospitable for the growth of most plants, some plants are wholly or largely restricted to serpentine substrates (Kruckeberg 1984).

Elias Nelson (1899) described *Phlox hirsuta* based on a collection made by Edward L. Greene in 1876 near Yreka, Siskiyou County, California. Willis L. Jepson (1943) reduced the species to varietal status, treating the taxon as *Phlox stansburyi* var. *hirsuta.* Edgar Wherry (1955) in his monograph of the genus *Phlox* and most recently Patterson and Wilken (1993) recognize this taxon as *Phlox hirsuta* E. E. Nelson.

Phlox hirsuta is a perennial subshrub in the phlox family (Polemoniaceae). The species grows 5 to 15 centimeters (cm) (2 to 5.9 inches (in)) high from a stout, woody base and is hairy throughout. Narrowly lanceolate to ovate leaves with glandular margins are crowded on the stem. The leaves are 1.5 to 3 cm (0.6 to 1.2 in) long and 4 to 7 millimeters (mm) (0.2 to 0.3 in) wide. Pink to purple flowers appear from April to June. The corollas (petals) of the flowers are 12 to 15 mm (0.5 to 0.6 in) long and are smooth-margined at the apex (tip) (CNPS 1977, 1985). The 5 to 8 mm (0.2 to 0.3 in) style (female reproductive organ in a plant) is contained within the corolla tube (tube formed by the flower petals) (CNPS 1977, 1985; Pattersen and Wilken 1993). Several other phlox species may occur within the range of *P. hirsuta.* Of these, *P. speciosa* (showy phlox) has notched petals and grows to 15 to 40 cm (5.9 to 15.8 in), considerably taller than *P. hirsuta. Phlox adsurgens* (northern phlox) is also larger than *P. hirsuta* growing to 15 to 30 cm (5.9 to 11.8 in). In addition, *P. adsurgens* blooms later (from June to August) than *P. hirsuta* and is glabrous (lacking hairs and glands) rather than hairy. Prostrate (lying flat on the ground) to decumbent (mostly lying on the ground but with

tips curving up) stems and herbage lacking glands separate *P. diffusa* (spreading phlox) from *P. hirsuta* (CNPS 1977, 1985). Although found at the same latitudes, *P. stansburyi* (Stansbury's phlox) occurs 112 kilometers (km) (70 miles (mi)) farther to the east in Lassen and Modoc Counties (CNPS 1977). *Phlox cespitosa* is glandular-hairy, has a matted growth habit, and is one of several species of phlox that forms mats (Hickman 1993 third printing with corrections 1996), which is unlike the erect stem, open branch habit of *P. hirsuta.*

Phlox hirsuta is found on serpentine soils at elevations from 880 to 1,340 meters (2,800 to 4,400 feet) in association with *Pinus jeffreyi* (Jeffrey pine), *Calocedrus decurrens* (incense cedar), and *Juniperus* spp. (junipers) (CNPS 1985; California Department of Fish and Game (CDFG) 1986; California Natural Diversity Data Base (CNDDB) 1997). *Phlox hirsuta* is known from only two locations in the vicinity of Yreka, California. One occurrence is an open ridge in a juniper woodland within the city limits of Yreka (CNPS 1977, 1985; CNDDB 1997). Estimates of the area occupied by the occurrence range from approximately 15 hectares (ha) (37 acres (ac)) (Grant and Virginia Fletcher, *in litt.* 1995) to approximately 36 ha (90 ac) (Nancy Kang, Service, *in litt.* 1995a). Other extreme serpentine sites searched in the area do not support additional populations of *Phlox hirsuta* (Adams 1987). The second occurrence is about 8 to 10 km (5 to 6 mi) southwest of Yreka along California State Highway 3 in an open Jeffrey pine forest (CNPS 1977, 1985; CNDDB 1997) and includes approximately 65 ha (160 ac) of occupied habitat (Service maps on file). A third location, where the species was last reported in 1930, is in the vicinity of Mill Creek near Etna Mills. The area was searched, but no plants or appropriate habitats were identified (CNPS 1985), and the location may be incorrect (CDFG 1986; Adams 1987). Surveys have been conducted on 80 percent of the potential habitat (defined as the presence of suitable soils) on Klamath National Forest (Ken Fuller and Diane Elam, Service, *in litt.* 1997; Barbara Williams, Klamath National Forest, pers. comm. 1997) and Bureau of Land Management (Joe Molter, Bureau of Land Management, pers. comm. 1997) lands within the Redding Resource Area; no new populations of *P. hirsuta* have been discovered.

Land ownership of the two occurrences of *Phlox hirsuta* is a mixture of private, the City of Yreka, and the US Forest Service (CNDDB 1997). The City of Yreka occurrence of *P. hirsuta* is the more vigorous and dense of the two occurrences (Linda Barker, Klamath National Forest, *in litt.* 1985; Adams 1987; CNDDB 1997). Part of the *P. hirsuta* occurrence in the City of Yreka is owned by the City of Yreka; the remainder is privately owned (Larry Bacon, City of Yreka, pers. comm. 1997). The Highway 3 occurrence is partially on US Forest Service lands on the Klamath National Forest, partially within a State highway right-of-way, and partially privately owned (CDFG 1986; CNDDB 1997). Approximately 50 percent of occupied habitat at the Highway 3 occurrence and 25 percent of the occupied habitat of the species is on land administered by the Klamath National Forest (based on maps in Service files; B. Williams, pers. comm. 1997). *Phlox hirsuta* is threatened by urbanization at the City of Yreka location and by inadequate State regulatory mechanisms throughout its range. The small number of populations and small range of the species also make it vulnerable to decline or extirpation due to random events throughout its range.

Previous Federal Action

Federal action on *Phlox hirsuta* began as a result of section 12 of the Act, which directed the Secretary of the Smithsonian Institution to prepare a report on those plants considered to be endangered, threatened, or extinct in the United States. This report, designated as House Document No. 94–51, was presented to Congress on January 9, 1975, and included *P. hirsuta* as an endangered species. We published a notice in the July 1, 1975, **Federal Register** (40 FR 27823), announcing our decision to treat the Smithsonian report as a petition within the context of section 4(c)(2) (now section 4(b)(3) of the Act) and our intention to review the status of *P. hirsuta*. On June 16, 1976, we published a proposal in the **Federal Register** (41 FR 24523) to determine approximately 1,700 vascular plant taxa as endangered species pursuant to section 4 of the Act. The list of 1,700 plant taxa, which included *P. hirsuta*, was assembled on the basis of comments and data received by the Smithsonian Institution and us in response to House Document No. 94–51 and the July 1, 1975, **Federal Register** publication.

We published an updated Notice of Review for plants on December 15, 1980 (45 FR 82480), that identified those plants currently being considered for listing as endangered or threatened. We included *Phlox hirsuta* as a category 1 candidate species. Category 1 candidates were defined as taxa for which we had on file substantial information on biological vulnerability and threats to support preparation of listing proposals. Our November 28, 1983, supplement to the Notice of Review (48 FR 53640) as well as the subsequent revision on September 27, 1985 (50 FR 39526), included *P. hirsuta* as a category 2 candidate. Category 2 taxa were those for which data indicated listing was possibly appropriate, but for which substantial data on biological vulnerability and threats were not currently known or on file to support a listing proposal.

We revised the plant notice of review again on February 21, 1990 (55 FR 6184), and September 30, 1993 (50 FR 51143). In both notices, we included *Phlox hirsuta* as a category 1 candidate. In our February 28, 1996, Notice of Review (61 FR 7596), we ceased using the category designations and included *P. hirsuta* as a candidate species. Candidate species are those taxa for which we have on file sufficient information on biological vulnerability and threats to support proposals to list the species as threatened or endangered.

Section 4(b)(3)(B) of the Act requires the Secretary to make certain findings on pending petitions within 12 months of their receipt. Section 2(b)(1) of the 1982 amendments further requires that all petitions pending on October 13, 1982, be treated as having been newly submitted on that date. That provision of the Act applied to *Phlox hirsuta*, because the 1975 Smithsonian report had been accepted as a petition. On October 13, 1982, we found that the petitioned listing of the species was warranted, but precluded by other pending listing actions, in accordance with section 4(b)(3)(B)(iii) of the Act; notification of this finding was published on January 20, 1984 (49 FR 2485). Such a finding requires the petition to be recycled, pursuant to section 4(b)(3)(C)(i) of the Act. The finding was reviewed annually in October of 1984 through 1997.

On April 1, 1998, we published a proposed rule to list *Phlox hirsuta* as an endangered species in the **Federal Register** (63 FR 15820). The comment period was open until June 1, 1998. With publication of this final rule, we now determine that *P. hirsuta* is endangered.

The processing of this final rule conforms with our Listing Priority Guidance published in the **Federal Register** on October 22, 1999 (64 FR 57114). The guidance clarifies the order in which we will process rulemakings. Highest priority is processing emergency listing rules for any species determined to face a significant and

imminent risk to its well-being (Priority 1). Second priority (Priority 2) is processing final determinations on proposed additions to the lists of endangered and threatened wildlife and plants. Third priority is processing new proposals to add species to the lists. The processing of administrative petition findings (petitions filed under section 4 of the Act) is the fourth priority. The processing of critical habitat determinations (prudency and determinability decisions) and proposed or final designations of critical habitat will no longer be subject to prioritization under the Listing Priority Guidance. This final rule for *Phlox hirsuta* is a Priority 2 action and is being completed in accordance with the current Listing Priority Guidance.

We have updated this rule to reflect any changes in distribution, status, and threats since publishing the proposed rule and to incorporate information obtained through the public comment period. This additional information did not alter our decision to list these species.

Summary of Comments and Recommendations

In the proposed rule published April 1, 1998, in the **Federal Register** (63 FR 15820) and associated notifications, we requested all interested parties to submit factual reports or information that might contribute to development of a final rule. We contacted and requested comments from appropriate Federal agencies, State agencies, county and city governments, scientific organizations, and other interested parties. We published an announcement of the proposed rule in the *Siskiyou Daily News* on April 3, 1998, which invited general public comment. The public comment period closed on June 1, 1998. We received no request for a public hearing.

During the public comment period, 22 individuals or agencies submitted comments. Four commenters supported the listing, 11 commenters opposed the listing, and 7 commenters were neutral. Supporting comments were received from the State and local chapter of the California Native Plant Society and two private citizens. Opposing comments were received from the Pacific Legal Foundation and 10 private citizens. Opposing comments and other comments questioning the proposed rule have been organized into specific issues. We summarized these issues and our response to each as follows:

Issue 1: One commenter opposed the listing of *Phlox hirsuta*, stating that the Federal Government lacks authority under the Commerce Clause of the Constitution to regulate this plant species.

Service Response: A recent decision in the United States Court of Appeals for the District of Columbia Circuit *National Association of Home Builders of the U.S.* v. *Babbitt,* 130 F.3d 1041 (D.C. Cir. 1997) makes it clear in its application of the test used in the United States Supreme Court case, *United States* v. *Lopez*, 514 U.S. 549 (1995), that regulation of endangered species limited to one State under the Act is within Congress' Commerce Clause power. On June 22, 1998, the Supreme Court declined to accept an appeal of this case (118 S. Ct. 2340 (1998)). Therefore, our application of the Act to *Phlox hirsuta* is constitutional.

Issue 2: Two commenters stated that existing State regulations, such as the California Environmental Quality Act (CEQA) regulatory mechanisms, were sufficient to protect *Phlox hirsuta*, and thought that federally listing *P. hirsuta* would be a duplication of effort.

Service Response: We believe that the existing State regulatory mechanisms are inadequate to protect *Phlox hirsuta*. Please see factor D in the ''Summary of Factors Affecting the Species,'' section in this rule.

We do not believe that federally listing *Phlox hirsuta* would be a duplication of effort. Federal and State regulations complement each other. As discussed further in factor D in the ''Summary of Factors Affecting the Species'' section, the CEQA and California Endangered Species Act (CESA) apply to actions on private and State lands. As applied to plant species, the Federal Endangered Species Act primarily covers Federal land and Federal actions that may affect proposed and listed species.

Issue 3: Three commenters questioned the rarity of *Phlox hirsuta*. One of the commenters, in response to seeing an article in the *Siskiyou Daily News*, stated there is a lot of Yreka phlox growing in Siskiyou and Shasta Counties. Another commenter provided a long list of places to check. A third commenter provided photos of *Phlox* occurring in Scott Valley, noting that these plants appear to be very similar to the photo of *Phlox hirsuta* published in the *Siskiyou Daily News* on April 3, 1998.

Service Response: We maintain that *Phlox hirsuta* is a very rare plant. As discussed in the ''Background'' section of this rule, several other *Phlox* species, that are much more abundant, may occur within the range of *Phlox hirsuta*. We sent the photos of *Phlox* from Scott Valley to Barbara Williams, Forest Botanist for the Klamath National Forest, who identified the *Phlox* as *Phlox diffusa*.

Issue 4: One commenter stated that we should consider the economic effects of the listing on the local economies where the plant occurs.

Service Response: Under section 4(b)(1)(A) of the Act, a listing determination must be based solely on the best scientific and commercial data available about whether a species meets the Act's definition of a threatened or endangered species. The legislative history of this provision clearly states the intent of Congress to ''ensure'' that listing decisions are ''based solely on biological criteria and to prevent non-biological considerations from affecting such decisions,'' H.R. Rep. NO. 97–835, 97th Cong., 2nd Sess. 19 (1982). As further stated in the legislative history, ''applying economic criteria . . . to any phase of the species listing process is applying economics to the determinations made under section 4 of the Act and is specifically rejected by the inclusion of the word 'solely' in the legislation,'' H.R. Rep. NO. 97–835, 97th Cong. 2nd Sess. 19 (1982). Because we are precluded from considering economic impacts in a final decision on a proposed listing, we did not examine such impacts.

Issue 5: Three commenters were concerned the listing would violate private property rights under the Fifth Amendment to the US Constitution. A fourth commenter stated that public and private property owners should be adequately compensated for setting aside land for *Phlox hirsuta*.

Service Response: We disagree that the listing of *Phlox hirsuta* would constitute a taking of private property in violation of the Fifth Amendment to the Constitution. The regulatory protection afforded listed plant species under the Act is limited. In particular, section 9 of the Act does not prohibit the ''take'' of listed plant species on private lands. Generally, as applied to private property, only the removal, damage, or destruction of listed plant species in violation of a State law or regulation or in the course of a violation of a State criminal trespass law is a violation of the Act. Further, the mere issuance of a regulation, like the enactment of a statute, is rarely sufficient to establish that private property has been taken unless the regulation itself appears to deny the property owner economically viable use of personal property. In order to establish that their properties have been taken as a result of a regulatory action, such as the listing of a species, property owners must first initiate an attempt to utilize their property and

receive a determination regarding the level of use that is less than allowed prior to the listing. Property owners must ordinarily apply for all available permits and waivers before takings could potentially be established. The commenters have not provided any cogent legal basis for their assertions that listing *Phlox hirsuta* will result in a Fifth Amendment taking of private property.

Issue 6: Several commenters were concerned about how private landowners may be affected by the listing of *Phlox hirsuta*.

Service Response: Portions of the two *Phlox hirsuta* populations do grow on private land. As noted above, Federal listing does not restrict the damage or destruction of listed plants due to otherwise lawful private activities on private land beyond any level of protection that may be provided under State law. Federal listing of plants does not restrict any uses of privately owned land unless Federal funding or a Federal permit is involved. Listing *Phlox hirsuta* as endangered likely will not affect logging, farming, or ranching operations, including cattle grazing, on private land. Other activities that do not violate the taking prohibitions of section 9(a)(2) of the Act, as well as prohibited activities, are discussed further under the ''Available Conservation Measures'' section of this rule.

Issue 7: Four commenters questioned the prudence of saving endangered species.

Service Response: The Act directs us to conserve endangered and threatened species. The Act reflects the value Congress and the American people place upon the biological diversity of the United States. When a species goes extinct, part of our natural heritage has been lost and cannot be replaced. Additionally, every species is part of the biological network that supports all life. A species in decline is a sign that something may be wrong in the environment. By addressing the causes of a plant or animal's decline we are protecting the environment on which we all depend.

Issue 8: One commenter asked how the threats to *Phlox hirsuta* might be eliminated.

Service Response: Generally, recovery strategies for plants focus first on protection and management of known populations. This process would involve working with landowners to avoid adverse effects to the species. If use of private land does not involve Federal funding or permitting, or violate a State law, we do not have the authority to prevent any action that might affect federally listed plants. In these situations, the Service hopes that private landowners will work with us voluntarily to minimize the effects of their projects to listed species. When actions involve Federal land (as with U.S. Forest Service land) or Federal funding (as may be the case with California Department of Transportation (Caltrans) activities), we work with the Federal agency involved to minimize effects to listed species. When plant species consist of very few populations and/or very small ranges, like *Phlox hirsuta*, recovery strategies also include collection of seed for storage in botanic gardens. This action is designed to prevent extinction of the species due to catastrophic events (such as a flood) and to provide seeds for introduction to other sites, should we find that introductions are appropriate.

Issue 9: Three commenters wanted to know the difference between *Phlox hirsuta* and other phloxes such as ''common phlox,'' *P. caespitosa* (tufted phlox), and *P. diffusa* (spreading phlox).

Service Response: The Jepson Manual, Higher Plants of California (Hickman 1993 third printing with corrections 1996), provides the technical description of differences in these species. We recognize The Jepson Manual as the most recently accepted taxonomic treatment of plants in California. The Jepson Manual is the most recent taxonomic identification key (or flora, *i.e.*, a treatise on the plants of an area) for plants of California, and the flora to which we refer for plant taxonomy. Earlier treatments of *P. caespitosa*, and its varieties, suggest it has smaller flowers than *P. hirsuta*. All of the treatments also describe *P. caespitosa*, and its varieties, as having a densely clumped (not open), tufted, or cushion-like growth form. In contrast, *P. hirsuta* is described as a subshrub (small shrub) having an erect stem and open branches. Please see the ''Background'' section of this rule for a discussion on how *P. hirsuta* differs from *P. diffusa* and other common phloxes.

Peer Review

In accordance with Interagency Cooperative Policy published on July 1, 1994 (59 FR 34270), we solicited formal scientific peer review and expert opinions of three independent and appropriate specialists regarding pertinent scientific or commercial data and assumptions relating to the taxonomy, population status, and supportive biological and ecological information for the proposed plant.

Only one of the three requested reviewers provided comments. This reviewer supported the listing of *Phlox hirsuta* and commented specifically on the rarity of *P. hirsuta*. The reviewer stated that a number of botanists and other professionals interested in *Phlox*, in addition to those mentioned in the proposed rule, have searched very carefully for *P. hirsuta* populations without success. The reviewer thought that finding additional sites for *P. hirsuta* is very unlikely.

Summary of Factors Affecting the Species

Section 4 of the Act (16 U.S.C. 1533) and the regulations (50 CFR part 424) issued to implement the listing provisions of the Act set forth the procedures for adding species to the Federal lists. A species may be determined to be endangered or threatened due to one or more of the five factors described in section 4(a)(1). These factors and their application to *Phlox hirsuta* E.E. Nelson (Yreka phlox) are as follows:

A. *The present or threatened destruction, modification, or curtailment of its habitat or range.* The *Phlox hirsuta* population within the City of Yreka represents at least 18 percent, and possibly 45 percent, of occupied habitat for the species (calculated from Service records). This population is threatened by development, with the majority of the site already subdivided into lots for development (CNPS 1985; CDFG 1986). Eight of the subdivision lots support *P. hirsuta*; of these eight, seven have *P. hirsuta* on at least 75 percent of the lot (N. Kang, *in litt.* 1995a). Six of the eight lots are privately owned, and two are owned by the City of Yreka. Additionally, a smaller piece of land in the same area supports *P. hirsuta* and is also owned by the City (N. Kang, *in litt.* 1995a; L. Bacon, pers. comm. 1997). The *P. hirsuta* occurrence within the City of Yreka has been disturbed by road construction associated with the subdivision (CNPS 1985; CDFG 1986). An unmaintained roadway bisects the occurrence and likely represents permanent destruction of habitat at the site (N. Kang, *in litt.* 1995a). Additional disturbance resulted from grading for a house pad on one lot in 1994; *Phlox hirsuta* has not reinvaded the disturbed area (N. Kang, *in litt.* 1995a, 1995b). For most of the lots in the subdivision, ''the likely ones to be developed currently provide *P. hirsuta* habitat'' (N. Kang, *in litt.* 1995a, 1995b). Because *P. hirsuta* plants are fairly evenly distributed across the lots, strategic placement of development in occupied habitat would not necessarily minimize impacts to the species. Additionally, over the long-term, private landowners may not maintain their properties in a manner

consistent with protection of the plants and their habitat (N. Kang, *in litt.* 1995a). Formerly, some lots at the site were registered with The Nature Conservancy landowner contact program, but that program no longer exists (Lynn Lozier, The Nature Conservancy, pers. comm. 1997). While we are unaware of specific development plans on any lots at this time, a ''for sale'' sign was posted on the private property in May 1997 (K. Fuller and D. Elam, *in litt.* 1997).

The only other occurrence of *Phlox hirsuta*, located along California State Highway 3, has been disturbed in the past by logging and road construction. Although selective logging (CNPS 1985; Adams 1987) resulted in roads and bulldozer trails through the site (Adams 1987), logging is probably not a threat to *P. hirsuta* at this time (K. Fuller and D. Elam, *in litt.* 1997; B. Williams, pers. comm. 1997). Thirty years ago, the realignment of Highway 3 impacted part of this occurrence (Sharon Stacey, Caltrans, pers. comm. 1996). The area has since been designated by Caltrans as an Environmentally Sensitive Area (S. Stacey, pers. comm. 1998), which provides limited protection in that it requires acknowledgment of a sensitive species occurrence in project planning. Although road maintenance crews are to be made aware that no new ground is to be disturbed along this stretch of highway (Bob Sheffield, Caltrans, pers. comm. 1997), the portion of the occurrence within the Caltrans right-of-way could be disturbed by road maintenance (Charlotte Bowen, Caltrans, *in litt.* 1991). The area within the right-of-way consists of 5 small subpopulations with approximately 100 plants, occupying less than 0.8 hectare (2 ac) along 4 km (2.5 mi) of California State Highway 3. While encroaching development has been considered to be a potential threat to the plants occurring on private lands at the Highway 3 site (CNPS 1985; CDFG 1986), the threat from development at this site does not appear imminent.

B. *Overutilization for commercial, recreational, scientific, or educational purposes.* Overutilization is not known to be a threat to *Phlox hirsuta*, although it has been suggested that the species may be of interest to rock garden enthusiasts (CNPS 1977).

C. *Disease or predation.* Disease presents no known threat to Phlox hirsuta. Parts of the Highway 3 site have been grazed in the past, perhaps by trespassing cattle (CNPS 1985; Adams 1987). However, grazing is probably not a threat to *P. hirsuta* at this time (K. Fuller and D. Elam, *in litt.* 1997; B. Williams, pers. comm. 1997).

D. *The inadequacy of existing regulatory mechanisms.* The State of California Fish and Game Commission (CFGC) listed *Phlox hirsuta* as an endangered species under the California Endangered Species Act (CESA) (Chapter 1.5 section 2050 *et seq.* of the California Fish and Game Code and Title 14 California Code of Regulations 670.2). Although the ''take'' of State-listed plants has long been prohibited under the California Native Plant Protection Act (CNPPA) (Chapter 10 § 1908) and CESA (Chapter 1.5 section 2080), in the past these statutes have not provided adequate protection for such plants from the impacts of habitat modification or land use change. For example, under the CNPPA, after the California Department of Fish and Game notifies a landowner that a State-listed plant grows on his or her property, the statute requires only that the landowner notify the agency ''at least 10 days in advance of changing the land use to allow salvage of such a plant'' (CNPPA, Chapter 10 § 1913). Under recent amendments to CESA, a permit under Section 2081(b) of the California Fish and Game Code is required to ''take'' State-listed species incidental to otherwise lawful activities. The amendments require that impacts to the species be fully mitigated. However, these requirements have not been tested with respect to State-listed plant species, and several years will be required to evaluate their effectiveness.

CEQA requires full disclosure of potential environmental impacts of proposed projects, including impacts on State-listed plant species. Therefore, before proceeding with development of private and City of Yreka lands where *Phlox hirsuta* grows, the City of Yreka would require CEQA review (L. Bacon, pers. comm. 1997). The public agency with primary authority or jurisdiction over the project is designated as the lead agency and is responsible for conducting a review of the project and consulting with the other agencies concerned with the resources affected by the project. Section 15065 of the CEQA Guidelines requires a finding of significance if a project has the potential to ''reduce the number or restrict the range of a rare or endangered plant or animal.'' Once significant effects are identified, the lead agency may require mitigation for these effects through changes in the project or a mitigation plan. When mitigation plans are required, they often involve transplantation of the plant species to an existing or artificially created habitat, followed by destruction of the original site. Therefore, if the mitigation effort fails, the resource has already been lost. Furthermore, CEQA does not guarantee that such conservation efforts will be implemented. Finally mitigation is at the discretion of the lead agency, which may decide that overriding considerations make mitigation infeasible. In the latter case, projects that cause significant environmental damage, such as destruction of endangered species, may be approved. Protection of listed species through CEQA is, therefore, dependent upon the discretion of the agency involved.

E. *Other natural or manmade factors affecting its continued existence. Phlox hirsuta* is known from only two small occurrences, which occupy fewer than 121 ha (300 ac) in a restricted habitat type (serpentine soils) over a very small range (approximately 65 square-km (25 square-mi)). The combination of only two populations, small range, and restricted habitat makes the species highly susceptible to extinction or extirpation from a significant portion of its range due to random events such as fire, drought, disease, or other occurrences (Shaffer 1981, 1987; Meffe and Carroll 1994). Such events are not usually a concern until the number of populations or geographic distribution become severely limited, as is the case with *Phlox hirsuta*. Once the number of populations or the plant population size is reduced, the remnant populations, or portions of populations, have a higher probability of extinction from random events (Primack 1993).

We have carefully assessed the best scientific and commercial information available regarding the past, present, and future threats faced by *Phlox hirsuta* in determining to finalize this rule. Urbanization, inadequate State regulatory mechanisms, and extirpation from random events due to the small number of populations and small range of the species threaten *P. hirsuta*. The two occurrences of *P. hirsuta* total fewer than 121 ha (300 ac) of occupied habitat in the vicinity of the City of Yreka, Siskiyou County, California. The site within the City of Yreka is already subdivided, has been disturbed by activities associated with urbanization in the past, is situated in an area that is suitable for development, and is unprotected from this threat. In addition, both occurrences are at risk due to inadequate State regulatory mechanisms and due to potential extirpation of all or part of the occurrences due to random events. Therefore, the preferred action is to list *P. hirsuta* as endangered.

Alternatives to listing were considered before publication of this final rule. The other alternatives were

not preferred because they would not provide adequate protection and would not be consistent with the Act. Listing *Phlox hirsuta* as endangered would provide Federal protection for the species and result in additional protection as outlined under the ''Available Conservation Measures'' section.

Critical Habitat

In the proposed rule, we indicated that designation of critical habitat was not prudent for *Phlox hirsuta* because of a concern that publication of precise maps and descriptions of critical habitat in the **Federal Register** could increase the vulnerability of this species to incidents of collection and vandalism. We also indicated that designation of critical habitat was not prudent because we believed it would not provide any additional benefit beyond that provided through listing as endangered.

In the last few years, a series of court decisions have overturned Service determinations regarding a variety of species that designation of critical habitat would not be prudent (*e.g.*, *Natural Resources Defense Council* v. *U.S. Department of the Interior* 113 F. 3d 1121 (9th Cir. 1997); *Conservation Council for Hawaii* v. *Babbitt*, 2 F. Supp. 2d 1280 (D. Hawaii 1998)). Based on the standards applied in those judicial opinions, we have reexamined the question of whether critical habitat designation for *Phlox hirsuta* would be prudent.

Due to the small number of populations, *Phlox hirsuta* is vulnerable to unrestricted collection, vandalism, or other disturbance. We remain concerned that these threats might be exacerbated by the publication of critical habitat maps and further dissemination of locational information. However, we have examined the evidence available for *P. hirsuta* and have not found specific evidence of taking, vandalism, collection, or trade of this species or any similarly situated species. Consequently, consistent with applicable regulations (50 CFR 424.12(a)(1)(i)) and recent case law, we do not expect that the identification of critical habitat will increase the degree of threat to this species of taking or other human activity.

In the absence of a finding that critical habitat would increase threats to a species, if there are any benefits to critical habitat designation, then a prudent finding is warranted. In the case of this species, designation of critical habitat may provide some benefits. The primary regulatory effect of critical habitat is the section 7 requirement that Federal agencies refrain from taking any action that destroys or adversely modifies critical habitat. While a critical habitat designation for habitat currently occupied by this species would not be likely to change the section 7 consultation outcome (because an action that destroys or adversely modifies such critical habitat would also be likely to result in jeopardy to the species), in some instances, section 7 consultation might be triggered only if critical habitat is designated. Examples could include unoccupied habitat or occupied habitat that may become unoccupied in the future. Designating critical habitat may also provide some educational or informational benefits. Therefore, we find that critical habitat designation is prudent for *Phlox hirsuta*.

The Final Listing Priority Guidance for FY 2000 (64 FR 57114) states, ''The processing of critical habitat determinations (prudency and determinability decisions) and proposed or final designations of critical habitat will be funded separately from other section 4 listing actions and will no longer be subject to prioritization under the Listing Priority Guidance. Critical habitat determinations, which were previously included in final listing rules published in the **Federal Register**, may now be processed separately, in which case stand-alone critical habitat determinations will be published as notices in the **Federal Register**. We will undertake critical habitat determinations and designations during FY 2000 as allowed by our funding allocation for that year.'' As explained in detail in the Listing Priority Guidance, our listing budget is currently insufficient to allow us to complete immediately all of the listing actions required by the Act. Deferral of the critical habitat designation for *Phlox hirsuta* will allow us to concentrate our limited resources on higher priority critical habitat and other listing actions, while allowing us to put in place protections needed for the conservation of *P. hirsuta* without further delay.

We plan to employ a priority system for deciding which outstanding critical habitat designations should be addressed first. We will focus our efforts on those designations that will provide the most conservation benefit, taking into consideration the efficacy of critical habitat designation in addressing the threats to the species and the magnitude and immediacy of those threats. We will develop a proposal to designate critical habitat for *Phlox hirsuta* as soon as feasible, considering our workload priorities.

Available Conservation Measures

Conservation measures provided to species listed as endangered under the Act include recognition, recovery actions, requirements for Federal protection, and prohibitions against certain activities. Recognition through listing encourages and results in conservation actions by Federal, State, and private agencies, groups, and individuals. The Act provides for possible land acquisition and cooperation with the State and requires that recovery actions be carried out for all listed species. The protection required of Federal agencies and the prohibitions against certain activities involving listed plants are discussed, in part, below.

Section 7(a) of the Act requires Federal agencies to evaluate their actions with respect to any species that is proposed or listed as endangered and with respect to its critical habitat, if any is being designated. Regulations implementing this interagency cooperation provision of the Act are codified at 50 CFR Part 402. Section 7(a)(1) requires Federal agencies to use their authorities to further the purposes of the Act by carrying out programs for listed species. Section 7(a)(2) requires Federal agencies to ensure that activities they authorize, fund, or carry out are not likely to jeopardize the continued existence of such a species or to destroy or adversely modify its critical habitat. If a Federal action may affect a listed species or its critical habitat, the responsible Federal agency must enter into formal consultation with us.

Listing *Phlox hirsuta* would provide for development of a recovery plan for the species. The plan would bring together both State and Federal efforts for conservation of the species. The plan would establish a framework for agencies to coordinate activities and cooperate with each other in conservation efforts. The plan would set recovery priorities and estimate costs of various tasks necessary to accomplish them. The plan also would describe site-specific management actions necessary to achieve conservation and survival of *P. hirsuta*. Additionally, pursuant to section 6 of the Act, we would be able to grant funds to the State of California for management actions promoting the protection and recovery of the species.

Federal activities potentially affecting *Phlox hirsuta* include issuance of special use permits and rights-of-way. Approximately one-half of the Highway 3 occurrence of *Phlox hirsuta* occurs on lands managed by the U.S. Forest Service. The U.S. Forest Service would be required to consult with us if any

activities they authorize, fund, or carry out may affect *P. hirsuta*. For example, consultations with U.S. Forest Service may be required on road maintenance and right-of-way authorizations for projects that include adjacent or intermixed private land.

Other Federal agencies that may become involved if this rule is finalized include the Federal Highway Administration through funding provided to Caltrans. In addition, when we issue a permit under section 10 of the Act for a habitat conservation plan (HCP) prepared by a non-Federal party, we must prepare an intra-Service section 7 biological opinion regarding the effects of issuance of the section 10(a) permit on affected listed plant species.

The Act and its implementing regulations set forth a series of general prohibitions and exceptions that apply to all endangered plants. All prohibitions of section 9(a)(2) of the Act, implemented by 50 CFR 17.61 for endangered plants, apply. These prohibitions, in part, make it illegal for any person subject to the jurisdiction of the United States to import or export, transport in interstate or foreign commerce in the course of a commercial activity, sell or offer for sale in interstate or foreign commerce, or remove and reduce to possession from areas under Federal jurisdiction any such plant. In addition, the Act prohibits malicious damage or destruction on areas under Federal jurisdiction, and the removal, cutting, digging up, or damaging or destroying of such plants in knowing violation of any State law or regulation or in the course of any violation of a State criminal trespass law. Certain exceptions to the prohibitions apply to our agents and State conservation agencies.

The Act and 50 CFR 17.62 and 17.63 also provide for the issuance of permits to carry out otherwise prohibited activities involving endangered plant species. Such permits are available for scientific purposes and to enhance the propagation and survival of the species. We anticipate that few trade permits would ever be sought or issued for this species because it is not common in cultivation or in the wild.

As published in the **Federal Register** on July 1, 1994 (59 FR 34272), it is our policy to identify to the maximum extent practicable at the time a species is listed those activities that would or would not constitute a violation of section 9 of the Act. The intent of this policy is to increase public awareness of the effect of the listing on proposed and ongoing activities within a species' range. One of the two occurrences of *Phlox hirsuta* is on U.S. Forest Service lands. We believe that, based upon the best available information, the following actions will not likely result in a violation of section 9, provided these activities are carried out in accordance with existing regulations and permit requirements:

(1) Activities authorized, funded, or carried out by Federal agencies, (e.g., grazing management, agricultural conversions, wetland and riparian habitat modification, flood and erosion control, residential development, recreational trail development, road construction, hazardous material containment and cleanup activities, prescribed burns, pesticide/herbicide application, pipelines or utility lines crossing suitable habitat) when such activity is conducted in accordance with any reasonable and prudent measures given by us in a consultation conducted under section 7 of the Act, and

(2) Activities on private lands that do not involve Federal agency funding or authorization on private lands, such as construction of fences, livestock-water ponds, and livestock grazing, unless such activities are carried out in knowing violation of State law or regulation or in the course of any violation of a State criminal trespass law.

We believe that the following could result in a violation of section 9; however, possible violations are not limited to these actions alone:

(1) Unauthorized collecting of the species on Federal lands, and

(2) Interstate or foreign commerce and import/export without previously obtaining an appropriate permit. Permits to conduct activities are available for purposes of scientific research and enhancement of propagation or survival of the species.

Questions regarding whether specific activities will constitute a violation of section 9 should be directed to the Field Supervisor of the Service's Sacramento Fish and Wildlife Office (see **ADDRESSES** section).

National Environmental Policy Act

We have determined that an environmental assessment and environmental impact statement, as defined under the authority of the National Environmental Policy Act of 1969, need not be prepared in connection with regulations adopted pursuant to section 4(a) of the Act as amended. We published a notice outlining our reasons for this determination in the **Federal Register** on October 25, 1983 (48 FR 49244).

Paperwork Reduction Act

This rule does not contain any new collections of information other than those already approved under the Paperwork Reduction Act, 44 U.S.C. 3501 *et seq.*, and assigned Office of Management and Budget clearance number 1018–0094. An agency may not conduct or sponsor, and a person is not required to respond to, a collection of information, unless it displays a currently valid control number. For additional information concerning permit and associated requirements for endangered plant species, see 50 CFR 17.62 and 17.63.

References Cited

A complete list of all references in this document is available upon request from the Field Supervisor, Sacramento Fish and Wildlife Office (see **ADDRESSES** section).

Author: The primary authors of this final rule are Diane Elam and Kirsten Tarp, U.S. Fish and Wildlife Service, Sacramento Fish and Wildlife Office (see **ADDRESSES** section) (telephone 916/414–6645).

List of Subjects in 50 CFR Part 17

Endangered and threatened species, Exports, Imports, Reporting and recordkeeping requirements, Transportation.

Regulation Promulgation

For the reasons given in the preamble, we amend part 17, subchapter B of chapter I, title 50 of the Code of Federal Regulations, as set forth below:

PART 17—[AMENDED]

1. The authority citation for part 17 continues to read as follows:

Authority: 16 U.S.C. 1361–1407; 16 U.S.C. 1531–1544; 16 U.S.C. 4201–4245; Pub. L. 99–625, 100 Stat. 3500, unless otherwise noted.

2. Amend section 17.12(h) by adding the following, in alphabetical order under FLOWERING PLANTS, to the List of Endangered and Threatened Plants:

§ 17.12 Endangered and threatened plants.

* * * * *

(h) * * *

Species		Historic range	Family	Status	When listed	Critical habitat	Special rules
Scientific name	Common name						
FLOWERING PLANTS							
*	*	*	*	*	*		*
Phlox hirsuta	Yreka phlox	U.S.A. (CA)	Polemoniaceae	E	683		NA
*	*	*	*	*	*		*

Dated: January 13, 2000.

Jamie Rappaport Clark,

Director, Fish and Wildlife Service.

[FR Doc. 00–2310 Filed 2–2–00; 8:45 am]

BILLING CODE 4310–55–P

DEPARTMENT OF THE INTERIOR

Fish and Wildlife Service

50 CFR Part 18

RIN 1018–AF87

Marine Mammals; Incidental Take During Specified Activities

AGENCY: Fish and Wildlife Service, Interior.

ACTION: Final rule.

SUMMARY: This final rule reinstates our existing rule issued Thursday, January 28, 1999 (64 FR 4328), and codified at 50 CFR Part 18, Subpart J to authorize the incidental, unintentional take of small numbers of polar bears and Pacific walrus during oil and gas industry (Industry) exploration, development, and production operations in the Beaufort Sea and adjacent northern coast of Alaska. This final rule authorizes incidental, unintentional take of small numbers of polar bears and Pacific walrus only for activities covered by our existing regulations at 50 CFR Part 18, Subpart J; incidental take resulting from any subsea pipeline activities located offshore in the Beaufort Sea is not authorized. This final rule reinstates regulations at 50 CFR Part 18, Subpart J effective through March 31, 2000.

DATES: This rule is effective February 3, 2000 through March 31, 2000.

ADDRESSES: Comments and materials received in response to this action are available for public inspection during normal working hours of 8:00 a.m. to 4:30 p.m., Monday through Friday, at the Office of Marine Mammals Management, U.S. Fish and Wildlife Service, 1011 E. Tudor Road, Anchorage, AK 99503.

FOR FURTHER INFORMATION CONTACT: John Bridges, Office of Marine Mammals Management, U.S. Fish and Wildlife Service, 1011 East Tudor Road, Anchorage, AK 99503, Telephone (907) 786–3810 or 1–800–362–5148.

SUPPLEMENTARY INFORMATION:

Background

Section 101(a)(5)(A) of the Marine Mammal Protection Act (Act) gives the Secretary of the Interior (Secretary) through the Director of the U.S. Fish and Wildlife Service (We) the authority to allow the incidental, but not intentional, taking of small numbers of marine mammals in response to requests by U.S. citizens (you) [as defined in 50 CFR 18.27(c)] engaged in a specified activity (other than commercial fishing) in a specific geographic region. We may grant permission for incidental takes for periods of up to 5 years. On January 28, 1999, we published in the **Federal Register** (64 FR 4328) regulations to allow such incidental takes in the Beaufort Sea and adjacent northern coast of Alaska for the period January 28, 1999, through January 30, 2000. These regulations were based on the findings for the 1-year period that the effects of oil and gas related exploration, development, and production activities in the Beaufort Sea and adjacent northern coast of Alaska would have a negligible impact on polar bears and Pacific walrus and their habitat and no unmitigable adverse impact on the availability of these species for subsistence uses by Alaska Natives, if certain conditions were met.

Our present action reinstates the current regulations that expired on January 30, 2000, which are located at 50 CFR Part 18, Subpart J, effective through March 31, 2000. This rulemaking was intended to avoid a lapse in these regulations while we considered public comments on our proposed regulations published December 9, 1999 (64 FR 68973), the comment period for which closed on January 10, 2000. Those proposed regulations would allow the incidental, unintentional take of small numbers of polar bears and Pacific walrus for a 3-year period during year-round oil and gas activities, including incidental takes resulting from the construction and operation of a subsea pipeline associated with the offshore Northstar facility.

We are reinstating our now expired regulations through March 31, 2000, to ensure that we have adequate time to thoroughly review and respond to public input on our December 9, 1999, proposed rule. We believe it is important to maintain the coverage and protection for polar bears and Pacific walrus provided by those regulations. Existing Letters of Authorization, which require monitoring and reporting of all polar bear interactions as well as site-specific mitigation measures, will be reissued.

Prior to issuing regulations at 50 CFR Part 18, Subpart J, we evaluated the level of industrial activities, their associated impacts to polar bears and Pacific walrus, and their effects on the availability of these species for subsistence use. Based on the best scientific information available and the results of 6 years of monitoring data, we found that the effects of oil and gas related exploration, development, and production activities in the Beaufort Sea and the adjacent northern coast of Alaska would have a negligible impact on polar bears and Pacific walrus and their habitat. We also found that the activities as described would have no unmitigable adverse impacts on the availability of these species for subsistence use by Alaska Natives.

The regulations that we are reinstating include permissible methods of taking and other means to ensure the least adverse impact on the species and its habitat and on the availability of these species for subsistence uses along with other relevant sections. This includes requirements for monitoring and reporting. The geographic coverage is the same as the regulations we issued on January 28, 1999. All existing Letters of Authorization will be reissued.

Description of Activity

This rulemaking covers activities as described in the existing rule issued on January 28, 1999, that we expect to occur during the brief duration of this rule. These activities include exploration activities such as geological and geophysical surveys, which include geotechnical site investigation, reflective seismic exploration, vibrator seismic data collection, air gun and water gun seismic data collection, explosive seismic data collection, geological surveys, and drilling operations. Development and production activities located on the North Slope along the shores of the Beaufort Sea are included. The activities are limited to those that occur during the winter. The level of activity expected is similar to that as occurred last winter under existing regulations that we issued on January 28, 1999. This region contains more than 11 separate oil fields. All of the fields lie within the range of polar bears.

Effects of Oil and Gas Industry Activities on Marine Mammals and on Subsistence Uses

Polar Bear

Winter oil and gas activities may affect polar bears. Polar bears that continue to move over the ice pack through the winter are likely to encounter Industry activities. Curious polar bears are likely to investigate artificial or natural islands where drilling operations occur. Any on-ice activity creates an opportunity for interactions between bears and industry. Offshore drill sites may modify habitat and attract polar bears to artificial open leads downwind from the activity. Polar bears attracted to these open water leads create the potential for Industry/polar bear encounters. Winter seismic activities have a potential of disturbing denning females, which are sensitive to noise disturbances. Prior to initiating surveys, industry consults with us through applications for Letters of Authorization. Specific terms of a Letter of Authorization require that industrial activities avoid known or observed dens by 1 mile through cooperative operating procedures. In addition, Letters of Authorization require development of polar bear interaction plans for each operation. Industry personnel participate in training programs while on site to minimize detrimental effects on personnel and polar bears. During the past 6 years, Letter of Authorization conditions have limited the time and location of Industry activities in known polar bear denning habitat. In addition to avoiding known den locations of radio collared polar bears, Industry has conducted aerial survey overflights of potential denning habitat using forward looking infrared thermal sensors to detect dens located beneath snow. A number of den locations have been identified prior to Industry activities, avoiding potential disturbance. Regarding polar bear/human interactions, Industry has taken proactive steps to minimize the aspect of scent attraction to sites through proper disposal of garbage and waste products. Yet a number of potentially dangerous encounters have occurred in recent years. These encounters have not resulted in injury to polar bears or humans. A degree of credit for this success rate is attributed to enhanced employee awareness and proper responses to polar bear encounters brought about through materials contained within polar bear interaction plans.

Pacific Walrus

Pacific walrus rarely use the geographical area during the preferred open water season and do not occur in the area during the winter including the February and March period of the final regulations. Consequently, no direct or cumulative effect of Industry activities to Pacific walrus are expected.

Subsistence Use

Polar bears

Polar bears may be hunted in February and March by residents of Barrow, Nuiqsut, and Kaktovik, although the numbers of bears taken in mid-winter months is typically less than during the spring or fall seasons. Hunter success varies from year to year and with seasonal variations within a year. As required in the existing regulations, Industry is required to work through plans of cooperation with potentially affected subsistence communities to minimize and mitigate for potential impact on the availability of polar bears for subsistence uses, where necessary. We do not expect conflicts between subsistence users and Industry during the February and March term of these regulations. Previously, we have not noted conflicts between subsistence users and Industry under the existing regulations.

Pacific Walrus

Pacific walrus are not present and thus are unavailable for harvest during the winter in this area. No direct or cumulative effect on their availability for take for subsistence use would occur from industrial activities.

Conclusions

Based on the previous discussion of direct, indirect, and cumulative effects, and 6 years of results of prior monitoring programs, we make the following findings regarding this final rulemaking. We find, based on the best scientific evidence available and the results of 6 years' monitoring data, that the effects of oil and gas exploration, development, and production activities for the period February 3, 2000 through March 31, 2000, in the Beaufort Sea and adjacent northern coast of Alaska will have a negligible impact on polar bears and Pacific walrus and their habitat, and that there will be no unmitigable adverse impacts on the availability of these species for take for subsistence uses by Alaska Natives if conditions contained within Letters of Authorization are met. Consistent with our regulations at 50 CFR Part 18, Subpart J, issued on January 28, 1999, our findings apply to exploration, development, and production related to oil and gas activities, excluding any construction and production activities associated with subsea pipelines at the Northstar facility.

Discussion of Comments on the Proposed Rule

The proposed rule and request for comments was published in the **Federal Register** (65 FR 105) on January 3, 2000. The closing date for comments was January 13, 2000. We received 2 comments in the same letter, as follows:

Comment: the public comment period was insufficient and should be extended 30 days.

Response: We acknowledge that 10 days is a brief comment period. Nonetheless, the short comment period was considered unavoidable give the timeframe for publishing a rule intended to extend existing regulations at 50 CFR part 18, subpart J by 61 days through March 31, 2000, thereby avoiding a lapse in polar bear and Pacific walrus protections. Reinstating the current regulations will provide sufficient time to evaluate public comments received on our proposed 3 years regulations (64 FR 68973) published on December 9, 1999, the comment period for which closed on January 10, 2000, for the incidental take of polar bears and Pacific walrus in the Beaufort Sea region. The primary benefit of maintaining regulations while we continue our review is to ensure that mitigation and monitoring requirements remain in place for the ongoing activities in the region. However, because existing regulations at 50 CFR part 18, subpart J expired before this

final rule could be published, this final rule now reinstates those regulations effective on date of publication through March 31, 2000.

Comment: The expected level of activity is much greater than in previous years and significant harassment could occur in 60 days.

Response: We do not anticipate a significant increase in activity in the region that would cause a greater than negligible effect on the polar bear and Pacific walrus populations, or an unmitigable adverse impact on the availability of these species for taking for subsistence uses by Alaska Natives. Monitoring of the activity associated with the Northstar Project during the previous year's construction season reported minimal interaction with polar bears. Based on polar bear distribution and movements during mid-winter (the period of the 2 month extension), we do not expect significant differences in the rate of encounters as compared to last year.

Required Determinations

Environmental documents prepared for our regulations at 50 CFR Part 18, Subject J concluded in a finding of no significant impact. These final regulations cover the same activities as analyzed under the current environmental assessment and are therefore consistent with those findings and the requirements of the National Environmental Policy Act.

This document has not been reviewed by the Office of Management and Budget under Executive Order 12866 (Regulatory Planning and Review). This rule will not have an effect of $100 million or more on the economy; will not adversely affect in a material way the economy, productivity, competition, jobs, the environment, public health or safety, or State, local, or tribal governments or communities; will not create a serious inconsistency or otherwise interfere with an action taken or planned by another agency; does not alter the budgetary effects or entitlement, grants, user fees, or loan programs or the rights or obligations of their recipients; and does not raise novel legal or policy issues. The final rule is not likely to result in an annual effect on the economy of $100 million or more. Expenses will be related to, but not necessarily limited to, the development of applications for regulations and Letters of Authorization (LOA), monitoring, record keeping, and reporting activities conducted during Industry oil and gas operations, development of polar bear interaction plans, and coordination with Alaska Natives to minimize effects of operations on subsistence hunting. Compliance with the rule is not expected to result in additional costs to Industry that it has not already been subjected to for the previous 6 years. Realistically, these costs are minimal in comparison to those related to actual oil and gas exploration, development, and production operations. The actual costs to Industry to develop the petition for promulgation of regulations (originally developed in 1997) and LOA requests probably does not exceed $500,000 per year, short of the ''major rule'' threshold that would require preparation of a regulatory impact analysis. As is presently the case, profits would accrue to Industry; royalties and taxes would accrue to the Government; and the rule would have little or no impact on decisions by Industry to relinquish tracts and write off bonus payments.

This rule is not a major rule under 5 U.S.C. 804(2), the Small Business Regulatory Enforcement Fairness Act. The rule is also not likely to result in a major increase in costs or prices for consumers, individual industries, or government agencies or have significant adverse effects on competition, employment, productivity, innovation, or on the ability of U.S.-based enterprises to compete with foreign-based enterprises in domestic or export markets.

We have also determined that this final rule will not have a significant economic effect on a substantial number of small entities under the Regulatory Flexibility Act, 5 U.S.C. 601, *et seq.* Oil companies and their contractors conducting exploration, development, and production activities in Alaska have been identified as the only likely applicants under the regulations. These potential applicants have not been identified as small businesses. The analysis for this rule is available from the person in Alaska identified above in the section, **FOR FURTHER INFORMATION CONTACT.**

This final rule is not expected to have a potential takings implication under Executive Order 12630 because it would authorize the incidental, but not intentional, take of polar bear and walrus by oil and gas industry companies and thereby exempt these companies from civil and criminal liability.

This final rule also does not contain policies with Federalism implications sufficient to warrant preparation of a Federalism Assessment under Executive Order 13132. Coordination with appropriate Alaska State agencies has occurred, and necessary permits have been received to ensure State consistency. In addition, extensive coordination with the North Slope Borough and other Alaska Native organizations has occurred concerning this issue. In accordance with the Unfunded Mandates Reform Act (2 U.S.C. 1501, *et seq.*), this rule will not ''significantly or uniquely'' affect small governments. A Small Government Agency Plan is not required. The Service has determined and certifies pursuant to the Unfunded Mandates Reform Act that this rulemaking will not impose a cost of $100 million or more in any given year on local or State governments or private entities. This rule will not produce a Federal mandate of $100 million or greater in any year, i.e., it is not a ''significant regulatory action'' under the Unfunded Mandates Reform Act.

The Departmental Solicitor's Office has determined that these regulations meet the applicable standards provided in Sections 3(a) and 3(b)(2) of Executive Order 12988.

The information collection contained in 50 CFR part 18, subpart J has been approved by the Office of Management and Budget (OMB) under the Paperwork Reduction Act (44 U.S.C. 3501 *et seq.*) and assigned clearance number 1018–0070. The OMB approval of our collection of this information will expire in October 2001. Section 18.129 contains the public notice information—including identification of the estimated burden and obligation to respond—required under the Paperwork Reduction Act. Information from our Marking, Tagging, and Reporting Program is cleared under OMB Number 1018–0066 pursuant to the Paperwork Reduction Act. For information on our Marking, Tagging, and Reporting Program, see 50 CFR 18.23(f)(12).

The Administrative Procedure Act, 5 U.S.C. 553(d), generally requires that the effective date of a final rule not be less than 30 days from publication date of the rule. Section 553(d)(1) provides that the 30 day period may be waived if the rule grants or recognizes an exemption or relieves a restriction. Since this rule relieves certain restrictions concerning take of marine mammals, and the previous exemption has expired, we have determined that this final rule should be made effective upon the date of publication.

List of Subjects in 50 CFR Part 18

Administrative practice and procedure, Alaska, Imports, Indians, marine mammals, Oil and gas exploration, Reporting and recordkeeping requirements, Transportation.

For the reasons set forth in the preamble, we amend Part 18,

Subchapter B of Chapter 1, Title 50 of the Code of Federal Regulations as set forth below:

PART 18—MARINE MAMMALS

1. The authority citation for 50 CFR Part 18 continues to read as follows:

Authority: 16 U.S.C. 1361 *et seq.*

2. Revise § 18.123 to read as follows:

§ 18.123 When is this rule effective?

Regulations in this subpart are effective February 3, 2000 through March 31, 2000, for oil and gas exploration, development, and production activities.

Dated: January 28, 2000.

Stephen C. Saunders,

Acting Assistant Secretary for Fish and Wildlife and Parks.

[FR Doc. 00–2443 Filed 2–1–00; 8:45 am]

BILLING CODE 4310–55–M

DEPARTMENT OF COMMERCE

National Oceanic and Atmospheric Administration

50 CFR Part 679

[Docket No. 991210331–0017–02; I.D. 102899B]

RIN 0648–AN34

Fisheries of the Exclusive Economic Zone off Alaska; Inshore Fee System for Repayment of the Loan to Harvesters of Pollock from the Directed Fishing Allowance Allocated to the Inshore Component Under Section 206(b)(1) of the American Fisheries Act (AFA)

AGENCY: National Marine Fisheries Service (NMFS), National Oceanic and Atmospheric Administration (NOAA), Commerce.

ACTION: Final rule.

SUMMARY: NMFS issues final regulations implementing an inshore fee system for all pollock harvested under the inshore component (IC) of the Bering Sea/Aleutian Islands directed fishing allowance under section 206(b)(1) of the AFA. The AFA authorized a $75 million loan to reduce fishing capacity for offshore component (OC) pollock and an inshore fee system as the means of repaying the loan. The proceeds of the loan partly paid the cost of removing nine OC catcher-processors from all commercial fishing in the U.S. exclusive economic zone (EEZ). The intent of this rule is to implement the inshore fee system.

DATES: This final rule is effective February 10, 2000.

ADDRESSES: Copies of the Environmental Assessment, Regulatory Impact Review, and Final Regulatory Flexibility Analysis (EA/RIR/FRFA) may be obtained from Michael L. Grable, Chief, Financial Services Division, NMFS, 1315 East-West Highway, Silver Spring, MD 20910. Comments involving the reporting burden estimates or any other aspects of the collection of information requirements contained in this final rule should be sent to both Michael L. Grable, at the above address, and to the Office of Information and Regulatory Affairs, Office of Management and Budget (OMB), Washington, D.C. 20503 (ATTN: NOAA Desk Officer). Comments sent by e-mail or the Internet will not be accepted.

FOR FURTHER INFORMATION CONTACT: Michael L. Grable, (301) 713–2390.

SUPPLEMENTARY INFORMATION:

Background

The President signed the AFA into law on October 20, 1998, as part of the Omnibus Appropriations Bill for fiscal year 1999 (Pub. L. 105–277). The AFA required the Federal Government to pay, not later than December 31, 1998, $90 million to the owners of nine large catcher processors harvesting OC pollock. In return, eight of these vessels had to stop all commercial fishing in the EEZ immediately and be scrapped by December 31, 2000. Although the ninth vessel did not have to be scrapped, it also had to stop all commercial fishing in the EEZ immediately and the owner had to certify that neither the owner nor anyone who purchased the vessel from the owner intended to use the vessel outside the EEZ to harvest any fish that also occur within the EEZ.

On December 30, 1998, NMFS paid the required amount to the owners of these vessels. In accordance with the AFA, NMFS paid $15 million of this amount from an AFA appropriation and the remaining $75 million from the proceeds of a fishing capacity reduction loan under sections 1111 and 1112 of Title XI of the Merchant Marine Act, 1936 (46 U.S.C. App. 1279f and g) (Title XI). The AFA requires the loan to be repaid by fees under section 312(d)(2)(C) of the Magnuson-Stevens Fishery Conservation and Management Act (16 U.S.C. 1861a(d)(2)(C)) (Magnuson-Stevens Act).

Upon payment of the $90 million, NMFS revoked all nine vessels' domestic fishing permits, one owner provided the certificate required for the ninth vessel, and the other owners began preparing for scrapping the remaining eight vessels. All eight vessels are presently undergoing scrapping. Scrapping is scheduled to be completed before December 31, 2000.

Under the AFA and section 312(d)(2)(C) of the Magnuson-Stevens Act, all vessel owners harvesting IC pollock (fish sellers) are required to pay the fee and all parties making the first ex-vessel purchase of IC pollock (fish buyers) are required to collect the fee and account for and forward the fee revenue to NMFS for the purpose of repaying the loan. The fish sellers pay, and the fish buyers collect, the fee when the fish buyers deduct the fee from the ex-vessel value of all IC pollock before paying the net ex-vessel value of the fish to the fish sellers.

The fee is six-tenths (0.6) of one cent for each pound, round-weight, of all IC pollock that fish sellers land. The AFA provides that fee payment and collection shall begin on or after January 1, 2000. Under this final rule, the fee must be paid and collected for all landed fish that were harvested after February 10, 2000.

Although the loan's scheduled maturity is 30 years, the AFA also provides that fee payment and collection ''shall * * * continue without interruption until such loan is fully repaid * * *'' (section 207(b)(2)). Whether the loan is repaid before, at, or after its scheduled maturity depends on when fee payment begins, the rate at which loan principal bears interest, annually determined total allowable pollock catches after December 31, 1999, and IC pollock allocations after December 31, 2004.

NMFS has determined the loan's principal will bear interest under the statutory formula at the rate of 7.09 percent per annum. Under the AFA, the loan's interest rate is 2 percent plus the percentage rate of interest that the U.S. Treasury charges NMFS for the $75 million that NMFS borrowed from the U.S. Treasury. The latter percentage rate is 5.09 percent.

The other variables controlling the time required to fully repay the loan are not presently determinable. Several assumptions are, consequently, necessary to project how long repayment will take. The first assumption involves the time at which fee payment begins. For projection purposes, NMFS assumes that the fee will be paid on all IC pollock harvested in calendar year 2000 and in each year thereafter until the loan is fully repaid. The second assumption involves the annual total allowable catch (TAC) of pollock after December 31, 1999, which

may vary from year to year. For projection purposes, NMFS assumes that the average annual TAC of pollock after December 31, 1999, will be the same as the average annual TAC of pollock over the 14-year period from the beginning of 1985 through end of 1998. This was 2.769 billion pounds, which equals 1.256 million metric tons. The third assumption involves IC pollock allocations after December 31, 2004. This depends on whether the North Pacific Fishery Management Council maintains IC pollock allocations after December 31, 2004, at the same level as IC pollock allocations under the AFA from January 1, 1999, to December 31, 2004. The AFA level is 42 percent of TAC. For the purposes of this projection, NMFS assumes that IC pollock allocations after December 31, 2004, will be at the same level as IC pollock allocations from January 1, 1999, to December 31, 2004.

Under these 3 assumptions, the loan will be repaid in 21 years. This is 9 years less than the loan's scheduled maturity. Actual conditions different than those NMFS assumes for the purpose of this projection may, however, cause loan repayment to occur sooner or later than here projected. Future TAC may be the biggest determinate of the time actually required to repay this loan.

Under this rule fee payment and collection begin on February 10, 2000 and continue without interruption until the loan is fully repaid, without regard to whether this is a period longer or shorter than the loan's scheduled maturity of 30 years.

On December 30, 1998, NMFS disbursed all $75 million of the loan's original principal amount. Interest at the rate of 7.09 percent per annum has been accruing since that date. NMFS will apply all fee receipts, first, to the payment of accrued interest and, second, to the reduction of loan principal.

Section 312(b)–(e) of the Magnuson-Stevens Act provides for fishing capacity reduction programs, which may be funded by loans under sections 1111 and 1112 of Title XI. Although the IC pollock loan is authorized by the AFA rather than by section 312(b)–(e) of the Magnuson-Stevens Act, the AFA specifies that the IC pollock loan is repayable under section 312(d)(2)(C) of the Magnuson-Stevens Act. NMFS has already proposed a framework rule for implementing section 312(b)–(e) of the Magnuson-Stevens Act (64 FR 6854, February 11, 1999). The proposed framework rule would establish detailed provisions for paying, collecting, disbursing, accounting for, and reporting about fees repaying fishing capacity reduction loans.

NMFS had hoped to implement the fishing capacity reduction framework rule before NMFS had to provide for payment and collection of the IC pollock fee. NMFS intended to provide for payment and collection of the IC pollock fee by making the loan subject to the framework rule provisions about fee payment and collection. Because NMFS has not yet adopted and promulgated the framework rule, however, NMFS must now separately provide for payment and collection of the IC pollock fee by adding a temporary subpart G to 50 CFR part 679 (subpart G). NMFS has drawn most of the procedural provisions of subpart G from the proposed framework rule. After a framework rule is adopted and promulgated, NMFS will revoke subpart G and concurrently provide, by a program implementation rule under the framework rule, for the continuing payment and collection of the IC pollock fee.

This action adds subpart G to 50 CFR part 679 establishing regulations to implement an inshore fee system for IC pollock. The proposed regulations which preceded this action were published on December 21, 1999 (64 FR 71396–71400), with a public comment period that ended on January 5, 2000.

NMFS received comments from 2 entities. The following summarizes the comments and gives NMFS' responses.

Comments and Responses

Comment 1: One comment questioned the necessity of setting up a separate account for the collected funds and suggested that fee payments be made from a regular corporate account.

Response: This is the first loan that will be repaid from fees generated by a fishery resource. We believe that it is important to the fish sellers who will repay this loan that we maintain the credibility of the collection process. Separate accounts are preferable because the fee receipts can be easily segregated from the fish buyer's normal cash flows. We also want to reduce the administrative costs of the loan collection process and separate accounts will make the audit process simpler and less expensive.

Comment 2: One comment asked if it would be possible for NMFS to be authorized to make regular wire transfer withdrawals from the separate account instead of the company sending in a check each month.

Response: We do not believe it is possible to set up a system whereby NMFS could make regular wire transfer withdrawals for several reasons. The amounts deposited in the accounts will differ from month to month. If the account was simply swept to zero, there would be no way to differentiate between funds deposited and interest earned. The contractual mechanism we set up with the bank would have to be turned on or off as the seasons begin and end. We would also encounter administrative difficulties in making separate contractual agreements with the different banks used by the companies. Finally, the rule requires the fish buyer to provide a settlement sheet tied to the amount of money transferred. This would not be possible if the account was periodically swept.

Comment 3: One comment questioned whether deposits into the separate account have to be made on a weekly basis or could be made biweekly or monthly.

Response: As we discussed in our first response, it was incumbent upon us to set up a credible system to assure the fish sellers that their payments were applied against the loan accurately and on a timely basis. One way of achieving this credibility was to set up a system that segregates the collected funds from the fish buyer's normal cash flow. Ideally, such a system should require daily deposits. We attempted to be sympathetic to operational problems daily deposits would create for the fish buyers by allowing weekly deposits.

Comment 4: One comment suggested a 5-day grace period before late payment penalties would be imposed.

Response: NMFS has amended § 679.64 of the final rule to allow a 5-day grace period before late charges will accrue.

Comment 5: One comment suggested a 2-week grace period for submission of the annual report.

Response: NMFS has amended section 679.63 of the final rule by making the due date January 15, thereby providing a 2-week grace period after year end.

Comment 6: One comment questioned the meaning of the term ''business week'' for fee collection purposes, since the fishing industry does not operate on a normal Monday to Friday ''business week''.

Response: NMFS has added a definition of ''business week'' in § 679.60 which designates Friday as the end of a business week.

Comment 7: One comment involved the effective date of the fee collection and suggested that fees should be paid for all inshore pollock harvested in 2000, regardless of when the fee system becomes effective.

Response: NMFS is not authorized to collect any fees until this rule is

finalized. Although we made our best effort to have the system in place before the FY 2000 season starts, we were unable to do so.

Comment 8: One comment sought the clarification of the rule to indicate that the fee and any future appropriations would be the exclusive source of loan repayment.

Response: The proposed rule states that the fee shall be the exclusive source of loan prepayment. Future appropriations could over ride this.

Comment 9: One comment suggested that any late charge or penalty should be the responsibility of the fish buyer.

Response: NMFS agrees that the fish seller should not be obligated for any late charges and has added language in section 679.64 to clarify this point.

Comment 10: One comment objected to the possibility that fish buyers may earn interest on fees paid by fish sellers.

Response: State law may or may not permit such accounts to earn interest. If the accounts can earn interest, the time limitations on transferring the funds to the Government's lock box will allow for minimal interest accrual. Nevertheless, the fish buyers collecting will incur administrative expenses in the process. Any interest earned by fish buyers would help defray the administrative costs incurred.

Summary of Revisions

The following sections of this final rule revise the proposed rule:

(1) *Section 679.60*. This section has been amended to include a definition of ''business week'' which designates Friday as the end of a business week.

(2) *Section 679.61*. This section is revised to state the loan's actual interest rate.

(3) *Section 600.63*. This section is revised to change the due date for the annual report from December 31 to January 15, thereby effectively providing a 2-week grace period for submission of the annual report.

(4) *Section 679.64*. This section is revised to provide for a 5-day grace period before late charges will accrue and to clarify that fish sellers should not be obligated for any late charges.

The final rule further revises the proposed rule to increase brevity, clarity, accuracy, and/or sufficiency.

Classification

The Assistant Administrator for Fisheries (AA), NMFS, determined that this final rule is consistent with the AFA, the Magnuson-Stevens Act, Title XI, and other applicable laws.

This final rule has been determined to be not significant for purposes of Executive Order 12866.

NMFS prepared a Final Regulatory Flexibility Analysis (FRFA) describing the impact of the action on small entities. In summary, the FRFA states that the rule would apply to about 100 fish sellers and about eight fish buyers. All of the fish sellers are small entities; none of the fish buyers are. The FRFA indicates that the average annual fee expense for each fish seller would likely be about $60,000. Recordkeeping and reporting requirements would fall primarily on the fish buyers, who collect the fee. The estimated annual compliance cost to fish buyers is about $5,568 per fish buyer. Several minimal recordkeeping and reporting requirements also apply to fish sellers. A fish seller must, for example, report to NMFS if a fish buyer refuses to collect the fee. The estimated compliance cost of this requirement is about $25 per report. In specific and limited circumstances when a fish seller becomes a *de facto* fish buyer for recordkeeping and reporting requirements, the estimated compliance cost is the same as a fish buyer's compliance cost. The Paperwork Reduction Act (PRA) discussion further details these costs. This final rule does not duplicate or conflict with any other Federal rules of which NMFS is aware.

In the FRFA, NMFS considered two alternatives that might have lessened the economic impact on small entities. These alternatives were not collecting the fee and delaying fee collection. Not collecting the fee would both cost the Nation $75 million and violate the AFA. Delaying fee collection would increase the ultimate cost to fish sellers because interest would continue to accrue on an unreduced $75 million principal balance. It would also prolong the time required for fish sellers to repay the loan because the AFA requires that the fee system remain in effect until the loan is fully repaid. The FRFA further discusses these alternatives and their economic impact on IC pollock fish sellers and fish buyers. Although no comments on the IRFA were received, public comments led to changes from the proposed rule that we believe will benefit affected entities, e.g., grace periods for submission of late charges and the annual report.

The AA determined that there is good cause to waive the 30-day delay in effectiveness for this rule under 5 U.S.C. 553 (d)(3). While the AFA stipulates that an inshore pollock fee collection system be established by January 1, 2000, or thereafter, it is important to begin collecting the fee as early in the fishing season (which begins January 20, 2000) as possible, to avoid confusion, to treat all landings similarly, and to minimize the accumulation of interest on the $75 million loan. Therefore, the rule must be in effect as soon as practicable. NMFS believes that persons needing to comply with this rule should be afforded 7 calendar days to open accounts and otherwise prepare for the fee collection. The affected inshore fleet has been aware of the imposition of this fee in exchange for the buyout of certain factory trawlers for an allocation of catch since October 1998 when the AFA was enacted. Delaying this rule beyond 7 days after publication would be contrary to the public interest and unnecessary.

Notwithstanding any other provision of law, no person is required to respond to nor shall a person be subject to a penalty for failure to comply with a collection of information subject to the PRA requirements unless that collection of information displays a currently valid OMB Control Number.

This final rule contains collection of information requirements subject to the PRA that have been approved by OMB under OMB Control Number 0648–0376. This PRA approval occurred in connection with proposal of the framework rule for implementing section 312(b)–(e) of the Magnuson-Stevens Act, including a collection of information burden for fee payment, collection, disbursement, accounting, and reporting under section 312(d)(2)(C) of the Magnuson-Stevens Act. The AFA provides that payment and collection of the IC pollock fee shall be in accordance with 312(d)(2)(C) of the Magnuson-Stevens Act.

The estimated response times for this collection of information are: 10 minutes per fishing trip to maintain records on transactions, 2 hours per fish buyer's monthly report, 4 hours per fish buyer's annual report, and 2 hours per fish buyer's or fish seller's report about fish sellers who refuse to pay, or fish buyers who refuse to collect, the fee.

These estimated response times include the time needed for reviewing instructions, searching existing data sources, gathering and maintaining the data needed, and completing and revising the collection of information.

Send comments regarding this burden estimate or any other aspect of this collection of information, including suggestions for reducing this burden, to NMFS (see **ADDRESSES**) and to OMB (see **ADDRESSES**).

List of Subjects in 50 CFR Part 679

Alaska, Fisheries, Reporting and recordkeeping requirements.

Dated: January 28, 2000.

Penelope D. Dalton,

Assistant Administrator for Fisheries, National Marine Fisheries Services.

For the reasons set out in the preamble, 50 CFR part 679 is amended as follows:

1. The authority citation for 50 CFR part 679 continues to read as follows:

Authority: 16 U.S.C. 773 *et seq.*, 1801 *et seq.*, and 3631 *et seq.*

2. In § 679.1, a paragraph (k) is added to read as follows:

§ 679.1 Purpose and scope.

* * * * *

(k) This part also governs payment and collection of the loan, under the American Fisheries Act (AFA), the Magnuson-Stevens Act, and Title XI of the Merchant Marine Act, 1936, made to all persons who harvest pollock from the directed fishing allowance allocated to the inshore component under section 206(b)(1) of the AFA.

3. A subpart G is added to read as follows:

PART 679–-FISHERIES OF THE EXCLUSIVE ECONOMIC ZONE OFF ALASKA

Subpart G–-Inshore Fee System for Repayment of the Loan to Harvesters of Pollock from the Directed Fishing Allowance Allocated to the Inshore Component Under Section 206(b)(1) of the AFA.

Sec.
679.60 Definitions.
679.61 Loan.
679.62 Fee payment and collection.
679.63 Fee collection deposits, disbursements, records, and reports.
679.64 Late charges.
679.65 Enforcement.
679.66 Prohibitions and penalties.

Subpart G—Inshore Fee System for Repayment of the Loan to Harvesters of Pollock from the Directed Fishing Allowance Allocated to the Inshore Component Under Section 206(b)(1) of the AFA.

Authority: Pub. L. 105–277, 16 U.S.C. 1801, *et seq.*

§ 679.60 Definitions.

In addition to the definitions in the Magnuson-Stevens Act and in § 679.1 of this title, the terms used in this subpart have the following meanings:

American Fisheries Act (AFA) means Title II of Pub.L. 105–277.

Borrower means (individually and collectively) all persons who, after January 1, 2000, harvest fee fish from the IC directed fishing allowance.

Business week means a 7-day period, Saturday through Friday.

Delivery value means the gross ex-vessel value of all fee fish at fish delivery.

Deposit principal means all collected fee revenue that a fish buyer deposits in a segregated deposit account maintained in a federally chartered national bank for the sole purpose of aggregating collected fee revenue before sending the fee revenue to NMFS for repaying the loan.

Fee means the six-tenths (0.6) of one cent that fish buyers deduct at fish delivery from the delivery value of each pound of round weight fee fish.

Fee fish means all pollock harvested from the IC directed fishing allowance beginning on February 10, 2000 and ending at such time as the loan's principal and interest are fully repaid.

Fish buyer means the first ex-vessel fish buyer who purchases fee fish from a fish seller.

Fish delivery means the point at which a fish buyer first takes delivery or possession of fee fish from a fish seller.

Fish seller means the harvester who catches and first sells fee fish to a fish buyer.

IC directed fishing allowance means the directed fishing allowance allocated to the inshore component under section 206(b)(1) of the AFA.

Loan means the loan authorized by section 207(a) of the AFA.

Net delivery value means the delivery value minus the fee.

Subaccount means the Inshore Component Pollock Subaccount of the Fishing Capacity Reduction Fund in the U.S. Treasury for the deposit of all funds involving the loan.

§ 679.61 Loan.

(a) *Principal amount.* The loan's principal amount is $75,000,000 (seventy five million dollars).

(b) *Interest.* Interest shall, from December 30, 1998, when NMFS disbursed the loan, until the date the borrower fully repays the loan, accrue at a fixed rate of 7.09 percent. Interest shall be simple interest and shall accrue on the basis of a 365-day year.

(c) *Repayment.* The fee shall be the exclusive source of loan repayment. The fee shall be paid on all fee fish.

(d) *Application of fee receipts.* NMFS shall apply all fee receipts it receives, first, to payment of the loan's accrued interest and, second, to reduction of the loan's principal balance.

(e) *Obligation.* The borrower shall repay the loan in accordance with the AFA and this subpart.

§ 679.62 Fee payment and collection.

(a) *Payment and collection.* (1) The fee is due and payable at the time of fish delivery. Each fish buyer shall collect the fee at the time of fish delivery by deducting the fee from the delivery value before paying or promising later to pay the net delivery value. Each fish seller shall pay the fee at the time of fish delivery by receiving from the fish buyer the net delivery value or the fish buyer's promise later to pay the net delivery value rather than the delivery value. Regardless of when the fish buyer pays the net delivery value, the fish buyer shall collect the fee at the time of fish delivery;

(2)(i) Each fish seller shall be deemed, for the purpose of the fee collection, deposit, disbursement, and accounting requirements of this subpart, to be both the fish seller and the fish buyer—and all requirements and penalties under this subpart applicable to both a fish seller and a fish buyer shall equally apply to the fish seller—each time that the fish seller sells fee fish to:

(A) Any fish buyer whose place of business is not located in the United States, who does not take delivery or possession of the fee fish in the United States, who is not otherwise subject to this subpart, or to whom or against whom NMFS cannot otherwise apply or enforce this subpart,

(B) Any fish buyer who is a general food-service wholesaler or supplier, a restaurant, a retailer, a consumer, some other type of end-user, or some other fish buyer not engaged in the business of buying fish from fish sellers for the purpose of reselling the fish, or

(C) Any other fish buyer who the fish seller has good reason to believe is a fish buyer not subject to this subpart or to whom or against whom NMFS cannot otherwise apply or enforce this subpart,

(ii) In each such case the fish seller shall, with respect to the fee fish involved in each such case, discharge, in addition to the fee payment requirements of this subpart, all the fee collection, deposit, disbursement, accounting, recordkeeping, and reporting requirements that this subpart otherwise imposes on the fish buyer, and the fish seller shall be subject to all the penalties this subpart provides for a fish buyer's failure to discharge such requirements;

(b) *Notification.* (1) NMFS will send an appropriate fee payment and collection commencement notification to each affected fish seller and fish buyer of whom NMFS has knowledge.

(2) When NMFS determines that the loan is fully repaid, NMFS will publish a **Federal Register** notification that the fee is no longer in effect and should no

longer be either paid or collected. NMFS will then also send an appropriate fee termination notification to each affected fish seller and fish buyer of whom NMFS has knowledge;

(c) *Failure to pay or collect.* (1) If a fish buyer refuses to collect the fee in the amount and manner that this subpart requires, the fish seller shall then advise the fish buyer of the fish seller's fee payment obligation and of the fish buyer's fee collection obligation. If the fish buyer still refuses to properly collect the fee, the fish seller, within the next 7 calendar days, shall forward the fee to NMFS. The fish seller at the same time shall also advise NMFS in writing of the full particulars, including:

(i) The fish buyer's and fish seller's name, address, and telephone number,

(ii) The name of the fishing vessel from which the fish seller made fish delivery and the date of doing so,

(iii) The quantity and delivery value of fee fish that the fish seller delivered, and

(iv) The fish buyer's reason (if known) for refusing to collect the fee in accordance with this subpart;

(2) If a fish seller refuses to pay the fee in the amount and manner that this subpart requires, the fish buyer shall then advise the fish seller of the fish buyer's collection obligation and of the fish seller's payment obligation. If the fish seller still refuses to pay the fee, the fish buyer shall then either deduct the fee from the delivery value over the fish seller's protest or refuse to buy the fee fish. The fish buyer shall also, within the next 7 calendar days, advise NMFS in writing of the full particulars, including:

(i) The fish buyer's and fish seller's name, address, and telephone number,

(ii) The name of the fishing vessel from which the fish seller made or attempted to make fish delivery and the date of doing so,

(iii) The quantity and delivery value of fee fish the fish seller delivered or attempted to deliver,

(iv) Whether the fish buyer deducted the fee over the fish seller's protest or refused to buy the fee fish, and

(v) The fish seller's reason (if known) for refusing to pay the fee in accordance with this subpart.

§ 679.63 Fee collection deposits, disbursements, records, and reports.

(a) *Deposit accounts.* Each fish buyer that this subpart requires to collect a fee shall maintain a segregated account at a federally insured financial institution for the sole purpose of depositing collected fee revenue and disbursing the fee revenue directly to NMFS in accordance with paragraph (c) of this section.

(b) *Fee collection deposits.* Each fish buyer, no less frequently than at the end of each business week, shall deposit, in the deposit account established under paragraph (a) of this section, all fee revenue, not previously deposited, that the fish buyer has collected through a date not more than 2 calendar days before the date of deposit. Neither the deposit account nor the principal amount of deposits in the account may be pledged, assigned, or used for any purpose other than aggregating collected fee revenue for disbursement to the subaccount in accordance with paragraph (c) of this section. The fish buyer is entitled, at any time, to withdraw deposit interest, if any, but never deposit principal, from the deposit account for the fish buyer's own use and purposes.

(c) *Deposit principal disbursement.* On the last business day of each month, or more frequently if the amount in the account exceeds the account limit for insurance purposes, the fish buyer shall disburse to NMFS the full amount of deposit principal then in the deposit account. The fish buyer shall do this by check made payable to ''NOAA Inshore Component Pollock Loan Subaccount.'' The fish buyer shall mail each such check to the subaccount lockbox account that NMFS establishes for the receipt of the disbursements of deposit principal. Each disbursement shall be accompanied by the fish buyer's settlement sheet completed in the manner and form that NMFS specifies. NMFS will specify the subaccount's lockbox and the manner and form of settlement sheet by means of the notification in § 679.62(b)(1).

(d) *Records maintenance.* Each fish buyer shall maintain, in a secure and orderly manner for a period of at least 3 years from the date of each transaction involved, at least the following information:

(1) For all deliveries of fee fish that the fish buyer buys from each fish seller:

(i) The date of delivery,

(ii) The fish seller's identity,

(iii) The round weight of fee fish delivered,

(iv) The identity of the fishing vessel that delivered the fee fish,

(v) The delivery value,

(vi) The net delivery value,

(vii) The identity of the party to whom the net delivery value is paid, if other than the fish seller,

(viii) The date the net delivery value was paid, and

(ix) The total fee amount collected;

(2) For all fee collection deposits to and disbursements from the deposit account:

(i) The dates and amounts of deposits,

(ii) The dates and amounts of disbursements to the subaccount's lockbox account, and

(iii) The dates and amounts of disbursements to the fish buyer or other parties of interest earned on deposits.

(e) *Annual report.* By January 15, 2001, and by each January 15 thereafter until the loan is fully repaid, each fish buyer shall submit to NMFS a report, on or in the form NMFS specifies, containing the following information for the preceding year for all fee fish each fish buyer purchases from fish sellers:

(1) Total round weight bought;

(2) Total delivery value paid;

(3) Total fee amount collected;

(4) Total fee collection amounts deposited by month;

(5) Dates and amounts of monthly disbursements to the subaccount lockbox;

(6) Total amount of interest earned on deposits; and

(7) Depository account balance at year-end.

(f) *State records.* If landing records that a state requires from fish sellers contain some or all of the data that this section requires and state confidentiality laws or regulations do not prevent NMFS' access to the records maintained for the state, then fish buyers can use such records to meet appropriate portions of this section's recordkeeping requirements. If, however, state confidentiality laws or regulations make such records unavailable to NMFS, then fish buyers shall maintain separate records for NMFS that meet the requirements of this section.

(g) *Audits.* NMFS or its agents may audit, in whatever manner NMFS believes reasonably necessary for the duly diligent administration of the loan, the financial records of the fish buyers and the fish sellers in order to ensure proper fee payment, collection, deposit, disbursement, accounting, recordkeeping, and reporting. Fish buyers and fish sellers shall make all records of all transactions involving fee fish catches, fish deliveries, and fee payments, collections, deposits, disbursements, accounting, recordkeeping, and reporting available to NMFS or its agents at reasonable times and places and promptly provide all requested information reasonably related to these records that such fish sellers and fish buyers may otherwise lawfully provide. Trip tickets (or similar accounting records establishing the round weight pounds of fee fish that each fish buyer buys from each fish seller each time that each fish buyer does so) are essential audit documentation.

(h) *Confidentiality of records*. NMFS and its auditing agents shall maintain the confidentiality of all data to which NMFS has access under this section and shall neither release the data nor allow the data's use for any purpose other than the purpose of this subpart, unless otherwise required by law; provided, however, that NMFS may aggregate such data so as to preclude their identification with any fish buyer or any fish seller and use them in the aggregate for other purposes.

(i) *Refunds*. When NMFS determines that the loan is fully repaid, NMFS will refund any excess fee receipts, on a last-in/first-out basis, to the fish buyers. Fish buyers shall return the refunds, on a last-in/first-out basis, to the fish sellers who paid the amounts refunded.

§ 679.64 Late charges.

The late charge to fish buyers for fee payment, collection, deposit, and/or disbursement shall be one and one-half (1.5) percent per month, or the maximum rate permitted by state law, for the total amount of the fee not paid, collected, deposited, and/or disbursed when due to be paid, collected, deposited, and/or disbursed within 5 days of the date due. The full late charge shall apply to the fee for each month or portion of a month that the fee remains unpaid, uncollected, undeposited, and/or undisbursed.

§ 679.65 Enforcement.

In accordance with applicable law or other authority, NMFS may take appropriate action against each fish seller and/or fish buyer responsible for non-payment, non-collection, non-deposit, and/or non-disbursement of the fee in accordance with this subpart to enforce the collection from such fish seller and/or fish buyer of any fee (including penalties and all costs of collection) due and owing the United States on account of the loan that such fish seller and/or fish buyer should have, but did not, pay, collect, deposit, and/or disburse in accordance with this subpart. All such loan recoveries shall be applied to reduce the unpaid balance of the loan.

§ 679.66 Prohibitions and penalties.

(a) The following activities are prohibited, and it is unlawful for anyone to:

(1) Avoid, decrease, interfere with, hinder, or delay payment or collection of, or otherwise fail to fully and properly pay or collect, any fee due and payable under this subpart or convert, or otherwise use for any purpose other than the purpose this subpart intends, any paid or collected fee;

(2) Fail to fully and properly deposit on time the full amount of all fee revenue collected under this subpart into a deposit account and disburse the full amount of all deposit principal to the subaccount's lockbox account—all as this subpart requires;

(3) Fail to maintain full, timely, and proper fee payment, collection, deposit, and/or disbursement records or make full, timely, and proper reports of such information to NMFS–-all as this subpart requires;

(4) Fail to advise NMFS of any fish seller's refusal to pay, or of any fish buyer's refusal to collect, any fee due and payable under this subpart;

(5) Refuse to allow NMFS or agents that NMFS designates to review and audit at reasonable times all books and records reasonably pertinent to fee payment, collection, deposit, disbursement, and accounting under this subpart or otherwise interfere with, hinder, or delay NMFS or it agents in the course of their activities under this subpart;

(6) Make false statements to NMFS, any of the NMFS' employees, or any of NMFS' agents about any of the matters in this subpart;

(7) Obstruct, prevent, or unreasonably delay or attempt to obstruct, prevent, or unreasonably delay any audit or investigation NMFS or its agents conduct, or attempt to conduct, in connection with any of the matters in this subpart; and/or

(8) Otherwise materially interfere with the efficient and effective repayment of the loan.

(b) Anyone who violates one or more of the prohibitions of paragraph (a) of this section is subject to the full range of penalties the Magnuson-Stevens Act and 15 CFR part 904 provide (including, but not limited to: civil penalties, sanctions, forfeitures, and punishment for criminal offenses) and to the full penalties and punishments otherwise provided by any other applicable law of the United States.

[FR Doc. 00–2284 Filed 2–2–00; 8:45 am]

BILLING CODE 3510–22–F

DEPARTMENT OF COMMERCE

National Oceanic and Atmospheric Administration

50 CFR Part 679

[Docket No. 000119015–0015–01; I.D. 012700E]

Fisheries of the Exclusive Economic Zone Off Alaska; Pollock in Statistical Area 620 of the Gulf of Alaska

AGENCY: National Marine Fisheries Service (NMFS), National Oceanic and Atmospheric Administration (NOAA), Commerce.

ACTION: Closure.

SUMMARY: NMFS is prohibiting directed fishing for pollock in Statistical Area 620 outside the Shelikof Strait conservation area in the Gulf of Alaska (GOA). This action is necessary to prevent exceeding the interim 2000 pollock total allowable catch (TAC) for Statistical Area 620 outside the Shelikof Strait conservation area established by the 2000 Interim Specifications and amended by the emergency interim rule implementing Steller sea lion protection measures for the pollock fisheries off Alaska.

DATES: Effective 1200 hrs, Alaska local time (A.l.t.), January 28, 2000, until 1200 hrs, A.l.t., March 15, 2000.

FOR FURTHER INFORMATION CONTACT: Andrew Smoker, 907–586–7228.

SUPPLEMENTARY INFORMATION: NMFS manages the groundfish fishery in the GOA exclusive economic zone according to the Fishery Management Plan for Groundfish of the Gulf of Alaska (FMP) prepared by the North Pacific Fishery Management Council under authority of the Magnuson-Stevens Fishery Conservation and Management Act. Regulations governing fishing by U.S. vessels in accordance with the FMP appear at subpart H of 50 CFR part 600 and 50 CFR part 679.

The interim 2000 pollock TAC in Statistical Area 620 outside the Shelikof Strait conservation area as amended by the emergency interim rule implementing Steller sea lion protection measures for the pollock fisheries off Alaska (65 FR 3892, January 25, 2000) is 3,252 metric tons (mt), determined in accordance with § 679.20(c)(2)(i).

In accordance with § 679.20(d)(1)(i), the Administrator, Alaska Region, NMFS (Regional Administrator), has determined that the interim TAC of pollock in Statistical Area 620 outside the Shelikof Strait conservation area will soon be reached. Therefore, the Regional Administrator is establishing a

directed fishing allowance of 2,752 mt, and is setting aside the remaining 500 mt as bycatch to support other anticipated groundfish fisheries. In accordance with § 679.20(d)(1)(iii), the Regional Administrator finds that this directed fishing allowance will soon be reached. Consequently, NMFS is prohibiting directed fishing for pollock in Statistical Area 620 outside the Shelikof Strait conservation area in the GOA.

Maximum retainable bycatch amounts may be found in the regulations at § 679.20(e) and (f).

Classification

This action responds to the best available information recently obtained from the fishery. It must be implemented immediately to prevent overharvesting the seasonal allocation of pollock in Statistical Area 620 outside the Shelikof Strait conservation area. Providing prior notice and an opportunity for public comment is impracticable and contrary to the public interest. Further delay would only result in overharvest. NMFS finds for good cause that the implementation of this action should not be delayed for 30 days. Accordingly, under 5 U.S.C. 553(d), a delay in the effective date is hereby waived.

This action is required by § 679.20 and is exempt from review under E.O. 12866.

Authority: 16 U.S.C. 1801 *et seq.*

Dated: January 28, 2000.

Bruce C. Morehead,

Acting Director, Office of Sustainable Fisheries, National Marine Fisheries Service.

[FR Doc. 00–2323 Filed 1–28–00; 5:02 pm]

BILLING CODE 3510–22–F

DEPARTMENT OF COMMERCE

National Oceanic and Atmospheric Administration

50 CFR Part 679

[Docket No. 99991223349–9349–01; I.D. 012800D]

Fisheries of the Exclusive Economic Zone Off Alaska; Fishing Vessels Greater Than 99 feet LOA Catching Pollock for Processing by the Inshore Component Independently of a Cooperative in the Bering Sea

AGENCY: National Marine Fisheries Service (NMFS), National Oceanic and Atmospheric Administration (NOAA), Commerce.

ACTION: Closure.

SUMMARY: NMFS is prohibiting directed fishing for pollock by vessels greater than 99 ft length overall (LOA) catching pollock independently of a fishing cooperative for processing by the inshore component in the Steller sea lion conservation area (SCA) of the Bering Sea and Aleutian Islands management area (BSAI). This action is necessary because the interim A season inside SCA allocation of pollock total allowable catch (TAC) specified for the vessels greater than 99 ft LOA within the SCA catching pollock independently of a fishing cooperative will be reached.

DATES: Effective 1200 hrs, Alaska local time (A.l.t.), January 30, 2000, until 1200 hrs, A.l.t., April 1, 2000.

FOR FURTHER INFORMATION CONTACT: Andrew Smoker, 907–586-7228.

SUPPLEMENTARY INFORMATION: NMFS manages the groundfish fishery in the BSAI according to the Fishery Management Plan for the Groundfish Fishery of the Bering Sea and Aleutian Islands Area (FMP) prepared by the North Pacific Fishery Management Council under authority of the Magnuson-Stevens Fishery Conservation and Management Act. Regulations governing fishing by U.S. vessels in accordance with the FMP appear at subpart H of 50 CFR part 600 and 50 CFR part 679.

In accordance with § 679.20(a)(5)(i)(C)(2), § 679.20 (a)(5)(i)(D)(*3*), and the revised interim 2000 TAC amounts for pollock in the Bering Sea subarea (65 FR 4520, January 28, 2000) the A season allocation of TAC specified to the sector of the inshore component fishing independently of a cooperative for harvest within the SCA is 5,027 metric tons (mt).

In accordance with § 679.22(a)(11)(iv)(A) and (D)(*2*) the Administrator, Alaska Region, NMFS (Regional Administrator), has determined that the A season allocation of pollock TAC specified to the inshore sector fishing for pollock independently of a cooperative for harvest within the SCA will be reached. The Regional Administrator has estimated that 1,000 mt is likely to be harvested by catcher vessels less than or equal to 99 ft LOA fishing independently of a cooperative during the remainder of the A season and is reserving that amount to accommodate fishing by such vessels after the closure of the SCA to vessels greater than 99 ft LOA fishing independently of a cooperative.

Consequently, NMFS is prohibiting directed fishing for pollock by vessels greater than 99 ft LOA fishing independently of a cooperative that are catching pollock for processing by the inshore component in the SCA, as defined at § 679.22(a)(11)(iv).

Maximum retainable bycatch amounts may be found in the regulations at § 679.20(e) and (f).

Classification

This action responds to the best available information recently obtained from the fishery. It must be implemented immediately in order to prevent exceeding the A season allocation of pollock TAC specified to the sector fishing independently of a cooperative for harvest within the SCA. A delay in the effective date is impracticable and contrary to the public interest. Further delay would result in noncompliance with reasonable and prudent management measures implemented to promote the recovery of the endangered Steller sea lion. NMFS finds for good cause that the implementation of this action can not be delayed for 30 days. Accordingly, under 5 U.S.C. 553(d), a delay in the effective date is hereby waived.

This action is required by § 679.22 and is exempt from review under E.O. 12866.

Authority: 16 U.S.C. 1801 *et seq.*

Dated: January 28, 2000.

Bruce C. Morehead,

Acting Director, Office of Sustainable Fisheries, National Marine Fisheries Service.

[FR Doc. 00–2322 Filed 1–31–00; 9:48 am]

BILLING CODE 3510–22–F

DEPARTMENT OF COMMERCE

National Oceanic and Atmospheric Administration

50 CFR Part 679

[Docket No. 991223349–9349–01; I.D. 012800E]

Fisheries of the Exclusive Economic Zone Off Alaska; Atka

Mackerel in the Eastern Aleutian District and Bering Sea Subarea of the Bering Sea and Aleutian Islands

AGENCY: National Marine Fisheries Service (NMFS), National Oceanic and Atmospheric Administration (NOAA), Commerce.

ACTION: Closure.

SUMMARY: NMFS is prohibiting directed fishing for Atka mackerel with gears other than jig in the Eastern Aleutian District and the Bering Sea subarea of the Bering Sea and Aleutian Islands management area (BSAI). This action is

necessary to prevent exceeding the 2000 interim total allowable catch (ITAC) of Atka mackerel in these areas.

DATES: Effective 1200 hrs, Alaska local time, January 29, 2000, until superseded by the notice of Final 2000 Harvest Specification for Groundfish, which will be published in the **Federal Register**.

FOR FURTHER INFORMATION CONTACT: Mary Furuness, 907–586-7228.

SUPPLEMENTARY INFORMATION: NMFS manages the groundfish fishery in the BSAI exclusive economic zone according to the Fishery Management Plan for the Groundfish Fishery of the Bering Sea and Aleutian Islands Area (FMP) prepared by the North Pacific Fishery Management Council under authority of the Magnuson-Stevens Fishery Conservation and Management Act. Regulations governing fishing by U.S. vessels in accordance with the FMP at subpart H of 50 CFR part 600 and CFR part 679.

In accordance with § 679.20(d)(1)(i), the Administrator, Alaska Region, NMFS (Regional Administrator), has determined that the ITAC for non-jig gear Atka mackerel in the Eastern Aleutian District and the Bering Sea subarea will be reached. Therefore, the Regional Administrator is establishing a directed fishing allowance of 6,653 mt, and is setting aside the remaining 500 mt as bycatch to support other anticipated groundfish fisheries. In accordance with § 679.20(d)(1)(iii), the Regional Administrator finds that this directed fishing allowance soon will be reached. Consequently, NMFS is prohibiting directed fishing for Atka mackerel in the Eastern Aleutian District and the Bering Sea subarea of the BSAI.

Maximum retainable bycatch amounts may be found in the regulations at § 679.20(e) and (f).

Classification

This action responds to the ITAC limitations and other restrictions on the fisheries established in the Interim 2000 Harvest Specifications for Groundfish for the BSAI. It must be implemented immediately to prevent overharvesting the 2000 ITAC of Atka mackerel in the Eastern Aleutian District and the Bering Sea subarea of the BSAI. A delay in the effective date is impracticable and contrary to the public interest. Further delay would only result in overharvest. NMFS finds for good cause that the implementation of this action should not be delayed for 30 days. Accordingly, under 5 U.S.C. 553(d), a delay in the effective date is hereby waived.

This action is required by § 679.20 and is exempt from review under E.O. 12866.

Authority: 16 U.S.C. 1801 *et seq.*

Dated: January 28, 2000.

Bruce C. Morehead,

Acting Director, Office of Sustainable Fisheries, National Marine Fisheries Service.

[FR Doc. 00–2321 Filed 1–28–00; 5:02 pm]

BILLING CODE 3510–22–F

DEPARTMENT OF COMMERCE

National Oceanic and Atmospheric Administration

50 CFR Part 679

[Docket No. 000119015–0015–01; I.D. 012800B]

Fisheries of the Exclusive Economic Zone Off Alaska; Pollock in Statistical Area 610 of the Gulf of Alaska

AGENCY: National Marine Fisheries Service (NMFS), National Oceanic and Atmospheric Administration (NOAA), Commerce.

ACTION: Closure.

SUMMARY: NMFS is prohibiting directed fishing for pollock in Statistical Area 610 of the Gulf of Alaska (GOA). This action is necessary to prevent exceeding the interim 2000 pollock total allowable catch (TAC) for Statistical Area 610 established by the 2000 Interim Specifications and amended by the emergency interim rule implementing Steller sea lion protection measures for the pollock fisheries off Alaska.

DATES: Effective 1200 hrs, Alaska local time (A.l.t.), January 31, 2000, until 1200 hrs, A.l.t., March 15, 2000.

FOR FURTHER INFORMATION CONTACT: Andrew Smoker, 907–581–2062.

SUPPLEMENTARY INFORMATION: NMFS manages the groundfish fishery in the GOA exclusive economic zone according to the Fishery Management Plan for Groundfish of the Gulf of Alaska (FMP) prepared by the North Pacific Fishery Management Council under authority of the Magnuson-Stevens Fishery Conservation and Management Act. Regulations governing fishing by U.S. vessels in accordance with the FMP appear at subpart H of 50 CFR part 600 and 50 CFR part 679.

The interim 2000 pollock TAC in Statistical Area 610 as amended by the emergency interim rule implementing Steller sea lion protection measures for the pollock fisheries off Alaska (65 FR 3892, January 25, 2000) is 5,465 metric tons (mt), determined in accordance with § 679.20(c)(2)(i).

In accordance with § 679.20(d)(1)(i), the Administrator, Alaska Region, NMFS (Regional Administrator), has determined that the interim TAC of pollock in Statistical Area 610 will soon be reached. Therefore, the Regional Administrator is establishing a directed fishing allowance of 4,965 mt, and is setting aside the remaining 500 mt as bycatch to support other anticipated groundfish fisheries. In accordance with § 679.20(d)(1)(iii), the Regional Administrator finds that this directed fishing allowance will soon be reached. Consequently, NMFS is prohibiting directed fishing for pollock in Statistical Area 610 of the GOA.

Maximum retainable bycatch amounts may be found in the regulations at § 679.20(e) and (f).

Classification

This action responds to the best available information recently obtained from the fishery. It must be implemented immediately to prevent overharvesting the seasonal allocation of pollock in Statistical Area 610. Providing prior notice and an opportunity for public comment is impracticable and contrary to the public interest. Further delay would only result in overharvest. NMFS finds for good cause that the implementation of this action should not be delayed for 30 days. Accordingly, under 5 U.S.C. 553(d), a delay in the effective date is hereby waived.

This action is required by § 679.20 and is exempt from review under E.O. 12866.

Authority: 16 U.S.C. 1801 *et seq.*

Dated: January 28, 2000.

Bruce C. Morehead,

Acting Director, Office of Sustainable Fisheries, National Marine Fisheries Service.

[FR Doc. 00–2320 Filed 1–31–00; 9:48 am]

BILLING CODE 3510–22–F

Proposed Rules

Federal Register

Vol. 65, No. 23

Thursday, February 3, 2000

This section of the FEDERAL REGISTER contains notices to the public of the proposed issuance of rules and regulations. The purpose of these notices is to give interested persons an opportunity to participate in the rule making prior to the adoption of the final rules.

FARM CREDIT ADMINISTRATION

12 CFR Part 611

RIN 3052–AB86

Organization; Termination of Farm Credit Status

AGENCY: Farm Credit Administration.

ACTION: Proposed rule; supplemental and extension of comment period.

SUMMARY: We are publishing a sample exit fee calculation for a hypothetical Farm Credit System (FCS, Farm Credit or System) bank or association choosing to terminate its Farm Credit status. The purpose of this supplement is to guide FCS institutions through the exit fee calculation described in our proposed termination rule. We are also extending the comment period for the proposed termination rule.

DATES: Please send your comments to us on or before March 6, 2000. The comment period for the proposed rule (64 FR 60370, November 5, 1999) is extended to March 6, 2000.

ADDRESSES: We encourage you to send comments via electronic mail to ''reg-comm@fca.gov'' or through the Pending Regulations section of our interactive website at ''www.fca.gov.'' You may mail or deliver comments to Patricia W. DiMuzio, Director, Regulation and Policy Division, Office of Policy and Analysis, 1501 Farm Credit Drive, McLean, VA, 22102–5090 or send by facsimile transmission to (703) 734–5784. You may review copies of all comments we receive in the Office of Policy and Analysis, FCA.

FOR FURTHER INFORMATION CONTACT:

Alan Markowitz, Senior Policy Analyst, Office of Policy and Analysis, Farm Credit Administration, McLean, VA 22102–5090, (703) 883–4479; or

Rebecca S. Orlich, Senior Attorney, Office of General Counsel, Farm Credit Administration, McLean, VA 22102–5090, (703) 883–4020, TDD (703) 883–4444.

SUPPLEMENTARY INFORMATION: The objectives of our supplemental information are:

- To ensure that the readers of our proposed termination rule understand the exit fee calculation for an institution terminating its Farm Credit status; and
- To extend the comment period on the proposed termination rule.

1. Sample Exit Fee Calculation

Our proposed termination regulation was published on November 5, 1999 (64 FR 60370). Section 611.1255(a) of our proposal prescribes the calculation of a terminating association's exit fee, and § 611.1255(b) prescribes the calculation of a terminating bank's exit fee. This supplemental information contains hypothetical examples of an association terminating alone and of that same association terminating along with its affiliated bank to illustrate how to apply the procedures described in § 611.1255(a) and (b). (The exit fee calculation for an association is the same whether it terminates alone or with its affiliated bank.) The exit fee calculation worksheet will not be part of the final termination regulations.

Our examples contain selected balance sheet items for a Farm Credit Bank and a direct lending association. The first part of our examples includes the balance sheet assumptions for each institution. We provide the average daily balances (ADBs) for those items where the proposed rule requires such calculations. We have included only those balance sheet items that are necessary for calculating the exit fees for the bank and the association. For your convenience, notes follow the worksheet and explain which provision of the termination regulations each worksheet line implements.

2. Extension of Comment Period

In our proposed rule, we provided for a 90-day comment period ending on February 3, 2000. In order to give the public ample time to study the sample exit fee calculation before submitting comments, we are extending the comment period on the proposed rule.

BILLING CODE 6705–01–P

Final Exit Fee Worksheet

($ in thousands)

Assumptions

	Bank	Association
Average daily balance (ADB) of assets	$6,000,000	$1,200,000
ADB of liabilities	$5,000,000	$1,000,000
Capital:		
- ADB of purchased and allocated equities	$600,000	$100,000
- ADB of unallocated equities	$400,000	$100,000
ADB of purchased and allocated investment in terminating Bank:	$0	$150,000
ADB of direct loan volume	$4,000,000	$1,000,000
Termination-related expenses:		
- ADB of expenses recorded during previous 12 months	$150	$50
- Expenses recorded more than 12 months before calculation	$50	$50
Financial Assistance Corporation (FAC) obligation due to termination	$1,000	$1,000
Taxes due to termination	$0	$100[1]
ADB of term preferred stock (a liability under generally accepted accounting principles that qualifies as regulatory capital)	$1,000	$100
Percent of equity owned by dissenting stockholders	0%	10%
ADB of direct loans to affiliated associations that were paid off or transferred in the 12-month period before termination	$3,000,000	NA
ADB of equity investments held in terminating Bank by affiliated associations that it retired or transferred during the 12 months before termination	$750,000	NA

Final Exit Fee Calculation for Association

1	Enter the ADB of association assets			1	$ 1,200,000
2	Enter the ADB of expenses related to termination. Related expenses include, but are not limited to, legal services, accounting services, auditing, business planning, payments of severance and special retirements, and application fees for the termination and reorganization			2	$ 50
3	**Add** line 1 and line 2			3	$ 1,200,050
4	Enter the dollar amount of your termination payment (to your affiliated Bank) related to FAC obligations	4	$ 1,000		
5	Enter the dollar amount of taxes you will have to pay due to the termination	5	$ 100		
6	Enter ADB of purchased and allocated equities to be paid to dissenting stockholders and FCS institutions	6	$ 10,000		
7	Enter ADB of unallocated equities to be paid to dissenting stockholders and FCS institutions	7	$ 10,000		
8	**Add** lines 4 through 7			8	$ 21,100
9	**Subtract** line 8 from line 3.			9	$ 1,178,950
10	Enter the amount of any adjustments to assets the FCA requires			10	$ 50
11	Add or subtract line 10 from line 9, as applicable. This is the **Adjusted association assets**			11	$ 1,179,000
12	Enter the ADB of association liabilities			12	$ 1,000,000

[1] For this example, we are assuming that the taxes due from the association are the same whether it terminates alone or with its affiliated Bank.

13	Enter the ADB of liabilities treated as regulatory capital under the capital or collateral requirements	13	$ 100		
14	**Subtract** line 13 from line 12.			14	$ 999,900
15	Enter the amount of any adjustments to liabilities the FCA requires			15	$ 0
16	Add or subtract line 15 from line 14, as applicable. This is the **Adjusted association liabilities**			16	$ 999,900
17	**Subtract** line 16 from line 11. This is the **Total Capital** for the association for purposes of termination			17	$ 179,100
18	**Multiply** line 11 by 6% (.06)			18	$ 70,740
19	**Subtract** line 18 from line 17. This is the **Final Exit Fee of the association**			19	$ 108,360

Final Exit Fee Calculation for Bank

20	Enter ADB of Bank assets			20	$ 6,000,000
21	Enter the ADB of expenses related to termination. Related expenses include, but are not limited to, legal services, accounting services, auditing, business planning, payments of severance and special retirements, and application fees for the termination and reorganization	21	$ 150		
22	Enter the dollar amount of the termination payments to the Bank by the terminating associations related to FAC obligations	22	$ 1,000		
23	**Add** lines 21 and 22			23	$ 1,150
24	**Add** line 20 and line 23			24	$ 6,001,150
25	Enter ADB of direct loans to affiliated associations that were paid off or transferred in the 12-month period before termination	25	$ 3,000,000		
26	Enter ADB of equity investments held in the Bank by affiliated associations that it retired or transferred during the 12 months before termination. A non-terminating association's investment consists of purchased equities, allocated equities, and a pro rata share of the Bank's unallocated surplus	26	$ 750,000		
27	Enter the dollar amount of the Bank's termination payment to the FAC	27	$ 1,000		
28	Enter the dollar amount of taxes paid or accrued due to the termination	28	$ 0		
29	Enter ADB of purchased and allocated equities to be paid to dissenting stockholders and FCS institutions	29	$ 0		
30	Enter ADB of unallocated equities to be paid to dissenting stockholders and FCS institutions	30	$ 0		
31	**Add** lines 25 through 30			31	$ 3,751,000
32	**Subtract** line 31 from line 24.			32	$ 2,250,150
33	Enter the amount of any adjustments to assets the FCA requires			33	$ 50
34	Add or subtract line 33 from line 32, as applicable. This is the **Adjusted Bank assets**			34	$ 2,250,200
35	Enter the ADB of Bank liabilities			35	$ 5,000,000
36	Enter ADB of direct loans to affiliated associations that were paid off or transferred in the 12-month period before termination	36	$ 3,000,000		
37	Enter the ADB of liabilities treated as regulatory capital under the capital or collateral requirements	37	$ 1,000		
38	**Add** line 36 and line 37.			38	$ 3,001,000
39	**Subtract** line 38 from line 35.			39	$ 1,999,000
40	Enter the amount of any adjustments to liabilities the FCA requires			40	$ 0
41	Add or subtract line 15 from line 14, as applicable. This is the **Adjusted Bank liabilities**			41	$ 1,999,000
42	Enter Adjusted association assets amount from line 11	42	$ 1,179,000		
43	Enter Adjusted Bank assets from line 34	43	$ 2,250,200		
44	**Add** line 42 and line 43	44	$ 3,429,200		
45	Enter ADB of inter-company eliminations (e.g. direct note and Bank stock)	45	$ 1,150,000		

46	**Subtract** line 45 from line 44. This is the **combined assets** of the association and Bank			46	$ 2,279,200
47	Enter the Adjusted association liabilities from line 16	47	$ 999,900		
48	Enter the Adjusted Bank liabilities from line 41	48	$ 1,999,000		
49	**Add** line 47 and line 48	49	$ 2,998,900		
50	Enter ADB of inter-company eliminations (e.g. direct loan)	50	$ 1,000,000		
51	**Subtract** line 50 from line 49. This is the **combined liabilities** of the association and Bank			51	$ 1,998,900
52	**Subtract** line 51 from line 46. This is the **combined Total Capital** of the association and Bank			52	$ 280,300
53	**Multiply** the combined assets on line 46 by 6% (.06)			53	$ 136,752
54	**Subtract** line 53 from line 52. This is the **combined Final Exit Fee** for the association and Bank.			54	$ 143,548
55	Enter the Final Exit Fee of the association from line 19			55	$ 108,360
56	**Subtract** Line 55 from line 54. This is the **Final Exit Fee of the Bank**			56	$ 35,188

Notes to the Worksheet

All the references are to paragraphs of proposed § 611.1255.

Line 1. Paragraphs (a)(1), (a)(2), and (a)(3). Assume for this calculation that you have not paid or accrued the amounts described in lines 4–7.

Line 2. Paragraph (a)(4)(i). This item includes only the expenses incurred in the 12 months before termination.

Line 3. Paragraph (a)(4)(i).

Line 4. Paragraph (a)(4)(ii)(A).

Line 5. Paragraph (a)(4)(ii)(B).

Lines 6 and 7. Paragraph (a)(4)(ii)(C).

Lines 8 and 9. Paragraph (a)(4)(ii).

Lines 10 and 11. Paragraph (a)(4)(iv). This is an adjustment to assets we may require. In this example, we are requiring the terminating association to add back to its assets the termination expenses it paid or accrued more than 12 months before termination.

Line 12. Paragraphs (a)(1) and (a)(3). Assume for this calculation that you have not paid or accrued the amounts described in lines 4–7.

Lines 13 and 14. Paragraph (a)(4)(iii).

Lines 15 and 16. Paragraph (a)(4)(iv). This is an adjustment to liabilities we may require. In this example, we are not requiring the terminating association to make adjustments to its liabilities.

Line 17. Paragraph (a)(5).

Lines 18 and 19. Paragraph (a)(6)—association terminating alone, or (b)(1)—association terminating with its affiliated bank. The exit fee calculation ends here for an association terminating without its affiliated bank.

Line 20. Paragraphs (b)(2), (b)(3), and (b)(4). Assume for this calculation that you have not paid or accrued the amounts described in lines 27–30. We note that proposed paragraph (b)(4) incorrectly refers to ''assets and total capital.'' It should say ''assets and liabilities.''

Line 21. Paragraph (b)(5)(i)(A).

Line 22. paragraph (b)(5)(i)(B).

Lines 23 and 24. Paragraph (b)(5)(i).

Line 25. Paragraph (b)(5)(ii).

Line 26. Paragraph (b)(5)(iii)(A).

Line 27. Paragraph (b)(5)(iii)(B).

Line 28. Paragraph (b)(5)(iii)(C).

Lines 29 and 30. Paragraph (b)(5)(iii)(D). In this example, we assume there are no dissenting stockholders.

Lines 31 and 32. Paragraph (b)(5)(iii).

Lines 33 and 34. Paragraph (b)(5)(v). This is an adjustment to assets we may require. In this example, we are requiring the terminating bank to add back to its assets the termination expenses it paid or accrued more than 12 months before termination.

Line 35. Paragraphs (b)(2), (b)(3), and (b)(4). We note that proposed paragraph (b)(4) incorrectly refers to ''assets and total capital.'' It should say ''assets and liabilities.''

Line 36. Paragraph (b)(5)(ii).

Line 37. Paragraph (b)(5)(iv).

Lines 38 and 39. Paragraphs (b)(5)(ii) and (b)(5)(iv).

Lines 40 and 41. Paragraph (b)(5)(v). This is an adjustment to liabilities we may require. In this example, we are not requiring the terminating bank to make adjustments to its liabilities.

Lines 42–51. Paragraph (b)(6). These lines show how to combine the balance sheets of the terminating bank and terminating association.

Line 52. Paragraph (b)(7).

Lines 53–55. Paragraph (b)(8).

Line 56. Paragraph (b)(9).

Dated: January 27, 2000.

Vivian L. Portis,

Secretary, Farm Credit Administration Board.

[FR Doc. 00–2333 Filed 2–2–00; 8:45 am]

BILLING CODE 6705–01–P

DEPARTMENT OF ENERGY

Federal Energy Regulatory Commission

18 CFR Part 382

[Docket No. RM00–7–000]

Revision of Annual Charges Assessed to Public Utilities

January 28, 2000.

AGENCY: Federal Energy Regulatory Commission, DOE.

ACTION: Notice of proposed rulemaking.

SUMMARY: The Federal Energy Regulatory Commission (Commission) proposes to amend its regulations to establish a new methodology for the assessment of annual charges to public utilities. The Commission proposes that annual charges would be assessed to public utilities based on the volume of electricity transmitted by the public utilities.

DATES: Comments on the proposed rulemaking are due on or before April 3, 2000..

ADDRESSES: File comments on the notice of proposed rulemaking with the Office of the Secretary, Federal Energy Regulatory Commission, 888 First Street, N.E., Washington, D.C. 20426. Comments should reference Docket No. RM00–7–000

FOR FURTHER INFORMATION CONTACT:

Herman Dalgetty (Technical Information), Chief, Accounts Receivable and Assessment Branch, Office of Finance, Accounting and Operations, 888 First Street, N.E., Washington, D.C. 20426, (202) 219–2918

Jennifer Lokenvitz Schwitzer (Legal Information), Office of the General Counsel, 888 First Street, N.E.,

Washington, D.C. 20426, (202) 219–4471

SUPPLEMENTARY INFORMATION: In addition to publishing the full text of this document in the **Federal Register**, the Commission also provides all interested persons an opportunity to view and/or print the contents of this document via the Internet through FERC's Home Page *(http://ferc.fed.us)* and in FERC's Public Reference Room during normal business hours (8:30 a.m. to 5:00 p.m. Eastern time) at 888 First Street, N.E., Room 2A, Washington, DC 20426.

From FERC's Home Page on the Internet, this information is available in both the Commission Issuance Posting System (CIPS) and the Records and Information Management System (RIMS).

—CIPS provides access to the texts of formal documents issued by the Commission since November 14, 1994.

—CIPS can be accessed using the CIPS link or the Energy Information Online icon. The full text of this document will be available on IPS in ASCII and WordPerfect 8.0 format for viewing, printing and/or downloading.

—RIMS contains images of documents submitted to and issued by the Commission after November 16, 1981. Documents from November 1995 to the present can be viewed and printed from FERC's Home Page using the RIMS link or the Energy Information Online icon. Descriptions of documents back to November 16, 1981, are also available from RIMS-on-the-Web; requests for copies of these and other older documents should be submitted to the Public Reference Room.

User assistance is available for RIMS, CIPS and the Website during normal business hours from our Help Line at (202) 208–2222 (E-mail to *WebMaster@ferc.fed.us*) or the Public Reference Room at (202) 208–1371 (E-mail to *public.referenceroom@ferc.fed.us*).

During normal business hours, documents can also be viewed and/or printed in FERC's Public Reference Room, where RIMS, CIPS and the FERC Website are available. User assistance is also available.

I. Introduction

The Federal Energy Regulatory Commission (Commission) proposes to amend its regulations to establish a new methodology for the assessment of annual charges to public utilities. The Commission proposes that annual charges would be assessed to public utilities based on the volume of electricity transmitted by the public utilities. [1]

II. Background

A. Commission Authority

The Commission is required by section 3401 of the Omnibus Budget Reconciliation Act of 1986 (Budget Act) [2] to ''assess and collect fees and annual charges in any fiscal year in amounts equal to all of the costs incurred * * * in that fiscal year.'' [3] The annual charges must be computed based on methods which the Commission determines to be ''fair and equitable.'' [4] The Conference Report accompanying the Budget Act provides the Commission with the following guidance as to this phrase's meaning:

> [A]nnual charges assessed during a fiscal year on any person may be reasonably based on the following factors: (1) The type of Commission regulation which applies to such person such as a gas pipeline or electric utility regulation; (2) the total direct and indirect costs of that type of Commission regulation incurred during such year; [5] (3) the amount of energy—electricity, natural gas, or oil—transported or sold subject to Commission regulation by such person during such year; and (4) the total volume of all energy transported or sold subject to Commission regulation by all similarly situated persons during such year.[6]

The Commission may assess these charges by making estimates based upon data available to it at the time of the assessment. [7]

The annual charges do not enable the Commission to collect amounts in excess of its expenses, but merely serve as a vehicle to reimburse the United States Treasury for the Commission's expenses.[8]

B. Current Annual Charge Billing Procedure

As required by the Budget Act, the Commission's regulations provide for the payment of annual charges by public utilities. [9] The Commission intends that these electric annual charges in any fiscal year will recover the Commission's estimated electric regulatory program costs (other than the costs of regulating Federal Power Marketing Agencies and electric regulatory program costs recovered through electric filing fees) for that fiscal year. In the next fiscal year, the Commission adjusts its annual charges up or down, as appropriate, both to eliminate any over-or under-recovery of the Commission's actual costs and to eliminate any over-or under-charging of any particular person.[10]

In calculating annual charges, the Commission first determines the total costs of its electric regulatory program and subtracts all Federal Power Marketing Agency-related and electric filing fee collections to determine total collectible electric regulatory program costs. It then uses the data submitted under FERC Reporting Requirement No. 582 (FERC–582) to determine the total volumes of long-term firm sales and transmission, and short-term sales and transmission and exchanges for all assessable public utilities. The Commission divides those transaction volumes into its collectible electric regulatory program costs to determine the unit charge per megawatt-hour for each category of long-term and short-term transactions. Finally, the

---

[1] On August 12, 1998, the Commission received a petition for rulemaking from Automated Power Exchange, Citizens Power, Coral Power, L.L.C., Electric Clearinghouse, Inc., Enron Power Marketing, Inc., Koch Energy Trading, Inc., NP Energy Inc., Sonat Power Marketing, L.P., and Williams Energy Services in Docket No. RM98–14–000. The parties petitioned the Commission to initiate a rulemaking to modify its methodology for assessing annual charges. The Commission notes that the instant rulemaking on annual charges moots the petition. Therefore, the Commission plans to terminate Docket No. RM98–14–000 in the final rule. Petitioners are free to file timely comments in response to the instant rulemaking and we will address them in the final rule.

[2] 42 U.S.C. 7178.

[3] This authority is in addition to that granted to the Commission in sections 10(e) and 30(e) of the Federal Power Act (FPA). 16 U.S.C. 803(e), 823a(e).

[4] 42 U.S.C. 7178(b).

[5] The Commission is required to collect not only all its direct costs but also all its indirect expenses such as hearing costs and indirect personnel costs. *See* H.R. Conf. Rep. No. 99–1012 at 238 (1986), *reprinted in* 1986 U.S.C.C.A.N. 3868, 3883 (Conference Report); *see also,* S. Rep. No. 99–348 at 56, 66 and 68 (1986).

[6] *See* Conference Report at 238.

[7] 42 U.S.C. 7178(c).

[8] *Id.* at 7178(f). Congress approves the Commission's budget through annual and supplemental appropriations.

[9] 18 CFR Part 382; *see* Annual Charges Under the Omnibus Budget Reconciliation Act of 1986, Order No. 472, 52 FR 21263 and 24153 (June 5 and 29, 1987), FERC Stats. & Regs., Regulations Preambles 1986–1990 ¶ 30,746 (1987), *clarified,* Order No. 472–A, 52 FR 23650 (June 24, 1987), FERC Stats. & Regs., Regulations Preambles 1986–1990 ¶ 30,750, *order on reh'g,* Order No. 472–B, 52 FR 36013 (Sept. 25, 1987), FERC Stats. & Regs., Regulations Preambles 1986–1990 ¶ 30,767 (1987), *order on reh'g,* Order No. 472–C, 53 FR 1728 (Jan. 22, 1988), 42 FERC ¶ 61,013 (1988).

[10] 18 CFR 382.201; *see* Order No. 472, 52 FR 21263 and 24153, FERC Stats. & Regs., Regulations Preambles 1986–1990 at 30,612–18; *accord* Annual Charges Under the Omnibus Budget Reconciliation Act of 1986, Order No. 507, 53 FR 46445 (Nov. 17, 1985), FERC Stats. & Regs., Regulations Preambles 1986–1990 ¶ 30,839 at 31,263–64 (1988); Texas Utilities Electric Company, 45 FERC ¶ 61,007 at 61,027 (1988) (*Texas Utilities*).

Commission multiplies the transaction volume in each category for each public utility by the relevant unit charge per megawatt-hour to determine the annual charges for all assessable public utilities.[11]

Public utilities subject to these annual charges must submit FERC–582 to the Office of the Secretary by April 30 of each year.[12] The Commission issues bills for annual charges, and public utilities then must pay the charges within 45 days of the date on which the Commission issues the bills.[13]

C. Reasons for This Rule

Since the issuance of Order No. 472, the industry has undergone sweeping changes, including: The Commission's establishment of open access transmission as a foundation for competitive wholesale power markets;[14] a movement by many states to develop retail competition; the growing divestiture of generation assets by traditional public utilities; the entry of new market participants in the industry in the form of independent and affiliated power marketers and stand-alone merchant plant generators; and the establishment of Independent System Operators (ISOs), the expected establishment of transmission companies (transcos), and the establishment of power exchanges as managers of transmission systems and power markets, respectively.

As the landscape of the industry has changed and continues to change, the nature of the work of the Commission likewise has changed. The purpose of this rule is to change the way in which the Commission assesses annual charges to recover its electric regulatory program costs to reflect these changes, by assessing annual charges to public utilities based on the volumes of electric energy transmitted.

III. Discussion

In Order No. 472, to implement the Budget Act, the Commission formulated an annual charge billing procedure. To do this, the Commission had to determine: (1) The types of companies which the Commission should bill; (2) how to estimate and then allocate the Commission's costs among its different regulatory programs; and (3) how to allocate each program's costs among the companies under each program. After the annual charge billing procedure was formulated, the Commission then had to determine (1) how to adjust the annual charges at the end of a fiscal year ''to eliminate any over-recovery or under-recovery of [the Commission's] total costs, and any overcharging or undercharging of any person'' pursuant to section 3401(e) of the Budget Act; and (2) the standards for waiving all or part of an annual charge pursuant to section 3401(g) of the Budget Act.

We note at the outset that this proposed rule is only for the determination of annual charges to recover the costs of the Commission's electric regulatory program.

Therefore, how to apportion the costs among the Commission's different regulatory programs is not before the Commission.

Below, we will discuss the types of companies to be billed, the proposed apportionment of our electric regulatory program costs among such companies, and other matters related to the proposed changes to the Commission's regulation on annual charges.

A. The Types of Companies To Be Billed

The Commission's electric regulatory program includes administering the provisions of Parts II and III of the Federal Power Act (FPA)[15] as they apply to the activities of public utilities (traditionally, principally investor-owned utilities);[16] discharging its responsibilities under various statues involving the Federal Power Marketing Agencies (PMAs); and implementing various provisions of the Public Utility Regulatory Policies Act of 1987 (PURPA)[17] involving qualifying cogenerators and small power producers (QFs).

1. Public Utilities

Pursuant to section 205 of the FPA,[18] the Commission regulates the rates, terms and conditions of service of public utilities making sales for resale or transmitting electric energy in interstate commerce. All jurisdictional rates, terms and conditions must be on file with the Commission, and may be approved by the Commission only if they are just and reasonable and not unduly discriminatory or preferential. Under section 206 of the FPA,[19] the Commission may change any rates, terms or conditions that it finds to be unjust, unreasonable, or unduly discriminatory or preferential.

The Commission also regulates certain accounting and corporate activities of public utilities pursuant to the FPA. Examples include the following: Under section 203,[20] the Commission reviews applications filed by public utilities seeking to merge or to dispose of jurisdictional facilities. Pursuant to section 204,[21] the Commission reviews the proposed securities issuances of public utilities whose securities issuances are not regulated by a state commission within the meaning of section 204(f). Under sections 301 and 302,[22] the Commission has authority over a public utility's accounting and its depreciation.

2. PMA's

The Commission reviews the rates established by the Department of Energy for the federally-owned PMAs (Bonneville Power Administration (BPA), Alaska Power Administration, Southeastern Power Administration, Southwestern Power Administration, and Western Power Administration). While regulation of public utility rates is guided by the FPA, regulation of the PMAs' rates is subject to the standards enumerated in a number of other statutes.[23] Essentially, the statutes require that the rates established by the PMAs must be devised with regard for the recovery of the cost of generation and transmission of electric energy, the encouragement of the most widespread use of the power, the provision of the lowest possible rates to customers consistent with sound business principles, and the protection of the interests of the United States in amortizing its investment in the projects within a reasonable period of time. The Commission is also authorized,

[11] 18 CFR 382.201; *see* Annual Charges Under the Omnibus Budget Reconciliation Act of 1986 (Phibro Inc.), 81 FERC ¶ 61,308 at 62,424–25 (1997).

[12] 18 CFR 382.201(b)(4).

[13] *See Texas Utilities,* 45 FERC at 61,026.

[14] *See* Promoting Wholesale Competition Through Open Access Non-discriminatory Transmission Services by Public Utilities and Recovery of Stranded Costs by Public Utilities and Transmitting Utilities, 61 FR 21540 (May 10, 1996), FERC Stats. & Regs. § 31,036 (1996) (Order No. 888), *order on reh'g*, Order No. 888–A, 62 FR 12274 (March 14, 1997), FERC Stats. & Regs. § 31,048 (1997), *order on reh'g*, Order No. 888–B, 62 FR 64688 (March 14, 1997), 81 FERC § 61,248 (1997), *order on reh'g*, Order No. 888–C, 82 FERC § 61,046 (1998), *appeal docketed*, Transmission Access Policy Study Group, *et al.* v. FERC, No. 97–1715 *et al.* (D.C. Cir.).

[15] 16 U.S.C. 824–825r.

[16] Under sections 211, 212 and 213 of the FPA, 16 U.S.C. 824j–l, the Commission also has authority over transmitting utilities that are not public utilities. *Compare* 16 U.S.C. 796(23) *with* 16 U.S.C. 824(b), (e).

[17] 16 U.S.C. 2601–2645.

[18] 16 U.S.C. 824d(a).

[19] 16 U.S.C. 824e.

[20] 16 U.S.C. 824b.

[21] 16 U.S.C. 824c.

[22] 16 U.S.C. 825, 825a.

[23] Flood Control Act of 1944, 16 U.S.C. 825s; Federal Columbia River Transmission System Act, 16 U.S.C. 838g; Pacific Northwest Power Preference Act, 16 U.S.C. 837; Pacific Northwest Electric Power Planning and Conservation Act of 1980, 16 U.S.C. 839; the Bonneville Project Act, 16 U.S.C. 832f (Northwest Power Act); and the Reclamation Act of 1939, 43 U.S.C. 485h; the Department of Energy Organization Act, 42 U.S.C. 7101; see also DOE Delegation Order No. 0204–108, 48 FR 55664 (Dec. 14, 1983); 18 CFR Parts 300 and 301.

pursuant to the Northwest Power Act, to review the Average System Cost methodology used to determine rates for exchange sales by utilities to BPA.

3. QF's

Section 210 of PURPA [24] requires the Commission to prescribe rules to encourage cogeneration and small power production of electricity. In particular, the section directs the Commission to adopt rules requiring utilities to purchase power from and sell power to qualifying cogeneration and small power production facilities. The Commission reviews applications filed by cogenerators and small power producers requesting QF certification, and either grants or rejects such applications based on criteria set forth in the Commission's regulations.[25]

4. Discussion

The Commission proposes to assess annual charges to public utilities involved in the transmission of electric energy in interstate commerce. The Commission will continue unchanged its existing policy with regard to its assessment of annual charges to PMAs. [26]

The Commission also will continue to excuse qualifying cogenerators and small power producers from annual charges. For the most part, these entities do not provide interstate transmission of electric energy. The Commission believes that any amounts which might be assessed as annual charges to the few entities that may provide such transmission do not justify the risk of discouraging the fullest development of cogeneration and small power production by such entities. Therefore, the Commission will continue to not assess annual charges to these entities.[27]

The Commission proposes to continue its existing policy that municipals and rural electric cooperative utility systems that are financed by the Rural Utilities Service will not be required to pay annual charges. While these entities may be transmitting utilities subject to our authority under sections 211, 212 and 213 of the FPA, they are not public utilities under the FPA.[28]

The Commission proposes to continue its practice of not assessing annual charges to utilities operating in Alaska or Hawaii because they are not public utilities under the FPA, because they do not make wholesale sales or transmit electric energy in interstate commerce.

Lastly, the Commission proposes to not assess annual charges to foreign electric utilities to the extent that their transactions are in foreign commerce or wholly within another country.[29]

B. Proposed Apportionment

The Commission is proposing to change the way in which it apportions annual charges among the entities it regulates. As previously stated, the Commission first determines the total costs of its electric regulatory program and subtracts all Federal Power Marketing Agency-related costs and electric filing fee collections to determine the total collectible electric regulatory program costs. It then uses the data submitted under FERC–582 to determine the total volumes of long-term firm sales and transmission, and short-term sales and transmission [30] and exchanges for all assessable public utilities. The Commission divides those transaction volumes into its collectible electric regulatory program costs to determine the unit charge per megawatt-hour for each category of transactions. Finally, the Commission multiplies the transaction volume in each category for each public utility by the relevant unit charge per megawatt-hour to determine the annual charges for each assessable public utility.[31]

The Commission established two separate categories because:

Rates for long-term coordination and transmission sales usually require greater use of Commission resources than those for sales which have a duration of less than five years. Long-term sales contracts tend to be based upon fully distributed costs and require cost projections (test year data) which must be reasonable. Rates for short-term coordination or transmission sales, on the other hand, are not necessarily exclusively cost-based, but may be made for many non-cost reasons as well. [32]

This methodology for assessing annual charges worked well for the industry structure that existed at the time the rule was issued. However, because there has been such dramatic changes in the industry, this classification no longer serves its purpose.

With open-access transmission, functional unbundling and the rapid movement to market-based power sales rates brought about by, inter alia, Commission Order No. 888,[33] state retail unbundling efforts, and the recently issued Order No. 2000,[34] the time and effort of our electric regulatory program is now increasingly devoted to assuring open and equal access to public utilities' transmission systems. In contrast, the time and effort of our electric regulatory program that had been devoted to reviewing cost-based power sales rates has been decreasing, and with open access transmission, power sales rates are now increasingly being disciplined by competitive market forces and less by the Commission directly. As a consequence, we believe it appropriate to assess our electric regulatory program costs solely on the MWh of electric energy transmitted in interstate commerce by public utilities,[35] rather than, as in the past, on both jurisdictional power sales and transmission volumes. We further note that, as described below, sellers of electric energy typically must use public utility transmission systems to transmit their electric energy and therefore will, in fact, pay annual charges, albeit indirectly.

The Commission believes that this approach of directly charging only those public utilities that provide interstate transmission service is both fair and equitable because, in turn, all parties involved in the generation and sale of electric energy rely on the transmission system to move their product. Thus, the Commission believes that power sellers will, in fact, be contributing to the Commission's recovery of its electric regulatory program costs in that they will be using the transmission system and, in the cost-based rates that they will pay for transmission service, will pay, albeit indirectly, a fair and equitable share of the Commission's costs.

C. Conclusion

Specifically, therefore, the Commission is proposing to assess annual charges to public utilities based on their transmission of electric energy

[24] 16 U.S.C. 824a–3(a).

[25] 18 CFR Part 292.

[26] *See* 18 CFR 382.201(c).

[27] 18 CFR 382.102(b); *see* Order No. 472, FERC Stats. & Regs., Regulations Preambles 1986–1990 at 30,637.

[28] 18 CFR 382.102(b); *see* 16 U.S.C. 284; South Carolina Public Service Authority, 75 FERC 61,209 at 61,696 (1996); Dairyland Power Corporation, 37 FPC 12, 15 (1967); *accord*, Salt River Project Agricultural Improvement and Power District v. FPC, 391 F.2d 470, 474 (D.C. Cir.), *cert.* denied, 393 U.S. 857 (1968).

[29] *E.g.*, British Columbia Power Exchange Corporation, 80 FERC 61,343 at 62,137, 62,141 (1997) (sales in foreign commerce or within another country are excluded from annual charges calculations).

[30] Long-term firm sales and transmission activities and short-term sales and transmission activities are defined in 18 CFR 382.102.

[31] The Commission also carries over any over-or under-charge from the prior year as a credit or debit on the current year's annual charge bill.

[32] Order 472–B at 30,830.

[33] *See* supra note 14.

[34] Regional Transmission Organizations, Order No. 2000, 65 FR 810 (Jan. 6, 2000), FERC Stats. & Regs. ¶ 31,089 (1999).

[35] This approach is essentially the same as how annual charges are assessed against gas pipelines.

in interstate commerce, as measured by: (1) unbundled wholesale transmission, (2) unbundled retail transmission,[36] and (3) bundled wholesale power sales which, by definition, include a transmission component, where the transmission component is not separately reported as unbundled transmission.[37]

As to ISOs, and potential Regional Transmission Organizations (RTOs), that have members that retain ownership of transmission facilities, the Commission is concerned that the assessment of annual charges to them could result in a ''double counting'' of transactions '' by counting a single transaction both to the transmission-owning public utility and to the ISO or RTO public utility. We believe that there are at least two ways to address this issue, and are inviting comments on these and any other solutions to this problem. One way would be not to charge the ISO or RTO itself, but instead charge each transmission-owning public utility based on the MWh of transmission service provided on their lines. The transmission-owning public utility would include the annual charges, as a cost element, in its revenue requirement, which, in turn, is recovered by the ISO or RTO through the ISO's or RTO's open access transmission tariff rates. Another way would be to allow the ISO or RTO to act as an agent for all of the individual transmission owners and have the ISO or RTO pay the annual charges rather than the individual transmission owners. Either of these approaches may be acceptable. The Commission is soliciting comments on these approaches, as well as any other approach that will allow the Commission to collect annual charges on these MWh of transmission service, in the most administratively efficient manner.

[36] The Commission is proposing that annual charges will be assessed based on all interstate transmission by public utilities, with no distinction made between so-called unbundled retail and unbundled wholesale transmission. This transmission would include MWh received in wheeling transactions and the MWh delivered in exchange transactions.

[37] If the bundled wholesale power sale involves only the use of non-affiliated, third-party transmission systems, the transmission component would be picked up through the non-affiliated, third-party transmission providers' reporting of the MWhs of transmission service they provided. Similarly, if the bundled wholesale power sale involves the use of the power seller's or its affiliate's transmission system, the transmission component may be separately reported as unbundled transmission. If, however, neither of these were the case, the MWhs would need to be reported as a bundled wholesale power sale.

D. Other Matters

1. Reporting Requirements

The Commission is proposing a change in its reporting requirements for annual charges. Currently, a public utility has to submit the total long-term firm sales for resale and transmission megawatt-hours and the total short-term sales, transmission, and exchange megawatt-hours. With the elimination of the distinction between long-term and short-term transactions, such distinctions in the reporting requirement are likewise no longer needed. The Commission proposes, therefore, that public utilities will report only total volumes of electric energy transmitted in interstate commerce (as defined above to include all unbundled transmission and all bundled wholesale power sales), in MWh, by April 30th of each year.

Finally, we note that any corrections to FERC–582 will need to be made by the end of the calendar year in which the FERC–582 was filed.

2. Standards for Waiving All or Part of an Annual Charge

The Commission is not proposing to change the standards applicable for waiving all or part of an annual charge. Thus, the Commission is proposing to continue to apply to annual charges the stringent standards for waiver currently applicable to filing fees, with a filing period for waiver petitions of 15 days after the issuance of the annual charges bill.

3. Effective Date

We anticipate that we will begin assessing annual charges under this new methodology starting with bills to be paid in calendar year 2002, based on data reported on FERC–582 in calendar year 2002 (for transactions that occurred in calendar year 2001, the first full year after adoption of changes in the regulation).[38]

Likewise we anticipate that we will make the change discussed above with respect to corrections to FERC–582 effective beginning with the data reported in FERC–582 in calendar year 2002 (for transactions that occurred in calendar year 2001); thus such corrections will need to be submitted on or before December 31, 2002.

IV. Environmental Statement

The Commission excludes certain actions not having a significant effect on the human environment from the requirement to prepare an environmental assessment or an environmental impact statement.[39] The promulgation of a rule that is procedural or that does not substantially change the effect of legislation or regulations amended raises no environmental considerations.[40] This proposed rule amends Part 382 of the Commission's regulations to establish a new methodology for the assessment of annual charges to public utilities and does not substantially change the effect of the underlying legislation or the regulations being revised. Accordingly, no environmental consideration is necessary.

[38] Our existing regulations will remain effective until these changes become effective.

V. Regulatory Flexibility Act

The Regulatory Flexibility Act (RFA), 5 U.S.C. 601–612, requires rulemakings to contain either a description and analysis of the effect that the proposed rule will have on small entities or a certification that the rule will not have a significant economic impact on a substantial number of small entities.

In *Mid-Tex Elec. Coop.* v. *FERC,* 773 F.2d 327 (D.C. Cir. 1985), the court found that Congress, in passing the RFA, intended agencies to limit their consideration ''to small entities that would be directly regulated'' by proposed rules. *Id.* at 342. The court further concluded that ''the relevant 'economic impact' was the impact of compliance with the proposed rule on regulated small entities.'' *Id.* at 342.

Overall, the Commission does not believe that this rule will have a significant direct impact on small entities. Specifically, most, if not all, public utilities that would be assessed annual charges under this rule do not fall within the RFA's definition of a small entity because most public utilities subject to this rule are too large to be considered ''small entities.''[41] Therefore, the Commission certifies that this rule will not have a ''significant economic impact on a substantial number of small entities.''

VI. Public Reporting Burden and Information Collection Statement

The collection of information contained in this proposed rule is being submitted to the Office of Management and Budget (OMB) for review under Section 3507(d) of the Paperwork Reduction Act of 1995. FERC identifies the information provided under Part 382 as FERC–582.

Comments are solicited on the Commission's need for this information, whether the information will have

[39] 18 CFR 380.4.

[40] 18 CFR 380.4(a)(2)(ii).

[41] 5 U.S.C. 601(6).

practical utility, the accuracy of the provided burden estimates, ways to enhance the quality, utility, and clarity of the information to be collected, and any suggested methods for minimizing respondents' burden, including the use of automated information techniques.

The burden estimate for complying with this proposed rule is as follows:

Public Reporting Burden: Estimated Annual Burden:

Data collection	Number of respondents	Number of responses	Hours per response	Total annual hours
FER–582	242	1	4	968

Total Annual Hours for Collection (reporting + recordkeeping, (if appropriate)) = 968.

Information Collection Costs: The Commission seeks comments on the costs to comply with these requirements. It has projected the average annualized cost for all respondents to be: Annualized Capital/Startup Costs − Annualized Costs (Operations & Maintenance) − $51,911 (968 hours ÷ 2080 hours per year × $111,545 = $51,911). The cost per respondent is equal to $215.

The OMB regulations require OMB to approve certain information collection requirements imposed by agency rule.[42] Accordingly, pursuant to OMB regulations, the Commission is providing notice of its proposed information collections to OMB.

Title: FERC–582, Electric Fees and Annual Charges.

Action: Proposed Data Collection.

OMB Control No.: 1902–0132.

The applicant shall not be penalized for failure to respond to this collection of information unless the collection of information displays a valid OMB control number.

Respondents: Business or other for profit, including small businesses.

Frequency of Responses: On occasion.

Necessity of Information: The proposed rule revises the requirements contained in 18 CFR Part 382 to revise the method for determining the assessment of annual charges.

The Commission is seeking to make its assessments for annual charges compatible with the current regulatory environment and the creation of competitive wholesale markets. The Commission has the authority under the Omnibus Budget Reconciliation of 1986 (42 U.S.C. 7178) to ''assess and collect fees and annual charges in any fiscal year in amounts equal to all of the costs incurred * * * in that fiscal year.'' The Act gives the Commission the flexibility to arrive at a reasonable approximation of its program costs. The costs are determined by a summation of all electric regulatory program costs and then subtracting all electric regulatory program filing fee collections in order to determine the total collectible costs for the electric regulatory program. Information submitted under FERC–582 is the basis for the calculation of annual charges, and presently includes total volumes of long-term firm sales and transmission and short-term sales and transmission plus exchanges for all public utilities, including power marketers. The proposed rule changes the basis for the calculation of annual charges to the total volumes of electricity transmitted by public utilities.

Internal Review: The Commission has assured itself, by means of internal review, that there is specific, objective support for the burden estimates associated with the information requirements. The Commission's Office of Finance, Accounting and Operations will use the data submitted under FERC–582 in order to serve as a billing determinant to recover costs for administering its electric regulatory program, including administering the provisions of Parts II and III of the Federal Power Act and the provisions of the Public Utility Regulatory Policies Act of 1987.

Interested persons may obtain information on the reporting requirements by contacting the following: Federal Energy Regulatory Commission, 888 First Street, N.E., Washington, D.C. 20426 [Attention: Michael Miller, Capital Planning and Policy Group, Phone: (202) 208–1415, Fax: (202) 208–2425, E-Mail: mike.miller@ferc.fed.us].

For submitting comments concerning the collection of information(s) and associated burden estimate(s), please send your comments to the contact listed above and to the Office of Management and Budget, Office of Information and Regulatory Affairs, Washington, D.C. 20503 [Attention: Desk Officer for the Federal Energy Regulatory Commission, Phone: (202) 395–3087, Fax: (202) 395–7285].

VII. Public Comment Procedures

Prior to taking final action on this proposed rulemaking, we are inviting interested persons to submit written comments on the changes to the regulations proposed in this notice to be adopted. All comments in response to this notice should be submitted to the Office of the Secretary, Federal Energy Regulatory Commission, 888 First Street, N.E., Washington, D.C. 20426, and should refer to Docket No. RM00–7–000. An original and fourteen (14) copies of such comments should be filed with the Commission on or before April 3, 2000.

In addition to filing paper copies, the Commission encourages the filing of comments either on computer diskette or via Internet E-Mail. Comments maybe filed in the following formats: WordPerfect 8.0 or lower version, MS Word Office 97 or lower version, or ASCII format.

For diskette filing, include the following information on the diskette label: Docket No. RM00–7–000; the name of the filing entity; the software and version used to create the file; and the name and telephone number of a contact person.

For Internet E-Mail submittal, comments should be submitted to ''comment.rm@ferc.fed.us'' in the following format. On the subject line, specify Docket No. RM00–7–000. In the body of the E-Mail message, include the name of the filing entity; the software and version used to create the file, and the name and telephone number of the contact person. Attach the comments to the E-Mail in one of the formats specified above. The Commission will send an automatic acknowledgment to the sender's E-Mail address upon receipt. Questions on electronic filing should be directed to Brooks Carter at: 202–501–8145, E-Mail address: brooks.carter@ferc.fed.us.

Commenters should take notice that, until the Commission amends its rules and regulations, the paper copy of the filing remains the official copy of the document submitted. Therefore, any discrepancies between the paper filing and the electronic filing or the diskette will be resolved by reference to the paper filing.

All written comments will be placed in the Commission's public files and will be available for inspection in the Commission's Public Reference room at 888 First Street, N.E., Washington, D.C. 20426, during regular business hours.

[42] 5 CFR 1320.11.

Additionally, comments may be viewed, printed or downloaded remotely via the Internet through FERC's Homepage, using the RIMS or CIPS link. RIMS contains all comments but only those comments submitted in electronic format are available on CIPS. User assistance is available at 202–208–2222, or by E-Mail to rimsmaster@ferc.fed.us.

List of Subjects in 18 CFR Part 382

Annual charges.

By direction of the Commission. Commissioner Bailey did not participate in this decision.

David P. Boergers,

Secretary.

In consideration of the foregoing, the Commission proposes to amend Part 382, Chapter I, Title 18 of the *Code of Federal Regulations*, as set forth below.

PART 382—ANNUAL CHARGES

1. The authority citation for Part 382 continues to read as follows:

Authority: 5 U.S.C. 551–557; 15 U.S.C. 717–717w, 3301–3432; 16 U.S.C. 791a–825r, 2601–2645; 42 U.S.C. 7101–7352; 49 U.S.C. 60502; 49 App. U.S.C. 1–85.

§ 382.102 [Amended]

2. In section 382.102 paragraphs (h), (i), (j) and (k) are removed and paragraphs (l), (m), (n), (o) and (p) are redesignated as (h), (i), (j), (k) and (l), respectively.

3. Section 382.201 is revised to read as follows:

§ 382.201 Annual charges under Parts II and III of the Federal Power Act and related statutes.

(a) *Determination of costs to be assessed to public utilities.* The adjusted costs of administration of the electric regulatory program, excluding the costs of regulating the Power Marketing Agencies, will be assessed to public utilities.

(b) *Determination of annual charges to be assessed to public utilities.* The costs determined under paragraph (a) of this section will be assessed as annual charges to each public utility based on the proportion of the megawatt-hours of transmission of electric energy in interstate commerce of each public utility in the immediately preceding reporting year (either a calendar year or fiscal year, depending on which accounting convention is used by the public utility to be charged) to the sum of the megawatt-hours of transmission of electric energy in interstate commerce in the immediately preceding reporting year of all public utilities being assessed annual charges.

(c) *Reporting requirement.* (1) For purposes of computing annual charges, as of January 1, 2002, a public utility, as defined in § 382.102(b), must submit under oath to the Office of the Secretary by April 30 of each year an original and conformed copies of the following information (designated as FERC Reporting Requirement No. 582 (FERC–582)): the total megawatt-hours of transmission of electric energy in interstate commerce, which for purposes of computing the annual charges and for purposes of this reporting requirement, will be measured by the sum of the megawatt-hours of all unbundled transmission (including MWh received in wheeling transactions and MWh delivered in exchange transactions) and the megawatt-hours of all bundled wholesale power sales (to the extent the megawatt-hours were not separately reported as unbundled transmission). This information should be reported to 3 decimal places; *e.g.*, 3,105 KWh will be reported as 3.105 MWh.

(2) Corrections to the information reported on FERC–582, as of January 1, 2002, must be submitted under oath to the Office of the Secretary on or before the end of each calendar year in which the information was originally reported (*i.e.*, on or before the last day of the year that the Commission is open to accept such filings, *e.g.*, on or before December 31, 2002, etc.)

(d) *Determination of annual charges to be assessed to power marketing agencies.* The adjusted costs of administration of the electric regulatory program as it applies to Power Marketing Agencies will be assessed against each power marketing agency based on the proportion of the megawatt-hours of sales of each power marketing agency in the immediately preceding reporting year (either a calendar year or fiscal year, depending on which accounting convention is used by the power marketing agency to be charged) to the sum of the megawatt-hours of sales in the immediately preceding reporting year of all power marketing agencies being assessed annual charges.

[FR Doc. 00–2366 Filed 2–2–00; 8:45 am]

BILLING CODE 6717–01–P

NATIONAL ARCHIVES AND RECORDS ADMINISTRATION

36 CFR Part 1234

RIN 3095–AA94

Elimination of Requirement to Rewind Computer Tapes

AGENCY: National Archives and Records Administration (NARA).

ACTION: Proposed rule.

SUMMARY: NARA proposes to revise its regulations to eliminate the requirement that Federal agencies rewind under controlled tension all computer tapes containing unscheduled or permanent records every 3½ years. This change would affect Federal agencies that store unscheduled or permanent records on computer open-reel tapes or tape cartridges.

DATES: Comments must be received on or before April 3, 2000.

ADDRESSES: Send comments to Regulation Comment Desk, NPLN, Room 4100, National Archives and Records Administration, 8601 Adelphi Road, College Park, Maryland, 20740–6001. You may also fax comments to (301) 713–7270.

FOR FURTHER INFORMATION CONTACT: Nancy Allard or Shawn Morton at (301) 713–7360.

SUPPLEMENTARY INFORMATION: This proposed rule eliminates the requirement for Federal agencies to rewind under controlled tension all tapes containing unscheduled or permanent electronic records every 3½ years which is contained in 36 CFR 1234.30(g)(3). This requirement was imposed to address the maintenance and storage of open-reel computer tapes. After tape cartridges became commonplace, computer centers generally did not periodically rewind cartridges. A study conducted by NIST in 1991 concluded that periodic retensioning of computer tape cartridges is unnecessary. In addition, recent electrical engineering studies have questioned whether open-reel tapes should be periodically rewound. Another 1991 NIST study found that the process of rewinding tapes may actually harm them, and would outweigh the benefits associated with storing tapes rewound under controlled tension.

This proposed rule is not a significant regulatory action for the purposes of Executive Order 12866. As required by the Regulatory Flexibility Act, it is hereby certified that this proposed rule will not have a significant impact on a substantial number of small entities because it applies to Federal agencies.

List of subjects in 36 CFR Part 1234

Archives and records, Computer technology.

For the reasons stated in the preamble, the National Archives and Records Administration proposes to amend 36 CFR Part 1234 to read as follows:

PART 1234—ELECTRONIC RECORDS MANAGEMENT

Subpart C—Standards for the Creation, Use, Preservation, and Disposition of Electronic Records

1. The authority citation for part 1234 continues to read as follows:

Authority: 44 USC 2104a; 44 USC 2904c.

§ 1234.30 [Amended]

2. In § 1234.30, remove paragraph (g)(3) and redesignate paragraphs (g)(4) through (g)(7) as paragraphs (g)(3) through (g)(6) respectively.

Dated: January 27, 2000.

John W. Carlin,

Archivist of the United States.

[FR Doc. 00–2385 Filed 2–2–00; 8:45 am]

BILLING CODE 7515–01–P

ENVIRONMENTAL PROTECTION AGENCY

40 CFR Part 52

[MD082–3028b; FRL–6531–2]

Approval and Promulgation of Air Quality Implementation Plans; Maryland; 15 Percent Rate of Progress Plan for the Baltimore Ozone Nonattainment Area

AGENCY: Environmental Protection Agency (EPA).

ACTION: Proposed rule.

SUMMARY: EPA proposes to convert its conditional approval of a State Implementation Plan (SIP) revision submitted by the State of Maryland to a full approval. The revision consists of the 15 percent rate of progress requirements for the Baltimore severe ozone nonattainment area. EPA is also proposing to approve revisions to certain portions of the 1990 base year emissions inventory of volatile organic compound (VOC) and nitrogen oxide (NOx) emissions for the Baltimore nonattainment area. In the Final rules section of this **Federal Register**, EPA is converting its conditional approval of the Baltimore area's 15% Plan to a full approval and approving revisions to the 1990 base year emissions inventory as a direct final rule without prior proposal because the Agency views this as a noncontroversial submittal and anticipates no adverse comments. A detailed rationale for the approval is set forth in the direct final rule. If no adverse comments are received in response to this action, no further activity is contemplated. If EPA receives adverse comments, the direct final rule will be withdrawn and all public comments received will be addressed in a subsequent final rule based on this proposed rule. EPA will not institute a second comment period on this action. Any parties interested in commenting on this action should do so at this time.

DATES: Comments must be received in writing by March 6, 2000.

ADDRESSES: Written comments should be addressed to David L. Arnold, Chief, Ozone and Mobile Sources Branch, Mailcode 3AP21, U.S. Environmental Protection Agency, Region III, 1650 Arch Street, Philadelphia, Pennsylvania 19103. Copies of the documents relevant to this action are available for public inspection during normal business hours at the Air Protection Division, U.S. Environmental Protection Agency, Region III, 1650 Arch Street, Philadelphia, Pennsylvania 19103; and Maryland Department of the Environment, 2500 Broening Highway, Baltimore, Maryland 21224.

FOR FURTHER INFORMATION CONTACT: Kristeen Gaffney, (215) 814–2092, at the EPA Region III address above, or by e-mail at gaffney.kristeen@epa.gov.

SUPPLEMENTARY INFORMATION: For further information, please see the information provided in the direct final action, with the same title, that is located in the ''Rules and Regulations'' section of this **Federal Register** publication.

Dated: January 14, 2000.

Bradley M. Campbell,

Regional Administrator, Region III.

[FR Doc. 00–2176 Filed 2–2–00; 8:45 am]

BILLING CODE 6560–50–P

ENVIRONMENTAL PROTECTION AGENCY

40 CFR Part 52

[MD059–3049b; FRL–6530–9]

Approval and Promulgation of Air Quality Implementation Plans; Maryland, Post-1996 Rate of Progress Plan for Cecil County and Revisions to the 1990 Base Year Emissions Inventory

AGENCY: Environmental Protection Agency (EPA).

ACTION: Proposed rule.

SUMMARY: EPA proposes to approve the State Implementation Plan (SIP) revision submitted by the State of Maryland for the purpose of establishing the three percent per year emission reduction rate-of-progress requirement for the period 1996–1999 for the Maryland portion of the Philadelphia-Wilmington-Trenton ozone nonattainment area, namely Cecil County, Maryland. EPA is also approving revisions to the 1990 base year inventory of ozone precursor emissions submitted by the State of Maryland for Cecil County. EPA is approving the State's SIP submittals as a direct final rule without prior proposal because the Agency views these as noncontroversial submittals and anticipates no adverse comments. A detailed rationale for the approval is set forth in the direct final rule. If no adverse comments are received in response to this action, no further activity is contemplated. If EPA receives adverse comments, the direct final rule will be withdrawn and all public comments received will be addressed in a subsequent final rule based on this proposed rule. EPA will not institute a second comment period on this action. Any parties interested in commenting on this action should do so at this time.

DATES: Comments must be received in writing by March 6, 2000.

ADDRESSES: Written comments should be addressed to David L. Arnold, Chief, Ozone and Mobile Sources Branch, Mailcode 3AP21, U.S. Environmental Protection Agency, Region III, 1650 Arch Street, Philadelphia, Pennsylvania 19103. Copies of the documents relevant to this action are available for public inspection during normal business hours at the Air Protection Division, U.S. Environmental Protection Agency, Region III, 1650 Arch Street, Philadelphia, Pennsylvania 19103; and the Maryland Department of the Environment, 2500 Broening Highway, Baltimore, Maryland, 21224.

FOR FURTHER INFORMATION CONTACT: Kristeen Gaffney, (215) 814–2092, at the EPA Region III address above, or by e-mail at gaffney.kristeen@epa.gov.

SUPPLEMENTARY INFORMATION: For further information, please see the information provided in the direct final action, with the same title, that is located in the ''Rules and Regulations'' section of this **Federal Register** publication.

Dated: January 14, 2000.

Bradley M. Campbell,

Regional Administrator, Region III.

[FR Doc. 00–2174 Filed 2–2–00; 8:45 am]

BILLING CODE 6560–50–P

ENVIRONMENTAL PROTECTION AGENCY

40 CFR Part 52

[CA172–0209b; FRL–6529–5]

Approval and Promulgation of State Implementation Plans; California State Implementation Plan Revision, Kern County Air Pollution Control District

AGENCY: Environmental Protection Agency (EPA).

ACTION: Proposed rule.

SUMMARY: EPA proposes to approve revisions to the California State Implementation Plan (SIP) which concern the control of volatile organic compounds (VOC) from the loading of organic liquids, and fugitive hydrocarbons.

The intended effect of this action is to regulate emissions of VOC in accordance with the requirements of the Clean Air Act, as amended in 1990 (CAA or the Act). In the Final Rules Section of this **Federal Register**, the EPA is approving the state's SIP submittal as a direct final rule without prior proposal because the Agency views this as a noncontroversial revision and anticipates no adverse comments. A detailed rationale for this approval is set forth in the direct final rule. If no adverse comments are received, no further activity is contemplated. If EPA receives adverse comments, the direct final rule will be withdrawn and all public comments received will be addressed in a subsequent final rule based on this proposed rule. The EPA will not institute a second comment period. Any parties interested in commenting should do so at this time.

DATES: Written comments must be received by March 6, 2000.

ADDRESSES: Comments should be addressed to: Christine Vineyard, Rulemaking Office (AIR–4), Air Division, U.S. Environmental Protection Agency, Region IX, 75 Hawthorne Street, San Francisco, CA 94105–3901.

Copies of the rule revisions and EPA's evaluation report of each rule are available for public inspection at EPA's Region 9 office during normal business hours. Copies of the submitted rule revisions are also available for inspection at the following locations:

Rulemaking Office (AIR–4), Air Division, U.S. Environmental Protection Agency, Region IX, 75 Hawthorne Street, San Francisco, CA 94105.

Environmental Protection Agency, Air Docket (6102), 401 ''M'' Street, S.W., Washington, D.C. 20460.

California Air Resources Board, Stationary Source Division, Rule Evaluation Section, 2020 ''L'' Street, Sacramento, CA 95812.

Kern County Air Pollution Control District, 2700 M Street, Suite 302, Bakersfield, CA 93301.

FOR FURTHER INFORMATION CONTACT: Christine Vineyard, [AIR-4], Air Division, U.S. Environmental Protection Agency, Region 9, 75 Hawthorne Street, San Francisco, CA 94105-3901, Telephone: (415) 744–1197).

SUPPLEMENTARY INFORMATION: This document concerns Kern County Air Pollution Control District Rule 413, Organic Liquid Loading, and Rule 414.1, Valves, Pressure Relief Valves, Flanges, Threaded Connections and Process Drains at Petroleum Refineries and Chemical Plants. Both rules were adopted on March 7, 1996 and were submitted to EPA on May 10, 1996 by the California Air Resources Board. For further information, please see the information provided in the direct final action that is located in the rules section of this **Federal Register**.

Dated: January 12, 2000.

Julia Barrow,

Acting Regional Administrator, Region IX.

[FR Doc. 00–2172 Filed 2–2–00; 8:45 am]

BILLING CODE 6560–50–P

ENVIRONMENTAL PROTECTION AGENCY

40 CFR Part 52

[CA 234–0187b; FRL–6529–7]

Approval and Promulgation of State Implementation Plans; California State Implementation Plan Revision, Kern County, San Diego County, San Joaquin Valley Unified Air Pollution Control Districts and South Coast Air Quality Management District

AGENCY: Environmental Protection Agency (EPA).

ACTION: Proposed rule.

SUMMARY: EPA is proposing revisions to the California State Implementation Plan (SIP). This action revises the definitions in the California State Implementation Plan regarding, Kern County Air Pollution Control District (KCAPCD), San Diego County Air Pollution Control District (SDCAPCD), San Joaquin Valley Unified Air Pollution Control District (SJVUAPCD) and South Coast Air Quality Management District (SCAQMD).

The intended effect of this action is to incorporate these changes to various definitions and to update the Exempt Compound list in KCAPCD, SDCAPCD, SJVUAPCD, and SCAQMD rules to be consistent with the revised federal and state VOC definitions. EPA is proposing approval of these revisions to be incorporated into the California SIP for the attainment of the national ambient air quality standards (NAAQS) for ozone under title I of the Clean Air Act (CAA or the Act). In the Final Rules Section of this **Federal Register**, the EPA is approving the state's SIP submittal as a direct final rule without prior proposal because the Agency views this as a noncontroversial revision and anticipates no adverse comments. A detailed rationale for this approval is set forth in the direct final rule. If no adverse comments are received, no further activity is contemplated. If EPA receives adverse comments, the direct final rule will be withdrawn and all public comments received will be addressed in a subsequent final rule based on this proposed rule. The EPA will not institute a second comment period. Any parties interested in commenting should do so at this time.

DATES: Written comments must be received by March 6, 2000.

ADDRESSES: Comments should be addressed to: Andrew Steckel, Rulemaking Office (AIR–4), Air Division, U.S. Environmental Protection Agency, Region IX, 75 Hawthorne Street, San Francisco, CA 94105–3901.

Copies of the rule revisions and EPA's evaluation report of each rule are available for public inspection at EPA's Region 9 office during normal business hours. Copies of the submitted rule revisions are also available for inspection at the following locations:

California Air Resources Board, Stationary Source Division, Rule Evaluation Section, 2020 ''L'' Street, Sacramento, CA 95812

Kern County Air Pollution Control District Southeast Desert, 2700 ''M'' Street, Suite 302, Bakersfield, CA 93301–2370

San Diego County Air Pollution Control District, 9150 Chesapeake Dr., San Diego, CA 92123–1096

San Joaquin Valley Unified Air Pollution Control District, 1990 E. Gettysburg, Fresno, CA 93726

South Coast Air Quality Management District, 21865 E. Copley Dr., Diamond Bar, CA 91765–4182

FOR FURTHER INFORMATION CONTACT: Cynthia G. Allen, [A–4], Air Division, U.S. Environmental Protection Agency,

Region 9, 75 Hawthorne Street, San Francisco, CA 94105–3901, Telephone: (415) 744–1189.

SUPPLEMENTARY INFORMATION: This document concerns Kern County Air Pollution Control District Rule 102, Definitions, San Diego County Air Pollution Control District Rule 2, Definitions and Rule 3, Standard Conditions, San Joaquin Valley Unified Air Pollution Control District Rule 1020, Definitions, and South Coast Air Quality Management District Rule 102, Definition of Terms, submitted on September 7, 1999, by the California Air Resources Board. For further information, please see the information provided in the direct final action that is located in the rules section of this **Federal Register**.

Dated: January 10, 2000.

Felicia Marcus,

Regional Administrator, Region IX.

[FR Doc. 00–2170 Filed 2–2–00; 8:45 am]

BILLING CODE 6560–50–P

ENVIRONMENTAL PROTECTION AGENCY

40 CFR Part 52

[SD–001–0007b & SD–001–0008b; FRL–6527–3]

Clean Air Act Approval and Promulgation of State Implementation Plan; South Dakota; Revisions to Performance Testing Regulation

AGENCY: Environmental Protection Agency (EPA).

ACTION: Proposed rule.

SUMMARY: The EPA is proposing to take direct final action to approve revisions to the South Dakota State implementation plan (SIP) submitted on May 2, 1997 and May 6, 1999 regarding the testing of new fuels or raw materials. Specifically, the State adopted a new provision in Chapter 74:36:11, Performance Testing, of the Administrative Rules of South Dakota (ARSD) that allows permitted sources to request permission to test a new fuel or raw material, to determine if it is compatible with existing equipment and to determine air emission rates, before requesting a permit amendment or modification.

In the ''Rules and Regulations'' section of this **Federal Register**, EPA is approving the State's SIP revision as a direct final rule without prior proposal because the Agency views this as a noncontroversial SIP revision and anticipates no adverse comments. A detailed rationale for the approval is set forth in the preamble to the direct final rule. If EPA receives no adverse comments, EPA will not take further action on this proposed rule. If EPA receives adverse comments, EPA will withdraw the direct final rule and it will not take effect. EPA will address all public comments in a subsequent final rule based on this proposed rule. EPA will not institute a second comment period on this action. Any parties interested in commenting must do so at this time.

DATES: Comments must be received in writing on or before March 6, 2000.

ADDRESSES: Written comments may be mailed to Richard R. Long, Director, Air and Radiation Program, Mailcode 8P–AR, Environmental Protection Agency (EPA), Region VIII, 999 18th Street, Suite 500, Denver, Colorado, 80202. Copies of the documents relative to this action are available for inspection during normal business hours at the Air and Radiation Program, Environmental Protection Agency, Region VIII, 999 18th Street, Suite 500, Denver, Colorado 80202–2466. Copies of the State documents relevant to this action are available for public inspection at the Air Quality Program, Department of Environment and Natural Resources, Joe Foss Building, 523 East Capitol, Pierre, South Dakota 57501.

FOR FURTHER INFORMATION CONTACT: Vicki Stamper, EPA Region VIII, (303) 312–6445.

SUPPLEMENTARY INFORMATION: See the information provided in the Direct Final action of the same title which is located in the Rules and Regulations section of this **Federal Register**.

Authority: 42 U.S.C. 7401 *et seq.*

Dated: January 6, 2000.

Jack W. McGraw,

Acting Regional Administrator, Region VIII.

[FR Doc. 00–2168 Filed 2–2–00; 8:45 am]

BILLING CODE 6560–50–P

DEPARTMENT OF THE INTERIOR

Fish and Wildlife Service

50 CFR Part 17

Endangered and Threatened Wildlife and Plants; 90-Day Finding for a Petition To Delist the Northern Spotted Owl From the List of Threatened and Endangered Species

AGENCY: Fish and Wildlife Service, Interior.

ACTION: Notice of 90-day petition finding.

SUMMARY: We, the U.S. Fish and Wildlife Service (Service), announce a 90-day finding for a petition to delist the northern spotted owl (*Strix occidentalis caurina*) under the Endangered Species Act of 1973, as amended (Act). We find that the petitioner did not present substantial scientific or commercial information indicating that the delisting of the northern spotted owl may be warranted.

DATES: The finding announced in this document was made on January 18, 2000.

ADDRESSES: Data, information, comments or questions concerning this petition should be sent to the Field Supervisor, U.S. Fish and Wildlife Service, Western Washington Office, 510 Desmond Drive SE, Suite 102, Lacey, Washington 98503. The petition finding, and comments and material received, will be available for public inspection, by appointment, during normal business hours at the above address.

FOR FURTHER INFORMATION CONTACT: Dr. L. Karolee Owens at the above address (telephone 360/753–4369; facsimile 360/753–4369).

SUPPLEMENTARY INFORMATION:

Background

Section 4(b)(3)(A) of the Act, requires that we make a finding on whether a petition to list, delist, or reclassify a species presents substantial scientific or commercial information to demonstrate that the petitioned action may be warranted. This finding is based upon all information submitted with and referenced in the petition and all other information available to us at the time the finding is made. To the maximum extent practicable, this finding is to be made within 90 days following receipt of the petition, and promptly published in the **Federal Register**. If the finding is positive, section 4(b)(3)(B) of the Act requires us to promptly commence a review of the status of the species and to disclose our findings within 12 months.

The processing of this petition finding conforms with our Listing Priority Guidance published in the **Federal Register** on October 22, 1999 (64 FR 57114). The guidance clarifies the order in which we will process rulemakings. Highest priority is processing emergency listing rules for any species determined to face a significant and imminent risk to its well-being (Priority 1). Second priority (Priority 2) is processing final determinations on proposed additions to the lists of endangered and threatened wildlife and

plants. Third priority is processing new proposals to add species to the lists. The processing of administrative petition findings (petitions filed under section 4 of the Act) is the fourth priority. The processing of critical habitat determinations (prudency and determinability decisions) and proposed or final designations of critical habitat will no longer be subject to prioritization under the Listing Priority Guidance. The processing of this petition finding is a Priority 4 action and is being completed in accordance with the current Listing Priority Guidance.

We have made a 90-day finding on a petition to delist the northern spotted owl (*Strix occidentalis caurina*). The petition, dated January 18, 1999, was submitted by Dr. Richard A. Gierak of Yreka, California, and we received it on February 2, 1999.

The petition identified three subspecies of spotted owl, including the northern spotted owl (*Strix occidentalis caurina*), the California spotted owl (*Strix occidentalis occidentalis*), and the Mexican spotted owl (*Strix occidentalis lucida*). The petitioner asked that the ''spotted owl'' be removed from the ''endangered list.'' The California spotted owl, however, is not a listed subspecies. The Mexican and northern spotted owls, subjects of separate listing actions, are both listed as threatened. The Mexican spotted owl was listed on March 16, 1993 (58 FR 14271), and critical habitat was designated for this subspecies on June 6, 1995 (60 FR 29914). The northern spotted owl was listed as threatened on June 26, 1990 (55 FR 26194), and critical habitat for the subspecies was designated on January 15, 1992 (57 FR 1796). Since the information presented in the petition refers only to northern spotted owls, this 90-day petition finding addresses only this subspecies. The petition is based on statements referring to the status and listing of the northern spotted owl from the National Center for Policy Analysis web site. There is no documentation of the source(s) of the information on the web site, and no scientific supporting documentation was included with the petition.

The petitioner asserts that the northern spotted owl should be delisted because the original data were in error. This assertion is based on an increased number of known northern spotted owl pairs, their use of forest areas that have been harvested and regrown, and the economic effects of the listing.

Documentation of greater numbers of northern spotted owls since the first population estimates results from expanded knowledge and increased survey efforts, and not from an increasing northern spotted owl population. Additionally, listing and any consideration of delisting of the northern spotted owl must be based on its status as reflected by the required analysis of the five factors specified under section 4 of the Act, and not solely on the basis of the number of pairs. To delist a species, the analysis must indicate that none of these five factors are affecting the species such that it is in danger of extinction, or likely to become endangered, within the foreseeable future. For the northern spotted owl, this will require stable or increasing and self-sustaining populations and conservation of adequate suitable habitat to allow the species to survive without protection of the Act.

Current data do not suggest that the decision to list the northern spotted owl was based on erroneous data, or that the species has recovered. Observations of banded northern spotted owls in 15 study areas in Washington, Oregon, and California were used for the recently released 1998 demographic analysis of northern spotted owls (Franklin *et al.* 1999). In this analysis, these observations were used to estimate survival and reproductive rates, and to determine if the population is increasing, decreasing, or stable. The results indicate there has been a range-wide northern spotted owl population decline of about 3.9 percent per year during the years 1985 to 1998. The analysis does not indicate, however, a range-wide decline in reproductive rates and female survival rates, which varied among years and among study areas. Reproductive rates and female survival rates can be relatively stable, but still be lower than necessary to support a stable population. The result is a declining population. Although these results indicate that the rate of the northern spotted owl population decline is slower than was evident in the 1993 analysis for the development of the Northwest Forest Plan (U.S. Department of Agriculture and U.S. Department of Interior 1994), uncertainty still exists regarding the range-wide health of the northern spotted owl population.

Northern spotted owls are known to use a wide variety of habitat types and forest stand conditions throughout their distribution (57 FR 1796). Northern spotted owls use a wide array of forest types for foraging, including open and fragmented habitat. Habitat that meets the species' needs for nesting and roosting also provides foraging habitat. Some habitat that supports foraging, however, may be inadequate for nesting and roosting. The presence of northern spotted owls, or even breeding pairs, in forest stands that have been harvested and regrown do not present sufficient evidence that these habitats are occupied by self-sustaining populations.

Economic analysis is not a factor in listing a species, but is used to evaluate the economic consequences of designating critical habitat in selected areas. We considered the economic and other relevant impacts prior to making a final decision on the size and scope of critical habitat for the northern spotted owl. Some areas were excluded due to economic and other relevant information, including information and comments received during the public comment period and public hearings following the publication of the proposed rule to designate critical habitat (56 FR 40001). Final critical habitat units for the northern spotted owl were designated only on Federal lands (57 FR 1796).

When evaluating petitions for delisting of species under the Act, our guidelines state that a ''not-substantial information'' finding be made when a petition to delist a species presents no new information indicating the original data for listing the species may be in error (U.S. Fish and Wildlife Service 1996). We have reviewed the petition and other available literature and information. This review of additional information includes the recently released 1998 demographic analysis, which indicates a continued range-wide decline of the northern spotted owl population. We find the petition does not present substantial information to indicate delisting the northern spotted owl may be warranted.

References Cited

Franklin, A.B., K.P. Burnham, G.C. White, R.J. Anthony, E.D. Forsman, C. Schwarz, J.D. Nichols, and J. Hines. 1999. Range-wide status and trends in northern spotted owl populations. Unpublished report. 71 pp.

U.S. Department of Agriculture and U.S. Department of the Interior. 1994. Final supplemental environmental impact statement on management of habitat for late-successional and old-growth forest related species within the range of the northern spotted owl. Portland, Oregon.

U.S. Fish and Wildlife Service and National Marine Fisheries Service. 1996. Endangered species petition management guidance. 20 pp. and appendices.

Author: The primary author of this finding is Dr. L. Karolee Owens, Fish and Wildlife Service, Western Washington Office (see **ADDRESSES** section).

Authority

The authority for this action is the Endangered Species Act (16 U.S.C. 1531 *et seq.*).

Dated: January 18, 2000.

Jamie Rappaport Clark,

Director, Fish and Wildlife Service.

[FR Doc. 00–2311 Filed 2–2–00; 8:45 am]

BILLING CODE 4310–55–P

DEPARTMENT OF COMMERCE

National Oceanic and Atmospheric Administration

50 CFR Part 622

[I.D. 012100C]

South Atlantic Fishery Management Council; Public Hearings

AGENCY: National Marine Fisheries Service (NMFS), National Oceanic and Atmospheric Administration, Commerce.

ACTION: Notice of public hearings; request for comments.

SUMMARY: The South Atlantic Fishery Management Council (Council) will convene two public hearings regarding draft options for Amendment 1 to the Golden Crab Fishery Management Plan (FMP). The amendment addresses gear restrictions, permitting processes, vessel size limits, crew safety and zoning/participation conflicts in the golden crab fishery.

DATES: The Council will accept written comments on the draft options paper through March 1, 2000. The public hearings will be held in February. See **SUPPLEMENTARY INFORMATION** for specific dates and times of the public hearings.

ADDRESSES: Written comments should be sent to Bob Mahood, Executive Director, South Atlantic Fishery Management Council, One Southpark Circle, Suite 306, Charleston, SC 29407–4699. Copies of the draft options paper are available from Kim Iverson, South Atlantic Fishery Management Council, One Southpark Circle, Suite 306, Charleston, SC 29407–4699; telephone: 843–571–4366. The public hearings will be held in Florida and South Carolina. See **SUPPLEMENTARY INFORMATION** for specific hearing locations.

FOR FURTHER INFORMATION CONTACT: Kim Iverson, South Atlantic Fishery Management Council, One Southpark Circle, Suite 306, Charleston, SC 29407–4699; telephone: 843–571–4366; fax: 843–769–4520; E-mail address: kim.iverson@safmc.noaa.gov.

SUPPLEMENTARY INFORMATION:

Time and Location for Public Hearings

Public hearings for the draft options paper for Amendment 1 to the Golden Crab Fishery Management Plan will be held at the following locations, dates, and times.

1. February 22, 2000, 6:00 p.m., Best Western Hotel, 111 South Crome Ave., Florida City, FL 33034; telephone: 305–451–0056.

2. February 23, 2000, 6:00 p.m., Town & Country Inn, 2008 Savannah Highway, Charleston, SC 29407; telephone: 843–571–1000.

Copies of the draft options paper can be obtained from the Council (see **ADDRESSES**).

Special Accommodations

These meetings are physically accessible to people with disabilities. Requests for sign language interpretation or other auxiliary aids should be directed to the Council office (see **ADDRESSES**) by March 15, 2000.

Dated: January 24, 2000.

Bruce C. Morehead,

Acting Director, Office of Sustainable Fisheries, National Marine Fisheries Service.

[FR Doc. 00–2404 Filed 2–2–00; 8:45 am]

BILLING CODE 3510–22–F

Notices

Federal Register
Vol. 65, No. 23
Thursday, February 3, 2000

This section of the FEDERAL REGISTER contains documents other than rules or proposed rules that are applicable to the public. Notices of hearings and investigations, committee meetings, agency decisions and rulings, delegations of authority, filing of petitions and applications and agency statements of organization and functions are examples of documents appearing in this section.

DEPARTMENT OF AGRICULTURE

Animal and Plant Health Inspection Service

[Docket No. 98–116–2]

Animal Welfare; Farm Animals Used for Nonagricultural Purposes

AGENCY: Animal and Plant Health Inspection Service, USDA.

ACTION: Notice.

SUMMARY: We are adopting two guides: The ''Guide for the Care and Use of Agricultural Animals in Agricultural Research and Teaching,'' published by the Federation of Animal Science Societies, and the ''Guide for the Care and Use of Laboratory Animals,'' published by the Institute of Laboratory Animal Resources. We are adopting these guides to assist regulated entities in meeting the standards in the regulations as they apply to the handling, care, treatment, and transportation of farm animals used for nonagricultural purposes (primarily research and exhibition). The recommendations in these guides represent the most current thinking on appropriate practices for the handling, care, treatment, and transportation of farm animals for nonagricultural purposes.

EFFECTIVE DATE: March 6, 2000.

FOR FURTHER INFORMATION CONTACT: Dr. Richard Watkins, Animal Care, APHIS, USDA, 4700 River Road Unit 84, Riverdale, MD 20737–1234; (301) 734–4981.

SUPPLEMENTARY INFORMATION:

Background

The Animal Welfare Act (AWA) (7 U.S.C. 2131 *et seq.*) authorizes the Secretary of Agriculture to promulgate standards governing the humane handling, care, treatment, and transportation of certain animals by dealers, exhibitors, and other regulated entities. The Secretary of Agriculture has delegated the responsibility for enforcing the AWA to the Administrator of the Animal and Plant Health Inspection Service (APHIS). Regulations established under the AWA are contained in 9 CFR parts 1, 2, and 3. The APHIS Animal Care program ensures compliance with the AWA regulations by conducting inspections of premises with regulated animals.

APHIS is responsible for regulating the humane handling, care, treatment, and transportation of farm animals when they are used for nonagricultural purposes, such as for research or exhibition. APHIS inspects regulated entities that use farm animals under the regulations in 9 CFR part 3, subpart F.

On March 3, 1999, we published a notice in the **Federal Register** (64 FR 10268–10269, Docket No. 98–116–1) stating that we were considering adopting two guides: The ''Guide for the Care and Use of Agricultural Animals in Agricultural Research and Teaching'' (the Ag Guide), published by the Federation of Animal Science Societies, and the ''Guide for the Care and Use of Laboratory Animals'' (the ILAR Guide), published by the Institute of Laboratory Animal Resources. We believed the guides would help regulated entities understand how to meet the standards in the regulations pertaining to the humane handling, care, treatment, and transportation of farm animals when they are used for nonagricultural purposes. We requested public comment on whether to adopt these two guides.

We solicited comments for 60 days ending May 3, 1999. We received 23 comments by that date. They were from veterinarians and veterinary associations, research facilities, animal welfare organizations, a biomedical research association, and a zoo and aquarium association.

Several commenters supported our adoption of these two guides. Three commenters specified that our adoption of these guides would help maximize the similarities between AWA standards and the Public Health Service Policy on the Humane Care and Use of Laboratory Animals. Several commenters had questions about how regulated entities would be expected to use the guides, and other commenters had criticisms about the content of the guides. The comments are discussed below by topic.

Several commenters wanted clarification on how APHIS would use the guides during inspections. One commenter asked if recommendations in the guides would become APHIS inspection standards that must be met. Another commenter asked how APHIS would decide which parts of the guide are to be followed and which are not.

We stated in the March 3 notice that our adoption of these guides would be intended only as guidance and that it would not create or confer any rights for or on any person and would not operate to bind APHIS or the public. In practical terms, this means that these guides will not replace the regulations in subpart F as the standards that regulated entities are expected to meet. During inspections, APHIS inspectors will review the care of farm animals for compliance with the regulations in subpart F. We will not require regulated entities to comply with recommendations in the guides.

However, we do believe that these guides represent the most current thinking on appropriate practices for the handling, care, treatment, and transportation of farm animals used for nonagricultural purposes. Because the regulations in subpart F are not species specific, we believe that would be helpful for regulated entities to consult guidance in order to adequately meet the regulations. For example, the regulations require that animals be fed a diet sufficient to maintain the animals in good health, consistent with the age, species, condition, size, and type of animal in question. We expect that regulated entities would find it helpful to consult some guidance to determine what diet would be appropriate for sheep, for example, in order to meet this requirement. By adopting the Ag Guide and the ILAR Guide, we are giving notice that we consider the recommendations in these two guides to be authorities on the care of farm animals as they relate to the requirements in the regulations. If a regulated entity is seeking guidance on meeting the regulations, we would suggest they start with these two guides. If regulated entities prefer, they may use other guidance, as long as the practices they ultimately adopt meet the requirements of the regulations.

We stated in the March 3 notice that the ILAR Guide and the Ag Guide contain recommendations concerning

animals and areas that are not covered under the regulations and that those portions of the guides that do not relate to the regulations would not be used for our program purposes. For example, both guides contain recommendations on occupational safety and health programs for facility employees. Our regulations do not address these issues.

One commenter asked whether APHIS would provide notice when the guides are revised and allow comments on adopting the revisions.

Most recently, the guides have been updated approximately every 10 years. The current ILAR Guide was published in 1996, replacing the previous 1985 edition. The current Ag Guide was published in 1999, replacing the previous 1988 edition. When these guides are updated, we will review the changes and make a determination at that time.

We stated in the March 3 notice that the Ag Guide could be used when farm animals are maintained in a traditional agricultural setting and the ILAR Guide could be used when farm animals are maintained in a laboratory setting. One commenter said that, since the ILAR Guide does not specifically address farm animals, its adoption would result in no improvement for farm animals in laboratory settings. The commenter suggested that we adopt both guides for both agricultural and laboratory settings.

The ILAR Guide is not species-specific, in general. However, it does state that its recommendations are applicable to farm animals, and it provides species-specific recommendations for farm animals in a few instances. In most cases, we believe that when farm animals are kept in a laboratory setting, the ILAR Guide is the appropriate guide to consult. The Ag Guide is written to address farm animals kept in agricultural settings. However, there may be elements of the Ag Guide that would be helpful to facilities that house farm animals in laboratories, and facilities could consult both guides.

One commenter said that we should create our own guide on farm animals after review of the Ag Guide, the ILAR Guide, and other available guides. One commenter suggested two other guides that we should adopt. Several commenters said that we should promulgate standards specific to farm animals instead of adopting guidance.

We considered these options prior to choosing to adopt the Ag Guide and the ILAR Guide. We have chosen to adopt guidance at this time, instead of promulgating regulations. We have determined that these guides represent the most current and complete scientific information available on the humane care of farm animals used for nonagricultural purposes, and we do not believe that creating our own guides would be an improvement over what these two guides already offer. Adoption of these guides does not prevent us from promulgating standards specific to farm animals at a later date.

One commenter said that the Ag Guide and the ILAR Guide are dense documents, requiring significant time and effort to understand, and that students and nonscientist caretakers may find them difficult to apply for this reason. Another commenter said that some aspects of the Ag Guide are ambiguous, making them difficult to apply.

We do not intend that every employee of a regulated facility must regularly consult these guides. Regulated entities may use these guides at their own discretion, depending on their needs and resources. We anticipate that many facilities already use or will choose to use these guides in formulating operating procedures for their facilities. In this case, the guides themselves may not need to be consulted in depth by students and nonscientist caretakers.

In some sections, the Ag Guide uses language such as ''may'' and references other publications to support its statements. Understanding of the care and use of farm animals in research is constantly evolving. Nevertheless, we believe the Ag Guide presents the most complete and current information available.

One commenter said that neither guide provides appropriate guidance for the care of farm animals used in exhibition. Another commenter, who supported adoption of the guides, said that flexibility would be necessary in their use to address the needs of traveling exhibitors.

Both guides are specifically written as guidance for researchers. We believe elements of the Ag Guide, in particular, would also be useful for exhibitors. Even for traveling exhibitors, the Ag Guide offers recommendations on transportation of farm animals that we believe are appropriate. However, we recognize that exhibitors have special needs and different goals than researchers and would apply these guides only as appropriate.

One commenter questioned our use of the term ''nonagricultural,'' and asserted that the application of biotechnology to traditional agricultural species does not automatically make the use of these animals nonagricultural.

We are unclear as to how the commenter is defining ''nonagricultural.'' Our use of the term stems from the definition of ''animal'' in the AWA, which defines what animals we are authorized to regulate. The term ''animal'' means any live or dead warmblooded animal, but it excludes ''horses not used for research purposes and other farm animals, such as, but not limited to livestock or poultry, used or intended for use as food or fiber, or livestock or poultry used or intended for improving animal nutrition, breeding, management, or production efficiency, or for improving the quality of food or fiber.'' We consider use of an animal for food or fiber, for improving animal nutrition, breeding, management, or production efficiency, or for improving the quality of food or fiber to be agricultural, and we are not authorized to regulate these activities under the AWA.

The commenter also suggested that animals kept in an agricultural setting should not be subject to APHIS oversight, regardless of use. However, the AWA authorizes APHIS to regulate animals used or intended for use in research, testing, experimentation, or exhibition purposes or as a pet, regardless of whether the animal is maintained in a laboratory setting or a typical farm-type setting.

We received numerous comments critical of the Ag Guide in particular. Several commenters said that the Ag Guide is heavily influenced by standard agricultural commercial practices, endorses management practices designed for maximum agricultural production, and does not reflect the most current thinking on humane treatment of farm animals used for nonagricultural purposes. A few commenters further said that the Ag Guide would be unsuitable guidance for nonagricultural researchers because practices discussed in the guide would be stressful on the animals, resulting in unreliable research results.

We disagree with the commenters and continue to believe that the Ag Guide represents the most current and complete scientific information available on appropriate practices for the handling, care, treatment, and transportation of farm animals used for nonagricultural purposes when they are maintained in an agricultural setting.

One commenter said there are discrepancies between our regulations and the recommendations in the Ag Guide. For example, the commenter said § 3.128 requires that enclosures provide sufficient space for each animal to make normal postural and social adjustments, but the Ag Guide includes recommendations on the use of farrowing crates for sows, which restrict the sows' movements.

Adoption of the Ag Guide will not reduce any of the requirements in the current regulations, nor will any recommendations in the guide supersede the requirements of the regulations. Regarding the example given above, there may be times when it is scientifically justified under a research protocol to restrict an animal's space. Such exceptions to the regulatory requirements can be made with approval by a research facility's Institutional Animal Care and Use Committee. In other cases, regulated entities will be expected to comply with the requirements of the regulations, regardless of any recommendations in the Ag Guide or any other reference material.

One commenter criticized the use of the phrase ''professional judgment'' throughout the Ag Guide and said the guide's use of the word ''must'' is too limited.

The Ag Guide is a guide, not a regulation. Our adoption of these guides is intended only to offer guidance to regulated entities.

One commenter said the Ag Guide's recommendations on feeding and watering during transportation are inadequate.

The regulations in § 3.139 contain food and water requirements for farm animals during transportation. The regulations require that animals be offered potable water within 4 hours prior to being transported and that they be provided with potable water at least every 12 hours after transportation is initiated. The regulations also require, with a few exceptions, that all animals be fed at least once in every 24-hour period. We find nothing in the Ag Guide in contradiction of these requirements. Nevertheless, the requirements of the regulations are the requirements that must be met by regulated entities, and nothing in the guide can be used to allow less stringent requirements than those in the regulations.

Several commenters were concerned with the Ag Guide's acceptance of certain practices that may cause discomfort or some pain; for example, beak trimming, comb trimming, dehorning, and tail docking.

The examples given by commenters are established standard animal husbandry practices. Employment of these practices is changing, and there is increased consideration among regulated entities regarding the use of local anesthetics and the development of methods that minimize discomfort for the animals. The Ag Guide encourages methods, including anesthesia and recommendations on optimum ages for these procedures, to minimize pain and discomfort in the animals.

One commenter was concerned that the public was never given an opportunity to provide comments on the current edition of the Ag Guide prior to its being finalized.

The Ag Guide is not published by APHIS and, therefore, we have no control over whether the public is able to comment on its content prior to it being finalized. We have, however, given the public opportunity to comment on our adoption of the content of the Ag Guide.

In our notice, we said that any institution that receives funding from the National Institutes of Health (NIH) or that is accredited by an organization such as the Association for Assessment and Accreditation of Laboratory Animal Care International (AAALAC International) must use the Ag Guide and the ILAR Guide. One commenter said that this is incorrect. The commenter said that NIH and AAALAC International both mandate the use of the ILAR Guide, but that NIH does not mandate use of the Ag Guide, and AAALAC International uses the Ag Guide selectively.

The commenter is correct in pointing out that the Ag Guide is cited as a resource by both organizations, but its use is not mandated as a requirement for receiving funding. We wish to correct our inadvertent misstatement. We should note that AAALAC International referenced the previous version of the Ag Guide only selectively, but has adopted the revised (1999) version of the Ag Guide as a reference in its entirety.

One commenter said that APHIS should inspect AAALAC International-accredited research facilities between AAALAC International inspections in order to reduce the inspection frequency for such facilities. The commenter said the facilities could assure APHIS annually that they remain fully accredited and submit the date of the last AAALAC International inspection.

This comment is not relevant to the adoption of the ILAR Guide and the Ag Guide. Nevertheless, we offer the following response. AAALAC International conducts site visits of accredited facilities at approximately 3-year intervals. The AWA mandates that we inspect research facilities at least once each year. APHIS' inspections are unannounced to ensure we are able to view the facility as it is normally operated. At this time, we believe any effort to coordinate our inspections with the inspections of another institution may compromise our ability to conduct inspections unannounced.

Based on the rationale given in the March 3 notice and in this document, we are adopting the Ag Guide and the ILAR Guide to assist regulated entities in meeting the standards in the regulations as they apply to the handling, care, treatment, and transportation of farm animals used for nonagricultural purposes.

Done in Washington, DC, this 27th day of January 2000.

Bobby R. Acord,

Acting Administrator, Animal and Plant Health Inspection Service.

[FR Doc. 00–2382 Filed 2–2–00; 8:45 am]

BILLING CODE 3410–34–U

DEPARTMENT OF AGRICULTURE

Animal and Plant Health Inspection Service

[Docket No. 99–069–1]

Public Meeting; Animal Care

AGENCY: Animal and Plant Health Inspection Service, USDA.

ACTION: Notice of public meeting.

SUMMARY: The Animal and Plant Health Inspection Service plans to hold a public meeting to discuss issues related to the humane care and treatment of exhibition animals regulated under the Animal Welfare Act.

DATES: The public meeting will be held on Tuesday, March 7, 2000, beginning at 8:30 a.m. and ending at 5p.m. On-site registration and sign-in for preregistered participants will take place from 7 a.m. to 8:30 a.m.

ADDRESSES: The public meeting will be held at the USDA Conference Center, 4700 River Road, Riverdale, MD.

FOR FURTHER INFORMATION CONTACT: Animal Care, APHIS, 4700 River Road Unit 84, Riverdale, MD 20737–1234; (301) 734–7833.

SUPPLEMENTARY INFORMATION: The Animal and Plant Health Inspection Service (APHIS) will hold a public meeting in Riverdale, MD, on March 7, 2000, to exchange information with the public about the humane care and treatment of exhibition animals regulated under the Animal Welfare Act. The meeting will include a general session followed by four workshops to run concurrently. The workshops will be offered twice, based on the public's response, to allow for increased participation. The tentative agenda for the public meeting is as follows:

8:30 a.m.–10 a.m.—General Session
10 a.m.–10:30 a.m.—Break
10:30 a.m.–12:30 p.m.—Workshops Session I

12:30 p.m.–1:30 p.m.—Lunch Break

1:30 p.m.–3:30 p.m.—Workshops Session II

3:30 p.m.–4 p.m.—Break

4 p.m.–5 p.m.—General Session/Wrap-up

The morning general session will include updates by U.S. Department of Agriculture (USDA) officials on current Animal Welfare Act issues and program initiatives focusing on, but not limited to, exhibition animal issues. Time will be allotted during the morning general session for open dialogue between USDA and the public. We are tentatively scheduling the following workshop topics:

1. Zoos
2. Circuses
3. Dealers, Research, and Transportation
4. Training and Handling of Potentially Dangerous Animals

Animal Care personnel will present information on issues related to the workshop topics and allow for discussion with the public led by an APHIS facilitator.

Workshop Issues

You may submit issues that you want presented by Animal Care during the workshops. Please specify the issue and the related workshop topic and submit no later than February 15, 2000, to Animal Care, Attention: Public Meeting, APHIS, 4700 River Road Unit 84, Riverdale, MD 20737–1234; or by fax at either (301) 734–4978 or (301) 734–4993.

Advance Registration

Advance registration is requested by February 29, 2000. Although advance registration is not required, attendance may be limited based on public response and conference center accommodations. There is no registration fee.

An advance registration form is printed below. Alternatively, an advance registration form is available via the Internet on Animal Care's home page at http://www.aphis.usda.gov/ac. Please fill out the form completely and submit it either by mail to Animal Care, Attention: Public Meeting, APHIS, 4700 River Road Unit 84, Riverdale, MD 20737–1234; or by fax at either (301) 734–4978 or (301) 734–4993.

If you have any questions about registration, contact Sue Gallagher, Program Specialist, Animal Care, on (301) 734–8877.

To: _____
No. of pages: _____
Date: _____

Advance Registration Form

Animal Care Public Meeting

March 7, 2000; 8:30 a.m.–5:00 p.m., 4700 River Road, Riverdale, MD 20737

Advance registration requested by February 29, 2000 (no fee required)

Name: _____
Organization: _____
Address: _____
_____
Phone: _____
Fax: _____

Please indicate the workshop you plan to attend during each workshops session (topics are subject to change):

10:30 a.m.–12:30 p.m.

—Zoos
—Circuses
—Dealers, Research, and Transportation
—Training and Handling of Potentially Dangerous Animals

1:30 p.m.–3:30 p.m.

—Zoos
—Circuses
—Dealers, Research, and Transportation
—Training and Handling of Potentially Dangerous Animals

Please either:

- Fax completed registration form to (301) 734–4978 or (301) 734–4993, or
- Mail completed registration form to Animal Care, Attn: Public Meeting, 4700 River Road Unit 84, Riverdale, MD 20737–1234.

For questions concerning registration, contact Sue Gallagher at (301) 734–8877.

If you require special accommodations, such as a sign language interpreter, for the meeting, please indicate below:

_____
_____
_____

Travel Information

If traveling to the metro area by air, Baltimore-Washington International (BWI) and Ronald Reagan National Airports are each located within a 1-hour drive from the USDA Center. Dulles International Airport is located within a 1½-hour drive from the USDA Center. Airport shuttle services are available via independent contracted service fleets. Check with your hotel desk for additional shuttle or taxi information, or phone Super Shuttle (servicing BWI, Ronald Reagan National, and Dulles International Airports) at (800) 258–3826 or (410) 859–0803, or Airport Connection (servicing BWI Airport) at (800) 284–6066 or (301) 352–2400.

The USDA Center is located less than 1 mile from the College Park-University of Maryland metro rail station (Green Line toward Greenbelt). Bus service is provided between the College Park-University of Maryland station and the USDA Center by both metro bus (F6 and R12 bus lines) and certain University of Maryland shuttle buses. The fee for the metro bus is $1.10. The University of Maryland shuttle bus is free.

If traveling by car, please note that a fee of $2 is required to enter the parking lot at the USDA Center. The machine takes $1 bills or quarters.

Travel directions and information are available via the Internet at Animal Care's homepage at http://www.aphis.usda.gov/ac.

Security Procedures

Upon entering the building, visitors should inform security personnel that they are attending the Animal Care public meeting. Identification is required. Security personnel will direct visitors to the registration tables located outside the conference center on the first floor. Registration is necessary for all participants, including those registered in advance. Visitor badges must be worn throughout the day.

Lodging Information

We encourage out-of-town participants to make reservations as soon as possible due to potential peak volumes at local hotels at the time of the meeting. Rooms at all hotels are on a space available basis. The following hotels are located in the Riverdale area: Greenbelt Holiday Inn, 7200 Hanover Drive, Greenbelt, MD 20770, (800) 280–4188, (301) 982–7000.

A limited number of rooms have been reserved until February 21, 2000, at a rate of $84 plus tax at the Greenbelt Holiday Inn. You must identify yourself as a ''USDA Animal Care'' attendee when making reservations. Hotel shuttle service is available to and from the USDA Center. Make arrangements with the Holiday Inn front desk: College Park Holiday Inn, 10000 Baltimore Boulevard, College Park, MD 20740, (800) 465–4329, (301) 345–6700.

A limited number of rooms have been reserved until February 21, 2000, at a rate of $89 plus tax at the College Park Holiday Inn. You must identify yourself as an ''Animal Care Public Meeting'' or ''ACP'' attendee when making reservations. Hotel shuttle service is available to and from the USDA Center. Make arrangements with the Holiday Inn front desk: Greenbelt Courtyard-Marriott, 6301 Golden Triangle Drive, Greenbelt, MD 20770, (800) 321–2211, (301) 441–3311.

There are no special lodging rates offered at the Greenbelt Courtyard-Marriott, and no shuttle service is available to the USDA Center.

Please check with your travel agent for other hotel availability.

Authority: 7 U.S.C. 2131 *et seq.*

Done in Washington, DC, this 28th day of January 2000.

Bobby R. Acord,

Acting Administrator, Animal and Plant Health Inspection Service.

[FR Doc. 00–2383 Filed 2–2–00; 8:45 am]

BILLING CODE 3410–34–U

DEPARTMENT OF AGRICULTURE

Animal and Plant Health Inspection Service

[Docket No. 99–068–1]

Draft Guideline on Stability Testing of Biotechnological/Biological Veterinary Medicinal Products, VICH Topic GL17

AGENCY: Animal and Plant Health Inspection Service, USDA.

ACTION: Notice of availability and request for comments.

SUMMARY: A draft guideline titled ''Stability Testing of Biotechnological/Biological Veterinary Medicinal Products'' has been developed by the International Cooperation on Harmonization of Technical Requirements for Registration of Veterinary Medicinal Products (VICH). The guideline contains proposed international standards for the generation and submission of stability data for products such as cytokines (interferons, interleukins, colony-stimulating factors, tumor necrosis factors), monoclonal antibodies, and vaccines consisting of well-characterized proteins or polypeptides, including some conventional vaccines. Because the draft guidelines pertain to veterinary biological products regulated by the Animal and Plant Health Inspection Service under the Virus-Serum-Toxin Act, we are requesting comments on its provisions so that we may include any relevant public input on the draft in the Agency's comments to the VICH Steering Committee.

DATES: We invite you to comment on the draft guidelines. We will consider all comments that we receive by April 3, 2000.

ADDRESSES: Please send your comment and three copies to: Docket No. 99–068–1, Regulatory Analysis and Development, PPD, APHIS, Suite 3C03, 4700 River Road, Unit 118, Riverdale, MD 20737–1238.

Please state that your comment refers to Docket No. 99–068–1.

You may read any comments that we receive on this docket in our reading room. The reading room is located in room 1141 of the USDA South Building, 14th Street and Independence Avenue, SW., Washington, DC. Normal reading room hours are 8 a.m. to 4:30 p.m., Monday through Friday, except holidays. To be sure someone is there to help you, please call (202) 690–2817 before coming.

APHIS documents published in the **Federal Register**, and related information, including the names of organizations and individuals who have commented on APHIS rules, are available on the Internet at http://www.aphis.usda.gov/ppd/rad/webrepor.html.

You may request a copy of the draft ''Stability Testing of Biotechnological/Biological Veterinary Medicinal Products'' by writing to or calling the person listed under **FOR FURTHER INFORMATION CONTACT.**

FOR FURTHER INFORMATION CONTACT: Dr. Albert P. Morgan, CVB-LPD, VS, APHIS, 4700 River Road Unit 148, Riverdale, MD 20737–1231; phone (301) 734–8245.

SUPPLEMENTARY INFORMATION: The International Cooperation on Harmonization of Technical Requirements for the Registration of Veterinary Medicinal Products (VICH) is a unique project conducted under the auspices of the International Office of Epizootics (OIE, the Office International des Epizooties) that brings together the regulatory authorities of the European Union, Japan, and the United States and representatives from the animal health industry in the three regions. The purpose of VICH is to harmonize technical requirements for veterinary products (both drugs and biologics). Regulatory authorities and industry experts from Australia and New Zealand participate in an observer capacity. The World Federation of the Animal Health Industry (COMISA, the Confederation Mondiale de L'Industrie de la Sante Animale) provides the secretarial and administrative support for VICH activities.

The United States Government is represented in VICH by the Food and Drug Administration (FDA) and the Animal and Plant Health Inspection Service (APHIS). The FDA provides expertise regarding veterinary drugs, while APHIS fills a corresponding role for veterinary biological products. As VICH members, APHIS and FDA participate in efforts to enhance harmonization and have expressed their commitment to seeking scientifically based harmonized technical requirements for the development of veterinary drugs and biological products. One of the goals of harmonization is to identify and reduce the differences in technical requirements for veterinary drugs and biologics among regulatory agencies in different countries.

The draft document that is the subject of this notice, ''Stability Testing of Biotechnological/Biological Veterinary Medicinal Products'' (VICH Topic GL17), has been made available by the VICH Steering Committee for comments by interested parties. The guideline is intended to function as an international standard for the generation and submission of stability data for products such as cytokines (interferons, interleukins, colony-stimulating factors, and tumor necrosis factors), monoclonal antibodies, and vaccines consisting of well-characterized proteins or polypeptides. Because the guideline pertains to some veterinary biological products regulated by APHIS under the Virus-Serum-Toxin Act—particularly with regard to prelicensing stability studies—we are requesting comments on its provisions so that we may include any relevant public input on the draft in the Agency's comments to the VICH Steering Committee.

The draft document pertains to the generation and submission of studies testing the stability of veterinary biological products that consist of well-characterized proteins and polypeptides, their derivatives, and products of which they are components. (The draft guideline refers to such studies as ''stability studies.'') In accordance with the VICH process, once a final draft of ''Stability Testing of Biotechnological/Biological Veterinary Medicinal Products'' has been approved, the guideline will be recommended for adoption by the regulatory bodies of the European Union, Japan, and the United States. As with all VICH documents, the final guideline will not create or confer any rights for or on any person and will not operate to bind APHIS or the public. Further, the VICH guidelines specifically provide for the use of alternative approaches if those approaches satisfy applicable regulatory requirements.

Ultimately, APHIS intends to consider the VICH Steering Committee's final guidance document for use by U.S. veterinary biologics licensees, permittees, and applicants. In addition, APHIS will consider its use as a basis for the approval of stability studies conducted to establish and extend expiration dates for applicable veterinary biological products under 9 CFR 114.13 and 114.14. APHIS may also use the final guidance document as the basis for proposed additions or amendments to its regulations in 9 CFR

chapter I, subchapter E (Viruses, Serums, Toxins, and Analogous Products; Organisms and Vectors). Because we anticipate that applicable provisions of the final version of ''Stability Testing of Biotechnological/Biological Veterinary Medicinal Products'' may be introduced into APHIS' veterinary biologics regulatory program in the future, we encourage your comments on the draft version.

Authority: 21 U.S.C. 151 *et seq.*

Done in Washington, DC, this 28th day of January 2000.

Bobby R. Acord,

Acting Administrator, Animal and Plant Health Inspection Service.

[FR Doc. 00–2379 Filed 2–2–00; 8:45 am]

BILLING CODE 3410–34–U

DEPARTMENT OF AGRICULTURE

Farm Service Agency

National Drought Policy Commission

AGENCY: Farm Service Agency, USDA.

ACTION: Notice of Commission public hearing.

SUMMARY: The National Drought Policy Commission (Commission) shall conduct a thorough study and submit a report to the President and Congress on national drought policy. This notice announces a public hearing to be held on February 17–18, 2000, in Billings, Montana, and seeks comments on issues that the Commission should address and recommendations that the Commission should consider as part of its report. The hearing is open to the public.

DATES: The Commission will conduct a public hearing on February 17, 2000, from 1:00 p.m. to 5:00 p.m. and February 18, 2000, from 9:00 a.m. to 12:00 p.m. at the Lincoln Center, Auditorium, 415 N 30th Street, Billings, Montana. All times are Mountain Standard Time.

Anyone wishing to make an oral presentation to the Commission at the public hearing, must contact the Executive Director, Leona Dittus, in writing (by letter, fax or internet) no later than COB, February 11, 2000, in order to be included on the agenda. Presenters will be approved on a first-come, first-served basis. The request should identify the name and affiliation of the individual who will make the presentation and an outline of the issues to be addressed. Thirty-five copies of any written presentation material shall be given to the Executive Director by all presenters no later than the time of the presentation for distribution to the Commission and the interested public. Those wishing to testify, but who are unable to notify the Commission office by February 11, 2000, will be able to sign up as a presenter the day of the hearing, February 17, 2000, between 12:00 p.m. and 2:00 p.m. and February 18, 2000, between 8:00 a.m. and 10:00 a.m. All times are Mountain Standard Time. These presenters will testify on a first-come, first-served basis and comments will be limited based on the time available and the number of presenters. Written statements will be accepted at the public hearing, or may be mailed or faxed to the Commission office.

Persons with disabilities who require accommodations to attend or participate in this public hearing should contact Leona Dittus, on 202–720–3168, Federal Relay Service at 1–800–877–8339, or Internet: leona.dittus@usda.gov, by COB February 11, 2000.

COMMENTS: The public is invited to respond and/or to submit additional comments, concerns, and issues for consideration by the Commission by March 29, 2000.

ADDRESSES: Comments and statements should be sent to Leona Dittus, Executive Director, National Drought Policy Commission, U.S. Department of Agriculture, 1400 Independence Avenue, SW, Room 6701–S, STOP 0501, Washington, D.C. 20250–0501.

FOR FURTHER INFORMATION CONTACT: Leona Dittus (202) 720–3168; FAX (202) 720–9688; Internet: leona.dittus@usda.gov.

SUPPLEMENTARY INFORMATION: The purpose of the Commission is to provide advice and recommendations to the President and Congress on the creation of an integrated, coordinated Federal policy, designed to prepare for and respond to serious drought emergencies. Tasks for the Commission include developing recommendations that will (a) better integrate Federal laws and programs with ongoing State, local, and tribal programs, (b) improve public awareness of the need for drought mitigation, prevention, and response and (c) determine whether all Federal drought preparation and response programs should be consolidated under one existing Federal agency, and, if so, identify the agency.

Below is a draft vision statement and set of principles to guide the Commission. Draft Vision Statement: Our vision is of a well-informed, involved U. S. citizenry and its governments prepared for and capable of lessening the impacts of drought—consistently and timely—in the new millennium.

This vision is based on the following principles:

Consideration of all affected entities and related issues, including legal, economic, geographic, climate, religious, and cultural differences; fairness and equity; and environmental concerns;

Comprehensive, long-term strategies that emphasize drought planning and measures to reduce the impacts of drought;

Federal role focused on appropriate coordination, technical assistance, education, and incentives while at all times respecting the rights and responsibilities of

Federal, State, and local governments, and tribal sovereignty;

Self-reliance and self-determination;

Lessons learned from past drought experiences;

Shared drought-related expertise and knowledge across international borders.

In addition to your own views and thoughts regarding a national drought policy, as you review the draft vision and guiding principles, the Commission would be interested in your thoughts regarding the following questions:

1. What is the best means for informing the public of Federal assistance for drought planning and mitigation?

2. What type of information do you need for responding to the drought?

3. What needs do you or your organization presently have with respect to addressing drought conditions?

4. What do you see as the Federal role with respect to drought preparedness? Drought response? Should Federal emergency assistance be contingent on advance preparedness?

5. Are there any ways you feel that the Federal Government could better coordinate with State, regional, tribal, and local governments in mitigating or responding to droughts?

6. What lessons have you or your organization learned from past drought experiences that would be beneficial in the creation of a national drought policy?

Signed at Washington, D.C., on January 31, 2000.

George Arredondo,

Acting Administrator, Farm Service Agency.

[FR Doc. 00–2445 Filed 1–1–00; 5:03 pm]

BILLING CODE 3410–05–P

DEPARTMENT OF AGRICULTURE

Forest Service

Environmental Statements; Notice of Intent: Salmon-Challis National Forest, ID

AGENCY: USDA-Forest Service, Intermountain Region, Salmon-Challis National Forest.

ACTION: Notice of Intent to extend the comment period on the Supplemental Draft Environmental Impact Statement (EIS) for the programmatic wilderness plan.

SUMMARY: The Forest Service will extend the comment period for the Supplemental Draft Environmental Impact Statement for the Frank Church—River Of No Return Wilderness management plan for one month. The comment period was set to expire on February 1, 2000. The comment period will be extended to March 1, 2000. The Notice of Intent to prepare a Draft Environmental Impact Statement for Frank-Church River Of No Return Wilderness was published in the **Federal Register** December 7, 1994. The Forest Service prepared a Draft Environmental Impact Statement for the Frank-Church River Of No Return Wilderness and released it for public comment in January 1998. Following a lengthy public comment period the Forest Service prepared a Supplemental Draft Environmental Impact Statement. The supplement was released in September 1999 with a comment period to end February 1, 2000. Because of requests from various interested parties and individuals the Forest Service will extend the comment period until March 1, 2000. Written comments will be used in developing the Final Environmental Impact Statement for the Frank Church—River Of No Return Wilderness management plan.

Written comments concerning this extension or the supplemental analysis described in this Notice should be received by March 1, 2000 to ensure timely consideration. Additional public meetings are not planned at this time.

EFFECTIVE DATE: February 1, 2000.

FOR FURTHER INFORMATION CONTACT: Questions concerning the supplement and the Frank Church-River Of No Return Wilderness management plan should be directed to Ken Wotring, Wilderness Coordinator, Salmon-Challis National Forest, RR 2, Box 600, Salmon, Idaho 83467, telephone 208–756–5100.

SUPPLEMENTARY INFORMATION: The Forest Service is seeking information and comments from the Federal, State, and local agencies, as well as individuals and organizations who may be interested in, or affected by, the proposed action. The Forest Service invites written comments and suggestions on the issues related to the analysis and the area being analyzed. Information received will be used in preparation of the Final EIS. For the most effective use, comments should be submitted to the USDA-Forest Service by March 1, 2000. The Responsible Official is George Matejko, Forest Supervisor, Salmon-Challis National Forest. Reviewers may wish to refer to the Council on Environmental Quality Regulations for implementing the procedural provisions of the National Environmental Policy Act at 40 CFR 1503.3 in preparing their responses. Comments received in response to this solicitation, including names and addresses of those who comment, will be considered part of the public record on this proposed action and will be available for public inspection. Comments submitted anonymously will be accepted and considered, however, those who submit anonymous comments will not have standing to appeal the subsequent decision under 36 CFR 215 or 217. Additionally, pursuant to 7 CFR 1.27(d), any person may request the agency to withhold a submission from the public record by showing how the Freedom of Information Act (FOIA) permits such confidentiality. Persons requesting such confidentiality should be aware that, under the FOIA, confidentiality may be granted in only limited circumstances, such as to protect trade secrets. The Forest Service will inform the requester of the agency's decision regarding the request for confidentiality, and where the request is denied, the agency will return the submission and notify the requester that the comments may be submitted with or without name and address within 10 days.

George Matejko,

Forest Supervisor.

[FR Doc. 00–2317 Filed 2–2–00; 8:45 am]

BILLING CODE 3410–11–M

DEPARTMENT OF AGRICULTURE

Natural Resources Conservation Service

Notice of Proposed Changes to Section IV of the Field Office Technical Guide (FOTG) of the Natural Resources Conservation Service in Indiana

AGENCY: Natural Resources Conservation Service (NRCS), DOA.

ACTION: Notice of availability of proposed changes in Section IV of the FOTG of the NRCS in Indiana for review and comment.

SUMMARY: It is the intention of NRCS in Indiana to issue a new conservation practice standard in Section IV of the FOTG. The new standard is Land Reconstruction of Brine Damaged Areas (Code 773). This practice may be used in conservation systems that treat highly erodible land.

DATES: Comments will be received on or before March 9, 2000.

ADDRESSES: Address all requests and comments to J. Chris Tippie, Acting State Conservationist, Natural Resources Conservation Service (NRCS), 6013 Lakeside Blvd., Indianapolis, Indiana 46278. Copies of this standard will be made available upon written request. You may submit electronic requests and comments to joe.gasperi@in.usda.gov.

FOR FURTHER INFORMATION CONTACT: J. Chris Tippie, 317–290–3200.

SUPPLEMENTARY INFORMATION: Section 343 of the Federal Agriculture Improvement and Reform Act of 1996 states that revisions made after enactment of the law, to NRCS state technical guides used to carry out highly erodible land and wetland provisions of the law, shall be made available for public review and comment. For the next 30 days, the NRCS in Indiana will receive comments relative to the proposed changes. Following that period, a determination will be made by the NRCS in Indiana regarding disposition of those comments and a final determination of changes will be made.

Dated: January 18, 2000.

J. Chris Tippie,

Acting State Conservationist, Indianapolis, Indiana.

[FR Doc. 00–2344 Filed 2–2–00; 8:45 am]

BILLING CODE 3410–16–P

DEPARTMENT OF AGRICULTURE

Rural Telephone Bank, USDA

Staff Briefing for the Board of Directors

TIME AND DATE: 2:00 p.m., Thursday, February 10, 2000.

PLACE: Room 5030, South Building, Department of Agriculture, 1400 Independence Avenue, SW, Washington, DC.

STATUS: Open.

MATTERS TO BE DISCUSSED:

1. Current telecommunications industry issues.

industry issues.

2. Status of PBO planning and recommendations to accelerate privatization of the Bank.

3. Procedure for issuing class C share certificates.

4. Procedure to replace lost share certificates.

5. Administrative issues.

ACTION: Board of Directors Meeting.

TIME AND DATE: 9:00 a.m., Friday, February 11, 2000.

PLACE: Room 104–A, The Williamsburg Room, Department of Agriculture, 12th & Jefferson Drive, SW, Washington, DC.

STATUS: Open.

MATTERS TO BE CONSIDERED: The following matters have been placed on the agenda for the Board of Directors meeting:

1. Call to order.

2. Action on Minutes of the November 9, 1999, board meeting.

3. Report on loans approved in the first quarter of FY 2000.

4. Review first quarter financial statements for FY 2000.

5. Privatization Committee report.

6. Discussion of Privatization Committees' recommendations to:

(a) Contract for a financial advisor to assist the Bank in its preparations for privatization.

(b) Transfer funds to be used for the financial advisor contract from the Bank's Liquidating Account at the U.S. Treasury to a private financial institution.

7. Consideration of resolution to change the procedure for issuing class C share certificates.

8. Consideration of resolution to modify the procedure for replacing lost share certificates.

9. Consideration of resolution to adopt a schedule for various actions concerning the November 2000 Board of Directors election.

10. Consideration of resolution to appoint Tellers for the November 2000 Board of Directors election.

11. Consideration of resolution to approve Kenneth M. Ackerman to serve as the Assistant Treasurer.

12. Adjournment.

CONTACT PERSON FOR MORE INFORMATION: Roberta D. Purcell, Assistant Governor, Rural Telephone Bank, (202) 720–9554.

Dated: January 28, 2000.

Christopher McLean,

Acting Governor, Rural Telephone Bank.

[FR Doc. 00–2451 Filed 2–1–00; 10:30 am]

BILLING CODE 3410–15–P

DEPARTMENT OF COMMERCE

Foreign-Trade Zones Board

[Docket 2–2000]

Foreign-Trade Zone 193–Pinellas County, FL; Application For Foreign-Trade Subzone Status; RP Scherer Corporation (Gelatin Capsules), Pinellas County, FL

An application has been submitted to the Foreign-Trade Zones Board (the Board) by the Pinellas County Board of County Commissioners, grantee of FTZ 193, requesting special-purpose subzone status for the gelatin capsule manufacturing facilities of RP Scherer Corporation (RP Scherer), a subsidiary of Cardinal Health, Inc., located in the St. Petersburg/Clearwater area, Pinellas County, Florida. The application was submitted pursuant to the Foreign-Trade Zones Act, as amended (19 U.S.C. 81a–81u), and the regulations of the Board (15 CFR part 400). It was formally filed on January 20, 2000.

The RP Scherer facilities (42.1 acres) are located at 4 sites in the St. Petersburg/Clearwater area (Pinellas County), Florida: *Site 1* (3 buildings, 348,093 mfg. sq. ft. on 32.2 acres)''—main manufacturing plant, located at 2725 Scherer, St. Petersburg; *Site 2* (1 building, 48,400 mfg. sq. ft. on 2.2 acres,)—manufacturing plant #2 (leased from Danielson, Ltd.), located at 11286 47th Street North, Clearwater; *Site 3* (1 building, 63,000 mfg. sq. ft. on 3.3 acres,)—manufacturing plant #3 (leased from First Group, Inc.), located at 11399 47th Street North, Clearwater, and *Site 4* (23,140 sq. ft.)—warehouse facility (leased from Ft. Lauderdale-Staples, L.L.C.), located at 10990 US 19, Clearwater. The facilities (754 employees) are used for the manufacture of soft gelatin capsules for pharmaceutical, nutritional, cosmetic, and recreational products. RP Scherer encapsulates the products in gelatin capsule form and returns them to client companies for packaging and distribution. The company purchases raw gelatin from abroad. At this time, the company is only requesting to use zone procedures for the encapsulation of pharmaceutical and nutritional products.

FTZ procedures would enable the company to choose the lower duty rate that applies to the finished pharmaceutical and nutritional products (HTSUS headings 3003, 3004, 3006—duty-free), instead of the duty rate that would otherwise apply to foreign gelatin (HTSUS 3503.00.55, duty rate—3.8% + 2.8¢/kg). The application indicates that the savings from zone procedures would help improve the international competitiveness of the RP Scherer plant and of the U.S. pharmaceutical plants that use this service.

In accordance with the Board's regulations, a member of the FTZ Staff has been designated examiner to investigate the application and report to the Board.

Public comment on the application is invited from interested parties. Submissions (original and three copies) shall be addressed to the Board's Executive Secretary at the address below. The closing period for their receipt is April 3, 2000. Rebuttal comments in response to material submitted during the foregoing period may be submitted during the subsequent 15-day period to April 18, 2000.

A copy of the application and the accompanying exhibits will be available for public inspection at each of the following locations:

Office of the Executive Secretary, Foreign-Trade Zones Board, U.S. Department of Commerce, Room 4008, 14th and Pennsylvania Avenue, NW., Washington, D.C. 20230

U.S. Department of Commerce Export Assistance Center, 1130 Cleveland St., Clearwater, Florida 34615

Dated: January 20, 2000.

Dennis Puccinelli,

Acting Executive Secretary.

[FR Doc. 00–2293 Filed 2–2–00; 8:45 am]

BILLING CODE 3510–DS–P

DEPARTMENT OF COMMERCE

International Trade Administration

Notice of Initiation of Five-Year (''Sunset'') Review

AGENCY: Import Administration, International Trade Administration, Department of Commerce.

ACTION: Notice of Initiation of Five-Year (''Sunset'') Review.

SUMMARY: In accordance with section 751(c) of the Tariff Act of 1930, as amended (''the Act''), the Department of Commerce (''the Department'') is automatically initiating a five-year (''sunset'') review of the antidumping duty order listed below. The International Trade Commission (''the Commission'') is publishing concurrently with this notice its notice of *Institution of Five-Year Reviews* covering this same order.

FOR FURTHER INFORMATION CONTACT: Melissa G. Skinner, or Mark D. Young, Office of Policy, Import Administration, International Trade Administration, U.S. Department of Commerce, at (202)

482–1560 or (202) 482–6397, respectively, or Vera Libeau, Office of Investigations, U.S. International Trade Commission, at (202) 205–3176.

SUPPLEMENTARY INFORMATION:

Initiation of Review

In accordance with 19 CFR 351.218 (*see Procedures for Conducting Five-year (''Sunset'') Reviews of Antidumping and Countervailing Duty Orders,* 63 FR 13516 (March 20, 1998)), we are initiating a sunset review of the following antidumping duty order:

DOC case No.	ITC case No.	Country	Product
A–570–836	A–718	China	Glycine.

Statute and Regulations

Pursuant to sections 751(c) and 752 of the Act, an antidumping (''AD'') or countervailing duty (''CVD'') order will be revoked, or the suspended investigation will be terminated, unless revocation or termination would be likely to lead to continuation or recurrence of (1) dumping or a countervailable subsidy, and (2) material injury to the domestic industry.

The Department's procedures for the conduct of sunset reviews are set forth in the *Procedures for Conducting Five-year (''Sunset'') Reviews of Antidumping and Countervailing Duty Orders,* 63 FR 13516 (March 20, 1998) (''*Sunset Regulations*''). Guidance on methodological or analytical issues relevant to the Department's conduct of sunset reviews is set forth in the Department's Policy Bulletin 98:3—*Policies Regarding the Conduct of Five-year (''Sunset'') Reviews of Antidumping and Countervailing Duty Orders; Policy Bulletin,* 63 FR 18871 (April 16, 1998) (''*Sunset Policy Bulletin*'').

Filing Information

As a courtesy, we are making information related to sunset proceedings, including copies of the *Sunset Regulations* and *Sunset Policy Bulletin*, the Department's schedule of sunset reviews, case history information (*e.g.,* previous margins, duty absorption determinations, scope language, import volumes), and service lists, available to the public on the Department's sunset internet website at the following address: ''http://www.ita.doc.gov/import__admin/records/sunset/''.

All submissions in the sunset review must be filed in accordance with the Department's regulations regarding format, translation, service, and certification of documents. These rules can be found at 19 CFR 351.303 (1999). Also, we suggest that parties check the Department's sunset website for any updates to the service list before filing any submissions. The Department will make additions to and/or deletions from the service list provided on the sunset website based on notifications from parties and participation in this review. Specifically, the Department will delete from the service list all parties that do not submit a substantive response to the notice of initiation.

Because deadlines in a sunset review are, in many instances, very short, we urge interested parties to apply for access to proprietary information under administrative protective order (''APO'') immediately following publication in the **Federal Register** of the notice of initiation of the sunset review. The Department's regulations on submission of proprietary information and eligibility to receive access to business proprietary information under APO can be found at 19 CFR 351.304–306 (*see Antidumping and Countervailing Duty Proceedings: Administrative Protective Order Procedures; Procedures for Imposing Sanctions for Violation of a Protective Order,* 63 FR 24391 (May 4, 1998)).

Information Required From Interested Parties

Domestic interested parties (defined in 19 CFR 351.102 (1999)) wishing to participate in the sunset review must respond not later than 15 days after the date of publication in the **Federal Register** of the notice of initiation by filing a notice of intent to participate. The required contents of the notice of intent to participate are set forth in the *Sunset Regulations* at 19 CFR 351.218(d)(1)(ii). In accordance with the *Sunset Regulations,* if we do not receive a notice of intent to participate from at least one domestic interested party by the 15-day deadline, the Department will automatically revoke the order without further review.

If we receive an order-specific notice of intent to participate from a domestic interested party, the *Sunset Regulations* provide that *all parties* wishing to participate in the sunset review must file substantive responses not later than 30 days after the date of publication in the **Federal Register** of the notice of initiation. The required contents of a substantive response, on an order-specific basis, are set forth in the *Sunset Regulations* at 19 CFR 351.218(d)(3). Note that certain information requirements differ for foreign and domestic parties. Also, note that the Department's information requirements are distinct from the International Trade Commission's information requirements. Please consult the *Sunset Regulations* for information regarding the Department's conduct of sunset reviews. [1] Please consult the Department's regulations at 19 CFR Part 351 (1999) for definitions of terms and for other general information concerning antidumping and countervailing duty proceedings at the Department.

This notice of initiation is being published in accordance with section 751(c) of the Act and 19 CFR 351.218(c).

Dated: January 28, 2000.

Holly A. Kuga,

Acting Assistant Secretary for Import Administration.

[FR Doc. 00–2422 Filed 2–2–00; 8:45 am]

BILLING CODE 3510–DS–P

DEPARTMENT OF COMMERCE

International Trade Administration

[A–427–801, A–428–801, A–475–801, A–588–804, A–485–801, A–559–801, A–401–801, A–412–801]

Antifriction Bearings (Other Than Tapered Roller Bearings) and Parts Thereof From France, Germany, Italy, Japan, Romania, Singapore, Sweden, and the United Kingdom; Notice of Extension of Time Limits for Preliminary Results of Antidumping Administrative Reviews

AGENCY: Import Administration, International Trade Administration, Department of Commerce.

ACTION: Notice of extension of time limits for preliminary results of antidumping duty administrative reviews.

EFFECTIVE DATE: February 3, 2000.

FOR FURTHER INFORMATION CONTACT: Richard Rimlinger, AD/CVD

[1] A number of parties commented that these interim-final regulations provided insufficient time for rebuttals to substantive responses to a notice of initiation (*Sunset Regulations,* 19 CFR 351.218(d)(4)). As provided in 19 CFR 351.302(b) (1999), the Department will consider individual requests for extension of that five-day deadline based upon a showing of good cause.

Enforcement, Import Administration, International Trade Administration, U.S. Department of Commerce, 14th Street and Constitution Avenue, N.W., Washington, D.C. 20230; telephone: (202) 482–4477.

The Applicable Statute

Unless otherwise indicated, all citations to the statute are references to the provisions effective January 1, 1995, the effective date of the amendments made to the Tariff Act of 1930 (the Act) by the Uruguay Round Agreements Act.

Extension of Time Limits for Preliminary Results

The Department of Commerce (the Department) has received requests to conduct administrative reviews of the antidumping duty orders on antifriction bearings (other than tapered roller bearings) and parts thereof (AFBs) from France, Germany, Italy, Japan, Romania, Singapore, Sweden, and the United Kingdom. On June 30, 1999, the Department initiated these administrative reviews covering the period May 1, 1998, through April 30, 1999.

Due to the large number of respondents involved in these reviews and the Department's resource constraints, it is not practicable to complete the AFB reviews within the time limits mandated by section 751(a)(3)(A) of the Act. Therefore, the Department is extending the due date for the preliminary results to March 30, 2000. The Department intends to issue the final results of reviews 120 days after the publication of the preliminary results. This extension of the time limit is in accordance with section 751(a)(3)(A) of the Act.

Dated: January 27, 2000.

Laurie Parkhill,

Acting Deputy Assistant Secretary for Import Administration.

[FR Doc. 00–2291 Filed 2–2–00; 8:45 am]

BILLING CODE 3510–DS–P

DEPARTMENT OF COMMERCE

International Trade Administration

[A–583–008]

Certain Circular Welded Carbon Steel Pipes and Tubes From Taiwan; Amended Final Results of Antidumping Duty Administrative Review

AGENCY: Import Administration, International Trade Administration, Department of Commerce.

ACTION: Notice of amended final results of antidumping duty administrative review.

SUMMARY: On December 13, 1999, the Department of Commerce (the Department) published the final results of review of the antidumping duty order on certain circular welded carbon steel pipes and tubes from Taiwan (64 FR 69488). These amended final results cover the period August 1, 1987 through July 31, 1998, and four manufacturers, Yieh Hsing Enterprise Co. Ltd. (Yieh Hsing) and Kao Hsing Chang Iron & Steel Corporation (KHC), Yun Din Steel Co. Ltd. (Yun Din), and Yieh Loong Co. (Yieh Loong).

On December 15, 1999, pursuant to section 351.224 of the Departments's regulations, Yieh Hsing filed an allegation of ministerial errors in the calculation of its final margin. On January 10, 2000, the petitioners filed an allegation of ministerial errors in the calculation of the final margin for KHC. The Department is publishing these amended final results to correct the ministerial errors identified by Yieh Hsing, and one of those alleged by petitioners.

EFFECTIVE DATE: February 3, 2000.

FOR FURTHER INFORMATION CONTACT: Thomas Killiam or Robert James, Import Administration, International Trade Administration, U.S. Department of Commerce, 14th Street and Constitution Avenue, N.W., Washington, D.C. 20230; telephone (202) 482–3019 or 482–0649, respectively.

APPLICABLE STATUTE: Unless otherwise indicated, all citations to the Tariff Act of 1930, as amended (the Act) are references to the provisions effective January 1, 1995, the effective date of the amendments made to the Act by the Uruguay Round Agreements Act (URAA). In addition, unless otherwise indicated, all citations to the Department's regulations are to the regulations, codified at 19 C.F.R. Part 351 (1999).

MINISTERIAL ERRORS IN THE FINAL RESULTS OF REVIEW: In its December 15, 1999 letter, Yieh Hsing alleges that the Department intended to compare U.S. sales to home market sales that occurred in the same month as, in the three months prior to, or in the two months following, the U.S. sale. Yieh Hsing further notes that where comparisons to sales of identical merchandise were not available, the Department intended to make comparisons to sales of the most physically similar home market merchandise.

Yieh Hsing contends that the final results computer program failed to successfully search for sales in months other than the month of the U.S. sale, and failed to search for home market sales of non-identical merchandise. We examined the computer program and agree with Yieh Hsing that these programming failures occurred and that they constitute clerical error within the meaning of 19 CFR 351.244(f). Therefore, for these amended final results, we have corrected the computer program, and have used all contemporaneous sales of identical or similar merchandise in our calculation of normal value.

Petitioners argue that in its calculation of the final margin for KHC, the Department incorrectly performed a foreign exchange conversion on an international freight expense, which had already been reported in U.S. dollars. We reviewed the data and agree that we intended to deduct the expense in question from the price without converting the currency, and for these amended final results, we have removed the incorrect conversion step.

Petitioners also allege that the Department's analysis program failed to effect comparisons of U.S. sales to home market sales with a ''CNS'' grade designation. We disagree that this model-matching methodology is a ministerial error. The Department intended to exclude CNS grades and to compare the U.S. merchandise to other, more similar home market models. *See* model match program at lines 911–918 (included in petitioners' January 10, 2000 allegation at Exhibit 6). Accordingly, we have not changed the product comparison methodology for these final results.

Non-Responding Companies

As stated in prior notices concerning this review, Yun Din and Yieh Loong did not respond to our requests for information and were assigned, as facts available, the highest rate in any segment of this proceeding; that rate changed as a result of these amended final results.

Amended Final Results of Review

As a result of the correction of the ministerial errors discussed above, the margins are:

Manufacturer/exporter	Period	Margin (%)
Yieh Hsing	5/1/97–4/30/98	1.35
KHC	5/1/97–4/30/98	24.80
Yun Din Steel Co. Ltd.	5/1/97–4/30/98	24.80
Yieh Loong Co.	5/1/97–4/30/98	24.80

The Department shall determine, and the Customs Service shall assess, antidumping duties on all appropriate entries. We also will direct Customs Service to collect cash deposits of estimated antidumping duties on all appropriate entries in accordance with the procedures discussed in the final results of review and as amended by this determination. The amended deposit requirements are effective for all shipments of the subject merchandise entered, or withdrawn from warehouse, for consumption on or after the date of publication of this notice and shall remain in effect until publication of the final results of the next administrative review.

We are issuing and publishing this determination and notice in accordance with sections 751(h) and 777(i)(1) of the Act, and 19 CFR 351.224(e).

Dated: January 19, 2000.

Robert S. LaRussa,

Assistant Secretary for Import Administration.

[FR Doc. 00–2292 Filed 2–2–00; 8:45 am]

BILLING CODE 3510–DS–P

DEPARTMENT OF COMMERCE

International Trade Administration

[A–201–504]

Porcelain-on-Steel Cookware From Mexico: Notice of Extension of Time Limit for Antidumping Duty Administrative Review

AGENCY: Import Administration, International Trade Administration, United States Department of Commerce.

EFFECTIVE DATE: February 3, 2000.

FOR FURTHER INFORMATION CONTACT: Kate Johnson at (202) 482–4929, or David Goldberger at (202) 482–4136, Office of AD/CVD Enforcement, Import Administration, International Trade Administration, U.S. Department of Commerce, 14th Street and Constitution Avenue, N.W., Washington, D.C., 20230.

POSTPONEMENT OF FINAL RESULTS OF ADMINISTRATIVE REVIEW: The Department of Commerce (''the Department'') published the preliminary results of the twelfth administrative review of the antidumping duty order on Porcelain-on-Steel Cookware from Mexico on November 5, 1999 (64 FR 60417). The current deadline for the final results in this review is March 6, 2000. In accordance with section 751(a)(3)(A) of the Tariff Act of 1930 (''the Act''), as amended, the Department finds that it is not practicable to complete this administrative review within the original time frame due to the complex nature of certain issues in this review which require further consideration. Thus, the Department is extending the time limit for completion of the final results until May 3, 2000, which is 180 days after the date on which notice of the preliminary results was published in the **Federal Register**.

Dated: January 27, 2000.

Susan Kuhbach,

Acting Deputy Assistant Secretary for Import Administration.

[FR Doc. 00–2416 Filed 2–2–00; 8:45 am]

BILLING CODE 3510–DS–P

DEPARTMENT OF COMMERCE

International Trade Administration

[A–357–804]

Silicon Metal From Argentina: Final Results of Antidumping Duty Administrative Review

AGENCY: Import Administration, International Trade Administration, Department of Commerce.

ACTION: Notice of final results of antidumping duty administrative review.

SUMMARY: On October 12, 1999, the Department of Commerce published the preliminary results of the administrative review of the antidumping duty order on silicon metal from Argentina. We preliminarily determined that sales of the subject merchandise were not made below normal value. This review covers one producer/exporter, Electrometalurgica Andina S.A.I.C. (''Andina'') and the period September 1, 1997 through August 31, 1998.

We gave interested parties an opportunity to comment on the preliminary results. No comments were received. Therefore, we have made no changes for the final results. We have determined that Andina has not made sales below normal value during the period of review. Accordingly, we will instruct the U.S. Customs Service not to assess antidumping duties on entries subject to this review.

EFFECTIVE DATE: February 3, 2000.

FOR FURTHER INFORMATION CONTACT: Helen M. Kramer or Linda Ludwig, Import Administration, International Trade Administration, U.S. Department of Commerce, 14th Street and Constitution Avenue, N.W., Washington, D.C. 20230; telephone (202) 482–0405 or 482–3833, respectively.

APPLICABLE STATUTE AND REGULATIONS: Unless otherwise indicated, all citations to the Trade and Tariff Act of 1930, as amended (the Act) are references to the provisions effective January 1, 1995, the effective date of the amendments made to the Act by the Uruguay Round Agreements Act of 1994 (URAA). In addition, unless otherwise indicated, all references to the Department's regulations are to 19 CFR Part 351 (1998).

SUPPLEMENTARY INFORMATION:

Background

On September 26, 1991, the Department published an antidumping duty order on silicon metal from Argentina (56 FR 48779), which was amended on July 10, 1995, pursuant to court remand (60 FR 35551). The Department published a notice of ''Opportunity To Request Administrative Review'' of the antidumping duty order for the 1997/1998 review period on September 11, 1998 (63 FR 49543). On September 30, 1998, the respondent, Electrometalurgica Andina S.A.I.C. (''Andina'') filed a request for review. We published a notice of initiation of this review on October 29, 1998 (63 FR 58009). This review covers the period of September 1, 1997 through August 31, 1998. On October 30, 1998, the Department sent an antidumping questionnaire to Andina. The Department received questionnaire responses in November and December 1998, and responses to the Department's supplemental questionnaires in January and February 1999.

Due to the complexity of issues involved in this case, the Department extended the time limit for completion

of the preliminary results until September 30, 1999, in accordance with section 751(a)(3)(A) of the Act. On October 12, 1999, the preliminary results were published. See 64 FR 55249. The Department has now completed this review in accordance with section 751(a) of the Act. We made no changes in the calculation methodology from the preliminary results.

Scope of the Review

The product covered by this review is silicon metal. During the less-than-fair-value (LTFV) investigation, silicon metal was described as containing at least 96.00 percent, but less than 99.99 percent, silicon by weight. In response to a request by the petitioners for clarification of the scope of the antidumping duty order on silicon metal from the People's Republic of China, the Department determined that material with a higher aluminum content containing between 89 and 96 percent silicon by weight is the same class or kind of merchandise as silicon metal described in the LTFV investigation. See Final Scope Rulings—Antidumping Duty Orders on Silicon Metal From the People's Republic of China, Brazil and Argentina (February 3, 1993). Therefore, such material is within the scope of the orders on silicon metal from the PRC, Brazil and Argentina. Silicon metal is currently provided for under subheadings 2804.69.10 and 2804.69.50 of the Harmonized Tariff Schedule (HTS) and is commonly referred to as a metal. Semiconductor-grade silicon (silicon metal containing by weight not less than 99.99 percent of silicon and provided for in subheading 2804.61.00 of the HTS) is not subject to this review. These HTS subheadings are provided for convenience and U.S. Customs purposes. Our written description of the scope of the proceeding is dispositive.

Verification

As provided in section 782(i)(3) of the Act, we verified sales and cost information provided by Andina at its headquarters in Buenos Aires and at its plant in San Juan, Argentina from May 17 through 28, 1999, using standard verification procedures, including inspection of the manufacturing facilities, examination of relevant sales and financial records, and selection of original documentation containing relevant information. As a result of our findings at verification, we adjusted the costs of wood chips and electricity. See ''Verification of Cost at Electrometalurgica Andina S.A.I.C., San Juan and Buenos Aires, Argentina, May 17–21, 1999,'' dated August 6, 1999, ''Verification of Sales at Electrometalurgica Andina S.A.I.C., San Juan and Buenos Aires, Argentina, May 24–28, 1999,'' dated August 6, 1999, and ''Analysis of Electrometalurgica Andina S.A.I.C. for the Preliminary Results of the Administrative Review of Silicon Metal from Argentina for the Period September 1, 1997 through August 31, 1998,'' dated September 10, 1999, on file in the Central Records Unit, Room B–099 of the Department.

Final Results of the Review

As a result of this review, we have determined that the following margin exists for the period September 1, 1997 through August 31, 1998:

Manufacturer/exporter	Period	Margin (percent)
Electrometalurgica Andina S.A.I.C.	9/1/97–8/31/98	0.00

In accordance with 19 CFR 351.106(c)(2), the Department will instruct the Customs Service to liquidate without regard to antidumping duties all entries of the subject merchandise during the POR for which the importer-specific assessment rate is zero or *de minimis* (*i.e.,* less than 0.50 percent).

Further, the following deposit requirements shall be effective for all shipments of the subject merchandise from Argentina that are entered, or withdrawn from warehouse, for consumption on or after the publication date of the final results of this administrative review, as provided for by section 751(a)(1) of the Act: (1) The cash deposit rate for Andina will be the rate established above in the ''Final Results of Review'' section; (2) for previously investigated companies not listed above, the cash deposit rate will continue to be the company-specific rate published for the most recent period; (3) if the exporter is not a firm covered in this review, or the original investigation, but the manufacturer is, the cash deposit rate will be the rate established for the most recent period for the manufacturer of the merchandise; and (4) the cash deposit rate for all other manufacturers or exporters of this merchandise will continue to be 17.87 percent, the all others rate established in the amended final determination of the LTFV investigation. *See Notice of Amendment to Final Determination and Antidumping Duty Order: Silicon Metal From Argentina,* 60 FR 35551 (July 10, 1995). The deposit requirements, when imposed, shall remain in effect until publication of the final results of the next administrative review.

This notice serves as a final reminder to importers of their responsibility under 19 CFR 351.402(f) to file a certificate regarding the reimbursement of antidumping duties prior to liquidation of the relevant entries during this review period. Failure to comply with this requirement could result in the Secretary's presumption that reimbursement of antidumping duties occurred and the subsequent assessment of double antidumping duties.

This notice serves as the only reminder to parties subject to administrative protective order (APO) of their responsibility concerning the disposition of proprietary information disclosed under APO in accordance with 19 CFR 353.34(d). Timely written notification of return/destruction of APO materials or conversion to judicial protective order is hereby requested. Failure to comply with the regulation and the terms of an APO is a sanctionable violation.

This administrative review and notice are in accordance with sections 751(a)(1) and 777(i)(1) of the Act and 19 CFR 351.221.

Dated: January 24, 2000.

Robert S. LaRussa,

Assistant Secretary for Import Administration.

[FR Doc. 00–2417 Filed 2–2–00; 8:45 am]

BILLING CODE 3510–DS–P

DEPARTMENT OF COMMERCE

International Trade Administration

[A–570–804]

Final Results of Expedited Sunset Review: Sparklers From the People's Republic of China

AGENCY: Import Administration, International Trade Administration, U.S. Department of Commerce.

ACTION: Notice of final results of expedited sunset review: Sparklers from the People's Republic of China.

SUMMARY: On July 1, 1999, the Department of Commerce (''the Department'') initiated a sunset review of the antidumping duty order on sparklers from the People's Republic of China (64 FR 35588) pursuant to section 751(c) of the Tariff Act of 1930, as amended (''the Act''). On the basis of a notice of intent to participate and adequate substantive response filed on behalf of a domestic interested party, and inadequate response (in this case, no response) from respondent interested parties, the Department determined to conduct an expedited sunset review. As a result of this review, the Department finds that revocation of the antidumping duty order would be likely to lead to continuation or recurrence of dumping at the levels indicated in the *Final Results of Review* section of this notice.

EFFECTIVE DATE: February 3, 2000.

FOR FURTHER INFORMATION CONTACT: Martha V. Douthit or Melissa G. Skinner, Office of Policy for Import Administration, International Trade Administration, U.S. Department of Commerce, 14th St. & Constitution Ave., NW, Washington, D.C. 20230; telephone (202) 482–5050 or (202) 482–1560, respectively.

SUPPLEMENTARY INFORMATION:

Statute and Regulations

This review was conducted pursuant to sections 751(c) and 752 of the Act. The Department's procedures for the conduct of sunset reviews are set forth in *Procedures for Conducting Five-year (''Sunset'') Reviews of Antidumping and Countervailing Duty Orders,* 63 FR 13516 (March 20, 1998) (''*Sunset Regulations*'') and in 19 CFR Part 351 (1999) in general. Guidance on methodological or analytical issues relevant to the Department's conduct of sunset reviews is set forth in the Department's Policy Bulletin 98:3—*Policies Regarding the Conduct of Five-year (''Sunset'') Reviews of Antidumping and Countervailing Duty Orders; Policy Bulletin,* 63 FR 18871 (April 16, 1998) (''*Sunset Policy Bulletin*'').

Scope

The products covered by this order are sparklers from the People's Republic of China (''PRC''). Sparklers are fireworks each comprising a cut-to-length wire, one end of which is coated with a chemical mix that emits bright sparks while burning. Sparklers are currently classified under Harmonized Tariff Schedule (''HTS'') of the United States subheading 3604.10.00. The HTS subheading is provided for convenience and customs purposes. The written description remains dispositive.

The Department determined that Fritz Companies, Inc.'s 14 inch Morning Glory's are outside the scope of the order. *See Notice of Scope Rulings*, 60 FR 36782 (July 18, 1995).

History of the Order

On May 6, 1991, the Department issued a final determination of sales at less than fair value on imports of sparklers from the PRC (56 FR 20588). In the final determination of sales at less than fair value the Department assigned the following dumping margins: Gaungxi Native Produce Import & Export Corporation (''Gaungxi'')—1.64 percent, Hunan Provincial F&F Import & Export (Holding) Corporation (''Hunan'')—93.54 percent, and Jiangxi Native Produce Import & Export Corporation (''Jiangxi'')—65.78 percent, and ''all others''—75.88 percent. The antidumping duty order on the subject merchandise was published in the **Federal Register** (56 FR 27946) on June 18, 1991. On July 29, 1993, the Department published the amendment to the final determination of sales at less than fair value and antidumping duty order in accordance with decision upon remand, in which the Department adjusted the margins for Guangxi—41.75 percent, Jiangxi—93.54 percent, and all others—93.54 percent (58 FR 40624).

There have been three administrative reviews of this order [1] and no investigations of duty absorption. The antidumping duty order remains in effect for all producers and exporters of sparklers from the PRC.

Background

On July 1, 1999, the Department initiated a sunset review of the antidumping duty order on sparklers from the PRC pursuant to section 751(c) of the Act (64 FR 35588). On July 13, 1999 we received a Notice of Intent to Participate on behalf of Diamond Sparklers Company (''Diamond'') within the deadline specified in section 351.218(d)(1)(i) of the *Sunset Regulations*. We received a complete substantive response from Diamond on July 30, 1999, within the deadline specified in section 351.218(d)(3)(i) of the *Sunset Regulations*. Diamond claimed interested party status under section 771(9)(C) of the Act as a U.S. producer of a domestic like product. Diamond was a petitioner in the original investigation. We did not receive any response from respondent interested parties in this review. As a result, and in accordance with our regulations (19 CFR § 351.218(e)(1)(ii)(C)(2)) we determined to conduct an expedited sunset review of this order.

In accordance with section 751(c)(5)(C)(v) of the Act, the Department may treat a review as extraordinarily complicated if it is a review of a transition order (*i.e.* an order in effect on January 1, 1995). Therefore, on November 16, 1999, the Department determined that the sunset review of the antidumping duty order on sparklers from the PRC is extraordinarily complicated and extended the time limit for completion of the final results of this review until not later than January 27, 2000, in accordance with section 751(c)(5)(B) of the Act (*see* 64 FR 62167).

Determination

In accordance with section 751(c)(1) of the Act, the Department conducted this review to determine whether revocation of the antidumping order would be likely to lead to continuation or recurrence of dumping. Section 752(c)(1) of the Act provides that, in making this determination, the Department shall consider the weighted-average dumping margins determined in the investigation and subsequent reviews and the volume of imports of the subject merchandise for the period before and the period after the issuance of the antidumping order. Pursuant to section 752(c)(3) of the Act, the Department shall provide to the International Trade Commission (''the Commission'') the magnitude of the margin of dumping likely to prevail if the order is revoked.

The Department's determinations concerning continuation or recurrence of dumping and magnitude of the margin are discussed below. In addition, Diamond's comments with respect to the continuation or recurrence of dumping and the magnitude of the margin are addressed within the respective sections below.

Continuation or Recurrence of Dumping

Drawing on the guidance provided in the legislative history accompanying the Uruguay Round Agreements Act (''URAA''), specifically the Statement of Administrative Action (''the SAA''),

[1] *See Sparklers from the People's Republic of China; Final Results of Antidumping Duty Administrative Review*, 60 FR 16605 (March 31, 1995), *Sparklers from the People's Republic of China; Final Results of Antidumping Duty Administrative Review*, 60 FR 54335 (October 23, 1995), and *Sparklers from the People's Republic of China; Final Results of Antidumping Duty Administrative Review*, 61 FR 39630 (July 30, 1996).

H.R. Doc. No. 103–316, vol. 1 (1994), the House Report, H.R. Rep. No. 103–826, pt. 1 (1994), and the Senate Report, S. Rep. No. 103–412 (1994), the Department issued its *Sunset Policy Bulletin* providing guidance on methodological and analytical issues, including the basis for likelihood determinations. The Department clarified that determinations of likelihood will be made on an order-wide basis. *See* section II.A.2 of the *Sunset Policy Bulletin* (April 16, 1998 (63 FR 18871). Additionally, the Department normally will determine that revocation of an antidumping order is likely to lead to continuation or recurrence of dumping where (a) dumping continued at any level above *de minimis* after the issuance of the order, (b) imports of the subject merchandise ceased after the issuance of the order, or (c) dumping was eliminated after the issuance of the order and import volumes for the subject merchandise declined significantly (*see* section II.A.3 of the *Sunset Policy Bulletin*).

In addition to considering the guidance on likelihood cited above, section 751(c)(4)(B) of the Act provides that the Department shall determine that revocation of an order is likely to lead to continuation or recurrence of dumping where a respondent interested party waives its participation in the sunset review. In the instant review, the Department did not receive a response from any respondent interested party. Pursuant to section 351.218(d)(2)(iii) of the *Sunset Regulations*, this constitutes a waiver of participation.

With respect to whether dumping continued at any level above *de minimis* after the issuance of the order, Diamond argues that over the history of this order the Department has imposed a 93.54 percent dumping margin on all sparklers from the PRC. Dumping continued after the issuance of the order, and continues to the present day. Diamond therefore argues that under the Department's own standard, this order cannot be revoked. Citing to the Department's *Sunset Policy Bulletin*, Diamond maintains that if companies continue to dump with the discipline of an order in place, it is reasonable to assume that dumping would continue if the discipline were removed.

With respect to import volumes of the subject merchandise, Diamond states that sparklers enter the U.S. under a single tariff code with other fireworks and, therefore, statistical data on sparklers alone is not available. However, Diamond provided data from the ITC's final determination (based on questionnaire responses) that illustrate a substantial increase of imports prior to the antidumping duty order. *See* Diamond's July 30, 1999, Substantive Response at 5.

Finally, Diamond concludes that because a dumping margin of 93.54 percent continues to exist, import volumes are increasing, and exporters and producers of the subject merchandise continue to undersell the subject merchandise in the United States, the Department should determine that there is likelihood of the continuation of dumping of sparklers from the PRC if the order were revoked. *See* Diamond's July 30, 1999, Substantive Response at 5).

As discussed in section II.A.3 of the *Sunset Policy Bulletin*, the SAA at 890, and the House Report at 63–64, existence of dumping margins after the order is issued is highly probative of the likelihood of continuation or recurrence of dumping. If companies continue to dump with the discipline of an order in place, the Department may reasonably infer that dumping would continue if the discipline of the order were revoked. After examining published findings with respect to the weighted-average dumping margins in previous administrative reviews,[2] we determined that Chinese manufacturers/exporters continued to dump the subject merchandise after the issuance of the order.

Based on information available from Customs in its annual reports to Congress on the administration of the antidumping and countervailing duty statutes (available on the Department's sunset web site) annual import values have fluctuated between fiscal years 1993 and 1998.

We agree with Diamond that dumping above *de minimis* rates continued to exist in this case. Given that dumping above *de minimis* continued, respondent interested parties waived their right to participate in the instant review, and absent argument and evidence to the contrary, the Department determines that dumping would likely continue or recur if the order on sparklers from the PRC were revoked.

Magnitude of the Margin

In the *Sunset Policy Bulletin*, the Department stated that, consistent with the SAA and House Report, the Department will provide to the Commission the company-specific margin from the investigation because that is the only calculated rate that reflects the behavior of exporters without the discipline of an order. Further, for companies not specifically investigated, or for companies that did not begin shipping until after the order was issued, the Department normally will provide a margin based on the ''all others'' rate from the investigation. (*See* section II.B.1 of the *Sunset Policy Bulletin*.) Exceptions to this policy include the use of a more recently calculated margin, where appropriate, and consideration of duty absorption determinations. (*See* sections II.B.2 and 3 of the *Sunset Policy Bulletin*.)

With respect to the magnitude of the margin likely to prevail if the order were revoked, Diamond urges the Department to reject the margins from the original investigation, and to select instead 93.54 percent the dumping margin from the administrative reviews. Diamond bases its argument on the respondents' failure to either request or participate in administrative reviews since the issuance of the order.

As noted above, consistent with the SAA and House Report, the Department normally will provide to the Commission the company-specific margin from the investigation because that is the only calculated rate that reflects the behavior of exporters without the discipline of an order. Further, we stated in the *Sunset Policy Bulletin* that where a company chooses to increase dumping in order to maintain or increase market share, an increasing margin may be more representative of a company's behavior in the absence of the order. In this case, however, Diamond has merely asserted that a more recent rate is appropriate based on respondents failure to request or participate in an administrative review. Therefore, we disagree with Diamond on selecting 93.54 percent for all producers and exporters as the margin likely to continue if the order is revoked.

Rather, consistent with the *Sunset Policy Bulletin* we find that the margins from the original investigation are probative of the behavior of exporters of sparklers without the discipline of the order and we will report to the Commission the margins contained in the Final Results of Review section of this notice.

Final Results of Review

As a result of this review, the Department finds that revocation of the antidumping order would be likely to lead to continuation or recurrence of dumping at the levels indicated below.

[2] See Footnote 1. In each administrative reviews the Department found dumping margins of 93.54 percent.

Manufacturer/exporter	Margin (percent)
Gaungxi Native Produce Import & Export Corporation, Behai Fireworks and Firecrackers Branch	41.75
Hunan Provincial Firecrackers & Fireworks Import & Export (Holding) Corporation	93.54
Jiangxi Native Produce Import & Export Corporation Guangzhou Fireworks Company	93.54
All others	93.54

This notice serves as the only reminder to parties subject to administrative protective order (''APO'') of their responsibility concerning the disposition of proprietary information disclosed under APO in accordance with 19 CFR 351.305 of the Department's regulations. Timely notification of return/destruction of APO materials or conversion to judicial protective order is hereby requested. Failure to comply with the regulations and the terms of an APO is a sanctionable violation.

This five-year (''sunset'') review and notice are in accordance with sections 751(c), 752, and 777(i)(1) of the Act.

Dated: January 27, 2000.

Holly Kuga,

Acting Assistant Secretary for Import Administration.

[FR Doc. 00–2294 Filed 2–2–00; 8:45 am]

BILLING CODE 3510–DS–P

DEPARTMENT OF COMMERCE

International Trade Administration

[A–533–808]

Final Results of Expedited Sunset Review: Stainless Steel Wire Rods From India

AGENCY: Import Administration, International Trade Administration, Department of Commerce.

ACTION: Notice of final results of expedited sunset review: Stainless steel wire rods from India.

SUMMARY: On July 1, 1999, the Department of Commerce (the ''Department'') initiated a sunset review of the antidumping duty order on stainless steel wire rods from India (64 FR 35588) pursuant to section 751(c) of the Tariff Act of 1930, as amended (the ''Act''). On the basis of a notice of intent to participate and adequate substantive response filed on behalf of domestic interested parties and inadequate response (in this case, no response) from respondent interested parties, the Department determined to conduct an expedited sunset review. As a result of this review, the Department finds that revocation of the antidumping duty order would be likely to lead to continuation or recurrence of dumping at the levels indicated in the Final Result of Review section of this notice.

FOR FURTHER INFORMATION CONTACT: Eun W. Cho or Melissa G. Skinner, Office of Policy for Import Administration, International Trade Administration, U.S. Department of Commerce, 14th Street and Constitution Avenue, NW., Washington, DC 20230; telephone: (202) 482–1698 or (202) 482–1560, respectively.

EFFECTIVE DATE: February 3, 2000.

Statute and Regulations

This review was conducted pursuant to sections 751(c) and 752 of the Act. The Department's procedures for the conduct of sunset reviews are set forth in Procedures for Conducting Five-year (''Sunset'') Reviews of Antidumping and Countervailing Duty Orders, 63 FR 13516 (March 20, 1998) (''Sunset Regulations'') and in 19 CFR Part 351 (1999) in general. Guidance on methodological or analytical issues relevant to the Department's conduct of sunset reviews is set forth in the Department's Policy Bulletin 98:3—Policies Regarding the Conduct of Five-year (''Sunset'') Reviews of Antidumping and Countervailing Duty Orders; Policy Bulletin, 63 FR 18871 (April 16, 1998) (''Sunset Policy Bulletin'').

Scope

Imports covered by this order are shipments of stainless steel wire rods (''SSWR'') from India. SSWR are products which are hot-rolled or hot-rolled annealed and/or pickled rounds, squares, octagons, hexagons or other shapes, in coils. SSWR are made of alloy steels containing, by weight, 1.2 percent or less of carbon and 10.5 percent or more of chromium, with or without other elements. These products are only manufactured by hot-rolling and are normally sold in coiled form, and are of solid cross-section. The majority of SSWR sold in the United States are round in cross-section shape, annealed and pickled. The most common size is 5.5 millimeters in diameter. The SSWR subject to this review are currently classifiable under subheadings 7221.00.0005, 7221.00.0015, 7221.00.0020, 7221.00.0030, 7221.00.0040, 7221.00.0045, 7221.00.0060, 7221.00.0075, and 7221.00.0080 of the Harmonized Tariff Schedule of the United States (''HTSUS'').

The HTSUS item numbers are provided for convenience and customs purposes only. The written product description of the scope of this order remains dispositive.

History of the Order

The antidumping duty order on SSWR from India was published in the **Federal Register** on December 1, 1993 (58 FR 63335). In that order, the Department determined that the weighted-average dumping margins for Mukand Ltd.(''Mukand''), Sunstar Metals Ltd. (''Sunstar''), Grand Foundry, Ltd. (''Grand Foundry''), and all others were 48.80 percent.[1] Since that time, the Department has completed one administrative review and two new shipper reviews.[2] We note that the Department has not conducted any duty-absorption investigation with respect to the subject merchandise. The order remains in effect for all manufacturers and exporters of the subject merchandise.

Background

On July 1, 1999, the Department initiated a sunset review of the antidumping duty order on SSWR from India (64 FR 35588) pursuant to section 751(c) of the Act. The Department received a joint Notice of Intent to Participate on behalf of AL Tech Specialty Steel Corp., Carpenter Technology Corp., Republic Engineered Steels, Inc., Talley Metals Technology, Inc., and the United Steelworkers of America, AFL–CIO/CLC (hereinafter referred to as ''domestic interested parties'') on July 16, 1999, within the deadline specified in section 351.218(d)(1)(i) of the Sunset Regulations. In their Notice of Intent to Participate, the domestic interested parties note that they are not related to foreign producers/exporters or to domestic importers of the subject merchandise, nor are they importers of the subject merchandise within the meaning of section 771(4)(B) of the Act.

We received a complete substantive response from the domestic interested parties on August 2, 1999, within the 30-day deadline specified in section 351.218(d)(3)(i) of the Sunset Regulations. The domestic interested

[1] See Antidumping Duty Order: Certain Stainless Steel Wire Rods from India, 58 FR 63335 (December 1, 1993).

[2] See Certain Stainless Steel Wire Rod From India; Final Results of New Shipper Antidumping Duty Administrative Review, 62 FR 38976 (July 21, 1997); and Certain Stainless Steel Wire Rod from India; Final Results of Antidumping Duty Administrative and New Shipper Reviews, 64 FR 856 (January 6, 1999).

parties claim interested party status under sections 771(9)(C) and 771(9)(D) of the Act as producers/manufacturers of a domestic like product and as a union representing workers engaged in the production of the like product in the United States, respectively. The domestic interested parties note that each of the domestic interested parties has been involved in these proceedings since the investigation and that, as a group, they are willing to participate fully in the instant review.

We did not receive a substantive response from any respondent interested party to this proceeding. Consequently, pursuant to section 351.218(e)(1)(ii)(C) of the Sunset Regulations, we determined to conduct an expedited, 120-day, review of this order.

In accordance with section 751(c)(5)(C)(v) of the Act, the Department may treat a review as extraordinarily complicated if it is a review of a transition order (*i.e.*, an order in effect on January 1, 1995). Therefore, on November 16, 1999, the Department determined that the sunset review of the antidumping duty order on SSWR from India is extraordinarily complicated and extended the time limit for completion of the final results of this review until not later than January 27, 2000, in accordance with section 751(c)(5)(B) of the Act.[3]

Determination

In accordance with section 751(c)(1) of the Act, the Department conducted this review to determine whether revocation of the antidumping order would be likely to lead to continuation or recurrence of dumping. Section 752(c) of the Act provides that, in making this determination, the Department shall consider the weighted-average dumping margins determined in the investigation and subsequent reviews and the volume of imports of the subject merchandise for the period before and the period after the issuance of the antidumping order, and shall provide to the International Trade Commission (''the Commission'') the magnitude of the margin of dumping likely to prevail if the order is revoked.

The Department's determinations concerning continuation or recurrence of dumping and the magnitude of the margin are discussed below. In addition, the comments of the domestic interested parties, with respect to continuation or recurrence of dumping and the magnitude of the margin, are addressed within the respective sections below.

Continuation or Recurrence of Dumping

Drawing on the guidance provided in the legislative history accompanying the Uruguay Round Agreements Act (''URAA''), specifically the Statement of Administrative Action (''the SAA''), H.R. Doc. No. 103–316, vol. 1 (1994), the House Report, H.R. Rep. No. 103–826, pt.1 (1994), and the Senate Report, S. Rep. No. 103–412 (1994), the Department issued its *Sunset Policy Bulletin* providing guidance on methodological and analytical issues, including the bases for likelihood determinations. In its *Sunset Policy Bulletin,* the Department indicated that determinations of likelihood will be made on an order-wide basis (*see* section II.A.2). In addition, the Department indicated that normally it will determine that revocation of an antidumping order is likely to lead to continuation or recurrence of dumping where (a) dumping continued at any level above *de minimis* after the issuance of the order, (b) imports of the subject merchandise ceased after the issuance of the order, or (c) dumping was eliminated after the issuance of the order and import volumes for the subject merchandise declined significantly (*see* section II.A.3).

In addition to considering the guidance on likelihood cited above, section 751(c)(4)(B) of the Act provides that the Department shall determine that revocation of an order is likely to lead to continuation or recurrence of dumping where a respondent interested party waives its participation in the sunset review. In the instant review, the Department did not receive a response from any respondent interested party. Pursuant to section 351.218(d)(2)(iii) of the *Sunset Regulations,* this constitutes a waiver of participation.

The domestic interested parties argue that the sales of the subject merchandise at less-than-fair value would continue or resume if the antidumping order on SSWR from India is revoked. In support of their argument, the domestic interested parties compare the import volumes of the subject merchandise for the period before and the period after the issuance of the order. The domestic interested parties note that the import volumes of the subject merchandise declined substantially after the discipline of the order was put into effect. Specifically, the domestic interested parties indicate that, during the three-year period (1990–1992) prior to the initiation of the investigation, the average import volume of the subject merchandise was 4.12 million pounds annually; whereas, during the three-year period (1994–1996) following the imposition of the order, the average annual import volume of the subject merchandise declined to 49,259 pounds—a 98.8 percent decline. (*See* August 2, 1999, substantive response of the domestic interested parties at 14–17 and 20–21.)

Although the domestic interested parties acknowledge that the Department determined that, in its new shipper review, Isibars, Viraj, and Panchmahal, and, in its administrative review, Mukand was not dumping during the respective review period,[4] the domestic interested parties urge that the Department should consider those zero dumping margins in conjunction with the fact that imports of the subject merchandise declined substantially since the issuance of the order. *Id.*

In conclusion, the domestic interested parties contend that, since Indian manufacturers/exporters have not been able to export SSWR to the Unites States with the discipline of the order in place, the Department should determine that Indian manufacturers/exporters cannot sell the subject merchandise without dumping; *i.e.,* dumping of the subject merchandise would be likely to resume or continue were the order revoked. *Id.*

The domestic interested parties' argument concerning the import volumes of the subject merchandise is supported by the data in the Commission's Interactive Tariff and Trade Data Web. In the year preceding the initiation of the investigation, 1992, the import volume of the subject merchandise was 3,941 metric tons. In the year following the order, 1994, the import volume fell to 19 metric tons—a decline of more than 99 percent. From 1994 to 1998, the average import volume of the subject merchandise was about 64 metric tons, which is less than 1 percent of the pre-order volume. Therefore, we determine that import of the subject merchandise declined substantially after the issuance of the order.

As indicated in section II.A.3 of the *Sunset Policy Bulletin* reflecting the SAA at 889–890, Senate Report at 52, and the House Report at 63–64, the Department considers whether dumping continued at any level above *de minimis*

[3] See Extension of Time Limit for Final Results of Five-Year Reviews, 64 FR 62167 (November 16, 1999).

[4] *See* footnote 2, *supra.* The Department determined in its new shipper reviews that Isibars Limited (''Isibars''), Viraj Group (''Viraj''), and Panchmahal Steel Ltd. (''Panchmahal'') have not sold the subject merchandise at less than normal value during the respective relevant period of review. Also, the Department determined in its lone administrative review that Mukand, Ltd. (''Mukand'') did not dump during the review period (1996–1997).

after the issuance of the order. If companies continue dumping with the discipline of an order in place, the Department may reasonably infer that dumping would continue were the discipline removed. Additionally, if dumping was eliminated and import volumes declined significantly, the Department normally will determine that dumping is likely to continue or recur. Although the cash deposit rate for Viraj, Panchmahal, and Mukand is currently zero, the cash deposit rates for all other producers/exporters is above *de minimis*. Further, the volume of imports has declined significantly since the issuance of the order.

In conclusion, inasmuch as import volumes of the subject merchandise have declined significantly after the issuance of the order, cash deposit rate remains at a level above *de minimis* for some exporters, and the respondent interested parties waived their right to participate in this review, we determine that revocation of the antidumping duty order would be likely to lead to continuation or recurrence of dumping.

Magnitude of the Margin

In the *Sunset Policy Bulletin*, the Department stated that it will normally provide to the Commission the margin that was determined in the final determination in the original investigation. Further, for companies not specifically investigated or for companies that did not begin shipping until after the order was issued, the Department normally will provide a margin based on the *all-others* rate from the investigation. (*See* section II.B.1 of the *Sunset Policy Bulletin*.) Exceptions to this policy include the use of a more recently calculated margin, where appropriate, and consideration of duty absorption determinations. (See sections II.B.2 and 3 of the *Sunset Policy Bulletin*.)

The Department, in its notice of the antidumping duty order on SSWR from India, established both company-specific and all-others weighted-average dumping margins.[5] We note that, to date, the Department has not issued any duty absorption findings in this case.

The domestic interested parties assert that the likely-to-prevail margins, if the order is revoked, should be those from the original investigation. (*See* the domestic interested parties' June 2, 1999, substantive response at 24–25.)

We agree with the domestic interested parties. Absent argument and evidence to the contrary, we determine that, were the order revoked, the margins calculated in the original investigation are indicative of the behavior of Indian manufacturers/exporters of the subject merchandise because the margins from the original investigation are the only ones that reflect Indian manufacturers/exporters' behavior absent the discipline of the order. Therefore, the Department will report to the Commission the company-specific and all-others margins reported in the *Final Results of Review* section of this notice.

Final Results of Review

Based on the above analysis, the Department finds that revocation of the antidumping order would likely lead to continuation or recurrence of dumping at the margins listed below:

Manufacturer/exporter	Margin (percent)
Mukand, Ltd	48.80
Sunstar Metals, Ltd	48.80
Grand Foundry, Ltd	48.80
All others	48.80

This notice serves as the only reminder to parties subject to administrative protective order (''APO'') of their responsibility concerning the disposition of proprietary information disclosed under APO in accordance with 19 CFR 351.305 of the Department's regulations. Timely notification of return/destruction of APO materials or conversion to judicial protective order is hereby requested. Failure to comply with the regulations and the terms of an APO is a sanctionable violation.

This five-year (''sunset'') review and notice are in accordance with sections 751(c), 752, and 777(i)(1) of the Act.

Dated: January 27, 2000.

Holly A. Kuga,

Acting Assistant Secretary for Import Administration.

[FR Doc. 00–2419 Filed 2–2–00; 8:45 am]

BILLING CODE 3510–DS–P

[5] *See* footnote 1, *supra*.

DEPARTMENT OF COMMERCE

International Trade Administration

[A–427–811]

Final Results of Expedited Sunset Review: Stainless Steel Wire Rods From France

AGENCY: Import Administration, International Trade Administration, Department of Commerce.

ACTION: Notice of final results of expedited sunset review: Stainless steel wire rods from France.

SUMMARY: On July 1, 1999, the Department of Commerce (the ''Department'') initiated a sunset review of the antidumping duty order on stainless steel wire rods from France (64 FR 35588) pursuant to section 751(c) of the Tariff Act of 1930, as amended (the ''Act''). On the basis of a notice of intent to participate and adequate substantive response filed on behalf of domestic interested parties and a waiver of participation from respondent interested parties, the Department determined to conduct an expedited sunset review. As a result of this review, the Department finds that revocation of the antidumping duty order would be likely to lead to continuation or recurrence of dumping at the levels indicated in the *Final Result of Review* section of this notice.

FOR FURTHER INFORMATION CONTACT: Eun W. Cho or Melissa G. Skinner, Office of Policy for Import Administration, International Trade Administration, U.S. Department of Commerce, 14th Street and Constitution Avenue, N.W., Washington, D.C. 20230; telephone: (202) 482–1698 or (202) 482–1560, respectively.

EFFECTIVE DATE: February 3, 2000.

Statute and Regulations

This review was conducted pursuant to sections 751(c) and 752 of the Act. The Department's procedures for the conduct of sunset reviews are set forth in the Procedures for Conducting Five-year (''Sunset'') Reviews of Antidumping and Countervailing Duty Orders, 63 FR 13516 (March 20, 1998) (''Sunset Regulations'') and in 19 CFR Part 351 (1999) in general. Guidance on methodological or analytical issues relevant to the Department's conduct of sunset reviews is set forth in the Department's Policy Bulletin 98:3—Policies Regarding the Conduct of Five-year (''Sunset'') Reviews of Antidumping and Countervailing Duty Orders; Policy Bulletin, 63 FR 18871 (April 16, 1998) (''Sunset Policy Bulletin'').

Scope

Imports covered by this order are shipments of stainless steel wire rods (''SSWR'') from France. SSWR are products which are hot-rolled or hot-rolled annealed and/or pickled rounds, squares, octagons, hexagons or other shapes, in coils. SSWR are made of alloy steels containing, by weight, 1.2 percent or less of carbon and 10.5 percent or more of chromium, with or without other elements. These products are only manufactured by hot-rolling and are normally sold in coiled form, and are of solid cross-section. The majority of SSWR sold in the United States are round in cross-section shape, annealed

and pickled. The most common size is 5.5 millimeters in diameter. The SSWR subject to this review are currently classifiable under subheadings 7221.00.0005, 7221.00.0015, 7221.00.0020, 7221.00.0030, 7221.00.0040, 7221.00.0045, 7221.00.0060, 7221.00.0075, and 7221.00.0080 of the Harmonized Tariff Schedule of the United States (''HTSUS'').

The HTSUS item numbers are provided for convenience and customs purposes only. The written product description of the scope of this order remains dispositive.

History of the Order

The antidumping duty order on SSWR from France was published in the **Federal Register** on January 28, 1994 (59 FR 4022). In that order, the Department determined that the weighted-average dumping margins for Imphy, S.A. (''Imphy''), Ugine-Savoie (''Ugine''), and all others are 24.51 percent.[1] Since that time, the Department has completed several administrative reviews.[2] We note that the Department has not conducted any duty-absorption investigation with respect to the subject merchandise. The order remains in effect for all manufacturers and exporters of the subject merchandise.

Background

On July 1, 1999, the Department initiated a sunset review of the antidumping duty order on SSWR from France (64 FR 35588) pursuant to section 751(c) of the Act. The Department received a joint Notice of Intent to Participate on behalf of AL Tech Specialty Steel Corp., Carpenter Technology Corp., Republic Engineered Steels, Inc., Talley Metals Technology, Inc., and the United Steelworkers of America, AFL–CIO/CLC (hereinafter referred to as ''domestic interested parties'') on July 16, 1999, within the deadline specified in section 351.218(d)(1)(i) of the Sunset Regulations. In their Notice of Intent to Participate, the domestic interested parties note that they are not related to foreign producers/exporters or to domestic importers of the subject merchandise, nor are they importers of the subject merchandise within the meaning of section 771(4)(B) of the Act.

We received a complete substantive response from the domestic interested parties on August 2, 1999, within the 30-day deadline specified in section 351.218(d)(3)(i) of the Sunset Regulations. The domestic interested parties claim interest party status under sections 771(9)(C) and 771(9)(D) of the Act as producers/manufacturers of a domestic like product and as a union representing workers engaged in the production of the like product in the United States, respectively. The domestic interested parties note that each of the domestic interested parties has been involved in these proceedings since the investigation and that, as a group, they are willing to participate fully in the instant review.

We did not receive a substantive response from any respondent interested party to this proceeding. However, Ugine, Imphy, and their affiliated U.S. importers, Metalimphy Alloys Corp (''MAC'') and Techalloy Company jointly submitted a waiver of participation in the instant review. (See the respondent interested parties' August 2, 1999, waiver of participation.) Consequently, pursuant to section 351.218(e)(1)(ii)(C) of the Sunset Regulations, we determined to conduct an expedited, 120-day, review of this order.

In accordance with section 751(c)(5)(C)(v) of the Act, the Department may treat a review as extraordinarily complicated if it is a review of a transition order (*i.e.*, an order in effect on January 1, 1995). Therefore, on November 16, 1999, the Department determined that the sunset review of the antidumping duty order on SSWR from France is extraordinarily complicated and extended the time limit for completion of the final results of this review until not later than January 27, 2000, in accordance with section 751(c)(5)(B) of the Act.[3]

Determination

In accordance with section 751(c)(1) of the Act, the Department conducted this review to determine whether revocation of the antidumping order would be likely to lead to continuation or recurrence of dumping. Section 752(c) of the Act provides that, in making this determination, the Department shall consider the weighted-average dumping margins determined in the investigation and subsequent reviews and the volume of imports of the subject merchandise for the period before and the period after the issuance of the antidumping order, and shall provide to the International Trade Commission (''the Commission'') the magnitude of the margin of dumping likely to prevail if the order is revoked.

The Department's determinations concerning continuation or recurrence of dumping and the magnitude of the margin are discussed below. In addition, the comments of the domestic interested parties, with respect to continuation or recurrence of dumping and the magnitude of the margin, are addressed within the respective sections below.

Continuation or Recurrence of Dumping

Drawing on the guidance provided in the legislative history accompanying the Uruguay Round Agreements Act (''URAA''), specifically the Statement of Administrative Action (''the SAA''), H.R. Doc. No. 103–316, vol. 1 (1994), the House Report, H.R. Rep. No. 103–826, pt. 1 (1994), and the Senate Report, S. Rep. No. 103–412 (1994), the Department issued its Sunset Policy Bulletin providing guidance on methodological and analytical issues, including the bases for likelihood determinations. In its Sunset Policy Bulletin, the Department indicated that determinations of likelihood will be made on an order-wide basis (see section II.A.2). In addition, the Department indicated that normally it will determine that revocation of an antidumping order is likely to lead to continuation or recurrence of dumping where (a) dumping continued at any level above *de minimis* after the issuance of the order, (b) imports of the subject merchandise ceased after the issuance of the order, or (c) dumping was eliminated after the issuance of the order and import volumes for the subject merchandise declined significantly (see section II.A.3).

In addition to considering the guidance on likelihood cited above, section 751(c)(4)(B) of the Act provides that the Department shall determine that revocation of an order is likely to lead

[1] See Amended Final Determination and Antidumping Duty Order: Certain Stainless Steel Wire Rods from France, 59 FR 4022 (January 28, 1994).

[2] See Certain Stainless Steel Wire Rod From France; Final Results of Antidumping Duty Administrative Review, 61 FR 47874 (September 11, 1996), as amended, Certain Stainless Steel Wire Rod from France; Amended Final Results of Antidumping Duty Administrative Review, 61 FR 58523 (November 15, 1996); Certain Stainless Steel Wire Rod From France; Final Results of Antidumping Duty Administrative Review, 62 FR 7206 (February 18, 1997), as amended, Certain Stainless Steel Wire Rod from France; Amended Final Results of Antidumping Duty Administrative Review, 62 FR 25915 (May 12, 1997); Certain Stainless Steel Wire Rod From France; Final Results of Antidumping Duty Administrative Review, 63 FR 30185 (June 3, 1998), as amended, Certain Stainless Steel Wire Rod from France; Amended Final Results of Antidumping Duty Administrative Review, 63 FR 45998 (August 28, 1998); as amended, Certain Stainless Steel Wire Rod from France; Amended Final Results of Antidumping Duty Administrative Review, 64 FR 47169 (August 30, 1999).

[3] See Extension of Time Limit for Final Results of Five-Year Reviews, 64 FR 62167 (November 16, 1999).

to continuation or recurrence of dumping where a respondent interested party waives its participation in the sunset review. In the instant review, the respondent interested parties submitted a waiver of participation.

The domestic interested parties contend that revocation of the order would be likely to lead to continued dumping by French manufacturers/exporters of the subject merchandise. In support of their argument, the domestic interested parties note that the Department found French manufacturers/exporters dumping in every administrative review of the order. Moreover, the domestic interested parties indicate that the order has had a significant effect on the import volumes of subject merchandise. Specifically, the domestic interested parties state that, prior to the initiation of the investigation, the average import volume for the three year (1990–1992) period was 14.16 million pounds but that, subsequent to the order, the average import volume for the three year (1994–1996) period was 8.7 million pounds—a 38.6 percent decline. (See August 2, 1999, substantive response of the domestic interested parties at 14–17 and 18–20.) Since the import volumes of the subject merchandise decreased substantially and since the existence of dumping margins after the issuance of the order is highly probative of the likelihood of continuation or recurrence of dumping, the domestic interested parties contend the Department should conclude that French manufacturers/exporters cannot export SSWR to the United States without dumping and, hence, that revocation of the order would be likely to lead to continued dumping. *Id.*

The domestic interested parties' argument concerning the import volumes of the subject merchandise is in accord with the data in the Commission's Interactive Tariff and Trade Data Web. In the year preceding the initiation of the investigation, 1992, the import volume of the subject merchandise was 10,103 metric tons. In the year following the order, 1994, the import volume decreased to 5,346 metric tons—a decline of about 47 percent. In addition, from 1994 to 1998, the average import volume of the subject merchandise was about 3,914 metric tons, which is about 39 percent of the pre-order volume. Therefore, we determine that import volumes of the subject merchandise declined substantially after the issuance of the order.

As indicated in section II.A.3 of the *Sunshine Policy Bulletin* reflecting the SAA at 889–890, Senate Report at 52, and the House Report at 63–64, the Department considered whether dumping continued at any level above *de minimis* after the issuance of the order. If companies continue to dump with the discipline of an order in place, the Department may reasonably infer that dumping would continue were the discipline of the order removed. After examining the published findings with respect to the weighted-average dumping margins in previous administrative reviews,[4] we determine that French manufacturers/exporters continued to dump the subject merchandise after the issuance of the order.

In conclusion, inasmuch as dumping continued after the issuance of the order, import volumes of the subject merchandise have declined significantly after the imposition of the order, and the respondent interested parties waived their right to participate in this review, we determine that revocation of the antidumping duty order would be likely to lead to continuation or recurrence of dumping.

Magnitude of the Margin

In the *Sunset Policy Bulletin*, the Department stated that it will normally provide to the Commission the margin that was determined in the final determination in the original investigation. Further, for companies not specifically investigated or for companies that did not begin shipping until after the order was issued, the Department normally will provide a margin based on the *all-others* rate from the investigation. (*See* section II.B.1 of the *Sunset Policy Bulletin*.) Exceptions to this policy include the use of a more recently calculated margin, where appropriate, and consideration of duty absorption determinations. (*See* sections II.B.2 and 3 of the *Sunset Policy Bulletin*.)

The Department, in its notice of the antidumping duty order on SSWR from France, established both company-specific and all-others weighted-average dumping margins.[5] We note that, to date, the Department has not issued any duty absorption findings in this case.

The domestic interested parties assert that the likely-to-prevail margins, if the order is revoked, should be those from the original investigation. (See the domestic interested parties' June 2, 1999, substantive response at 24–25.)

We agree with the domestic interested parties. Absent argument and evidence to the contrary, we find that the margins calculated in the original investigation are probative of the behavior of French manufacturers/exporters of the subject merchandise were the order revoked because the margins from the original investigation are the only ones that reflect their behavior absent the discipline of the order. Therefore, the Department will report to the Commission the company-specific and all-others margins reported in the Final Results of Review section of this notice.

Final Results of Review

Based on the above analysis, the Department finds that revocation of the antidumping order would likely lead to continuation or recurrence of dumping at the margins listed below:

Manufacturer/exporter	Margin (percent)
Imphy	24.39
Ugine-Savoie	24.39
All others	24.39

This notice serves as the only reminder to parties subject to administrative protective order (''APO'') of their responsibility concerning the disposition of proprietary information disclosed under APO in accordance with 19 CFR 351.305 of the Department's regulations. Timely notification of return/destruction of APO materials or conversion to judicial protective order is hereby requested. Failure to comply with the regulations and the terms of an APO is a sanctionable violation.

This five-year (''sunset'') review and notice are in accordance with sections 751(c), 752, and 777(i)(1) of the Act.

Dated: January 27, 2000.

Holly A. Kuga,

Acting Assistant Secretary for Import Administration.

[FR Doc. 00–2420 Filed 2–2–00; 8:45 am]

BILLING CODE 3510–DS–P

[4] *See* footnote 2, *supra*. In its first administrative review of the order, as amended, the Department determined that French manufacturers/exporters of the subject merchandise were dumping the subject merchandise at the weighted-average margin of 14.15; in the second administrative review, as amended, 7.29; and in the third administrative review, as amended, 7.19.

[5] See footnote 1, *supra*.

DEPARTMENT OF COMMERCE

International Trade Administration

[A–351–819]

Final Results of Expedited Sunset Review: Stainless Steel Wire Rods From Brazil

AGENCY: Import Administration, International Trade Administration, Department of Commerce.

ACTION: Notice of Final Results of Expedited Sunset Review: Stainless Steel Wire Rods From Brazil.

SUMMARY: On July 1, 1999, the Department of Commerce (the ''Department'') initiated a sunset review of the antidumping duty order on stainless steel wire rods from Brazil (64 FR 35588) pursuant to section 751(c) of the Tariff Act of 1930, as amended (the ''Act''). On the basis of a notice of intent to participate and adequate substantive response filed on behalf of domestic interested parties and inadequate response (in this case, no response) from respondent interested parties, the Department determined to conduct an expedited sunset review. As a result of this review, the Department finds that revocation of the antidumping duty order would be likely to lead to continuation or recurrence of dumping at the levels indicated in the Final Result of Review section of this notice.

FOR FURTHER INFORMATION CONTACT: Eun W. Cho or Melissa G. Skinner, Office of Policy for Import Administration, International Trade Administration, U.S. Department of Commerce, 14th Street and Constitution Avenue, N.W., Washington, D.C. 20230; telephone: (202) 482–1698 or (202) 482–1560, respectively.

EFFECTIVE DATE: February 3, 2000.

Statute and Regulations

This review was conducted pursuant to sections 751(c) and 752 of the Act. The Department's procedures for the conduct of sunset reviews are set forth in the *Procedures for Conducting Five-year (''Sunset'') Reviews of Antidumping and Countervailing Duty Orders*, 63 FR 13516 (March 20, 1998) (''*Sunset Regulations*'') and in 19 CFR Part 351 (1999) in general. Guidance on methodological or analytical issues relevant to the Department's conduct of sunset reviews is set forth in the Department's Policy Bulletin 98:3—*Policies Regarding the Conduct of Five-year (''Sunset'') Reviews of Antidumping and Countervailing Duty Orders; Policy Bulletin*, 63 FR 18871 (April 16, 1998) (''*Sunset Policy Bulletin*'').

Scope

Imports covered by this order are shipments of stainless steel wire rods (''SSWR'') from Brazil. SSWR are products which are hot-rolled or hot-rolled annealed and/or pickled rounds, squares, octagons, hexagons or other shapes, in coils. SSWR are made of alloy steels containing, by weight, 1.2 percent or less of carbon and 10.5 percent or more of chromium, with or without other elements. These products are only manufactured by hot-rolling and are normally sold in coiled form, and are of solid cross-section. The majority of SSWR sold in the United States are round in cross-section shape, annealed and pickled. The most common size is 5.5 millimeters in diameter. The SSWR subject to this review are currently classifiable under subheadings 7221.00.0005, 7221.00.0015, 7221.00.0020, 7221.00.0030, 7221.00.0040, 7221.00.0045, 7221.00.0060, 7221.00.0075, and 7221.00.0080 of the Harmonized Tariff Schedule of the United States (''HTSUS'').

The HTSUS item numbers are provided for convenience and customs purposes only. The written product description of the scope of this order remains dispositive.

History of the Order

The antidumping duty order on SSWR from Brazil was published in the **Federal Register** on January 28, 1994 (59 FR 4021). In that order, the Department determined that the weighted-average dumping margins for Eletrometal-Metal Especials S.A. (''Eletrometal''), Acos Finos Piratini S.A. (''Piratini''), Acos Villares S.A. (''Villares''), and all others are 24.63, 26.50, 26.50, and 25.88 percent *ad valorem,* respectively. [1] Since that time, the Department has not completed administrative review of the order. We note that the Department has not conducted any duty-absorption investigations with respect to the subject merchandise. The order remains in effect for all manufacturers and exporters of the subject merchandise.

Background

On July 1, 1999, the Department initiated a sunset review of the antidumping duty order on SSWR from Brazil (64 FR 35588) pursuant to section 751(c) of the Act. The Department received a joint Notice of Intent to Participate on behalf of AL Tech Specialty Steel Corp., Carpenter Technology Corp., Republic Engineered Steels, Inc., Talley Metals Technology, Inc., and the United Steelworkers of America, AFL–CIO/CLC (hereinafter referred to as ''domestic interested parties'') on July 16, 1999, within the deadline specified in section 351.218(d)(1)(i) of the *Sunset Regulations*. In their Notice of Intent to Participate, the domestic interested parties note that they are not related to foreign manufacturers/exporters or to domestic importers of the subject merchandise, nor are they importers of the subject merchandise within the meaning of section 771(4)(B) of the Act.

We received a complete substantive response from the domestic interested parties on August 2, 1999, within the 30-day deadline specified in section 351.218(d)(3)(i) of the *Sunset Regulations*. The domestic interested parties claim interested party status under sections 771(9)(C) and 771(9)(D) of the Act as producers/manufacturers of a domestic like product and as a union representing workers engaged in the production of the like product in the United States, respectively. The domestic interested parties note that each of the domestic interested parties has been involved in these proceedings since the investigation and that, as a group, they are willing to participate fully in the instant review.

We did not receive a substantive response from any respondent interested party to this proceeding. Consequently, pursuant to section 351.218(e)(1)(ii)(C) of the *Sunset Regulations*, we determined to conduct an expedited, 120-day, review of this order.

In accordance with section 751(c)(5)(C)(v) of the Act, the Department may treat a review as extraordinarily complicated if it is a review of a transition order (*i.e.*, an order in effect on January 1, 1995). Therefore, on November 16, 1999, the Department determined that the sunset review of the antidumping duty order on SSWR from Brazil is extraordinarily complicated and extended the time limit for completion of the final results of this review until not later than January 27, 2000, in accordance with section 751(c)(5)(B) of the Act.[2]

Determination

In accordance with section 751(c)(1) of the Act, the Department conducted this review to determine whether revocation of the antidumping order would be likely to lead to continuation or recurrence of dumping. Section 752(c) of the Act provides that, in making this determination, the Department shall consider the weighted-average dumping margins determined in the investigation and subsequent reviews and the volume of imports of the subject merchandise for the period before and the period after the issuance of the antidumping order, and shall provide to the International Trade

[1] *See Antidumping Duty Order: Certain Stainless Steel Wire Rods from Brazil*, 59 FR 4021 (January 28, 1994).

[2] *See Extension of Time Limit for Final Results of Five-Year Reviews*, 64 FR 62167 (November 16, 1999).

Commission (''the Commission'') the magnitude of the margin of dumping likely to prevail if the order is revoked.

The Department's determinations concerning continuation or recurrence of dumping and the magnitude of the margin are discussed below. In addition, the comments of the domestic interested parties, with respect to continuation or recurrence of dumping and the magnitude of the margin, are addressed within the respective sections below.

Continuation or Recurrence of Dumping

Drawing on the guidance provided in the legislative history accompanying the Uruguay Round Agreements Act (''URAA''), specifically the Statement of Administrative Action (''the SAA''), H.R. Doc. No. 103–316, vol. 1 (1994), the House Report, H.R. Rep. No. 103–826, pt. 1 (1994), and the Senate Report, S. Rep. No. 103–412 (1994), the Department issued its *Sunset Policy Bulletin* providing guidance on methodological and analytical issues, including the bases for likelihood determinations. In its *Sunset Policy Bulletin*, the Department indicated that determinations of likelihood will be made on an order-wide basis (see section II.A.2). In addition, the Department indicated that normally it will determine that revocation of an antidumping order is likely to lead to continuation or recurrence of dumping where (a) dumping continued at any level above *de minimis* after the issuance of the order, (b) imports of the subject merchandise ceased after the issuance of the order, or (c) dumping was eliminated after the issuance of the order and import volumes for the subject merchandise declined significantly (*see* section II.A.3).

In addition to considering the guidance on likelihood cited above, section 751(c)(4)(B) of the Act provides that the Department shall determine that revocation of an order is likely to lead to continuation or recurrence of dumping where a respondent interested party waives its participation in the sunset review. In the instant review, the Department did not receive a response from any respondent interested party. Pursuant to section 351.218(d)(2)(iii) of the *Sunset Regulations*, this constitutes a waiver of participation.

The domestic interested parties argue that if the order is revoked, Brazilian manufacturer/exporters of the subject merchandise would be likely to continue or to resume selling SSWR at less than fair market value in the United States. The domestic interested parties indicate that, prior to the initiation of the antidumping duty order (1990–1992), Brazilian manufacturers/exporters exported, on the average, 4.73 million pounds of the subject merchandise per annum. The domestic interested parties further note that, subsequent to the issuance of the order (1994–1996), Brazilian manufacturers/exporters' annual average export of SSWR to the United States declined dramatically to 10,692 pounds per year: a 99.8 percent decline. In addition, during 1996–1998, no Brazilian SSWR was exported to the United States. The domestic interested parties urge that, based on the aforementioned cessation of imports of the subject merchandise, the Department should conclude that revocation of the order would be likely to lead to resumption of dumping of the subject merchandise in the United States. (See August 2, 1999, substantive response of the domestic interested parties at 14–18.)

In conclusion, the domestic interested parties contend that, since Brazilian manufacturers/exporters have not been able to export SSWR to the United States with the discipline of the order in place, the Department should determine that Brazilian manufacturers/exporters of the subject merchandise have to resume dumping if and when they reenter the U.S. market. *Id.*

According to the data in the Commission's Interactive Tariff and Trade Data Website, during 1992, the year prior to the initiation of the investigation, the import volume of the subject merchandise was about 1,275 metric tons. In the year following the order, 1994, the import volume decreased to about 7 metric tons—more than a 99 percent decline. Furthermore, from 1995 to 1998, imports of the subject merchandise completely stopped. Therefore, we determine that imports of the subject merchandise ceased after the issuance of the order.

As noted above, the Department normally will determine that the cessation of imports after the issuance of the order is highly probative of the likelihood of continuation or recurrence of dumping if the order is to be revoked.

Furthermore, pursuant to section II.A.3 of the *Sunset Policy Bulletin* reflecting the SAA at 889–890, Senate Report at 52, and the House Report at 63–64, the Department considered whether dumping had continued at any level above *de minimis* after the issuance of the order. If companies continue dumping with the discipline of an order in place, the Department may reasonably infer that dumping would continue were the discipline removed. In the instant case, the cash deposit requirements for the subject merchandise entering the United States have been in effect since the imposition of the order.

In conclusion, inasmuch as imports of the subject merchandise ceased after the issuance of the order, the cash deposit rates continue to exist, and the respondent interested parties waived their right to participate in this review, we find that revocation of the antidumping duty order would be likely to lead to continuation or recurrence of dumping.

Magnitude of the Margin

In the *Sunset Policy Bulletin*, the Department stated that it will normally provide to the Commission the margin that was determined in the final determination in the original investigation. Further, for companies not specifically investigated or for companies that did not begin shipping until after the order was issued, the Department normally will provide a margin based on the *all-others* rate from the investigation. (*See* section II.B.1 of the *Sunset Policy Bulletin*.) Exceptions to this policy include the use of a more recently calculated margin, where appropriate, and consideration of duty absorption determinations. (*See* sections II.B.2 and 3 of the *Sunset Policy Bulletin*.)

The Department, in its notice of the antidumping duty order on SSWR from Brazil, established both company-specific and all-others weighted-average dumping margins.[3] We note that, to date, the Department has not issued any duty absorption findings in this case.

The domestic interested parties contend the Department should select the weighted-average margins from the original investigation when the Department determines the margins that are likely to prevail were the order to be revoked. (*See* the domestic interested parties' June 2, 1999, substantive response at 24–25.)

We agree with the domestic interested parties. Absent argument and evidence to the contrary, we determine that the margins calculated in the original investigation are representative of Brazilian manufacturers/exporters' behavior without the discipline of the order. Therefore, the Department will report to the Commission the company-specific and all-others margins reported in the *Final Results of Review* section of this notice.

Final Results of Review

Based on the above analysis, the Department finds that revocation of the antidumping order would likely lead to

[3] See footnote 1, *supra.*

continuation or recurrence of dumping at the margins listed below:

Manufacturer/exporter	Margin (percent)
Eletrometal	24.63
Piratini	26.50
Villares	26.50
All others	25.88

This notice serves as the only reminder to parties subject to administrative protective order (''APO'') of their responsibility concerning the disposition of proprietary information disclosed under APO in accordance with 19 CFR 351.305 of the Department's regulations. Timely notification of return/destruction of APO materials or conversion to judicial protective order is hereby requested. Failure to comply with the regulations and the terms of an APO is a sanctionable violation.

This five-year (''sunset'') review and notice are in accordance with sections 751(c), 752, and 777(i)(1) of the Act.

Dated: January 27, 2000.

Holly A. Kuga,

Acting Assistant Secretary for Import Administration.

[FR Doc. 00–2421 Filed 2–2–00; 8:45 am]

BILLING CODE 3510–DS–P

DEPARTMENT OF COMMERCE

International Trade Administration

University of Massachusetts Notice of Decision on Application for Duty-Free Entry of Electron Microscope

This is a decision pursuant to Section 6(c) of the Educational, Scientific, and Cultural Materials Importation Act of 1966 (Pub. L. 89–651, 80 Stat. 897; 15 CFR part 301). Related records can be viewed between 8:30 A.M. and 5:00 P.M. in Room 4211, U.S. Department of Commerce, 14th and Constitution Avenue, N.W., Washington, D.C.

Docket Number: 99–030. *Applicant:* University of Massachusetts, Amherst, MA 01003–5810. *Instrument:* Electron Microscope, Model Tecnai 12. *Manufacturer:* FEU Company, The Netherlands. *Intended Use:* See notice at 64 FR 72649, December 28, 1999. *Order Date:* August 4, 1999.

Comments: None received. Decision: Approved. No instrument of equivalent scientific value to the foreign instrument, for such purposes as the instrument is intended to be used, was being manufactured in the United States at the time the instrument was ordered. Reasons: The foreign instrument is a conventional transmission electron microscope (CTEM) and is intended for research or scientific educational uses requiring a CTEM. We know of no CTEM, or any other instrument suited to these purposes, which was being manufactured in the United States at the time of order of the instrument.

Frank W. Creel,

Director, Statutory Import Programs Staff.

[FR Doc. 00–2418 Filed 2–2–00; 8:45 am]

BILLING CODE 3510–DS–P

DEPARTMENT OF COMMERCE

National Oceanic and Atmospheric Administration

[I.D. 010600C]

Availability of a Draft Environmental Assessment/Finding of No Significant Impact and Receipt of an Application for an Incidental Take Permit (1232).

AGENCY: National Marine Fisheries Service (NMFS), National Oceanic and Atmospheric Administration, Commerce

ACTION: Notice of availability.

SUMMARY: NMFS has received an application for an incidental take permit (Permit) from the Oregon Department of Fish and Wildlife (ODFW) and the Washington Department of Fish and Wildlife (WDFW) pursuant to section 10(a)(1)(B) of the Endangered Species Act of 1973, as amended (ESA). As required by section 10 (a)(2)(B) of the ESA, ODFW and WDFW have also prepared a conservation plan (Plan) designed to minimize and mitigate any such take of endangered or threatened species. The Permit application is for the incidental take of ESA-listed adult and juvenile salmonids associated with otherwise lawful sport and commercial fisheries on non-listed species in the lower and middle Columbia River and its tributaries in the Pacific Northwest. The duration of the proposed Permit and Plan is one year. The Permit application includes the proposed Plan submitted by ODFW and WDFW. NMFS also announces the availability of a draft Environmental Assessment (EA) for the Permit application. NMFS is furnishing this notice in order to allow other agencies and the public an opportunity to review and comment on these documents. All comments received will become part of the public record and will be available for review pursuant to section 10(c) of the ESA.

DATES: Written comments from interested parties on the Permit application, Plan, and draft EA must be received at the appropriate address or fax number no later than 5:00pm Pacific standard time on March 6, 2000.

ADDRESSES: Written comments on the application, Plan, or draft EA should be sent to Robert Koch, Protected Resources Division, F/NWO3, 525 NE Oregon Street, Suite 500, Portland, OR 97232–2737. Comments may also be sent via fax to 503–230–5435. Comments will not be accepted if submitted via e-mail or the internet. Requests for copies of the Permit application, Plan, and draft EA should be directed to the Protected Resources Division (PRD), F/NWO3, 525 NE Oregon Street, Suite 500, Portland, OR 97232–2737. Comments received will also be available for public inspection, by appointment, during normal business hours by calling 503–230–5424.

FOR FURTHER INFORMATION CONTACT: Robert Koch, Portland, OR (ph: 503–230–5424, fax: 503–230–5435, e-mail: Robert.Koch@noaa.gov).

SUPPLEMENTARY INFORMATION: Section 9 of the ESA and Federal regulations prohibit the ''taking'' of a species listed as endangered or threatened. The term ''take'' is defined under the ESA to mean harass, harm, pursue, hunt, shoot, wound, kill, trap, capture, or collect, or to attempt to engage in any such conduct. NMFS may issue permits, under limited circumstances, to take listed species incidental to, and not the purpose of, otherwise lawful activities. NMFS regulations governing permits for threatened and endangered species are promulgated at 50 CFR 222.307.

Species Covered in This Notice

The following species and evolutionarily significant units (ESU's) are included in the Plan and Permit application:

Fish

Chinook salmon (*Oncorhynchus tshawytscha*): threatened, naturally produced and artificially propagated Snake River (SnR) spring/summer, threatened SnR fall, endangered, naturally produced and artificially propagated upper Columbia River (UCR) spring, threatened lower Columbia River (LCR), threatened upper Willamette River (UWR).

Sockeye salmon (*O. nerka*): endangered SnR.

Steelhead (*O. mykiss*): threatened SnR, endangered naturally produced and artificially propagated UCR, threatened middle Columbia River (MCR), threatened LCR, threatened UWR.

To date, protective regulations for threatened LCR and UWR chinook

salmon, and threatened SnR, MCR, LCR, and UWR steelhead under section 4(d) of the ESA have not been promulgated by NMFS. This notice of receipt of an application requesting takes of these species is issued as a precaution in the event that NMFS issues protective regulations that prohibit takes of threatened LCR and/or UWR chinook salmon, and/or threatened SnR, MCR, LCR, and/or UWR steelhead. The initiation of a 30-day public comment period on the application, including its proposed takes of threatened LCR and UWR chinook salmon, and threatened SnR, MCR, LCR, and UWR steelhead does not presuppose the contents of the eventual protective regulations.

Background

From 1996–1999, the ODFW and WDFW sport and commercial fisheries have been managed under the terms of the Columbia River Fishery Management Plan (CRFMP). Since NMFS was a signatory party to the CFRMP, and approval of the CRFMP was a federal action subject to section 7 consultation, incidental take associated with the ODFW and WDFW fisheries was authorized in biological opinions issued on the CFRMP. NMFS has advised the states that, with the expiration of the CRFMP, and absent any subsequent agreement among the parties to *U.S.* v. *Oregon*, there is no longer a federal action that provides a nexus for section 7 consultation. Because the immediate prospects for reaching an agreement were uncertain, ODFW and WDFW have applied for a one-year ESA section 10(a)(1)(B) permit for incidental takes of ESA-listed adult and juvenile salmonids associated with sport and commercial fisheries during 2000 on non-listed species in the lower and middle Columbia River and its tributaries in the Pacific Northwest.

Conservation Plan

The Conservation Plan prepared by ODFW and WDFW describes measures designed to monitor, minimize, and mitigate the incidental takes of ESA-listed anadromous salmonids associated with some or all of the following fisheries which are expected to occur during 2000 with approximate dates as specified:

Winter commercial sturgeon fishery in the lower Columbia River: January thru February.

Winter commercial salmon fishery in the lower Columbia River: February 15 thru March 10.

Spring chinook salmon sport fishery in the lower Columbia River: January 1 thru March 11.

Spring chinook salmon sport fishery on returns from net-pen release programs in the lower Columbia River: entire year

Steelhead sport fishery in the lower Columbia River: May 16 thru December 31.

Spring chinook salmon commercial fishery at Youngs Bay, Tongue Point Basin, and Blind Slough in the lower Columbia River: mid-February thru mid-June.

Spring chinook salmon test fishery near the Reed Island area in the lower Columbia River: April

Spring chinook salmon test fishery in select areas of the lower Columbia River: February thru July.

Spring chinook salmon/steelhead fishery in the middle Columbia River near the outlet to Ringold Hatchery (Spring Creek): May 15 thru July 31 for chinook salmon, June 16 thru December 31 for steelhead.

Spring chinook salmon subsistence fishery in the middle Columbia River below Priest Rapids Dam for the Wanapum Tribe: May thru July.

Smelt commercial fishery/test fishery in the mainstem Columbia River and tributaries, smelt recreational fishery primarily in the tributaries of the Columbia River, and anchovy/herring commercial bait fishery in the Columbia River estuary: entire year.

Shad commercial fishery in the lower Columbia River: May and June.

Shad commercial fishery in the Washougal Reef area of the lower Columbia River: May and June.

Shad recreational fishery in the lower Columbia River: entire year; a sturgeon recreational fishery in the lower Columbia River: entire year.

Sturgeon tagging stock assessment project in the lower Columbia River: May thru July.

Warm water recreational fishery (primarily for spiny-rays) in the lower and middle Columbia River up to Priest Rapids Dam: entire year.

ESA-listed fish incidental mortalities associated with the ODFW and WDFW fishery programs are requested at levels specified in the Permit application. ODFW/WDFW are proposing to limit state in-river fisheries such that the incidental impacts on ESA-listed salmonids will be minimized. Six alternatives for the ODFW and WDFW fisheries were provided in the Plan, including: (1) The no action alternative; (2) the proposed conservation plan alternative (based on 1996–1999 Management Agreement Limits); (3) historic fishing levels; (4) CRFMP fishing levels; (5) levels based on the Willamette Subbasin Plan; and (6) 1996–99 Actual Harvest Rates.

Environmental Assessment/Finding of No Significant Impact

The EA package includes a draft EA and a draft Finding of No Significant Impact (FONSI) which concludes that issuing the incidental take permit is not a major Federal action significantly affecting the quality of the human environment, within the meaning of section 102(2)(C) of the National Environmental Policy Act (NEPA) of 1969, as amended. Three Federal action alternatives have been analyzed in the EA, including: (1) The no action alternative; (2) issue a permit without conditions; and (3) issue a permit with conditions.

This notice is provided pursuant to section 10(c) of the ESA and the NEPA regulations (40 CFR 1506.6). NMFS will evaluate the application, associated documents, and comments submitted thereon to determine whether the application meets the requirements of the NEPA regulations and section 10(a) of the ESA. If it is determined that the requirements are met, a permit will be issued for incidental takes of ESA-listed anadromous salmonids under the jurisdiction of NMFS. The final NEPA and permit determinations will not be completed until after the end of the 30-day comment period and will fully consider all public comments received during the comment period. NMFS will publish a record of its final action in the Federal Register.

Dated: January 28, 2000.

Wanda L. Cain,

Chief, Endangered Species Division, Office of Protected Resources, National Marine Fisheries Service.

[FR Doc. 00–2290 Filed 1–28–00; 4:20 pm]

BILLING CODE 3510–22–F

DEPARTMENT OF COMMERCE

National Oceanic and Atmospheric Administration

[I.D. 012800C]

New England Fishery Management Council; Public Meeting

AGENCY: National Marine Fisheries Service (NMFS), National Oceanic and Atmospheric Administration (NOAA), Commerce.

ACTION: Notice of public meeting.

SUMMARY: The New England Fishery Management Council (Council) is scheduling a public meeting of its Groundfish Oversight Committee and Groundfish Advisory Panel on February 16, 2000, to consider actions affecting New England fisheries in the exclusive

economic zone. Recommendations from these groups will be brought to the full Council for formal consideration and action, if appropriate.

DATES: The meeting will be held on February 16, 2000, at 9:30 a.m.

ADDRESSES: The meeting will be held at the Sheraton Ferncroft Hotel, 50 Ferncroft Road, Danvers, MA 01923; telephone 978–777–2500.

Council Address: New England Fishery Management Council, 50 Water Street, The Tannery-Mill 2, Newburyport, MA 01950, telephone 978–465–0492.

FOR FURTHER INFORMATION CONTACT: Paul J. Howard, Executive Director, New England Fishery Management Council (978) 465–0492.

SUPPLEMENTARY INFORMATION: The Groundfish Oversight Committee and Groundfish Advisory Panel will hear a presentation by the Northeast Fisheries Science Center on current information regarding fish stock boundaries in the region. The Committee and Panel will review problems and issues identified during the scoping process of Amendment 13 to the Northeast Multispecies Fishery Management Plan and organize the amendment development strategy. This organization may include the formation of working groups consisting of advisory panel and committee members, and will include the initial tasking of work to be completed by the Council Staff and Plan Development Team.

Although non-emergency issues not contained in this agenda may come before this Council for discussion, these issues may not be the subject of formal Council action during this meeting. Council action will be restricted to those issues specifically listed in this document and any issues arising after publication of this notice that require emergency action under section 305(c) of the Magnuson-Stevens Fishery Conservation and Management Act, provided the public has been notified of the Council's intent to take final action to address the emergency.

Special Accommodations

This meeting is physically accessible to people with disabilities. Requests for sign language interpretation or other auxiliary aids should be directed to Paul J. Howard (see **ADDRESSES**) at least 5 days prior to the meeting dates.

Dated: January 28, 2000.

Bruce C. Morehead,

Acting Director, Office of Sustainable Fisheries, National Marine Fisheries Service.

[FR Doc. 00–2342 Filed 2–2–00; 8:45 am]

BILLING CODE 3510–22–F

DEPARTMENT OF COMMERCE

National Oceanic and Atmospheric Administration

[I.D. 012800A]

New England Fishery Management Council; Public Meeting

AGENCY: National Marine Fisheries Service (NMFS), National Oceanic and Atmospheric Administration (NOAA), Commerce.

ACTION: Notice of public meeting.

SUMMARY: The New England Fishery Management Council (Council) is scheduling a public meeting of its Research Steering and Experimental Fisheries Committee in February, 2000. Recommendations from the Committee will be brought to the full Council for formal consideration and action, if appropriate.

DATES: The meeting will held on Wednesday, February 16, 2000, at 9 a.m.

ADDRESSES: The meeting will be held at the Sheraton Ferncroft Hotel, 50 Ferncroft Road, Danvers, MA 01923; telephone (978) 777–2500.

Council Address: New England Fishery Management Council, 50 Water Street, The Tannery-Mill 2, Newburyport, MA 01950, telephone 978–465–0492.

FOR FURTHER INFORMATION CONTACT: Paul J. Howard, Executive Director, New England Fishery Management Council 978–465–0492.

SUPPLEMENTARY INFORMATION: The Committee will finalize recommendations on regional research priorities and forward them to the NMFS Regional Administrator for consideration. The Committee also will discuss related issues, including a draft Request for Proposals concerning the expenditure of funds appropriated by Congress for the conduct of collaborative research involving the New England groundfish. Other issues to be approved relate to the Committee's role in the review of proposals submitted in response to the RFP. The Committee may also discuss how to disburse funds collected under 2000 Total Allowable Catch research set-aside proposed in Framework 13 to the Sea Scallop Fishery Management Plan.

Although non-emergency issues not contained in this agenda may come before this Council for discussion, these issues may not be the subject of formal Council action during this meeting. Council action will be restricted to those issues specifically listed in this document and any issues arising after publication of this notice that require emergency action under section 305(c) of the Magnuson-Stevens Fishery Conservation and Management Act, provided the public has been notified of the Council's intent to take final action to address the emergency.

Special Accommodations

This meeting is physically accessible to people with disabilities. Requests for sign language interpretation or other auxiliary aids should be directed to Paul J. Howard (see **ADDRESSES**) at least 5 days prior to the meeting date.

Dated: January 28, 2000.

Bruce C. Morehead,

Acting Director, Office of Sustainable Fisheries, National Marine Fisheries Service.

[FR Doc. 00–2343 Filed 2–2–00; 8:45 am]

BILLING CODE 3510–22–F

DEPARTMENT OF COMMERCE

Technology Administration

Technology Administration Fellows Program

AGENCY: Technology Administration.

ACTION: Notice.

SUMMARY: The Technology Administration is seeking private sector organizations to sponsor individuals to participate in the Technology Administration Fellows Program. Sponsors will nominate individuals who, if accepted by the Technology Administration, will spend up to one year at the Technology Administration, conducting research studies involving public policy on technology matters.

DATE: Letters of interest will be accepted on a rolling basis.

ADDRESSES AND CONTACT INFORMATION: Applications should be submitted to, and for further information contact: Ms. Joyce Hasty, Office of the Under Secretary for Technology, U.S. Department of Commerce, 14th Street and Constitution Avenue, NW, Room 4823, Washington, D.C. 20230; telephone (202) 482–5804.

SUPPLEMENTARY INFORMATION:

Authority: This Program is authorized under 15 U.S.C. 272(c)(2).

Program Description/Objectives

Under the Technology Administration Fellows Program (Program), private sector organizations (Sponsors) nominate individuals to spend up to one year working at the Technology Administration (TA), within the Department of Commerce (Department). Initial agreements will be for six months, with the opportunity to extend that period for an additional six months.

During their tenure at the Technology Administration, Fellows will be involved in a variety of activities, including conducting research studies involving public policy on technology matters and attending meetings involving the full range of issues in which the TA is involved. In pursuing these activities, Fellows may draw on information resources, both within and outside the Department, relevant to their areas of research, including working with private sector organizations and their members who possess special expertise, including the Sponsor. Fellows will be required to make quarterly presentations to Technology Administration senior management.

The goals of the Program are: support the TA's efforts to promote U.S. leadership in technology; support the Under Secretary for Technology's goals for TA; provide TA with different perspectives on technology policy issues; and provide experience to industrial representatives in the development of public policy on technology matters.

Eligibility

Sponsors must be organizations that do not have institutional conflicts of interest with the TA. For example, any organization applying for Advanced Technology Program funding this year may not sponsor Fellows. Eligible Sponsors may nominate Fellows. Nominated Fellows should be individuals within the Sponsor's upper level management up to the vice president level.

Eligibility Criteria

Sponsors will be evaluated based on the compatibility of their interests with that of the TA.

Funding

Under the Program, the Sponsor or Fellow pays for the Fellow's salary; relocation costs; living expenses; medical insurance and all other personnel benefits, including Social Security; and the Fellow's personal travel and related expenditures. The Technology Administration provides the Fellow with office facilities; secretarial and other staff support, as appropriate; and travel approved by the Technology Administration.

Application

Applicant Sponsors should submit a letter of interest. Letters of interest should be submitted to: Ms. Joyce Hasty, Office of the Under Secretary for Technology, U.S. Department of Commerce, 14th Street and Constitution Avenue, NW, Room 4823, Washington, D.C. 20230.

Other Requirements

While participating in the Technology Administration Fellows Program, Fellows must understand and promote the position of the Department and TA on matters of public policy as set by the Secretary of Commerce and the Under Secretary for Technology, when representing TA. Fellows may not engage in any outside activity, including business activity, that is incompatible with the policies and interests of the Department.

Fellows must adhere to the Department's security and clearance requirements, including: security clearances specified in Department Administrative Order 207–3, ''Security Requirements for Research Associates, Guest Workers, and Trainees;'' and Department regulations on Employee Responsibilities and Conduct, 15 CFR Part 0.

Fellows may not; obligate the expenditure of Federal funds; supervise Federal employees; speak for the Department in a public setting; nor use the name of the Technology Administration or the Department on any product or service without prior approval of the Technology Administration.

Dated: January 27, 2000.

Cheryl L. Shavers,

Under Secretary of Commerce for Technology.

[FR Doc. 00–2295 Filed 2–2–00; 8:45am]

BILLING CODE 3510–GN–M

COMMODITY FUTURES TRADING COMMISSION

Coffee, Sugar & Cocoa Exchange: Proposed Amendments to the coffee ''C'' Futures Contract Reducing the Discount Applicable to the Delivery of Peruvian Coffee, Deleting San Francisco as a Delivery Port, Changing the Requirements for Bags Containing Delivery Coffee, and Amending Coffee Sampling Procedures

AGENCY: Commodity Futures Trading Commission.

ACTION: Notice of availability of proposed amendments to contract terms and conditions.

SUMMARY: The Coffee, Sugar & Cocoa Exchange (CSCE or Exchange) has proposed amendments to the Exchange's coffee ''C'' futures contract. The proposed amendments would: reduce the discount for Peruvian coffee delivered in satisfaction of coffee ''C'' futures contracts from 400 points to 100 points (from 4 cents per pound to 1 cent per pound); delete San Francisco, California as a delivery port; establish a minimum standard weight of 700 grams per bag for bags used in packaging deliverable coffee; permit new samples of coffee to be drawn for the purpose of appealing initial grading decisions regarding the coffee based on the first sample submitted; and change the method of transmitting completed and signed sampling orders to the Exchange. The proposed amendments were submitted under the Commission's 45-day Fast Track procedure which provides that, absent any contrary action by the Commission, the proposed amendments may be deemed approved on February 28, 2000—45 days after the Commission's receipt of the proposals. The Acting Director of the Division of Economic Analysis (Division) of the Commission, acting pursuant to the authority delegated by Commission Regulation 140.96, has determined that publication is in the public interest, will assist the Commission in considering the views of interested persons, and is consistent with the purposes of the Commodity Exchange Act.

DATES: Comments must be received on or before February 18, 2000.

ADDRESSES: Interested persons should submit their views and comments to Jean A. Webb, Secretary, Commodity Futures Trading Commission, Three Lafayette Centre, 21st Street, NW Washington, DC 20581. In addition, comments may be sent by facsimile transmission to facsimile number (202) 418–5521, or by electronic mail to secretary@cftc.gov. Reference should be made to the proposed amendments to the Coffee, Sugar & Cocoa Exchange coffee ''C'' futures contract.

FOR FURTHER INFORMATION CONTACT: Please contact John Bird of the Division of Economic Analysis, Commodity Futures Trading Commission, Three Layfayette Centre, 21st Street NW, Washington, DC 20581, telephone (202) 418–5274. Facsimile number: (202) 418–5527. Electronic mail: jbird@cftc.gov

SUPPLEMENTARY INFORMATION: The coffee ''C'' futures contract currently provides for the delivery of 19 growths of coffee, including coffee produced in Peru, at CSCE-licensed warehouses in Miami, New York, New Orleans, and San Francisco. Individual coffee growths are deliverable at par or at specified premiums or discounts, with coffee of the growth of Peru presently being deliverable at a discount of 400 points (4 cents per pound). The contract currently requires that the bags in which deliverable coffee is packed must be made of sisal, henequen, jute, burlap or

woven material having similar properties, with no requirements being specified regarding the minimum weight of such bags.

The futures contract also requires that coffee intended for delivery must be sampled and graded by CSCE-licensed individuals in accordance with specified procedures and be certified as meeting the contract's quality standards. Currently, samples of coffee intended for certification must be taken by Exchange-licensed master samplers. The contract requires that, after the samples have been taken, the master sampler must return a signed and completed copy of the sampling order to the Exchange, at the time the samples are delivered to the CSCE for grading. In addition, if the samples of a coffee lot initially are found to be not deliverable or to be of lower than expected quality, the contract provides that the party seeking to have coffee certified as deliverable may resubmit the coffee samples for re-grading.

The proposed amendments will reduce to 100 points (1 cent per pound) the discount for delivery of coffee of the growth of Peru and will delete San Francisco as a delivery point. The proposed amendments also will establish a new requirement that deliverable coffee must be packed in bags that have a minimum weight of 700 grams. In regard to the contract's sampling procedures, the proposed amendments will stipulate that the master sampler must put a copy of the signed and completed sampling order into the bag containing the sample and deliver the sample to the Exchange. In addition, the proposed amendments will provide that, in the case where the owner of a given lot of coffee appeals an initial grading decision, the owner of the coffee at its own expense may elect to have a new sample of the coffee drawn and evaluated for purposes of the appeal.

The CSCE intends to apply the proposed amendment reducing the discount for delivery of Peruvian coffee to existing contract months that have no open interest and to all newly listed contract months. The proposed amendments deleting San Francisco as a delivery point and modifying the contract's sampling procedures would be made effective within 30 days of the date of the Commission's approval of the amendments with respect to all existing and newly listed contract months. The proposed amendment requiring that deliverable coffee be packed in bags weighing at least 700 grams would be made applicable to coffee certified for delivery on and after March 1, 2000.

With regard to the proposal to reduce the discount currently applicable to Peruvian coffee, the Exchange said that ''[T]he physical market currently values Peruvian coffee at par with the Coffee ''C'' contract or at a premium. * * * [H]ence the Peruvian discount * * * needed to be narrowed from its current 400 points to 100 points to reflect commercial reality.'' Concerning the proposal to delist San Francisco as a delivery port, the Exchange said that ''[O]ver the past few years, there has been almost no interest on the part of the coffee trade to make or take delivery out of the Port of San Francisco. For some time, the Exchange has had no licensed warehouses in the Port.''

In support of the proposed minimum 700-gram weight for bags used to package delivery coffee, the CSCE said that it has been made aware that Exchange coffee has been packaged in bags that easily disintegrate or breakdown and that the proposed standard would strengthen the integrity of the bags used. Regarding the proposal to permit new samples to be drawn on appeal of a coffee grading decision, the Exchange indicated that the existing rules permit appeals to be evaluated based on the original sample but do not provide for the submission of new samples of the same coffee, which may be particularly useful when the coffee has failed the contract's taste standard (sweet in the cup) or due to the presence of a few defective beans. Finally, concerning the change in sampling procedure, the Exchange said that requiring that master samplers label sample bags with a sequence number and insert the completed and signed sampling order in the sample bag would help to '' * * * avoid the appearance of a conflict of interest.''

The Commission is requesting comments on the proposed amendments. In particular, comments are requested regarding extent to which proposed 100-point discount for delivery of Peruvian coffee reflects cash market pricing relationships between the value of washed Peruvian coffee versus washed coffee of the par coffee growths (*i.e.,* coffee from Mexico, Salvador, Guatemala, Costa Rica, Nicaragua, Kenya, New Guinea, Tanzania, Uganda, and Panama). Comments also are requested regarding ordinary cash market requirements relative to the standards that bags used to package coffee must meet and the effect on the futures contract's delivery process of requiring a minimum weight per bag of 700 grams. In addition, comments are requested concerning the effect on deliverable supplies of the proposal to delete San Francisco as a delivery point and the effects, if any, on the delivery process of the proposed amendments to the contract's sampling procedures.

Copies of the proposed amendments will be available for inspection at the Office of the Secretariat, Commodity Futures Trading Commission, Three Lafayette Centre, 21st Street NW, Washington, DC 20581. Copies of the proposed amendments can be obtained through the Office of the Secretariat by mail at the above address, by phone at (202) 418–5100, or via the Internet at secretary@cftc.gov.

Other materials submitted by the Exchange in support of the proposal may be available upon request pursuant to the Freedom of Information Act (5 U.S.C. 552) and the Commission's regulations thereunder (17 CFR Part 145 (1987)), except to the extent they are entitled to confidential treatment as set forth in 17 CFR 145.5 and 145.9. Requests for copies of such materials should be made to the FOI, Privacy and Sunshine Act Compliance Staff of the Office of Secretariat at the Commission's headquarters in accordance with 17 CFR 145.7 and 145.8.

Any person interested in submitting written data, views, or arguments on the proposed amendments, or with respect to other materials submitted by the Exchange, should send such comments to Jean A. Webb, Secretary, Commodity Futures Trading Commission, Three Lafayette Centre, 21st Street NW, Washington, DC 20581 by the specified date.

Issued in Washington, DC, on January 27, 2000.

Richard Shilts,

Acting Director.

[FR Doc. 00–2332 Filed 2–02–00; 8:45 am]

BILLING CODE 6351–01–M

DEPARTMENT OF DEFENSE

Office of the Secretary

Meeting of the President's Information Technology Advisory Committee (Formerly the Presidential Advisory Committee on High Performance Computing and Communications, Information Technology, and the Next Generation Internet)

ACTION: Notice of meeting.

SUMMARY: This notice sets forth the schedule and summary agenda for the next meeting of the President's Information Technology Advisory Committee. The meeting will be open to the public. Notice of this meeting is

required under the Federal Advisory Committee Act, (Pub. L. 92–463).

DATES: February 25, 2000.

ADDRESSES: NSF Board Room (Room 1235), National Science Foundation, 4201 Wilson Boulevard, Arlington, VA 22230.

PROPOSED SCHEDULE AND AGENDA: The President's Information Technology Advisory Committee (PITAC) will meet in open session from approximately 8:30 a.m. to 12:30 p.m. and 1:30 p.m. to 4:30 p.m. on February 25, 2000. This meeting will include: (1) Updates on PITAC's next steps and panels on: learning, digital libraries; open source software; government; healthcare; the digital divide; and international issues. (2) The Federal Budget for information technology research and development in FY 2001. (3) Information technology strategies in Federal agencies.

FOR FURTHER INFORMATION: The National Coordination Office for Computing, Information, and Communications provides information about this Committee on its web site at: http://www.ccic.gov; it can also be reached at (703) 306–4722. Public seating for this meeting is limited, and is available on a first-come, first-served basis.

Dated: January 28, 2000.

L.M. Bynum,

Alternate OSD Federal Register Liaison Officer, Department of Defense.

[FR Doc. 00–2298 Filed 2–2–00; 8:45 am]

BILLING CODE 5000–10–M

DEPARTMENT OF DEFENSE

Office of the Secretary

U.S. Strategic Command Strategic Advisory Group; Meeting

AGENCY: Department of Defense, USSTRATCOM.

ACTION: Notice.

SUMMARY: The Strategic Advisory Group (SAG) will meet in closed session on April 13 and 14, 2000. The mission of the SAG is to provide timely advice on scientific, technical, and policy-related issues to the Commander in Chief, U.S. Strategic Command, during the development of the nation's strategic war plans. At this meeting, the SAG will discuss strategic issues that relate to the development of the Single Integrated Operational Plan (SIOP). Full development of the topics will require discussion of information classified TOP SECRET in accordance with Executive Order 12958, April 17, 1995. Access to this information must be strictly limited to personnel having requisite security clearances and specific need-to know. Unauthorized disclosure of the information to be discussed at the SAG meeting could have exceptionally grave impact upon national defense.

In accordance with section 10(d) of the Federal Advisory Committee Act, (5 U.S.C. App 2), it has been determined that this SAG meeting concerns matters listed in 5 USC 552b(c) and that, accordingly, this meeting will be closed to the public.

Dated: January 28, 2000.

L.M. Bynum,

Alternate OSD Federal Register Liaison Officer, Department of Defense.

[FR Doc. 00–02297 Filed 2–2–00; 8:45 am]

BILLING CODE 5001–01–M

DEPARTMENT OF DEFENSE

Department of the Navy

Notice of Intent To Grant Exclusive Patent License; Thiokol Propulsion, a Division of Cordant Technologies, Inc.

AGENCY: Department of the Navy, DOD.

ACTION: Notice.

SUMMARY: The Department of the Navy hereby gives notice of its intent to grant to Thiokol Propulsion, a Division of Cordant Technologies, Inc., a revocable, nonassignable, exclusive license in the United States, to practice the Government-owned invention described in U.S. No. 5,693,794 entitled ''Caged Polynitramine Compound.''

DATES: Anyone wishing to object to the granting of this license must file written objections along with supporting evidence, if any, not later than April 3, 2000.

ADDRESSES: Written objections are to be filed with the Office of Naval Research, ONR 00CC, Ballston Tower One, 800 North Quincy Street, Arlington, Virginia 22217–5660.

FOR FURTHER INFORMATION CONTACT: Mr. John G. Wynn, Associate Counsel Intellectual Property, Office of Naval Research, ONR 00CC, Ballston Tower One, 800 North Quincy Street, Arlington, Virginia 22217–5660, telephone (703) 696–4004, e-mail wynnj@onr.navy.mil or fax (703) 696–6909.

(Authority: 35 U. S. C. 207, 37 CFR Part 404)

Dated: January 18, 2000.

J.L. Roth,

Lieutenant Commander, Judge Advocate General's Corps, U. S. Navy, Federal Register Liaison Officer.

[FR Doc. 00–2426 Filed 2–2–00; 8:45 am]

BILLING CODE 3810–FF–P

DEPARTMENT OF EDUCATION

Notice of Proposed Information Collection Requests

AGENCY: Department of Education.

SUMMARY: The Leader, Information Management Group, Office of the Chief Information Officer, invites comments on the proposed information collection requests as required by the Paperwork Reduction Act of 1995.

DATES: Interested persons are invited to submit comments on or before April 3, 2000.

SUPPLEMENTARY INFORMATION: Section 3506 of the Paperwork Reduction Act of 1995 (44 U.S.C. Chapter 35) requires that the Office of Management and Budget (OMB) provide interested Federal agencies and the public an early opportunity to comment on information collection requests. OMB may amend or waive the requirement for public consultation to the extent that public participation in the approval process would defeat the purpose of the information collection, violate State or Federal law, or substantially interfere with any agency's ability to perform its statutory obligations. The Leader, Information Management Group, Office of the Chief Information Officer, publishes that notice containing proposed information collection requests prior to submission of these requests to OMB. Each proposed information collection, grouped by office, contains the following: (1) Type of review requested, *e.g.* new, revision, extension, existing or reinstatement; (2) Title; (3) Summary of the collection; (4) Description of the need for, and proposed use of, the information; (5) Respondents and frequency of collection; and (6) Reporting and/or Recordkeeping burden. OMB invites public comment.

The Department of Education is especially interested in public comment addressing the following issues: (1) Is this collection necessary to the proper functions of the Department; (2) Will this information be processed and used in a timely manner; (3) Is the estimate of burden accurate; (4) How might the Department enhance the quality, utility, and clarity of the information to be collected; and (5) How might the Department minimize the burden of this collection on the respondents, including through the use of information technology.

Dated: January 28, 2000.

William Burrow,

Leader, Information Management Group, Office of the Chief Information Officer.

Office of the Undersecretary

Type of Review: New.

Title: Supplemental Study of the Technology Literacy Challenge Fund (TLCF).

Frequency: One time.

Affected Public: State, Local, or Tribal Gov't, SEAs or LEAs.

Reporting and Recordkeeping Hour Burden: Responses: 636.

Burden Hours: 970.

Abstract: This study will collect and analyze information about the implementation and outcomes of the Technology Literacy Challenge Fund at the state and local levels. Drawing upon sources such as the annual state TLCF performance reports, local technology plans, and survey work, this study will produce a national representative picture of TLCF's contributions to the availability and use of technology in schools and provide information on targeting, flexibility and other key aspects of the program.

Requests for copies of the proposed information collection request may be accessed from *http://edicsweb.ed.gov,* or should be addressed to Vivian Reese, Department of Education, 400 Maryland Avenue, SW, Room 5624, Regional Office Building 3, Washington, DC 20202–4651. Requests may also be electronically mailed to the internet address OCIO__IMG__Issues@ed.gov or faxed to 202–708–9346.

Written comments or questions regarding burden and/or the collection activity requirements should be directed to Jacqueline Montague at (202) 708–5359 or via her internet address Jackie__Montague@ed.gov. Individuals who use a telecommunications device for the deaf (TDD) may call the Federal Information Relay Service (FIRS) at 1–800–877–8339.1

[FR Doc. 00–2336 Filed 2–2–00; 8:45 am]

BILLING CODE 4000–01–P

DEPARTMENT OF EDUCATION

Submission for OMB Review; Comment Request

AGENCY: Department of Education.

ACTION: Correction Notice.

SUMMARY: On January 21, 2000, a 30-day notice inviting comment from the public was published for the Reference and Reporting Guide for Preparing State and Institutional Report on Teacher Quality and Preparation in the **Federal Register** (Volume 65, Number 14) dated January 21, 2000. The Leader, Information Management Group, Office of the Chief Information Officer, hereby issues a correction notice on the submission for OMB review as required by the Paperwork Reduction Act of 1995. This correction notice extends the public comment period from February 22, 2000 to February 28, 2000.

DATES: Interested persons are invited to submit comments on or before February 28, 2000.

ADDRESSES: Written comments should be addressed to the Office of Information and Regulatory Affairs, Attention: Danny Werfel, Desk Officer, Department of Education, Office of Management and Budget, 725 17th Street, N.W., Room 10235, New Executive Office Building, Washington, DC 20503 or should be electronically mailed to the internet address *DWERFEL@OMB.EOP.GOV.*

Requests for copies of the proposed information collection request may be accessed from *http://edicsweb.ed.gov,* or should be addressed to Vivian Reese, Department of Education, 400 Maryland Avenue, SW, Room 5624, Regional Office Building 3, Washington, DC 20202–4651 or should be electronically mailed to the internet address OCIO__IMB__Issues@ed.gov, or should be faxed to 202–708–9346. Another available Web site is provided by the Office of Postsecondary Education at: http//www.ed.gov/offices/OPE/News/teacherprep/index.html.

FOR FURTHER INFORMATION CONTACT: Joseph Schubart (202) 708–9266.

Dated: January 28, 2000.

William E. Burrow,

Leader, Information Management Group, Office of the Chief Information Officer.

[FR Doc. 00–2337 Filed 2–2–00; 8:45 am]

BILLING CODE 4000–01–P

DEPARTMENT OF EDUCATION

[CFDA No. 84.031]

Strengthening Institutions, American Indian Tribally Controlled Colleges and Universities, and Alaska Native and Native Hawaiian-Serving Institutions Programs; Correction

AGENCY: Department of Education.

ACTION: Notice inviting applications for new awards for Fiscal Year 2000; Correction.

SUMMARY: On December 30, 1999, a notice was published in the **Federal Register** (64 FR 73525–73527) to invite applications for the 2000–2001 award year. This notice corrects the December 30 document.

Page 73526 is corrected as follows:

(1) Column two, line 30, ''accessed at:'' should be ''accessed beginning February 1, 2000 at:''.

(2) Column two, line 30, ''http://gapsweb.ed.gov/.'' should be ''http://e-grants.ed.gov''.

(3) Column two, line 31, add ''Note: Some of the procedures in these instructions for transmitting applications differ from those in the Education Department General Administrative Regulations (EDGAR) (34 CFR 75.102). Under the Administrative Procedure Act (5 U.S.C. 553) the Department generally offers interested parties the opportunity to comment on proposed regulations. However, these amendments make procedural changes only and do not establish new substantive policy. Therefore, under 5 U.S.C. 553(b)(A), the Secretary has determined that proposed rulemaking is not required.''.

FOR FURTHER INFORMATION CONTACT: Darlene B. Collins, U.S. Department of Education, 1990 K Street, NW, 6th floor, Washington, DC 20006–8513. Telephone: (202) 502–7777. Email: darlene__collins@ed.gov If you use a telecommunications device for the deaf (TDD), you may call the Federal Information Relay Service (FIRS) at 1–800–877–8339.

Individuals with disabilities may obtain this document in an alternate format (*e.g.,* Braille, large print, audiotape or computer diskette) on request to the contact person listed in the preceding paragraph.

Electronic Access to This Document

You may view this document, as well as all other Department of Education documents published in the **Federal Register**, in text or Adobe Portable Document Format (PDF) on the Internet at either of the following sites:

http://ocfo.ed.gov/fedreg.htm
http://www.ed.gov/news.html

To use the PDF you must have the Adobe Acrobat Reader Program with Search, which is available free at either of the previous sites. If you have questions about using the PDF, call the U.S. Government Printing Office (GPO), toll free at 1–888–293–6498; or in the Washington, DC, area at (202) 512–1530.

Note: The official version of this document is the document published in the **Federal Register**. Free Internet access to the official edition of the **Federal Register** and the Code of Federal Regulations is available on GPO access at: http://www.access.gpo.gov/nara/index.html

Dated: January 28, 2000.

A. Lee Fritschler,

Assistant Secretary, Office of Postsecondary Education.

[FR Doc. 00–2355 Filed 2–2–00; 8:45 am]

BILLING CODE 4000–01–P

DEPARTMENT OF EDUCATION

[CFDA No.: 84.334]

Gaining Early Awareness and Readiness for Undergraduate Programs (GEAR UP)

AGENCY: Office of Postsecondary Education, Department of Education.

ACTION: Notice of Pre-Application Technical Assistance Workshops.

SUMMARY: The Department of Education, through the National Council for Community and Education Partnerships (NCCEP), has scheduled five regional technical assistance workshops between February 7, 2000 and February 22, 2000 to help prospective applicants better understand the Department's approach to implementing the competitive grant process to be held in spring 2000 under the Gaining Early Awareness and Readiness for Undergraduate Programs (GEAR UP) Grant Program, authorized by Title IV, Part A, subpart 2, chapter 2 of the Higher Education Act of 1965, as amended.

Available Guidelines: You may download a draft of the application guidelines from the program web site at http://www.ed.gov/gearup/ or by contacting the GEAR UP Program Office at(202) 502–7676 or e-mail at gearup@ed.gov.

SUPPLEMENTARY INFORMATION: At these workshops, the public will learn more about the purposes and requirements of this program, how to apply for funds, program eligibility requirements, the application selection process, and considerations that might help them to improve the quality of their grant applications. In addition, the importance of making data collection and assessment as a part of their program practice will also be discussed. Persons with expertise on these and other issues related to the GEAR UP Program will be available to answer any questions on these topics.

Date of Technical Assistance Workshops: The workshops are scheduled to be held in:

1. *Phoenix, AZ:* February 7, 2000; Wyndham Garden Hotel, North Phoenix; 2641 W. Union Hills Drive; Phoenix, AZ 20001. Contact Person: James Davis, (202) 502–7676.

2. *Kansas City, MO:* February 9, 2000; Hyatt Regency Crown Center; 2345 McGee; Kansas City, MO 64108. Contact Person: Steve Silver, (202) 502–7676.

3. *Jackson, MS:* February 16, 2000; Ramada Inn Southwest Conference Center; 1525 Ellis Avenue; Jackson, MS 39204. Contact Person: Walter Howell, (202) 502–7676.

4. *Washington, DC:* February 18, 2000; Hyatt Regency on Capitol Hill; 400 New Jersey Ave., NW; Washington, DC 20001. Contact Person: Kelcey Klass, (202) 502–7676.

5. *Edinburg, TX:* February 22, 2000; Holiday Inn; 1806 South Closner Blvd.; Edinburg, TX 78539. Contact Person: Sylvia Ross, (202) 502–7676.

Any interested parties are invited to attend these workshops.

Assistance to Individuals With Disabilities at the Technical Assistance Workshops

The technical assistance workshop sites are accessible to individuals with disabilities. The Department will provide a sign language interpreter at each of the scheduled workshops. If you will need an auxiliary aid or service to participate in the workshop (*e.g.* interpreting service, assistive listening device, or materials in an alternate format), notify the contact person listed for the workshop at least two weeks before the scheduled workshop date. Although we will attempt to meet a request received after that date, we may not be able to make available the requested auxiliary aid or service because of insufficient time to arrange it.

For Additional Workshop Information: You may contact the person mentioned as contact for each workshop site listed.

Participants should register for these workshops online at http://www.edpartnerships.org or by completing the copy of the registration form appended to this notice and faxing the completed form to the attention of Adella Santos at (202) 530–0809.

FOR FURTHER INFORMATION CONTACT: Gear up Program Office; Department of Education, Office of Postsecondary Education; 1990 K Street, NW; Washington, DC 20006. Inquiries may be sent by e-mail to gearup@ed.gov (please type in the subject line: PRE-APPLICATION WORKSHOP) or by fax to: (202) 502–7675.

Individuals with disabilities may obtain this document in an alternate format (*e.g.,* Braille, large print, audiotape, or computer diskette) on request to the contact person listed in the preceding paragraph.

Electronic Access to This Document

You may view this document, as well as all other Department of Education documents published in the **Federal Register**, in text or Adobe Portable Document Format (PDF) on the Internet at either of the following sites: http://ocfo.ed.gov/fedreg.htm, http://www.ed.gov/news.html

To use the PDF you must have the Adobe Acrobat Reader Program with Search, which is available free at either of the previous sites. If you have questions about using the PDF, call the U.S. Government Printing Office (GPO), toll free, at 1–888–293–6498; or in Washington, D.C., area at (202) 512–1530.

Note: The official version of this document is the document published in the **Federal Register**. Free Internet access to the official edition of the **Federal Register** and the Code of Federal Regulations is available on GPO Access at: http://www.access.gpo.gov/nara/index.html

Dated: January 28, 2000.

A. Lee Fritschler,

Assistant Secretary for Postsecondary Education.

BILLING CODE 4000–01–U

Pre-Application Technical Assistance Workshops
Registration Form

I am registering to attend the following workshop as one member of a _____
(Number of Persons)
person team representing _____
(Identify Institution Likely to Serve as the Fiscal Agent)

1. Workshop Dates (Please select one):

❒ February 7, 2000 – Phoenix, AZ
Registration Deadline: January 31, 2000

❒ February 9, 2000 – Kansas City, MO
Registration Deadline: January 31, 2000

❒ February 16, 2000 – Jackson, MS
Registration Deadline: January 31, 2000

❒ February 18, 2000 – Washington, DC
Registration Deadline: January 31, 2000

❒ February 22, 2000 – Edinburg, TX
Registration Deadline: January 31, 2000

2. Contact Information:

Internet e-mail address: _____
Note: Confirmation for your registration will be sent via e-mail.

First Name: _____ Last Name: _____
Title: _____
Institution: _____
Address: _____
_____
City: _____ State: _____ Zip Code: _____
Telephone: _____ Fax: _____

Please identify your personal communications preference: ❒ Regular Mail ❒ Fax ❒ E-Mail

Do you require special accommodations? ❒ No ❒ Yes (If yes, please state your needs below)

For more information or inquiries about the workshops please contact:

National Council for Community & Education Partnerships
One Dupont Circle, NW., Suite 118
Washington, DC 20036
Telephone: 202/939-9450
Fax: 202/530-0809
E-Mail: gearup@nccep.nche.edu
Website: www.edpartnerships.org

Travel and lodging related costs are to be incurred by the participant(s). For lodging reservations, please contact the hotel corresponding to the location that you selected. When making your reservation, identify yourself as part of the NCCEP group attending a GEAR-UP workshop in order to receive the special room rate.

February 7, 2000 Phoenix, AZ	February 9, 2000 Kansas City, MO	February 16, 2000 Jackson, MS	February 18, 2000 Washington, DC	February 22, 2000 Edinburg, TX
Hotel: Wyndham Garden Hotel North Phoenix **Address**: 2641 West Union Hills Drive, Phoenix, AZ 20001 **Tel**: 602/978-2222 **Fax**: 602/978-9139 **Rate**: $89.00* single/double *plus tax **Deadline**: 1/21/2000	**Hotel**: Hyatt Regency Crown Center **Address**: 2345 McGee, Kansas City, MO 64108 **Tel**: 816/421-1234 **Fax**: 816/435-4190 **Rate**: $108.00* single - $133.00* double *plus tax **Deadline**: 1/21/2000	**Hotel**: Ramada Inn South- West Conference Center **Address**: 1525 Ellis Avenue Jackson, MS 39204 **Tel**: 601/944-1150 **Fax**: 601/355-3602 **Rate**: $45.00* single/ double *plus tax **Deadline**: 1/14/2000	**Hotel**: Hyatt Regency Washington DC on Capitol Hill **Address**: 400 New Jersey Ave. NW Washington, DC 20001 **Tel**: 202/737-1234 **Fax**: 202/393-7927 **Rate**: $139.00* single/double *plus tax **Deadline**: 1/17/2000	**Hotel**: Holiday Inn **Address**: 1806 South Closner Boulevard Edinburg, TX 78539 **Tel**: 956/383-8800 **Fax**: 956/383-1540 **Rate**: $60.00* single/double *plus tax **Deadline**: 1/21/2000
Workshop to be held at Arizona State Univer-sity –West Campus	*RCI shuttle service to hotel – $20 roundtrip.*	Workshop to be held at Jackson State University.	*Six miles from Reagan Washington National Airport.*	Workshop to be held at University of Texas – Pan American
20 miles from Sky Harbor International Airport.		*Ten miles from Jackson International Airport.*		*20 miles from McAllen Airport.*

Reduced Airfare: American Airlines has been designated as the official airline for these workshops. They will offer attendees zone fares and/or special discounts off the lowest published American Airline round-trip fare. To obtain the discount rate, call 800/433-1790 and refer to STAR File #672OUU.

[FR Doc. 00–2354 Filed 2–2–00; 8:45 am]

BILLING CODE 4000–01–C

DEPARTMENT OF ENERGY

Federal Energy Regulatory Commission

[Docket No. RP00–30–000]

ANR Pipeline Company; Notice of Technical Conference

January 28, 2000.

Take notice that a technical conference will be held on Tuesday, February 8, 2000, at 10:00 a.m., in a room to be designated at the offices of the Federal Energy Regulatory Commission, 888 First Street, NE, Washington, DC 20426.

All interested parties and Staff are permitted to attend.

David P. Boergers,

Secretary.

[FR Doc. 00–2373 Filed 2–2–00; 8:45 am]

BILLING CODE 6717–01–M

DEPARTMENT OF ENERGY

Federal Energy Regulatory Commission

[Docket Nos. OR98–1–000, OR96–2–000, and OR06–10–000]

ARCO Products Company, a Division of Atlantic Richfield Company, Equilon Enterprises L.L.C., Mobil Oil Corporation, and Texaco Refining and Marketing, Inc., Complainants v. SFPP, L.P., Respondent; Notice of Second Amended Complaint, and Third Original Complaint Against SFPP, L.P.

January 28, 2000.

Take notice that on January 10, 2000, ARCO Products Company, a Division of Atlantic Richfield Company, Equilon Enterprises, LLC, a successor in interest to Texaco Refining and Marketing, Inc., and Mobile Oil Corporation (Complainants) tendered for filing a complaint alleging that there are reasonable grounds to believe that all of the rates of SFPP. LP. subject to the jurisdiction of the Commission and not just and reasonable. According to Complainants, the overcharges are 40% of the current cost of service and revenue requirements, or a minimum of $75,000.000 a year.

Complainants further allege that, to the extent any of the rates are subject to a threshold ''changed circumstances standard'' pursuant to the EP Act of 1992, this threshold is met.

Complainants allege they are aggrieved and damaged by the unlawful acts of SFPP, L.P. and seek relief in the form of reduced rates in the future and reparations for past and current overcharges, with interest.

This complaint incorporates, and constitutes, a second amendment to the Second Amended Compliant filed this same day in related dockets that the Commission has heretofore held in abeyance, the same being Docket Nos. OR98–1–000, OR96–2–000, and OR96–10–000.

SFPP's motion for a further extension of time filed on January 24, 2000 is denied.

Any person desiring to be heard or to protest said complaint should file a motion to intervene or a protest with the Federal Energy Regulatory Commission, 888 First Street, N.E., Washington, D.C. 20426, in accordance with Rules 214 and 211 of the Commission's Rules of Practice and Procedure 18 CFR 385.214, 385.211. All such motions or protests should be filed on or before February 14, 2000. Protests will be considered by the Commission in determining the appropriate action to be taken, but will not serve to make protestants parties to the proceeding. Any person wishing to become a party must file a motion to intervene. Copies of this filing are on file with the Commission and are available for public inspection. This filing may be viewed on the web at http://www/ferc/fed.us/online/rims.htm (call 202–208–2222 for assistance).

Answers to this complaint shall be due on or before February 14, 2000.

David P. Boergers,

Secretary.

[FR Doc. 00–2368 Filed 2–2–00; 8:45 am]

BILLING CODE 6717–01–M

DEPARTMENT OF ENERGY

Federal Energy Regulatory Commission

[Docket No. RP00–168–000]

Northwest Pipeline Corporation v. El Paso Natural Gas Company; Notice of Complaint

January 28, 2000.

Take notice that on January 27, 2000, Northwest Pipeline Corporation (Northwest) filed a complaint against EL Paso Natural Gas Company (El Paso) pursuant to 18 CFR 206. Northwest asserts that El Paso is violating GISB standards 1.3.2 and 1.3.22 by failing to adhere to the confirmation deadlines and confirmation quantities set forth therein. Northwest claims that El Paso's failure results in scheduled quantity differences between the pipelines at the interconnect point. Northwest has been unsuccessful in trying to get EL Paso to comply and requests that the Commission order El Paso to adhere to, and to determine scheduled quantities for the period dating back to June 1, 1999 in accordance with, the GISB standards.

Any person desiring to be heard or to protest this filing should file a motion to intervene or protest with the Federal Energy Regulatory Commission, 888 First Street, N.E., Washington, D.C. 20426, in accordance with Rules 211 and 214 of the Commission's Rules of Practice and Procedure (18 CFR 385.211 and 385.214). All such motions or protests must be filed on or before February 16, 2000. Protests will be considered by the Commission in determining the appropriate action to be taken, but will not serve to make protestants parties to the proceeding. Any person wishing to become a party must file a motion to intervene. Copies of this filing are on file with the Commission and are available for public inspection in the Public Reference Room. This filing may also be viewed on the Internet at http://www.fed.us/online/rims.htm (call 202–208–2222) for assistance. Answers to the complaint shall also be due on or before Febuary 16, 2000.

David P. Boergers,

Secretary.

[FR Doc. 00–2374 Filed 2–2–00; 8:45 am]

BILLING CODE 6717–01–M

DEPARTMENT OF ENERGY

Federal Energy Regulatory Commission

[Docket Nos. OR98–13–000 and OR98–1–000]

Tosco Corporation, Complainant v. SFPP, L.P., Respondent, Notice of Amended Compliant

January 28, 2000.

Take notice that on January 10, 2000, pursuant to Rule 206 of the Commission's Rules of Practice and Procedure (18 CFR 385.206), the Procedural Rules Applicable to Oil Pipeline Proceedings (18 CFR 343.1(a)), and the Commission's Order Establishing Further Procedures issued in these dockets on January 13, 1999, Tosco Corporation (Tosco) hereby submits its amended complaint in this proceeding. This amended complaint modifies and supersedes the original complaint filed herein by Tosco on April 24, 1998.

Tosco respectfully requests that the Commission: (1) Examine the rates and charges collected by SFPP for its jurisdictional interstate service; (2) order refunds to Tosco, including appropriate interest thereon, for the applicable reparation period to the extent the Commission finds that such rates or charges were unlawful; (3) determine just, reasonable, and nondiscriminatory rates for SFPP's jurisdictional interstate service; (4) award Tosco reasonable attorney's fees and costs; and (5) order such relief as may be appropriate.

SFPP's motion for a further extension of time filed on January 24, 2000 is denied.

Any person desiring to be heard or to protest said complaint should file a motion to intervene or a protest with the Federal Energy Regulatory Commission, 888 First Street, N.E., Washington, DC 20426, in accordance with Rules 214 and 211 of the Commission's Rules of Practice and Procedure 18 CFR 385.214, 385.211. All such motions or protests should be filed on or before February 14, 2000. Protests will be considered by the Commission in determining the appropriate action to be taken, but will not serve to make protestants parties to the proceeding. Any person wishing to become a party must file a motion to intervene. Copies of this filing are on file with the Commission and are available for public inspection. This filing may be viewed on the web at http://www.ferc.fed.us/online/rims.htm (call 202–208–2222 for assistance). Answers to this complaint shall be due on or before February 14, 2000.

David P. Boergers,

Secretary.

[FR Doc. 00–2369 Filed 2–2–00; 8:45 am]

BILLING CODE 6717–01–M

DEPARTMENT OF ENERGY

Federal Energy Regulatory Commission

[Docket Nos. OR96–15–000; OR98–1–000; OR98–2–000 (Consolidated)]

Ultramar Inc., Complainant v. SFPP, L.P. Respondent, ARCO Products Company, a Division of Atlantic Richfield Company; Texaco Refining and Marketing, Inc.; Mobil Oil Corporation, Complainants v. SFPP, L.P. and Ultramar Diamond Shamrock Corporation, Complainant v. SFPP, L.P. Respondent; Notice of Amended Complaint

January 28, 2000.

Take notice that on January 10, 2000, pursuant to Rule 206 of the Commission's Rules of Practice and Procedure (18 CFR 385.206), the Procedural Rules Applicable to Oil Pipeline Proceedings (18 CFR 343.1(a)), and the Commission's Order Establishing Further procedures issued in these dockets on January 13, 1999, Ultramar Diamond Shamrock Corporation and Ultramar Inc. (Ultramar) tendered for filing their amended complaint in the captioned proceedings. This amended complaint modifies and supplements the original complaints filed in these matters by Ultramar in Docket Nos. OR96–15–000 and OR98–2–000 on August 30, 1996 and November 21, 1997 respectively.

On August 30, 1996, Ultramar Inc. filed a complaint against SFPP, in Docket No. OR96–15, asserting that SFPP had violated the Interstate Commerce Act (ICA) by failing to file an interstate tariff for the Watson enhancement facilities (Drain Dry facilities) and that, generally, the rate for the same was and continues to be unjust and unreasonable and without basis.

Ultramar respectfully requests that the Commission: (1) Examine the challenged rates and charges collected by SFPP for its jurisdictional interstate service; (2) order refunds to Ultramar,

including appropriate interest thereon, for the applicable reparation periods to the extent the Commission finds that such rates or charges were unlawful; (3) determine just, reasonable, and nondiscriminatory rates for SFPP's jurisdictional interstate service; (4) award Ultramar reasonable attorney's fees and costs; and (5) order such other relief as may be appropriate.

SFPP's motion for a further extension of time file on January 24, 2000 is denied.

Any person desiring to be heard or to protest the amended complaint should file a motion to intervene or a protest with the Federal Energy Regulatory Commission, 888 First Street, N.E., Washington, D.C. 20426, in accordance with Rules 214 and 211 of the Commission's Rules of Practice and Procedure 18 CFR 385.214, 385.211. All such motions or protests should be filed on or before February 14, 2000. Protests will be considered by the Commission in determining the appropriate action to be taken, but will not serve to make protestants parties to the proceeding. Any person wishing to become a party must file a motion to intervene. Copies of this filing are on file with the Commission and are available for public inspection. This filing may be viewed on the web at http://www.ferc.fed.us/online/rims.htm (call 202–208–2222 for assistance). Answers to this amended complaint shall be due on or before February 14, 2000.

David P. Boergers,

Secretary.

[FR Doc. 00–2370 Filed 2–2–00; 8:45 am]

BILLING CODE 6717–01–M

DEPARTMENT OF ENERGY

Federal Energy Regulatory Commission

[Docket Nos. OR96–15–000 and OR97–2–000]

Ultramar Inc., Complainant v. SFPP, L.P., Respondent, and Ultramar Inc., Complainant v. SFPP, L.P., Respondent; Notice of Amended Complaint

January 28, 2000.

Take notice that on January 10, 2000, pursuant to Rule 206 of the Commission's Rules of Practice and Procedure (18 CFR 385.206), the Procedural Rules Applicable to Oil Pipeline Proceedings (18 CFR 343.1(a)), and the Commission's Order Establishing Further Procedures issued in these dockets on January 13, 1999, Ultramar Diamond Shamrock Corporation and Ultramar Inc. (Ultramar) tendered for filing their amended complaint in the captioned proceedings. This amended complaint modifies and supplements the original complaints filed in these matters by Ultramar in Docket Nos. OR96–15–000 and OR98–2–000 on August 30, 1996 and October 21, 1996 respectively.

On August 30, 1996, Ultramar Inc. filed a complaint against SFPP, in Docket No. OR96–15, asserting that SFPP had violated the Interstate Commerce Act (ICA) by failing to file an interstate tariff for the Watson enhancement facilities (Drain Dry facilities) and that, generally, the rate for the same was and continues to be unjust and unreasonable and without basis.

Ultramar respectfully requests that the Commission: (1) examine the challenged rates and charges collected by SFPP for its jurisdictional interstate service; (2) order refunds to Ultramar, including appropriate interest thereon, for the applicable reparation periods to the extent the Commission finds that such rates or charges were unlawful; (3) determine just, reasonable, and nondiscriminatory rates for SFPP's jurisdictional interstate service; (4) award Ultramar reasonable attorney's fees and costs; and (5) order such other relief as may be appropriate.

SFPP's motion for a further extension of time filed on January 24, 2000 is denied.

Any person desiring to be heard or protest the amended complaint should file a motion to intervene or a protest with the Federal Energy Regulatory Commission, 888 First Street, NE, Washington, DC 20426, in accordance with Rules 214 and 211 of the Commission's Rules of Practice and Procedure 18 CFR 385.214, 385.211. All such motions or protests should be filed on or before February 14, 2000. Protests will be considered by the Commission in determining the appropriate action to be taken, but will not serve to make protestants parties to the proceeding. Any person wishing to become a party must file a motion to intervene. Copies of this filing are on file with the Commission and are available for public inspection. This filing may be viewed on the web at http://www.ferc.fed.us/online/rims.htm (call 202–208–2222 for assistance). Answers to this amended complaint shall be due on or before February 14, 2000.

David P. Boergers,

Secretary.

[FR Doc. 00–2371 Filed 2–2–00; 8:45 am]

BILLING CODE 6717–01–M

DEPARTMENT OF ENERGY

Federal Energy Regulatory Commission

[Docket No. EG00–79–000, et al.]

West Fork Land Development Company, L.L.C., et al.; Electric Rate and Corporate Regulation Filings

January 24, 2000.

Take notice that the following filings have been made with the Commission:

1. West Fork Land Development Company, L.L.C.

[Docket No. EG00–79–000]

Take notice that on January 18, 2000, West Fork Land Development Company, L.L.C. (West Fork), tendered for filing with the Federal Energy Regulatory Commission (Commission) an application for determination of exempt wholesale generator status pursuant to Part 365 of the Commission's Regulations.

West Fork is a Delaware limited liability company and a wholly-owned subsidiary of Enron North America Corp. West Fork's facility will be a natural gas-fired, single cycle generating facility with a combined generating capacity of approximately 575 MW (winter rating). Commercial operations are expected to commence in May 2000.

West Fork further states that copies of the application were served upon the Securities and Exchange Commission and the Indiana Utility Regulatory Commission.

Comment date: February 7, 2000, in accordance with Standard Paragraph E at the end of this notice. The Commission will limit its consideration of comments to those that concern the adequacy or accuracy of the application.

2. Des Plaines Green Land Development, L.L.C.

[Docket No. EG00–80–000]

Take notice that on January 18, 2000, Des Plaines Green Land Development, L.L.C. (Des Plaines Green Land), tendered for filing filed with the Federal Energy Regulatory Commission (Commission) an application for determination of exempt wholesale generator status pursuant to Part 365 of the Commission's Regulations.

Des Plaines Green Land is a Delaware limited liability company and a wholly-owned subsidiary of Enron North America Corp. Des Plaines Green Land's facility will be a natural gas-fired, single cycle generating facility with a combined generating capacity of approximately 700 MW (winter rating). Commercial operations are expected to commence in June 2000.

Des Plaines Green Land further states that copies of the application were served upon the Securities and Exchange Commission and the Illinois Commerce Commission.

Comment date: February 7, 2000, in accordance with Standard Paragraph E at the end of this notice. The Commission will limit its consideration of comments to those that concern the adequacy or accuracy of the application.

3. Gleason Power I, L.L.C.

[Docket No. EG00–81–000]

Take notice that on January 18, 2000, Gleason Power I, L.L.C. (Gleason Power), filed with the Federal Energy Regulatory Commission (Commission) an application for determination of exempt wholesale generator status pursuant to Part 365 of the Commission's Regulations.

Gleason Power is a Delaware limited liability company and a wholly-owned subsidiary of Enron North America Corp. Gleason Power's facility will be a natural gas-fired, single cycle generating facility with a combined generating capacity of approximately 585 MW (winter rating). Commercial operations are expected to commence in May 2000.

Gleason Power further states that copies of the application were served upon the Securities and Exchange Commission and the Tennessee Regulatory Authority.

Comment date: February 7, 2000, in accordance with Standard Paragraph E at the end of this notice. The Commission will limit its consideration of comments to those that concern the adequacy or accuracy of the application.

4. Pan American Energy LLC

[Docket No. EG00–82–000]

Take notice that on January 19, 2000, Pan American Energy LLC, a Delaware limited liability company, with offices at Av. Leandro N. Alem 1180, Buenos Aires, 1001, Argentina, (the Applicant), filed with the Federal Energy Regulatory Commission an application for determination of exempt wholesale generator (EWG) status pursuant to Part 365 of the Commission's Regulations.

The Applicant will be engaged indirectly, through an affiliate as defined in Section 2(a)(11)(B) of the Public Utility Holding Company Act of 1935 (PUHCA), in owning and operating eligible facilities constructed in Argentina: the 77 MW Central Termica Patagonia power plant located near Comodoro Rivadavia, Argentina, consisting of two General Electric Frame-6 simple cycle gas turbine-generator sets and associated equipment and real estate. The turbines are natural gas-fired only.

Comment date: February 8, 2000, in accordance with Standard Paragraph E at the end of this notice.

5. Pan American Energy LLC

[Docket No. EG00–83–000]

Take notice that on January 19, 2000, Pan American Energy LLC, a Delaware limited liability company, with offices at Av. Leandro N. Alem 1180, Buenos Aires, 1001, ARGENTINA (the Applicant), filed with the Federal Energy Regulatory Commission an application for determination of exempt wholesale generator (EWG) status pursuant to Part 365 of the Commission's Regulations.

The Applicant will be engaged indirectly, through an affiliate as defined in Section 2(a)(11)(B) of the Public Utility Holding Company Act of 1935 (PUHCA), in owning and operating eligible facilities constructed in Argentina: the 774.5 MW Dock Sud power plant located near the Greater Buenos Aires Area, Argentina, consisting of two ABB GT–26 combined cycle combustion turbines, 2 Babcock Wilcox heat recovery boilers, and one ABB steam turbine sub-station, and associated equipment and real estate, all of which will be an eligible facility. The turbines will be natural gas-fired only.

Comment date: February 8, 2000, in accordance with Standard Paragraph E at the end of this notice.

6. Atlantic City Electric Company, Camden Cogen, L.P., et al.

[Docket No. EL00–36–000]

Take notice that on January 21, 2000, Atlantic City Electric Company, Camden Cogen, L.P., Delmarva Power & Light Company, Edison Mission Marketing & Trading, Inc., Electric Power Supply Association, FPL Energy, Inc., New Energy Inc., Old Dominion Electric Cooperative, PECO Energy Company, PG&E Energy Trading-Power, L.P., PG&E Generating Company, Sithe Power Marketing, L.P., Strategic Energy L.L.C., Virginia Electric and Power Company, Williams Energy Marketing and Trading Company, WPS Energy Services, Inc., (together, the Complainants), tendered for filing a complaint against PJM Interconnection, L.L.C. for attempting to eliminate certain payments for Operating Reserves without a FERC rate filing.

Comment date: January 31, 2000, in accordance with Standard Paragraph E at the end of this notice. Answers to the complaint shall also be due on or before January 31, 2000.

7. New England Power Pool

[Docket No. ER99–2335–000]

Take notice that on January 19, 2000, the New England Power Pool (NEPOOL) Participants Committee tendered for filing additional information to its December 30, 1999, filing identifying the status of its efforts to develop a Congestion Management System and Multi-Settlement System. This supplemental information provides an update.

The NEPOOL Participants Committee states that copies of these materials were sent to all entities on the service lists in the above-captioned docket, to the Participants in the New England Power Pool, and to the New England state governors and regulatory commissions.

Comment date: February 8, 2000, in accordance with Standard Paragraph E at the end of this notice.

8. Atlantic City Electric Company, and Baltimore Gas & Electric Company, et al.

[Docket No. ER00–638–000]

Take notice that on January 19, 2000, Atlantic City Electric Company, Baltimore Gas & Electric Company, Delmarva Power & Light Company, Metropolitan Edison Company, PP&L, Inc., PECO Energy Company, UGI Utilities, Inc., Potomac Electric Power Company and Public Service Electric and Gas Company (together, the Conemaugh Switching Station Owners), tendered for filing an amendment to their November 23, 1999 filing in this docket.

Comment date: February 8, 2000, in accordance with Standard Paragraph E at the end of this notice.

9. Pennsylvania Electric Company

[Docket No. ER00–639–000]

Take notice that on January 19, 2000, Pennsylvania Electric Company (doing business as GPU Energy) tendered for filing an amendment to its November 23, 1999 filing in this docket.

Comment date: February 8, 2000, in accordance with Standard Paragraph E at the end of this notice.

10. Gleason Power I, L.L.C.

[Docket No. ER00–1139–000]

Take notice that on January 18, 2000, Gleason Power I, L.L.C. (Gleason Power), tendered for filing an application for waivers and blanket approvals under various regulations of the Commission and for an order accepting Gleason Power's FERC Electric Rate Schedule No. 1 to be effective on March 15, 2000.

Gleason Power intends to engage in electric power and energy transactions

as a marketer and a broker. In transactions where Gleason Power sells electric energy, it proposes to make such sales on rates, terms and conditions to be mutually agreed to with the purchasing party.

Comment date: February 7, 2000, in accordance with Standard Paragraph E at the end of this notice.

11. Des Plaines Green Land Development, L.L.C.

[Docket No. ER00–1140–000]

Take notice that on January 18, 2000, Des Plaines Green Land Development, L.L.C. (Des Plaines Green Land), tendered for filing an application for waivers and blanket approvals under various regulations of the Commission and for an order accepting Des Plaines Green Land's FERC Electric Rate Schedule No. 1 to be effective on March 15, 2000.

Des Plaines Green Land intends to engage in electric power and energy transactions as a marketer and a broker. In transactions where Des Plaines Green Land sells electric energy, it proposes to make such sales on rates, terms and conditions to be mutually agreed to with the purchasing party.

Comment date: February 7, 2000, in accordance with Standard Paragraph E at the end of this notice.

12. West Fork Land Development Company, L.L.C.

[Docket No. ER00–1141–000]

Take notice that on January 18, 2000, West Fork Land Development Company, L.L.C. (West Fork), tendered for filing an application for waivers and blanket approvals under various regulations of the Commission and for an order accepting West Fork's FERC Electric Rate Schedule No. 1, to be effective on March 15, 2000.

West Fork intends to engage in electric power and energy transactions as a marketer and a broker. In transactions where West Fork sells electric energy, it proposes to make such sales on rates, terms and conditions to be mutually agreed to with the purchasing party.

Comment date: February 7, 2000, in accordance with Standard Paragraph E at the end of this notice.

13. Ameren Services Company

[Docket No. ER00–1144–000]

Take notice that on January 19, 2000, Ameren Services Company (AMS) tendered for filing an Interconnection Agreement between AMS and Soyland Power Cooperative, Inc. (Soyland). AMS asserts that the purpose of the Agreement is to, among other things, establish the rights and obligations of Soyland, the point of interconnection and Irrevocable Letter of Credit.

Comment date: February 8, 2000, in accordance with Standard Paragraph E at the end of this notice.

14. Ameren Services Company

[Docket No. ER00–1145–000]

Take notice that on January 19, 2000, Ameren Services Company (AMS) tendered for filing an Interconnection Agreement between AMS and Southwestern Electric Cooperative, Inc. (Southwestern). AMS asserts that the purpose of the Agreement is to, among other things, establish the rights and obligations of Southwestern, the point of interconnection and Irrevocable Letter of Credit.

Comment date: February 8, 2000, in accordance with Standard Paragraph E at the end of this notice.

15. New York State Electric & Gas Corporation

[Docket No. ER00–1146–000]

Take notice that on January 19, 2000, New York State Electric & Gas Corporation (NYSEG) tendered for filing pursuant to Section 35.15 of the Commission's Regulations, 18 CFR 35.15, a Notice of Cancellation of inactive rate schedules between NYSEG and Central Maine Power Company (CMP), DuPont Power Marketing Inc. (DuPont), EnerZ Corporation (EnerZ), Ensearch Energy Service (New York) (Ensearch), Equitable Power Services Company (Equitable), MidCon Power Services Corp. (MidCon), New England Power Company (NEPCo), North American Energy Conservation, Inc. (NAEC), and Virginia Electric and Power Company (VEPCo). NYSEG requests that the Notice of Cancellation be deemed effective as of January 20, 2000. To the extent required to give effect to the Notice of Cancellation, NYSEG requests waiver of the notice requirements pursuant to Section 35.15 of the Commission's Regulations, 18 CFR 35.15.

NYSEG served copies of the filing upon the New York State Public Service Commission, CMP, DuPont, EnerZ, Ensearch, Equitable, MidCon, NEPCo, NAEC, and VEPCo.

Comment date: February 8, 2000, in accordance with Standard Paragraph E at the end of this notice.

16. AES Londonderry, LLC

[Docket No. ER00–1147–000]

Take notice that on January 19, 2000, AES Londonderry, LLC (AES Londonderry), tendered for filing an initial rate schedule and request for certain waivers and authorizations pursuant to Section 35.12 of the regulations of the Federal Energy Regulatory Commission (the Commission). The initial rate schedule provides for the sale to wholesale purchasers at market-based rates of the output of an electric power generation facility under development by AES Londonderry in Londonderry, Rockingham County, New Hampshire (the Facility). AES Londonderry requests that the Commission promptly accept the rate schedule for filing, without suspension, investigation or refund liability, and make the rate schedule effective as of the date that service commences at the Facility.

A copy of the filing was served upon the New Hampshire Public Utilities Commission.

Comment date: February 8, 2000, in accordance with Standard Paragraph E at the end of this notice.

17. Cinergy Services, Inc.

[Docket No. ER00–1148–000]

Take notice that on January 19, 2000, Cinergy Services, Inc., collectively as agent for and on behalf of its utility operating company affiliates, The Cincinnati Gas & Electric Company and PSI Energy, Inc. (Cinergy), tendered for filing a service agreement under Cinergy's Resale, Assignment or Transfer of Transmission Rights and Ancillary Service Rights Tariff (the Tariff) entered into between Cinergy and DTE Energy Trading, Inc., (DTE ET).

Cinergy and DTE ET are requesting an effective date of January 1, 2000.

Comment date: February 8, 2000, in accordance with Standard Paragraph E at the end of this notice.

18. Allegheny Energy Service Corporation, on behalf of Monongahela Power Company, et. al.

[Docket No. ER00–1149–000]

Take notice that on January 19, 2000, Allegheny Energy Service Corporation on behalf of Monongahela Power Company, The Potomac Edison Company and West Penn Power Company (Allegheny Power), tendered for filing Supplement No. 69 to add Engage Energy US, L.P., to Allegheny Power Open Access Transmission Service Tariff which has been accepted for filing by the Federal Energy Regulatory Commission in Docket No. ER96–58–000.

The proposed effective date under the Service Agreement is January 18, 2000 or a date ordered by the Commission.

Copies of the filing have been provided to the Public Utilities Commission of Ohio, the Pennsylvania

Public Utility Commission, the Maryland Public Service Commission, the Virginia State Corporation Commission, and the West Virginia Public Service Commission.

Comment date: February 8, 2000, in accordance with Standard Paragraph E at the end of this notice.

19. Allegheny Energy Service Corporation on behalf of Allegheny Energy Supply Company, LLC

[Docket No. ER00–1150–000]

Take notice that on January 19, 2000, Allegheny Energy Service Corporation on behalf of Allegheny Energy Supply Company, LLC (Allegheny Energy Supply), tendered for filing Supplement No. 17 to add one (1) new Customer (Nicole Energy Services, Inc.) to the Market Rate Tariff under which Allegheny Energy Supply offers generation services.

Allegheny Energy Supply requests a waiver of notice requirements to make service available as of December 29, 1999 to Nicole Energy Services, Inc.

Copies of the filing have been provided to the Public Utilities Commission of Ohio, the Pennsylvania Public Utility Commission, the Maryland Public Service Commission, the Virginia State Corporation Commission, the West Virginia Public Service Commission, and all parties of record.

Comment date: February 8, 2000, in accordance with Standard Paragraph E at the end of this notice.

20. Northeast Utilities Service Company

[Docket Nos. ER95–1686–006, ER96–496–008, ER97–1359–000, OA97–300–000, ER98–4604–000]

Take notice that on January 14, 2000, Northeast Utilities Service Company (NUSCO), tendered for filing revisions to the Northeast Utilities System Companies Open Access Transmission Service Tariff No. 9 and Supplements 1 and 2 to that tariff in compliance with the Commission's order in Northeast Utilities Service Company, 89 FERC ¶ 61,184 (1999).

Comment date: February 3, 2000, in accordance with Standard Paragraph E at the end of this notice.

Standard Paragraph

E. Any person desiring to be heard or to protest such filing should file a motion to intervene or protest with the Federal Energy Regulatory Commission, 888 First Street, NE, Washington, DC 20426, in accordance with Rules 211 and 214 of the Commission's Rules of Practice and Procedure (18 CFR 385.211 and 385.214). All such motions or protests should be filed on or before the comment date. Protests will be considered by the Commission in determining the appropriate action to be taken, but will not serve to make protestants parties to the proceeding. Any person wishing to become a party must file a motion to intervene. Copies of these filings are on file with the Commission and are available for public inspection. This filing may also be viewed on the Internet at http://www.ferc.fed.us/online/rims.htm (call 202–208–2222 for assistance).

David P. Boergers,

Secretary.

[FR Doc. 00–2335 Filed 2–2–00; 8:45 am]

BILLING CODE 6717–01–P

DEPARTMENT OF ENERGY

Federal Energy Regulatory Commission

[Docket No. CP99–94–000]

Florida Gas Transmission Company; Notice of Availability of the Final Environmental Impact Statement for the Proposed FGT Phase IV Expansion Project

January 28, 2000.

The staff of the Federal Energy Regulatory Commission (FERC or Commission) has prepared a Final Environmental Impact Statement (FEIS) on the natural gas pipeline facilities proposed by Florida Gas Transmission Company (FGT) in the above-referenced docket.

The FEIS was prepared to satisfy the requirements of the National Environmental Policy Act. The staff concludes that approval of the proposed project with the appropriate mitigating measures as recommended, would have limited adverse environmental impact. The FEIS also evaluates alternatives to the proposal, including system alternatives; major route alternatives; and route variations.

On December 1, 1998, FGT filed with FERC the original description of the proposed action for the FGT Phase IV Expansion Project. In May 1999, FGT filed modifications to the proposed route for several of the pipeline components.[1]

The proposed action and the environment analysis in the FEIS are based on the May 1999 filing as affected by the August 23, 1999 deletions.

The FEIS addresses the potential environmental effects of the construction and operation of the following facilities:

A. Pipeline facilities:

1. In Mississippi, FGT proposes to construct 9.3 miles of 36-inch-diameter pipeline in George and Greene Counties (Mainline Loop-Mississippi).

2. In Florida, FGT proposes to construct:

a. 6.1 miles of 30-inch-diameter pipeline in Bradford County (Mainline Loop-Florida);

b. 4.57 miles of 12-inch-diameter pipeline in Manatee County (Sarasota Lateral Loop);

c. 0.84 mile of 6-inch-diameter pipeline in Polk County (Lake Wales Lateral Loop Extension);

d. 5.73 miles of 4-inch-diameter pipeline in Hillsborough County (Tampa South Lateral Extension); and

e. 113.0 miles of 30- and 26-inch-diameter pipeline, consisting of 75.3 miles of 30-inch-diameter pipeline in Hillsborough, Polk, Hardee, and DeSoto Counties, and 37.7 miles of 26-inch-diameter pipeline in DeSoto, Charlotte, and Lee Counties (West Leg Extension).

B. Compressor facilities:

1. In Florida, FGT proposes to:

a. add 10,350 hp of compression to the existing CS 12A in Santa Rosa County;

b. add 10,350 hp of compression to the existing CS 14A in Gadsden County;

c. construct a new 10,350 hp CS 24 in Gilchrist County; and

d. add 7,170 hp of compression to the existing CS 26 in Citrus County.

C. Associated aboveground facilities:

1. In Mississippi, FGT proposes to construct one mainline valve and one tie-on the Mainline Loop in Greene County.

2. In Florida, FGT proposes to construct:

a. The National Gypsum Meter Station in Hillsborough County, and the Florida Power and Light Company (FPL) Fort Myers Meter Station in Lee County; and

b. Miscellaneous facilities, including two tie-ins in Bradford County; two tie-ins in Manatee County; two tie-ins on the Lake Wales Lateral Loop Extension in Polk County; one tie-in on the Tampa South Lateral Extension in Hillsborough County; and on the West Leg Extension, one tie-in in Hillsborough County, one crossover in Polk County, two interconnections in Polk County, one tap valve and tie-in in Lee County, and eight mainline valves in Hillsborough, Polk, Hardee, DeSoto, and Charlotte Counties.

The purpose of the proposed FGT Phase IV Expansion Project is to deliver natural gas largely for electric power

[1] The FEIS provides a complete listing of the facilities which FGT withdrew from its application on August 23, 1999, including for example the New Smyrna Beach Lateral and its associated Duke Energy Meter Station.

generation. The largest user, for which most of the proposed facilities would be constructed, is FPL for the existing Fort Myers Power Generating Station in Lee County, Florida. In addition, one natural gas local distribution company (LDC) and two industrial customers would be served with small quantities of natural gas.

The FEIS has been placed in the public files of the FERC and is available for public inspection at: Federal Energy Regulatory Commission, Public Reference and Files Maintenance Branch, 888 First Street, N.E., Room 2A, Washington, DC 20426, (202) 208–1371.

Copies of the FEIS have been mailed to Federal, state and local agencies, public interest groups, individuals who have requested the FEIS, newspapers, and parties to this proceeding.

In accordance with the Council on Environmental Quality's (CEQ) regulations implementing the National Environmental Policy Act, no agency decision on a proposed action may be made until 30 days after the U.S. Environmental Protection Agency publishes a notice of availability of an FEIS. However, the CEQ regulations provide an exception to this rule when an agency decision is subject to a formal internal appeal process which allows other agencies or the public to make their views known. In such cases, the agency decision may be made at the same time the notice of the FEIS is published, allowing both periods to run concurrently. The Commission decision for this proposed action is subject to a 30-day rehearing period.

Additional information about the proposed project is available from Paul McKee in the Commission's Office of External Affairs, at (202) 208–1088 or on the FERC Internet website (www.ferc.fed.us) using the ''RIMS'' link to information in this docket number. Click on the ''RIMS'' link, select ''Docket #'' from the RIMS Menu, and follow the instructions. For assistance with access to RIMS, the RIMS helpline can be reached at (202) 208–2222.

Similarly, the ''CIPS'' link on the FERC Internet website provides access to the texts of formal documents issued by the Commission, such as orders, notices, and rulemakings. From the FERC Internet website, click on the ''CIPS'' link, select ''Docket #'' from the CIPS menu, and follow the instructions. For assistance with access to CIPS, the CIPS helpline can be reached at (202) 208–2474.

David P. Boergers,

Secretary

[FR Doc. 00–2378 Filed 2–2–00; 8:45am]

BILLING CODE 6717–01–M

DEPARTMENT OF ENERGY

Federal Energy Regulatory Commission

Notice of Application Analysis and Soliciting Comments, Recommendations, Terms and Conditions, and Prescriptions

January 28, 2000.

Take notice the following hydroelectric application has been filed with the Commission and is available for public inspection:

a. *Type of Application:* Minor License.

b. *Project No.:* P–11730–000.

c. *Date Filed:* April 21, 1999.

d. *Applicant:* Black River Limited Partnership.

e. *Name of Project:* Alverno Hydroelectric Project.

f. *Location:* On the Black River in the Townships of Aloha, Benton, and Grant, in Cheboygan County, Michigan. The project would not utilize federal lands.

g. *Filed Pursuant to:* Federal Power Act 16 U.S.C. 791(a)–825(r).

h. *Applicant Contact;* Frank O. Christie, President, Franklin Hydro, Inc., P.O. Box 967, Traverse City, MI 49685–0967, (231) 946–5797.

i. *FERC Contact:* Any questions on this notice should be addressed to John Costello, E-mail address, john.costello@ferc.fed.us or telephone at (202) 219–2914.

j. *Deadline for filing comments, recommendations, terms and conditions, and prescriptions:* 60 days from the issuance date of this notce.

All documents (original and eight copies) should be filed with: David P. Boergers, Secretary, Federal Energy Regulatory Commission, 888 First Street, N.E., Washington, DC 20426.

The Commission's Rules of Practice and Procedure require all intervenors filing documents with the Commission to serve a copy of that document on each person whose name appears on the official serve list for the project. Further, if an intervenor files comments or documents with the Commission relating to the merits of an issue that may affect the responsibilities of a particular resource agency, they must also serve a copy of the document on the resource agency.

k. *Status of Environmental Analysis:* This application has been accepted for filing and is ready for environmental analysis at this time.

i. *Description of Project:* The constructed project consists of a 360-foot-long earth filed dam with a power plant located on the right riverbank and a gated spillway near the left bank. The project impoundment extends approximately 2.5 miles upstream. The powerhouse contains 2 horizontal turbine/generator sets.

m. *Locations of the Application:* A copy of the application is available for inspection and reproduction at the Commission's Public Reference and Files and Maintenance Branch, located at 888 First Street, N.E., Room 2A–1, Washington, D.C. 20426, or by calling (202) 208–1371. The application may be view on the web at *www.ferc.fed.us.* Call (202) 208–2222. A copy is also available for inspection and reproduction at the Cheboygan Public Library, 107 South Ball Street, Cheboygan, Michigan.

Filing and Service of Responsive Documents

The application is ready for environmental analysis at this time, and the Commission is requesting comments, reply comments, recommendations, terms and conditions, and prescriptions.

The Commission directs, pursuant to Section 4.34(b) of the Regulations (see Order No. 533 issued May 8, 1991, 56 FR 23108, May 20, 1991) that all comments, recommendations, terms and conditions and prescriptions concerning the application be filed with the Commission within 60 days from the issuance date of this notice. All reply comments must be filed with the Commission within 105 days from the date of this notice.

Anyone may obtain an extension of time for these deadlines from the Commission only upon a showing of good cause or extraordinary circumstances in accordance with 18 CFR 385.2008.

All filings must (1) bear in all capital letters the title ''COMMENTS'', ''REPLY COMMENTS'', ''RECOMMENDATIONS,'' ''TERMS AND CONDITIONS,'' or ''PRESCRIPTIONS;'' (2) set forth in the heading the name of the applicant and the project number of the application to which the filing responds; (3) furnish the name, address, and telephone number of the person submitting the filing; and (4) otherwise comply with the requirements of 18 CFR 385.2001 through 385.2005. All comments, recommendations, terms and conditions or prescriptions must set forth their

evidentiary basis and otherwise comply with the requirements of 18 CFR 4.34(b). Agencies may obtain copies of the application directly from the applicant. Any of these documents must be filed by providing the original and the number of copies required by the Commission's regulations to: The Secretary, Federal Energy Regulatory Commission, 888 First Street, N.E., Washington, D.C. 20426. An additional copy must be sent to Director, Division of Project Review, Office of Hydropower Licensing, Federal Energy Regulatory Commission, at the above address. Each filing must be accompanied by proof of service on all persons listed on the service list prepared by the Commission in this proceeding, in accordance with 18 CFR 4.34(b), and 385.2010.

David P. Boergers,

Secretary.

[FR Doc. 00–2372 Filed 2–2–00; 8:45 am]

BILLING CODE 6717–01–M

DEPARTMENT OF ENERGY

Federal Energy Regulatory Commission

Notice of Application Ready for Environmental Analysis and Soliciting Comments, Recommendations, Terms and Conditions, and Prescriptions

January 28, 2000.

Take notice that the following hydroelectric application has been filed with the Commission and is available for public inspection:

a. *Type of Application:* Major Relicense.

b. *Project No.:* P–2634–007.

c. *Date Filed:* April 28, 1998.

d. *Applicant:* Great Northern Paper, Inc.

e. *Name of Project:* Storage Project.

f. *Location:* On Ragged Stream, Caucomgomoc Stream, and West Branch and South Branch of the Penobscot River in the Counties of Somerset and Piscataquis, Maine. The project would not utilize federal lands.

g. *Filed Pursuant to:* Federal Power Act 16 U.S.C. §§ 791 (a)–825(r).

h. *Applicant Contact:* Brain Stetson, Manager of Environmental Affairs, Great Northern Paper, Inc., One Katahdin Avenue, Millinocket, ME 04462–1398 (207) 723–2664.

i. *FERC Contact:* Any questions on this notice should be addressed to John Costello, E-mail address, *john.costello@ferc.fed.us,* or telephone (202) 219–2914.

j. *Deadline for filing comments, recommendations, terms and conditions, and prescriptions:* 60 days from this issuance date of this notice.

All documents (original and eight copies) should be filed with: David P. Boergers, Secretary, Federal Energy Regulatory Commission, 888 First Street, N.E., Washington, DC 20426.

The Commission's Rules of Practice and Procedure require all intervenors filing documents with the Commission to serve a copy of that document on each person whose name appears on the official serve list for the project. Further, if an intervenor files comments or documents with the Commission relating to the merits of an issue that may affect the responsibilities of a particular resource agency, they must also serve a copy of the document on the resource agency.

k. *Status of Environmental Analysis:* The application has been accepted for filing and is ready for environmental analysis at this time.

l. *Description of Project:* The constructed project consists of four dams and reservoirs on headwaters tributaries of the Penobscot River. The four developments are named Canada Falls Lake, Seboomook Lake, Caucomgomoc Lake, and Ragged Lake. There are no power generating facilities included in the project. The total storage capacity of the four reservoirs is about 9.224 billion cubic feet or about 212,000 acre-feet.

m. *Locations of the application:* A copy of the application is available for inspection and reproduction at the Commission's Public Reference Room, located at 888 First Street, N.E., Room 2A, Washington, DC 20426, or by calling (202) 208–1371. The application may be viewed on the web at *www.ferc.fed.us.* Call (202) 208–2222 for assistance. A copy is also available for inspection and reproduction at Great Northern Paper, Inc., One Katahdin Avenue, Millinocket, Maine 04462–1398; (207) 723–2664.

Filing and Service of Responsive Documents

The application is ready for environmental analysis at this time, and the Commission is requesting comments, reply comments, recommendations, terms and conditions, and prescriptions.

The Commission directs, pursuant to Section 4.34(b) of the Regulations (see Order No. 533 issued May 8, 1991, 56 FR 23108, May 20, 1991) that all comments, recommendations, terms and conditions and prescriptions concerning the application be filed with the Commission within 60 days from the issuance date of this notice. All reply comments must be filed with the Commission within 105 days from the date of this notice.

Anyone may obtain an extension of time for these deadlines from the Commission only upon a showing of good cause or extraordinary circumstances in accordance with 18 CFR 385.2008.

All filings must (1) bear in all capital letters the title ''COMMENTS'', ''REPLY COMMENTS'', ''RECOMMENDATIONS'', ''TERMS AND CONDITIONS'', OR ''PRESCRIPTIONS'', (2) set forth in the heading the name of the applicant and the project number of the application to which the filing responds; (3) furnish the name, address, and telephone number of the person submitting the filing; and (4) otherwise comply with the requirements of 18 CFR 385.2001 through 385.2005. All comments, recommendations, terms and conditions or prescriptions must set forth their evidentiary basis and otherwise comply with the requirements of 18 CFR 4.34(b). Agencies may obtain copies of the application directly from the applicant. Any of these documents must be filed by providing the original and the number of copies required by the Commission's regulations to: The Secretary, Federal Energy Regulatory Commission, 888 First Street, N.E., Washington, DC 20426. An additional copy must be sent to Director, Division of Project Review, Office of hydropower Licensing, Federal Energy Regulatory Commission, at the above address. Each filing must be accompanied by proof of service on all persons listed on the service list prepared by the Commission in this proceeding, in accordance with 18 CFR 4.34(b), and 385.2010.

David P. Boegers,

Secretary.

[FR Doc. 00–2375 Filed 2–2–00; 8:45 am]

BILLING CODE 6717–01–M

DEPARTMENT OF ENERGY

Federal Energy Regulatory Commission

Notice of an Amendment of License and Soliciting Comments, Motions to Intervene, and Protests

January 28, 2000.

Take notice that the following hydroelectric application has been filed with the Commission and is available for public inspection:

a. *Application Type:* Amendment of License

b. *Project No.:* 2853–058

c. *Date Filed:* November 16, 1999

d. *Applicant:* State of Montana—Department of Natural Resources and Conversation

e. *Name of Project:* Broadwater Power Project

f. *Location:* On the Missouri River, in Broadwater County, Montana

g. *Filed Pursuant to:* 18 CFR 4.200

h. *Applicant Contact:* Mr. Walt Anderson, 48 North Last Chance Gulch, P.O. Box 201601, Helena, MT 59620–1601, Telephone: (406) 444–6646.

i. *FERC Contact:* Any questions on this notice should be addressed to Jake Tung at hong.tung@ferc.fed.us or 202–219–2663.

j. *Deadline for filing comments and/or motions:* March 15, 2000

All documents (original and eight copies) should be filed by March 15, 2000, with: David P. Boergers, Secretary, Federal Energy Regulatory Commission, 888 First Street, NE, Washington DC 20426. Please include the project number (2853–058) on any comments or motions filed.

k. *Description of Filing:* State of Montana—Department of Natural Resources and Conservation, licensee for the Broadwater Power project, proposes to construct a structural wall in the upstream reservoir between the turbine intake and the canal intake. The wall will begin at the upstream face of the dam and extend approximately 150 feet, with the centerline located about 50 feet from the right shoreline. The wall will be about 150 feet long, five-foot wide at top, and approximately 18 inches above the upstream normal reservoir operating level. The purpose of the wall structure is to separate the canal intake from the hydraulic influences of the turbine intake.

l. *Locations of the application:* A copy of the application is available for inspection and reproduction at the Commission's Public Reference Room, located at 888 First Street, NE, Room 2A, Washington, DC 20426, or by calling (202) 208–1371. The application may be viewed on the web at http://www.ferc.fed.us/online/rims.htm, (call (202) 208–2222 for assistance). A copy is also available for inspection and reproduction at the address in item ''h'' above.

m. Individuals desiring to be included on the Commission's mailing list should so indicate by writing to the Secretary of the Commission.

Comments, Protests, or Motions To Intervene

Anyone may submit comments, a protest, or a motion to intervene in accordance with the requirements of Rules of Practice and Procedure, 18 CFR 385.210, .211, .214. In determining the appropriate action to take, the Commission will consider all protests or other comments filed, but only those who file a motion to intervene in accordance with the Commission's Rules may become a party to the proceeding. Any comments, protests, or motions to intervene must be received on or before the specified comment date for the particular application.

Filing and Service of Responsive Documents

Any filings must bear in all capital letters the title ''COMMENTS'', ''RECOMMENDATIONS FOR TERMS AND CONDITIONS'', ''PROTEST'', OR ''MOTION TO INTERVENE'', as applicable, and the Project Number of the particular application to which the filing refers. Any of the above-named documents must be filed by providing the original and the number of copies provided by the Commission's regulations to: The Secretary, Federal Energy Regulatory Commission, 888 First Street, NE, Washington, D.C. 20426. A copy of any motion to intervene must also be served upon each representative of the Applicant specified in the particular application.

Agency Comments

Federal, state, and local agencies are invited to file comments on the described application. A copy of the application may be obtained by agencies directly from the Applicant. If an agency does not file comments within the time specified for filing comments, it will be presumed to have no comments. One copy of an agency's comments must also be sent to the Applicant's representatives.

David P. Boergers,

Secretary.

[FR Doc. 00–2376 Filed 2–2–00; 8:45 am]

BILLING CODE 6717–01–M

DEPARTMENT OF ENERGY

Federal Energy Regulatory Commission

Notice of Application Ready for Environmental Analysis and Soliciting Comments, Recommendations, Terms and Conditions, and Prescriptions

January 28, 2000.

Take notice that the following hydroelectric application has been filed with the Commission and is available for public inspection:

a. *Type of Application:* New Major License.

b. *Project No.:* 2866–008.

c. *Date filed:* November 8, 1999.

d. *Applicant:* Metropolitan Water Reclamation District of Greater Chicago.

e. *Name of Project:* Lockport Hydroelectric Project.

f. *Location:* On the Chicago Sanitary and Ship Canal, in Will County, Illinois. The project utilizes facilities of the U.S. Army Corps of Engineers.

g. *Filed Pursuant to:* Federal Power Act, 16 U.S.C. §§ 791(a)–825(r).

h. *Applicant Contact:* Thomas K. O'connor, Chief of Maintenance and Operations, or Gregory D. Cargill, Assistant Chief Engineer, General Division, Metropolitan Water Reclamation District of Greater Chicago, 100 East Erie Street, Chicago, IL 60611–5102, Telephone (312) 751–5102.

i. *FERC Contact:* Hector Perez, hector.perez@ferc.fed.us, (202) 219–2843.

j. *Deadline for filing comments, terms, conditions, and prescriptions:* Sixty days from the issuance date of this notice.

All documents (original and eight copies) should be filed with: David P. Boergers, Secretary, Federal Energy Regulatory Commission, 888 First Street, NE, Washington, DC 20426.

The Commission's Rules of Practice and Procedure require all intervener filing documents with the Commission to serve a copy of that document on each person on the official service list for the project. Further, if an intervener files comments or documents with the Commission relating to the merits of an issue that may affect the responsibilities of a particular resource agency, they must also serve a copy of the document on that resource agency.

k. This application is not ready for environmental analysis at this time.

l. *The project consists of the following existing facilities:* (1) A 385-foot-long powerhouse containing two generating units with a total installed capacity of 13.5 MW; (2) a concrete and masonry dam between the Federal Navigation Lock and the powerhouse including a 22-foot-wide abandoned lock, a 20-foot-wide sluice-gate section for passing debris and ice, and a 12-foot-wide non-overflow concrete section; (3) a fender wall approximately 530 feet long for debris skimming and ice protection; (4) a substation; (5) an access road approximately one mile long; and (6) appurtenant facilities.

The applicant does not propose any modifications to the project features or operation, and no additional capacity is proposed for this project under this new license.

m. A copy of the application is available for inspection and

reproduction at the Commission's Public Reference Room, located at 888 First Street, NE, Room 2A, Washington, D.C. 20426, or by calling (202) 208–1371. The application may be viewed on http://www.ferc.fed.us/online/rims.htm (call (202)208–2222 for assistance). A copy is also available for inspection and reproduction at the address in item h above.

Filing and Service of Responsive Documents

The application is ready for environmental analysis at this time, and the Commission is requesting comments, reply comments, recommendations, terms and conditions, and prescriptions.

The Commission directs, pursuant to Section 4.34(b) of the Regulations (see Order No. 533 issued May 8, 1991, 56 FR 23108, May 20, 1991) that all comments, recommendations, terms and conditions and prescriptions concerning the application be filed with the Commission within 60 days from the issuance date of this notice. All reply comments must be filed with the Commission within 105 days from the date of this notice.

Anyone may obtain an extension of time for these deadlines from the Commission only upon a showing a good cause or extraordinary circumstances in accordance with 18 CFR 385.2008.

All filings must (1) bear in all capital letters the title ''COMMENTS'', ''REPLY COMMENTS'', ''RECOMMENDATIONS,'' ''TERMS AND CONDITIONS,'' or ''PRESCRIPTIONS;'' (2) set forth in the heading the name of the applicant and the project number of the application to which the filing responds; (3) furnish the name, address, and telephone number of the person submitting the filing; and (4) otherwise comply with the requirements of 18 CFR 385.2001 through 385.2005. All comments, recommendations, terms and conditions or prescriptions must set forth their evidentiary basis and otherwise comply with the requirements of 18 CFR 4.34(b). Agencies may obtain copies of the application directly from the applicant. Any of these documents must be filed by providing the original and the number of copies required by the Commission's regulations to: The Secretary, Federal Energy Regulatory Commission, 888 First Street, NE, Washington, DC 20426. An additional copy must be sent to Director, Division of Project Review, Office of Hydropower Licensing, Federal Energy Regulatory Commission, at the above address. Each filing must be accompanied by proof of service on all persons listed on the service list prepared by the Commission in this proceeding, in accordance with 18 CFR 4.34(b), and 385.2010.

David P. Boergers,

Secretary.

[FR Doc. 00–2377 Filed 2–2–00; 8:45 am]

BILLING CODE 6717–01–M

ENVIRONMENTAL PROTECTION AGENCY

[FRL–6531–9]

Proposed CERCLA Administrative Cost Recovery Settlement; Eagle-Picher Industries, Inc.

AGENCY: Environmental Protection Agency.

ACTION: Notice; request for public comment.

SUMMARY: In accordance with Section 112(h) of the Comprehensive Environmental Response, Compensation, and Liability Act, as amended (''CERCLA''), 42 U.S.C. 9622(h), notice is hereby given of a proposed administrative settlement for recovery of past response costs concerning the Former Witter Company site in Asbury, Missouri with the following settling party: Eagle-Picher Industries, Inc. The settlement requires the settling party to pay $796,595.59 to the Hazardous Substance Superfund. Eagle-Picher Industries, Inc., the settling party filed for bankruptcy in 1991. Under a reorganization plan, allowed claims will be paid on a 33 cents per dollar basis, and it is on that basis that reimbursement will be made to the Hazardous Substance Superfund in the amount of $262,876.54. The settlement includes a covenant not to sue the settling party pursuant to Section 107(a) of CERCLA, 42 U.S.C. 9607(a). For thirty (30) days following the date of publication of this notice, the Agency will receive written comments relating to the settlement. The Agency will consider all comments received and may modify or withdraw its consent to the settlement if comments received disclose facts or considerations which indicate that the settlement is in appropriate, improper, or inadequate. The Agency's response to any comments received will be available for public inspection at Web City Free Public Library, 101 S. Liberty Street, Webb City, Missouri, and Office of Regional Hearing Clerk, EPA, 901 North 5th Street, Kansas City, KS 66101.

DATES: Comments must be submitted on or before March 6, 2000.

ADDRESSES: The proposed settlement and a fact sheet providing additional background information relating to the settlement are available for public inspection at Office of Regional Hearing Clerk, Environmental Protection Agency, 901 N. 5th Street, Kansas City, KS 66101. A copy of the proposed settlement may be obtained from Kathy Robinson, Regional Hearing Clerk, EPA, 901 N. 5th Street, Kansas City, KS 66101, telephone 913–551–7567. Comments should reference the Former Witter Company Site, Asbury, Missouri, Docket No. CERCLA–7–2000–0003 and should be addressed to Regional Hearing Clerk, EPA, 901 N. 5th Street, Kansas City, KS 66101.

FOR FURTHER INFORMATION CONTACT: Kristina Gonzales, Assistant Regional Counsel, EPA, 901 N. 5th Street, Kansas City, KS 66101, telephone: 913–551–7245.

Dated: January 20, 2000.

Dennis Grams, P.E.,

Regional Administrator, Region VII.

[FR Doc. 00–2280 Filed 2–2–00, 8:45 am]

BILLING CODE 6560–50–M

FARM CREDIT SYSTEM INSURANCE CORPORATION

Policy Statement on the Secure Base Amount and Allocated Insurance Reserve Accounts

AGENCY: Farm Credit System Insurance Corporation.

ACTION: Policy statement.

SUMMARY: The Farm Credit System Insurance Corporation (Corporation) is publishing in final a Policy Statement on the Secure Base Amount and Allocated Insurance Reserve Accounts (AIRAs). This Policy Statement establishes a framework for the periodic determination of the Farm Credit Insurance Fund's (Insurance Fund) secure base amount. It also implements the Corporation's authority to allocate excess Insurance Fund balances above the secure base amount into an account for each insured Farm Credit System Bank and one for the Farm Credit System Financial Assistance Corporation (FAC) stockholders. The policy statement was published for public comment in the **Federal Register** on October 5, 1998 (63 FR 53423).

EFFECTIVE DATE: December 15, 1999.

FOR FURTHER INFORMATION CONTACT: Dorothy L. Nichols, General Counsel, Farm Credit System Insurance Corporation, 1501 Farm Credit Drive, McLean, Virginia 22102, (703) 883–4380, TDD (703) 883–4444.

SUPPLEMENTARY INFORMATION: In 1987, Congress directed the Corporation to build and manage the Insurance Fund to achieve and maintain the secure base amount (SBA). For insurance premium purposes, the statute defines the SBA as 2 percent of the aggregate outstanding insured obligations of all insured banks (excluding a percentage of state and Federally guaranteed loans) or such other percentage of the aggregate amount as the Corporation in its sole discretion determines is ''actuarially sound.'' (12 U.S.C. 2277a–4(c)).

The Corporation's Board of Directors (Board) reviews premiums at least semiannually to determine whether to adjust assessments in response to changing conditions. The statute specifies a limited form of risk-based premium assessments: 25 basis points for nonaccrual loans; 15 basis points for loans in accrual status (excluding certain state and Federally guaranteed loans); and a very modest premium for government-guaranteed loans. (12 U.S.C. 2277a–4(a)). This formula was designed as an incentive for the Farm Credit System to make quality loans and at the same time build the Insurance Fund to a level that Congress believed would make a default on System debt obligations less likely.

In the Farm Credit System Reform Act of 1996, Congress gave the Corporation the discretion to reduce premium assessments before reaching the SBA. (12 U.S.C. 2277a–4(a)). It also established a process for making partial distributions of excess funds in the Insurance Fund. (12 U.S.C. 2277a–4(e)).

I. Secure Base Amount Determination

The law sets out a formula for determining the SBA: ''2 percent of the aggregate outstanding insured obligations of all insured System banks.'' (12 U.S.C. 2277a–4). It also allows the Corporation to choose another percentage, ''as the Corporation in its sole discretion determines is actuarially sound to maintain in the Insurance Fund taking into account the risk of insuring outstanding insured obligations.'' *Id.* Thus far, the Corporation has used the statutory formula.

1. Accrued Interest

In the statute, an insured obligation is defined as ''any note, bond, debenture, or other obligation'' issued on behalf of an insured System bank under the appropriate subsection of section 4.2 of the Farm Credit Act of 1971, as amended (Act) (12 U.S.C. 2277a). The proposed Policy Statement included both principal and accrued interest in the definition of ''insured obligation'' because section 5.52 of the Act established the Corporation to ensure the timely payment of principal and *interest* to investors. *See* 63 FR 53423, Oct. 5, 1998. Also, it is commonly understood that an issuer of bonds or notes has an obligation to pay a debt, which includes interest, when due. Accordingly, to promote the safety and soundness of the System and add a safeguard for investors, the Board included ''accrued interest'' in the definition.

One commenter, commenting on behalf of System institutions, suggests that before including accrued interest in the definition, the Corporation should demonstrate that there is some actuarial reason for the secure base to be maintained at the higher level that will result from the inclusion of accrued interest. The Board disagrees with the commenter. The issue is a matter of statutory interpretation; it is not dependent upon an ''actuarial'' reason.

As noted, both principal and interest are insured. Thus, the ''insured obligation'' of FCSIC at a point in time is equal to both the principal and accrued interest at that point in time. The Policy Statement's inclusion of ''accrued interest'' in the definition of ''insured obligation'' for purposes of determining the SBA is consistent with the statute and its legislative history.

2. Maintaining the SBA

After calculating the insured obligations, the Corporation will apply the deductions specified in the statute for the government guaranteed portion of the System loans to determine the SBA. This calculation will be done at the end of each quarter. After the end of the calendar year, using the December 31 balances, the Corporation will decide whether the Insurance Fund exceeds the SBA. The Policy Statement uses the December 31 balances for this calculation because the statute, in the premium section, contemplates using a point in time method in this context (12 U.S.C. 2277a–4(c)).

A commenter noted that the proposed Policy Statement and its preamble state the Corporation's commitment ''to attain and maintain'' the Fund at the SBA. The commenter suggested that this was a marked departure from the Policy Statement Concerning Adjustments to the Insurance Premiums and inconsistent with the statute. This contention is incorrect. The preamble to the Policy Statement Concerning Adjustments to the Insurance Premiums provides that the Corporation will attain and maintain the Fund at the SBA. *See* 61 FR 39453, July 29, 1996. Thus, the new Policy Statement's requirement ''to attain and maintain'' the Fund is consistent with the earlier one on insurance premium adjustments.

More importantly, this Policy Statement is consistent with the law. Section 5.55(b) of the Act directs the Corporation to reduce the premiums if the aggregate amounts in the Insurance Fund exceed the SBA. However, this same provision requires the Corporation to temper reductions so that premiums continue to be ''sufficient to ensure that the aggregate of amounts in the Farm Credit Insurance Fund after such premiums are paid is not less than the secure base amount at such time'' (12 U.S.C. 2277a–4(b)). This provision directs the Corporation to maintain the SBA, even after it reduces premiums.

The House Report on H.R. 3030 (H. Rep. 100–295), which in large part was adopted by the Conference Committee in 1987 when the Corporation was created, supports this interpretation. It states at page 61: '' The fund would be maintained at 2 percent of the value of all System loans outstanding or such other level deemed appropriate by the board'' (emphasis added). While Congress amended section 5.55 of the Act in 1996, granting FCSIC the discretion to reduce premiums before reaching the SBA, it did not alter the original mandate to reach the secure base amount and then maintain it at 2 percent.

In fact, when it added the AIRA accounts in 1996, Congress gave the Corporation ''sole discretion'' to eliminate or reduce the AIRA disbursements. Section 5.55(e)(6)(B) of the Act provides for elimination or reduction of disbursements if circumstances ''might require the use of the Farm Credit Insurance Fund'' and ''could cause the amount in the Farm Credit Insurance Fund during the calendar year to be less than the secure base amount'' (12 U.S.C. 2277a–4(e)(6)(B)). This provision demonstrates continued congressional intent to have the Corporation manage the Insurance Fund, including the new AIRAs, by maintaining the integrity of the SBA.

II. Allocated Insurance Reserve Accounts

1. Determining Whether There Are Excess Funds To Allocate to the AIRAs

The Farm Credit System Reform Act of 1996 established a process for making partial distributions of the Insurance Fund's balance above the SBA. It established in the Insurance Fund an AIRA for the benefit of each insured System bank and one for the FAC stockholders. The AIRAs remain a part of the Insurance Fund and are available

to the Corporation. In fact, under the statute, section 5.55(e)(5) of the Act, the AIRAs were designed to absorb losses first, if necessary.

AIRA allocations would be made only at the end of any year in which the Insurance Fund, plus the accumulated excess balance after deducting expenses and insurance obligations for the next year, is greater than the 2 percent SBA. If the Insurance Fund exceeds the SBA at the end of any calendar year (using December 31 balances), the statute requires the Corporation to determine whether any excess funds exist for allocation to the AIRAs. *See* section 5.55 (e)(5) of the Act. In determining whether excess funds exist, the statute calls for the Corporation to first calculate ''the average secure base amount for the calendar year (using average daily balances).''

a. AIRAs as Excess Reserves

The statute contemplates that the Insurance Fund be made up of two tiers (the SBA and the excess AIRA balances). This reading of the statute is supported by the House Report on H.R. 2029 (H. Rep. 104–421) at page 9. In explaining the purpose and need for the Farm Credit Reform Act of 1996, it states that the legislation is designed to ''provide for the rebate of interest accruing on the secure base amount.'' At another point on the same page, it explains that the legislation provides ''for the disbursement of money *above* the secure base amount of the insurance fund that has accrued from excess interest'' (emphasis added). In fact, section 5.55(e) of the Act is entitled ''Allocation to System Institutions of Excess Reserves.'' Clearly, Congress intended that the Insurance Fund would hold more funds than the SBA, with a partial disbursement of the excess after 2005, if no major losses occurred.

One commenter takes issue with this reading of the statute and suggests that the Corporation consider counting the AIRAs in the SBA, rather than as an excess reserve. The Board believes the Policy Statement accurately reflects the statute and the legislative history. It conforms to the 1996 Act by providing a mechanism to contain future growth above the SBA due to investment income. The statute provides that the AIRAs are the first source of funds for the Corporation if actual operating expenses or insurance obligations exceed projections. Thus, the first source is the excess above the 2 percent and the second source is the amount below it.

The impact of the commenter's suggestion, counting the AIRAs toward the SBA, is to effectively lower the SBA from the unallocated 2 percent, without the Board determining that such a reduction is ''actuarially sound.'' Furthermore, if you take this suggestion to its logical conclusion under a low growth scenario, the bulk of the Fund could be allocated to reserve accounts, eventually including even the $260 million in Treasury money and its accumulated interest. The Board does not believe that Congress contemplated either result.

b. Recalculating AIRAs Each Year or Fixing Them At Yearend

The proposed Policy Statement called for the AIRAs to be recalculated each year at calendar yearend. The amounts credited to the AIRAs would replace—rather than be added to—the amounts allocated the previous year. Thus, the amounts in the AIRAs would fluctuate, depending upon the annual calculation of the SBA and any excess Insurance Fund balance. The advantage of this approach is any amounts in the AIRAs would be available to capitalize high growth in insured obligations. In other words, if growth during any year outstripped the ability of the Fund's investment earnings to capitalize it, then the AIRAs could be tapped to reach or maintain the 2-percent SBA. Using the AIRAs in this manner could reduce or eliminate the need to assess premiums. However, recalculating each year would also likely reduce the amount in the AIRAs during high growth years, limiting distributions and reducing the total amount of funds available in the event of insurance losses.

One commenter suggested that the Board treat the amounts in the AIRAs as fixed at yearend. Under this approach, any funds allocated to an AIRA account would be tapped in the following years only if an insurance loss occurs or to fund underestimated expenses. The commenter further suggested that the Fund could grow back to the SBA through investment earnings or if necessary by raising insurance premiums.

The approach taken in the proposed Policy Statement reflected the statutory language allocating excess funds at the end of the year if the Insurance Fund exceeds the SBA for that year. While the Board believes it is reasonable and consistent with the statute to recalculate the AIRAs each year concurrent with the SBA calculation, it agrees with the commenter that it is also reasonable to treat the amounts in the AIRAs as fixed at yearend. Fixing the AIRAs is consistent with the statutory language describing how the Corporation should use the funds in the AIRAs. In fact, there is a tension in the statute between this part and the part that describes how to allocate funds to the AIRAs. The Board believes it could resolve this tension by choosing either method because both are reasonable interpretations of the statute.

By agreeing with the commenter and fixing amounts placed into the AIRAs more money will be retained during high growth years. This clearly benefits the AIRA account holders. However, the System may have to pay insurance premiums after a year where high growth in insured obligations causes the Fund to fall below the SBA; but as the commenter pointed out, the Board has clear authority to assess premiums in this circumstance. Also, the commenter noted that premiums would be paid on the basis of risk and growth rather than at the expense of AIRA account holders. For investors in the Systemwide debt, the aggregate value of the Insurance Fund will be higher in high growth years when insurance premiums are collected. Thus, this method has some advantages that are not present in yearend recalculation described in the proposed Policy Statement. For these reasons, the Board has decided not to recalculate the AIRAs each year but instead to fix the amounts at year-end.

c. Authorized Deductions

If the Insurance Fund exceeds the SBA, the statute requires that the Insurance Fund balance be adjusted downward by an estimate for the next calendar year of the:

1. Corporation's operating costs; and
2. Insurance obligations.

The Corporation will deduct the operating expenses it expects to incur for the next calendar year. Estimated insurance obligations are defined in the Policy Statement to include all anticipated allowances for insurance losses, claims, and other potential statutory uses of the Insurance Fund.

The Corporation prepares its financial statements on an accrual basis using generally accepted accounting principles (GAAP). GAAP requires the Corporation to recognize in its financial statements any probable loss that can be reasonably estimated. Thus, the Board has concluded that the Corporation should deduct probable losses estimated for the next year, recognizing that such a deduction could mean that no excess funds would be available for allocation to the AIRAs in a given year.

The proposed Policy Statement defined insurance obligations to include an estimate of expected growth in insured debt for the prospective 12 months, using a 3-year average to determine the estimate. The statute

grants the FCSIC, in its sole discretion, the authority to determine the sum of its estimated operating expenses and insurance obligations for purposes of determining if an excess Fund balance exists for allocation to the AIRAs. Accordingly, it is reasonable for the Board to exercise this discretion to include an amount necessary to adjust the Fund for anticipated growth in the System's insured debt. Including an anticipated growth factor as an authorized deduction from the excess balance will diminish the amount available for allocation to the AIRAs. Investors, however, would have a greater cushion of insurance protection.

System institutions that commented did not favor this approach because they may not receive as much in AIRA allocations. One commenter stated that covering growth out of excess reserves causes those who are not growing to subsidize out of their AIRAs the insurance premiums of those that are growing. Also, the commenter argued that including a deduction for estimated growth is not what Congress intended.[1] The commenter suggested that estimated growth should be considered when the Board reviews insurance premiums, not in the AIRA formula. This commenter also suggested that if the Board decided to include estimated growth, it should also include estimated investment earnings as a compensating factor. The Board agrees that it is reasonable to calculate operating expenses as a ''net'' figure by including estimated earnings if it adjusts the Insurance Fund for estimated growth.

The Board also agrees that it can and should consider growth estimates when it reviews insurance premiums. Thus, the Board has decided not to include an estimated growth factor as an authorized deduction in determining if an excess Fund balance exists for allocation to the AIRAs. As a result, neither estimated growth nor estimated earnings will be included. Only estimated operating expenses and insurance obligations for the prospective 12 months will be deducted.

d. Allocation Formula When Excess Funds Are Available

The Policy Statement includes the statutory formula for allocation of any excess Insurance Fund balances to FAC stockholders (10 percent) and to the insured System banks (90 percent). It also includes the 3-year average loan balance formula the statute mandates when the Corporation adds balances to each AIRA. The commenters did not question this approach. Exhibit 1 is a hypothetical example of how the AIRA program will operate. It compares the approach used in the proposed Policy Statement to the final approach, including determining the amount of excess Insurance Fund balances and allocating the balances to individual AIRA holders.

e. Use of Allocated Amounts When Reductions Are Required

The Policy Statement also interprets the statutory language governing use of the AIRAs when insurance obligations exceed estimated amounts. When actual expenses and insurance obligations exceed estimates from the previous yearend, the law requires the Corporation to reduce the balances in the AIRAs by proportional amounts. The statute, however, doesn't prescribe how the proportional amounts are to be determined.

The Board concluded that the Corporation should use the same technique to calculate reductions to the AIRAs as the statute uses to calculate additions, *i.e.,* the 3-year average loan balance formula. This weighted average allocation formula ensures that any reductions to AIRA balances are accomplished in the same manner as the allocations. The commenters did not take issue with this approach.

2. AIRA Accumulation Cycle

The law authorizes payments of a portion of AIRA balances to the System banks and FAC stockholders ''as soon as practicable during each calendar year beginning more than 8 years after the date on which the aggregate of the amounts'' in the Insurance Fund exceeds the SBA. (12 U.S.C. 2277a–4). While this language could be subject to varying interpretations, the Insurance Fund first attained the SBA in the first quarter of 1998, and thus payments could begin 8 years later. The Board has concluded that it is reasonable to consider making the first payment as soon as practicable after the first quarter in 2006. The proposed Policy Statement adopted the earliest possible payout date: 8 calendar years after the quarter-end when the SBA was initially attained. The commenters supported this approach.

An important corollary issue is how to address an interruption in the 8-year period. For example, if after establishing the AIRAs, the Corporation has to use them for an insurance action, does the accumulation cycle begin anew? The Policy Statement: (1) Grants the Board the authority to restart the accumulation period if the Insurance Fund drops below the SBA at any subsequent quarter-end during the 8-year period; (2) allows the Board to select an accumulation period, to begin at the next quarter-end when the Insurance Fund again attains the SBA; and (3) enumerates the factors the Board will consider in selecting an alternative accumulation period.

The statute grants the Board discretionary authority to determine whether to make distributions at the end of the 8-year AIRA accumulation cycle. Given this broad authority and the overall statutory scheme, it is reasonable for the Board to interpret the statute to permit it to change or restart the AIRA cycle if, at any time during this period, the Insurance Fund drops below the SBA.

The Policy Statement leaves the issue of selecting an alternative accumulation period open to decision on a case-by-case basis. This approach preserves maximum flexibility to tailor any alternative accumulation period to best fit the causes of a future shortfall in the Insurance Fund. For example, the circumstances where a period of rapid growth causes a temporary (or small) decline in the Insurance Fund below the SBA for one or more quarters are far less serious than a decline in the Insurance Fund caused by losses as a result of increased risk at System banks and associations.

One commenter found the Board's approach to be ''reasonable and sound.'' Another commenter did not take issue with the Board's discretionary authority to change or restart the 8-year AIRA cycle. It suggested, however, it would be inappropriate to delay the period when payouts begin if there is a temporary reduction below the SBA.[2] As noted above, the Board agrees this would be less serious than a substantial reduction due to insurance losses.

III. Issues for Later Consideration

The statute authorizes initial payment of any balances in the AIRAs beginning more than 8 years after attainment of the SBA, which could be as early as 2006. As this date approaches, the Corporation's Board will have to consider the Corporation's authority to reduce or eliminate AIRA payments,

[1] This commenter also took issue with a reference in the preamble that noted how a deduction for estimated growth might avoid the need for ''supplemental insurance premiums.'' FCSIC recognizes that Congress did not embrace the concept of ''supplemental premiums.'' A better choice of words would have been ''might avoid the need to assess additional premiums to build back to the SBA.''

[2] This same commenter took issue with the preamble's characterization of the 8-year accumulation period as established by Congress to ''allow for the creation of a secondary insurance reserve.'' We have eliminated the reference.

and calculation of the initial AIRA payment components.

The Board believes that these issues can be better addressed after the Corporation obtains experience in administering the AIRA program over several years. Also, the likelihood of payment beginning in 2006 must be considered somewhat uncertain at this time. The uncertainty stems from factors that will determine whether and how much of any AIRA accumulations will occur. These factors are:

1. Future growth in the level of insured debt outstanding;

2. Possible insurance claims or losses; and the

3. Level of investment earnings.

Because the Corporation cannot predict any of these factors with certainty now, it seems prudent to gain more experience with excess Insurance Fund balances before making these decisions about future payments. The commenters did not disagree with this approach.

BILLING CODE 6210–01–P

Exhibit 1

Allocated Insurance Reserve Account Program

Hypothetical Example: Determination of Excess Insurance Fund Balance

($ Millions)		Initial Proposed	Final
Insurance Fund Balance at December 31, XXXX		$ 1,265.0	$ 1,265.0
Less:	Est. FCSIC Operating Expenses for XXXY	$ (1.8)	$ (1.8)
	Est. FAC Provision for XXXY	$ (9.7)	$ (9.7)
	Est. Growth in Insured Debt Factor for XXXY (3.5%)	$ (42.7)	$ -
Adjusted Insurance Fund Balance		**$ 1,210.8**	**$ 1,253.5**
Secure Base Amount Calculation (Using Average Daily Balances) :			
Insured Systemwide and Consolidated Debt Outstanding	Principal	$62,500.0	$ 62,500.0
	Accrued Interest Payable	$ 600.0	$ 600.0
	Total	$63,100.0	$ 63,100.0
Less :	90% of guaranteed portions of Federal Government guaranteed loan principal	$ (3,500.0)	$ (3,500.0)
	80% of guaranteed portions of State government guaranteed loan principal	$ (8.0)	$ (8.0)
Adjusted Insured Debt Outstanding		$59,592.0	$ 59,592.0
Secure Base Amount		**$ 1,191.8**	**$ 1,191.8**
Excess Insurance Fund Balance (Adjusted Ins. Fund Balance less Secure Base Amount)		**$ 19.0**	**$ 61.7**
Amount to be allocated to Banks and FAC AIRAs		$ 19.0	$ 61.7

Hypothetical Example: Allocation Formula

				($ Millions)	Initial Proposed	Final
FAC Stockholders in aggregate (10% of Allocable Amount)					$ 1.9	$ 6.2
Banks (90%) based on prior three years average accrual loan principal outstanding						
	Average Daily Balances of Accrual Loan Principal					
	Prior Year	Prior Year -1	Prior Year -2	3 Year Avg.		
Bank 1	$ 16,450	$ 15,700	$ 15,400	$ 15,850	$ 4.8	$ 15.5
Bank 2	$ 15,500	$ 15,600	$ 15,000	$ 15,367	$ 4.6	$ 15.0
Bank 3	$ 4,000	$ 3,600	$ 3,500	$ 3,700	$ 1.1	$ 3.6
Bank 4	$ 4,400	$ 3,950	$ 3,800	$ 4,050	$ 1.2	$ 4.0
Bank 5	$ 4,500	$ 4,100	$ 3,950	$ 4,183	$ 1.3	$ 4.1
Bank 6	$ 6,450	$ 6,100	$ 5,700	$ 6,083	$ 1.8	$ 5.9
Bank 7	$ 8,200	$ 7,400	$ 7,100	$ 7,567	$ 2.3	$ 7.4
Totals	$ 59,500	$ 56,450	$ 54,450	$ 56,800	$ 17.1	$ 55.5

BILLING CODE 6210–01–C

Farm Credit System Insurance Corporation Policy Statement on the Secure Base Amount and Allocated Insurance Reserve Account Program

NV–99–05

Effective Date: Upon adoption.
Effect on Previous Action: None.
Source of Authority: Section 5.55 of the Farm Credit Act of 1971, as amended (the Act); 12 U.S.C. 2277a–4.

Whereas, section 5.52 of the Act established the Farm Credit System Insurance Corporation (Corporation) to, among other things, insure the timely payment of principal and interest on Farm Credit System obligations (12 U.S.C. 2277a–1); and

Whereas, section 5.55 of the Act mandates that the Corporation will build and manage the Farm Credit Insurance Fund (Insurance Fund) to attain and maintain a secure base amount (SBA), defined as 2 percent of the aggregate outstanding insured obligations of all insured System banks (excluding a percentage of State and federally guaranteed loans) or such other percentage of the aggregate amount as the Corporation in its sole discretion determines is actuarially sound; and

Whereas, the Farm Credit System Reform Act of 1996, Public Law 104–105, 110 Stat. 162 (Feb. 10, 1996), amended section 5.55 of the Act to: (1) Establish in the Insurance Fund an Allocated Insurance Reserve Account (AIRA) for the benefit of each insured System bank and one for the Farm Credit System Financial Assistance Corporation (FAC) stockholders; (2) allocate any excess balances above the SBA to these AIRAs; and (3) eventually make partial distributions of the excess funds in the AIRAs.

NOW, therefore, the Corporation's Board of Directors (Board) adopts the following Policy Statement to govern the calculation of the secure base amount, the determination of any excess above the SBA, the establishment of the AIRAs, and the method for allocating any excess to the AIRAs.

I. Secure Base Amount Determination

As stated in the Corporation's Policy Statement Concerning Adjustments to the Insurance Premiums (BM–11–JUL–96–02), the Board will review the premium assessments at least semiannually to determine whether to adjust premiums in response to changing conditions. The Board continued this review even after the Insurance Fund achieved the SBA because the law requires the Corporation to maintain the SBA. Thus, the Corporation must ensure that as the Farm Credit System's insured debt grows, or if the Insurance Fund suffers a significant loss, the Insurance Fund builds back to the SBA.

The Farm Credit Reform Act of 1996 established a process for making partial distributions of the Insurance Fund's balance above the SBA. If excess reserves accumulate, these distributions can begin at a point 8 years after the Insurance Fund reaches the SBA, but no sooner than 2005. The Insurance Fund first attained the SBA in 1998, and thus the payments could begin 8 years later. To begin the process the Corporation must define ''the aggregate outstanding insured obligations'' of all the System banks. Then it must follow the steps in the statute to determine the SBA. Finally, at the end of any calendar year in which the Insurance Fund attains the secure base amount, the Corporation must determine whether any excess funds exist for allocation to the AIRAs.

The principal calculation for determining whether the Insurance Fund is at the SBA amount will be 2 percent of the aggregate adjusted insured obligations defined as follows:

1. ''Insured obligation'' means any note, bond, debenture, or other obligation issued under subsection (c) or (d) of section 4.2 of the Farm Credit Act on or before January 5, 1989, on behalf of any System bank; and after such date which, when issued, is issued on behalf of any insured System bank and is outstanding at the quarter-end. The balance outstanding at the quarter-end shall include principal and accrued interest payable as reported by the banks in the call reports submitted to the Farm Credit Administration.

2. The balance of insured obligations determined in Number 1 shall be reduced by an amount equal to the sum of:

(a) 90 percent of the guaranteed portions of principal outstanding on Federal Government-guaranteed loans in accrual status at all System institutions; and

(b) 80 percent of the guaranteed portions of principal outstanding on State Government-guaranteed loans in accrual status at all System institutions.

At the end of any calendar year when the Insurance Fund balance exceeds the SBA, calculated using December 31, balances (point-in-time method), the Corporation will determine whether any excess funds exist for allocation to the AIRAs.

II. Allocated Insurance Reserve Accounts

1. Determination of Excess Insurance Fund Balances

An allocated insurance reserve account (AIRA) shall be established in the Insurance Fund for each insured System bank and for FAC stockholders. Amounts representing excess Insurance Fund balances would be allocated to the AIRAs. The AIRAs remain a part of the Insurance Fund and are available to the Corporation.

(a) Authorized Deductions

In determining whether there are any excess insurance reserves, the December 31 Insurance Fund balance will first be adjusted downward by:

(1) The Corporation's estimated operating expenses for the next 12 months; and

(2) The Corporation's estimated insurance obligations for the next 12 months.

The Corporation will budget for the next calendar year operating expenses and it will deduct the operating expenses it expects to incur. When determining estimated insurance obligations, the Corporation will include all anticipated allowances for insurance losses, claims, and other potential statutory uses of the Insurance Fund.

The adjusted aggregate yearend Insurance Fund balance will then be compared with the SBA. The Corporation will calculate the SBA using an average daily balance method for the previous calendar year. The statute requires use of an average daily balance method for calculating the SBA *only* for purposes of determining the amount of any excess Insurance Fund balances.

When the aggregate adjusted Insurance Fund balance exceeds the SBA calculated using the average daily balance method, the excess Fund balance shall be allocated to the accounts of each insured System bank and to the FAC stockholders. The AIRA balances will be fixed at yearend and any amounts to be credited in subsequent years will be added to amounts allocated the previous year.

(b) Allocation Formula When Excess Funds Are Available

(1) Ten percent of the excess Insurance Fund balance shall be credited to the AIRA for all holders, in the aggregate, of Financial Assistance Corporation stock. The total amount that may be allocated to this AIRA is limited to $56 million.

(2) The remaining amount of the excess Insurance Fund balance shall be credited to the AIRAs for each insured System bank. The basis for crediting the excess balance to each bank's AIRA shall be the ratio of its average daily accrual loan principal outstanding for the three prior years divided by the total average daily accrual loan principal outstanding for all System banks. System bank loan volume for making these allocations is defined in section 5.55(d) to include all retail loans made by direct lending associations, their insured System banks and other financing institutions (OFIs) being financed by insured System banks (12 U.S.C. 2277a–4(d)). The statute also requires that a reduction be made from each bank's ratio (numerator and denominator) for the guaranteed portions of government-guaranteed loans similarly on an average daily balance basis for the three-year period. An example of the allocation formula is shown in Exhibit 1.

(c) Use of Allocated Amounts When Reductions Are Required

When the Corporation's actual operating expenses and insurance obligations exceed the estimated amounts used to determine any year's AIRA balances, section 5.55(e)(5) requires AIRA balances to absorb such excess expenses before using other amounts in the Insurance Fund (12 U.S.C. 2277a–4(e)(5)). To the extent reductions are made in AIRA balances to absorb Corporation expenses and actual insurance obligations, each AIRA will be reduced by its proportional amount in accordance with the statute. The same formula used to make allocations of excess Insurance Fund balances shall be used to reduce AIRA balances when necessary. Ten percent of any necessary AIRA reduction will be applied to the FAC stockholder AIRA. The remaining 90 percent will be applied to the System insured banks' AIRAs on the basis of the ratio of each bank's average daily accrual loan principal outstanding for the three prior years divided by the total average daily accrual loan principal outstanding for all System banks.

2. AIRA Accumulation Cycle

Section 5.55(e)(6) permits the Insurance Corporation's Board at its discretion to make payments of AIRA balances to the account holders after a minimum time period (12 U.S.C. 2277a–4(e)(6)). The minimum time period specified is more than 8 years after the date on which the aggregate amount in the Insurance Fund exceeds the secure base amount calculated using quarter-end balances.

The initial starting point for the 8-year period shall be the first calendar quarter-end when the Insurance Fund has attained or exceeded its SBA. The initial attainment occurred during the first quarter of 1998. The first payment would be in the second quarter of 2006.

Should the Insurance Fund drop below the secure base amount at any subsequent quarter-end during the 8-year period, the Corporation's Board may restart the accumulation period. For example, the Insurance Fund might drop below the SBA as a result of rapid growth in insured System debt outstanding, or incurring insurance claims or losses. The Board in its discretion may select an accumulation period, to begin at the next quarter-end when the aggregate in the Insurance Fund again attains the secure base amount. Any alternative accumulation period however, cannot result in any payment before April 2006. The Board will consider the following factors in determining selection of an alternative accumulation period:

(a) The reason that the Insurance Fund dropped below the SBA (i.e. as a result of growth in insured debt vs. an insurance expense at a troubled institution). The current level of the Insurance Fund and the amount of money and time needed to attain the SBA;

(b) The likelihood and probable amount of any losses to the Insurance Fund;

(c) The overall condition of the Farm Credit System, including the level and quality of capital, earnings, asset growth, asset quality, loss allowance levels, asset liability management, as well as the collateral ratios of the insured banks;

(d) The health and prospects for the agricultural economy, including the potential impact of governmental farm policy and the effect of the globalization of agriculture on opportunities and competition for U.S. producers; and

(e) The risks in the financial environment that may cause a problem, even when there is no imminent threat, such as volatility in the level of interest rates, the use of sophisticated investment securities and derivative instruments, and increasing competition from non-System financial institutions.

III. Issues for Later Consideration

Because of multiple factors (including rapid growth and the amount of any insurance obligations) which could affect future AIRA balances and the uncertainty of future payments, the Corporation has deferred consideration of several issues to a date closer to the year 2006. The Board anticipates gaining experience in the administration of the AIRA program over the next few years and expects to have a better basis for determining these issues, which include:

1. Board discretionary authority to limit or restrict AIRA payments; and
2. Calculation of the initial AIRA payment components.

Adopted this 15th day of December, 1999 by order of the Board.

Dated: January 28, 2000.

Nan P. Mitchem,

Acting Secretary to the Board, Farm Credit System Insurance Corporation.

[FR Doc. 00–2334 Filed 2–2–00; 8:45 am]

BILLING CODE 6710–01–P

FEDERAL MARITIME COMMISSION

Notice of Agreement(s) Filed

The Commission hereby gives notice of the filing of the following agreement(s) under the Shipping Act of 1984. Interested parties can review or obtain copies of agreements at the Washington, DC offices of the Commission, 800 North Capitol Street, NW, Room 962. Interested parties may submit comments on an agreement to the Secretary, Federal Maritime Commission, Washington, DC 20573, within 10 days of the date this notice appears in the **Federal Register**.

Agreement No.: 202–000050–069
Title: United States/Australia New Zealand Association
Parties:
Columbus Line
PO Nedlloyd Limited
Australia New Zealand Direct Line
Synopsis: The proposed amendment would delete all Agreement authority except the authority to complete existing service contracts. The amendment would also terminate the Agreement on April 30, 2001, the date on which the last Agreement service contract expires. The amendment further provides that the parties will discontinue use of the Agreement and will operate under the provisions of the United States Australasia Agreement (FMC Agreement No. 202–011677) as of January 26, 2000.

Agreement No.: 203–011075–051
Title: Central America Discussion Agreement
Parties:
Concorde Shipping, Inc.
Global Reefer Carriers Ltd.
Dole Ocean Cargo Express
Crowley Liner Services Inc.
Seaboard Marine, Ltd.

A.P. Moller-Maersk Sealand
Trinity Shipping Line, S.A.
Ecuadorian Line
APL Co. Pte. Ltd.
Nordana Line
P&O Nedlloyd Limited
Lykes Lines Limited

Synopsis: The proposed modification would authorize the parties, by a vote of unanimous less one, to waive the security deposit requirement for new members. The modification also makes conforming and administrative changes.

Agreement No.: 217–011651–002
Title: A.P. Moller-Maersk Sealand/Samskip Space Charter and Sailing Agreement
Parties:
A.P. Moller-Maersk Sealand
Samskip Incorporated

Synopsis: The proposed Amendment restates the basic Agreement; revises Article 5.1 to clarify the terms and conditions applicable to the chartering of space by the parties; adds a new Article 5.2 to state the rights and obligations of the parties in the event of change in vessel or port rotations; and adds a new Article 13 regarding Sea Carrier Initiative agreements.

Agreement No.: 217–011687
Title: CCNI/CMA CGM Space Charter Agreement
Parties:
Compania Chilena de Navegacion Interoceanica S.A. (''CCNI'')
CMA CGM the French Line (''CMA CGM'')

Synopsis: The proposed agreement authorizes CCNI to charter space to CMA CGM in the trade between ports in Hamburg, Rotterdam, Antwerp, Felexstowe, Bilbao, and inland and coastal points served by those ports, on the one hand, and Puerto Rico and inland and coastal points served via Puerto Rico on the other hand. The parties have requested expedited review.

By Order Of the Federal Maritime Commission.

Dated: January 28, 2000.

Bryant L. VanBrakle,

Secretary.

[FR Doc. 00–2308 Filed 2–2–00; 8:45 am]

BILLING CODE 6730–01–P

FEDERAL MARITIME COMMISSION

[Docket No. 00–03]

Inlet Fish Producers, Inc. v. Seal-Land Service, Inc.; Notice of Filing of Complaint and Assignment

Notice is given that a complaint was filed by Inlet Fish Producers, Inc. (''Complainant''), against Sea-Land Service, Inc. (''Respondent''). The complaint was served on January 28, 2000. Complainant alleges that Respondent violated sections 10(b)(2), (b)(4), (b)(6) and (b)(12) of the Shipping Act of 1984, 46 U.S.C. app. section 1709(b)(2), (b)(4), (b)(6) and (b)(12), by not allowing Complainant to subtract ''tare weight'' from the weight of seafood-product cargo for purposes of determining freight charges, while allowing similarly situated shippers to make such a subtraction.

This proceeding has been assigned to the office of Administrative Law Judges. Hearing in this matter, if any is held, shall commence within the time limitations prescribed in 46 CFR 502.61, and only after consideration has been given by the parties and the presiding officer to the use of alternative forms of dispute resolution. The hearing shall include oral testimony and cross-examination in the discretion of the presiding officer only upon proper showing that there are genuine issues of material fact that cannot be resolved on the basis of sworn statements, affidavits, depositions, or other documents or that the nature of the matter in issue is such that an oral hearing and cross-examination are necessary for the development of an adequate record. Pursuant to the further terms of 46 CFR 502.61, the initial decision of the presiding officer in this proceeding shall be issued by January 30, 2001, and the final decision of the Commission shall be issued by May 30, 2001.

Bryant L. VanBrakle,

Secretary.

[FR Doc. 00–2309 Filed 2–2–00; 8:45 am]

BILLING CODE 6730–01–M

FEDERAL MARITIME COMMISSION

Ocean Transportation Intermediary License Applicants

Notice is hereby given that the following applicants have filed with the Federal Maritime Commission applications for licenses as Non-Vessel Operating Common Carrier and Ocean Freight Forwarder—Ocean Transportation Intermediaries pursuant to section 19 of the Shipping Act of 1984 as amended (46 U.S.C. app. 1718 and 46 CFR 515).

Persons knowing of any reason why any of the following applicants should not receive a license are requested to contact the Office of Freight Forwarders, Federal Maritime Commission, Washington, D.C. 20573.

Non-Vessel-Operating Common Carrier Ocean Transportation Intermediary Applicants:

First Express International Corp., 148–36 Guy R. Brewer Blvd., Suite 200, Jamaica, NY 11434, Officer: James Lee, President (Qualifying Individual)

ANA Link, Ltd., 177–25 Rockaway Blvd., Suite 205, Jamaica, NY 11434, Officer: Tal Y. Yo, President (Qualifying Individual)

Non-Vessel-Operating Common Carrier and Ocean Freight Forwarder Transportation Intermediary Applicants:

Mavela Corp., 120 E 11th Street, Los Angeles, CA 90015, Officers: James Ortiz, President (Qualifying Individual), Teresa Ortiz, Secretary

Ocean Freight Forwarders—Ocean Transportation Intermediary Applicants:

McCollister's Transportation Systems, Inc., 1800 Route 130 North, Burlington, NJ 08016, Officers: John M. Roller, Vice President (Qualifying Individual), H. Daniel McCollister, President

Smith Logistics International, Inc., 12300 N.W. 32nd Avenue, Miami, FL 33167, Officers: Igort del Haya, President (Qualifying Individual), Lee Futernick, Vice President

Dated: January 28, 2000.

Bryant L. VanBrakle,

Secretary.

[FR Doc. 00–2307 Filed 2–2–00; 8:45 am]

BILLING CODE 6730–01–P

FEDERAL RESERVE SYSTEM

Agency Information Collection Activities: Proposed Collection; Comment Request

AGENCY: Board of Governors of the Federal Reserve System.

SUMMARY: *Background*—On June 15, 1984, the Office of Management and Budget (OMB) delegated to the Board of Governors of the Federal Reserve System (Board) its approval authority under the Paperwork Reduction Act, as per 5 CFR 1320.16, to approve of and assign OMB control numbers to collections of information requests and requirements conducted or sponsored by the Board under conditions set forth in 5 CFR 1320 Appendix A.1. Board-approved collections of information are incorporated into the official OMB inventory of currently approved collections of information. Copies of the OMB 83–Is and supporting statements and approved collections of information instruments are placed into OMB's

public docket files. The Federal Reserve may not conduct or sponsor, and the respondent is not required to respond to, an information collection that has been extended, revised, or implemented on or after October 1, 1995, unless it displays a currently valid OMB control number.

Request for comment on information collection proposal.

The following information collection, which is being handled under this delegated authority, has received initial Board approval and is hereby published for comment. At the end of the comment period, the proposed information collection, along with an analysis of comments and recommendations received, will be submitted to the Board for final approval under OMB delegated authority. Comments are invited on the following:

a. Whether the proposed collection of information is necessary for the proper performance of the Federal Reserve's functions; including whether the information has practical utility;

b. The accuracy of the Federal Reserve's estimate of the burden of the proposed information collection, including the validity of the methodology and assumptions used;

c. Ways to enhance the quality, utility, and clarity of the information to be collected; and

d. Ways to minimize the burden of information collection on respondents, including through the use of automated collection techniques or other forms of information technology.

DATES: Comments must be submitted on or before April 3, 2000.

ADDRESSES: Comments, which should refer to the OMB control number or agency form number, should be addressed to Jennifer J. Johnson, Secretary, Board of Governors of the Federal Reserve System, 20th and C Streets, N.W., Washington, DC 20551, or delivered to the Board's mail room between 8:45 a.m. and 5:15 p.m., and to the security control room outside of those hours. Both the mail room and the security control room are accessible from the courtyard entrance on 20th Street between Constitution Avenue and C Street, N.W. Comments received may be inspected in room M–P–500 between 9:00 a.m. and 5:00 p.m., except as provided in section 261.14 of the Board's Rules Regarding Availability of Information, 12 CFR 261.14(a).

A copy of the comments may also be submitted to the OMB desk officer for the Board: Alexander T. Hunt, Office of Information and Regulatory Affairs, Office of Management and Budget, New Executive Office Building, Room 3208, Washington, DC 20503.

FOR FURTHER INFORMATION CONTACT: A copy of the proposed form and instructions, the Paperwork Reduction Act Submission (OMB 83–I), supporting statement, and other documents that will be placed into OMB's public docket files once approved may be requested from the agency clearance officer, whose name appears below. Mary M. West, Chief, Financial Reports Section (202–452–3829), Division of Research and Statistics, Board of Governors of the Federal Reserve System, Washington, DC 20551. Telecommunications Device for the Deaf (TDD) users may contact Diane Jenkins, (202–452–3544), Board of Governors of the Federal Reserve System, Washington, DC 20551.

Proposal to approve under OMB delegated authority the extension for three years, without revision, of the following report:

1. *Report title:* The Recordkeeping and Disclosure Requirements in Connection with Regulation Z (Truth in Lending).

Agency form number: unnum Reg Z.

OMB control number: 7100–0199.

Frequency: Event-generated.

Reporters: State member banks.

Annual reporting hours: 1,863,754 hours.

Estimated average hours per response: Open-end credit: initial terms 2.5 minutes, change in terms 1 minute; Periodic statement 45 seconds; Error resolution 15 minutes; Credit and charge card accounts: Advance disclosures 10 seconds, renewal notice 5 seconds, insurance notice 15 seconds; Home equity plans: advance disclosure 2 minutes, change in terms 2 minutes; Closed-end credit disclosures 6.4 minutes; Advertising 30 minutes.

Number of respondents: 988. Small businesses are affected.

General description of report: Title I of the Consumer Credit Protection Act (15 U.S.C. 1601 *et seq.*) authorizes the Board to issue regulations to carry out the provisions of the Consumer Credit Protection Act (15 U.S.C. 1604(a)). Since the Federal Reserve does not collect any information, no issue of confidentiality arises. Transaction-or account-specific disclosures and billing error allegations are not publicly available and are confidential between the creditor and consumer.

Abstract: Regulation Z (12 CFR Part 226) implements the Truth in Lending Act (15 USC 1601 *et seq.*). The act and regulation ensure adequate disclosure of the costs and terms of credit to consumers on an event-generated basis. For open-end credit (revolving credit accounts), creditors are required to disclose information about the initial costs and terms and to provide periodic statements of account activity, notices of change in terms, and statements of rights concerning billing error procedures. The regulation also requires specific types of disclosures for credit and charge card accounts, and home equity plans. For closed-end loans (such as mortgage and installment loans) cost disclosures are required to be provided prior to consummation. Specific products trigger special disclosures, such as reverse mortgages, certain variable rate loans, and certain mortgages with rates and fees above a specific amount. Regulation Z also contains rules concerning credit advertising. Creditors are required to retain records as evidence of compliance with Regulation Z for twenty-four months (subpart D, section 226.25).

Board of Governors of the Federal Reserve System, January 28, 2000.

Jennifer J. Johnson,

Secretary of the Board.

[FR Doc. 00–2341 Filed 2–2–00; 8:45 am]

BILLING CODE 6210–01–P

FEDERAL RESERVE SYSTEM

Formations of, Acquisitions by, and Mergers of Bank Holding Companies

The companies listed in this notice have applied to the Board for approval, pursuant to the Bank Holding Company Act of 1956 (12 U.S.C. 1841 *et seq.*) (BHC Act), Regulation Y (12 CFR Part 225), and all other applicable statutes and regulations to become a bank holding company and/or to acquire the assets or the ownership of, control of, or the power to vote shares of a bank or bank holding company and all of the banks and nonbanking companies owned by the bank holding company, including the companies listed below.

The applications listed below, as well as other related filings required by the Board, are available for immediate inspection at the Federal Reserve Bank indicated. The application also will be available for inspection at the offices of the Board of Governors. Interested persons may express their views in writing on the standards enumerated in the BHC Act (12 U.S.C. 1842(c)). If the proposal also involves the acquisition of a nonbanking company, the review also includes whether the acquisition of the nonbanking company complies with the standards in section 4 of the BHC Act (12 U.S.C. 1843). Unless otherwise noted, nonbanking activities will be conducted throughout the United States.

Unless otherwise noted, comments regarding each of these applications must be received at the Reserve Bank indicated or the offices of the Board of

Governors not later than February 28, 2000.

A. Federal Reserve Bank of Richmond (A. Linwood Gill, III, Vice President) 701 East Byrd Street, Richmond, Virginia 23261–4528:

1. First Charter Corporation, Concord, North Carolina; to merge with Carolina First BancShares, Inc., Lincolnton, North Carolina, and thereby indirectly acquire Community Bank and Trust Company, Rutherfordton, North Carolina; Cabarrus Bank of North Carolina, Concord, North Carolina; Lincoln Bank of North Carolina, Lincolnton, North Carolina. Applicant also will acquire shares of First Gaston Bank of North Carolina, Gastonia, North Carolina.

B. Federal Reserve Bank of St. Louis (Randall C. Sumner, Vice President) 411 Locust Street, St. Louis, Missouri 63166–2034:

1. Branson Bancshares, Inc., Branson, Missouri; to become a bank holding company by acquiring 100 percent of the voting shares of Branson Bank, Branson, Missouri (in organization).

2. Maries County Bancorp, Inc., Vienna, Missouri; to acquire 9.3 percent of the voting shares of Branson Bancshares, Inc., Branson, Missouri, and thereby indirectly acquire Branson Bank, Branson, Missouri a de novo bank).

Board of Governors of the Federal Reserve System, January 28, 2000.

Robert deV. Frierson,

Associate Secretary of the Board.

[FR Doc. 00–2360 Filed 2–2–00; 8:45 am]

BILLING CODE 6210–01–P

FEDERAL RESERVE SYSTEM

Notice of Proposals To Engage in Permissible Nonbanking Activities or to Acquire Companies That Are Engaged in Permissible Nonbanking Activities

The companies listed in this notice have given notice under section 4 of the Bank Holding Company Act (12 U.S.C. 1843) (BHC Act) and Regulation Y, (12 CFR Part 225) to engage de novo, or to acquire or control voting securities or assets of a company, including the companies listed below, that engages either directly or through a subsidiary or other company, in a nonbanking activity that is listed in § 225.28 of Regulation Y (12 CFR 225.28) or that the Board has determined by Order to be closely related to banking and permissible for bank holding companies. Unless otherwise noted, these activities will be conducted throughout the United States.

Each notice is available for inspection at the Federal Reserve Bank indicated. The notice also will be available for inspection at the offices of the Board of Governors. Interested persons may express their views in writing on the question whether the proposal complies with the standards of section 4 of the BHC Act.

Unless otherwise noted, comments regarding the applications must be received at the Reserve Bank indicated or the offices of the Board of Governors not later than February 18, 2000.

A. Federal Reserve Bank of Atlanta (Lois Berthaume, Vice President) 104 Marietta Street, N.W., Atlanta, Georgia 30303–2713:

1. Exchange Bankshares, Inc., Milledgeville, Georgia; to acquire Exchange Insurance Agency, Inc., Gray, Georgia, and thereby engage in insurance agency activities in a town of less than 5,000, pursuant to § 225.28(b)(11)(iii) of Regulation Y.

B. Federal Reserve Bank of St. Louis (Randall C. Sumner, Vice President) 411 Locust Street, St. Louis, Missouri 63166–2034:

1. National Commerce Bancorporation, Memphis, Tennessee; to acquire through its subsidiary, TransPlatinum Service Corp., Nashville, Tennessee, Fleet One, L.L.C., Nashville, Tennessee, and thereby engage in data processing and data transmission activities, pursuant to § 225.28(b)(14) of Regulation Y.

Board of Governors of the Federal Reserve System, January 28, 2000.

Robert deV. Frierson,

Associate Secretary of the Board.

[FR Doc. 00–2359 Filed 2–2–00; 8:45 am]

BILLING CODE 6210–01–P

DEPARTMENT OF HEALTH AND HUMAN SERVICES

Office of the Secretary

Request and Extension of Deadline for Nominations for the Secretary's Advisory Committee on Minority Health

AGENCY: Office of Public Health and Science, Office of Minority Health, HHS.

ACTION: Notice—Extension of Deadline.

Authority: Section 1707(c) of the Public Health Service Act, as amended (42 U.S.C. 300u–6(c)); Federal Advisory Committee Act (5 U.S.C. appendix 2).

SUMMARY: The Secretary, Department of Health and Human Services, signed the charter establishing the Committee on Minority Health on September 17, 1999. Unless renewed prior to its expiration, the Committee will terminate on September 22, 2001. It is the function of the Committee to advise and make recommendations to the Secretary on improving the health of racial and ethnic minority groups and development of goals and specific program activities. This notice requests and extends the deadline for submission of nominations for membership on the Committee.

DATES: Nominations for members must be received no later than 5:00 P.M. on March 6, 2000.

ADDRESSES: You may mail or deliver nominations to the following address: Monica Farrar, Division of Management Operations, Office of Minority Health, 5515 Security Lane, Suite 1000, Rockville, MD 20852. Nominations will not be accepted by e-mail nor by facsimile.

A request for a copy of the Secretary's charter for the Advisory Committee should be submitted to: Joan Jacobs, Office of Minority Health, 5515 Security Lane, Suite 1000, Rockville, MD 20852. The charter can also be downloaded from the Office of Minority Health Resource Center web site at http://www.omhrc.gov.

FOR FURTHER INFORMATION CONTACT: Joan Jacobs, (301) 443–9923.

SUPPLEMENTARY INFORMATION:

I. Background and Legislative Authority

Section 1707(c) of the Public Health Service Act directs the Secretary to establish the Advisory Committee on Minority Health. The Committee is also governed by the Federal Advisory Committee Act (5 U.S.C. Appendix 2), which sets forth standards for the formulation and use of advisory committees.

The Advisory Committee shall advise the Secretary on improving the health of racial and ethnic minorities and developing goals and specific program activities. These activities include, but are not limited, to the following:

(1) Establishing short-range and long-range goals and objectives and coordinate all other activities within the Public Health Service that relate to disease prevention, health promotion, service delivery, and research concerning such individuals.

(2) Entering into interagency agreements with other agencies of the Public Health Service.

(3) Supporting research, demonstrations, and evaluations to test new and innovative models.

(4) Increasing knowledge and understanding of health risk factors.

(5) Developing mechanisms that support better information dissemination, education, prevention, and service delivery to individuals from disadvantaged backgrounds, including individuals who are members of racial and ethnic minority groups.

(6) Ensuring that the National Center for Health Statistics, Centers for Disease Control and Prevention, collects data on the health status of each minority group.

(7) With respect to individuals who lack proficiency in speaking the English language, entering into contracts with public and nonprofit private providers of primary health services for the purpose of increasing the access of individuals to such services by developing and carrying out programs to provide bilingual or interpretive services.

(8) Supporting a national minority health resource center to carry out the following:

(A) Facilitate the exchange of information regarding matters relating to health information and health promotion, preventive health services, and education in the appropriate use of health care;

(B) Facilitate access to information;

(C) Assist in the analysis of issues and problems relating to such matters;

(D) Provide technical assistance with respect to the exchange of such information (including facilitating the development of materials of such technical assistance).

(9) Carrying out programs to improve access to health care services for individuals with limited proficiency in speaking the English language. Activities under the preceding sentence shall include developing and evaluating model projects.

II. Nominations

The Office of Minority Health (OMH) is requesting nominations for voting members to serve on the Advisory Committee. The Committee is to consist of 12 voting members appointed by the Secretary from among racial and ethnic minorities, defined as Black or African American, Hispanic/Latino, American Indian/Alaska Native, Asian American, and Native Hawaiian or Pacific Islander, who have expertise regarding issues of minority health. The racial and ethnic minority groups will be equally represented among the voting members. The membership will also be diverse in terms of gender, HIV status, disability, age, culture, sexual orientation, geography, and points of view. Employees or officers of the Federal Government may not serve as voting members, except that the Secretary may appoint employees of the DHHS to serve as ex-officio, non-voting members.

OMH is seeking nominations of persons from a wide-array of fields including but not limited to: public health and medicine, health administration and financing, behavioral and social sciences, immigration and rural health, health law and economics, cultural and linguistic competency, and biomedical ethics and human rights. Demonstrated expertise in minority health, in subject areas such as access to care, data collection and analysis, health professions development, cultural competency, and eliminating disparities in cancer, cardiovascular diseases, infant mortality, HIV infection/AIDS, child and adult immunization, diabetes, substance abuse, homicide, suicide, unintentional injuries, and other diseases and health conditions is also required.

Nominations must state that the nominee is willing to serve as a member of the Advisory Committee and appears to have no conflict of interest that would preclude membership. Candidates will be asked to provide detailed information concerning such matters as financial holdings, consultancies, and research grants or contracts to permit evaluation of possible sources of conflict of interest.

Members are appointed for a term of four years except that the Secretary shall initially appoint a portion of members to one, two, and three year terms. The Chair, selected by the Secretary from among the voting members of the Committee, will serve a term of two years. Committee members will be compensated for the time spent in Committee meetings (including travel time) as well as per diem costs.

Any interested person may nominate one or more qualified persons. Self-nominations will also be accepted.

Nomination forms may be obtained from the Office of Minority Health Resource Center, P.O. Box 37337. Washington, D.C. 20013–7337, telephone 1–800–444–6472, TDD 301–230–7199, e-mail: *info@omhrc.gov.* Nomination forms may also be downloaded from the Office of Minority Health Resource Center web site, *http://www.omhrc.gov.* All nominations and curricula vitae for the Advisory Committee should be set to Monica Farrar at the address in this notice.

Dated: January 27, 2000.

Nathan Stinson, Jr.,

Deputy Assistant Secretary for Minority Health.

[FR Doc. 00–2312 Filed 2–2–00; 8:45 am]

BILLING CODE 4160–17–P

DEPARTMENT OF HEALTH AND HUMAN SERVICES

Centers for Disease Control and Prevention

[60Day–00–22]

Proposed Data Collections Submitted for Public Comment and Recommendations

In compliance with the requirement of Section 3506(c)(2)(A) of the Paperwork Reduction Act of 1995 for opportunity for public comment on proposed data collection projects, the Centers for Disease Control and Prevention (CDC) will publish periodic summaries of proposed projects. To request more information on the proposed projects or to obtain a copy of the data collection plans and instruments, call the CDC Reports Clearance Officer on (404) 639–7090.

Comments are invited on: (a) Whether the proposed collection of information is necessary for the proper performance of the functions of the agency, including whether the information shall have practical utility; (b) the accuracy of the agency's estimate of the burden of the proposed collection of information; (c) ways to enhance the quality, utility, and clarity of the information to be collected; and (d) ways to minimize the burden of the collection of information on respondents, including through the use of automated collection techniques for other forms of information technology. Send comments to Seleda Perryman, CDC Assistance Reports Clearance Officer, 1600 Clifton Road, MS–D24, Atlanta, GA 30333. Written comments should be received within 60 days of this notice.

Proposed Project

Implementation of data collection described in Evaluation Guidance for CDC Funded Health Department HIV Prevention Programs To Be Implemented From 2000 to 2003—New—The Centers for Disease Control and Prevention (CDC), National Center for HIV, STD, and TB Prevention (NCHSTP) proposes a collection of standardized HIV evaluation data from health department grantees to ensure delivery of the best possible HIV prevention services. The CDC needs standardized evaluation data from

health department grantees for the following reasons: (1) To determine the extent to which HIV prevention efforts have contributed to a reduction in HIV transmission, (2) to improve programs to better meet that goal (3) to help focus technical assistance and support and (4) to be accountable to stakeholders by informing them of progress made in HIV prevention nationwide.

CDC formed evaluation workgroups and panels consisting of expert evaluation consultants, health department representatives, representatives of the National Alliance of State and Territorial AIDS Directors, and CDC staff in order to assess and summarize existing health department evaluation data collections. An extensive review of published and unpublished evaluation data led to the conclusion that even though there is information suggesting a very large number of Americans who receive HIV prevention services, but there were no standardized and scientifically valid evaluation data on HIV prevention services. Based on these findings, the workgroups and panels have concluded that there is a need to monitor intervention plans, implementation, and outcomes on the national, state, and local levels for public health management purposes.

CDC and its prevention partners have specifically identified the types of standardized evaluation data they need to be accountable for the use of federal funds and to conduct systematic analysis of HIV prevention to improve policies and programs. Generally, evaluation data that are needed (but not yet available at the national level) include the types and quality of HIV prevention interventions provided by CDC health department grantees and their grantees, the characteristics of clients targeted and reached by the interventions, and the effects of interventions on client behavior and HIV transmission.

In 1998, the 5-year Cooperative Agreement with state and territorial health departments in CDC Program Announcement 99004 HIV Prevention Projects specified health department evaluation activities and referenced the proposed data collection. The announcement states that the Evaluation Guidance is designed to assist grantees in implementing evaluation activities listed in announcement 99004. Below is a listing of these evaluation activities. In addition, the proposed evaluation data collection forms are sub-categorized under each 99004 evaluation activity.

(1) Evaluating HIV Prevention Community Planning
—CPG Membership Survey
—Table of Estimated Expenditures Form

(2) Designing and Evaluating Intervention Plans
—Aggregate Intervention Plan Data Collection Form for the following types of interventions:
Individual-Level
Group-Level
Outreach
Prevention Case Management
Partner Counseling and Referral Services Health Communication/ Public Information Other Interventions

(3) Monitoring and Evaluating the Implementation of HIV Prevention Programs
—Aggregate Process Evaluation Data Collection Form for the following types of intervention:
Individual-Level
Group-Level
Outreach
Prevention Case Management
Partner Counseling and Referral Services Health Communication/ Public Information Other Interventions

(4) Evaluating Linkages between the Comprehensive HIV Prevention Plan, CDC funding application and resource allocation
—Data Collection From for Linkages between the CDC funding application and the Comprehensive HIV Prevention Plan
—Data Collection Form for Linkages between Resource Allocation and the Comprehensive HIV Prevention Plan

Ten health departments pilot tested the instruments. The following table was developed from that experience.

Respondents	Number of respondents	Number of responses/respondent	Average burden per response (in hours)	Total burden (in hours)
Health department grantees.	390	18 (total number of data collection forms).	1.0	7020
Total				7020

The CDC anticipates 2 persons per health department jurisdiction (total # of jurisdictions = 65) to prepare and submit Evaluation Guidance data collection forms annually for the next 3 years (65 × 2 = 130 respondents; 130 × 3 years = 390 total respondents.) Therefore, the total response burden is estimated at 7020 hours (309 × 18 forms.) The total cost to respondents is estimated at $140,400 assuming a working wage for assigned health department personnel of $20.00 over the 3-year period.

Dated: January 28, 2000.

Nancy Cheal,

Acting Associate Director for Policy, Planning, and Evaluation, Centers for Disease Control and Prevention (CDC).

[FR Doc. 00–2384 Filed 2–2–00; 8:45 am]

BILLING CODE 4163–18–M

DEPARTMENT OF HEALTH AND HUMAN SERVICES

Food and Drug Administration

[Docket No. 99D–0236]

Guidance for Industry on Skin Irritation and Sensitization Testing of Generic Transdermal Drug Products; Availability

AGENCY: Food and Drug Administration, HHS.

ACTION: Notice.

SUMMARY: The Food and Drug Administration (FDA) is announcing the availability of a guidance for industry entitled ''Skin Irritation and Sensitization Testing of Generic Transdermal Drug Products.'' This guidance provides assistance to sponsors of abbreviated new drug applications (ANDA's) by recommending study designs and scoring systems that can be used to test skin irritation and sensitization during development of transdermal products. Skin irritation and sensitization should be assessed because the condition of the skin may affect the absorption of a drug from a transdermal system, thus affecting the efficacy or safety of the product. This guidance does not address the actual bioequivalence studies

necessary for a particular transdermal product.

DATES: Submit written comments on agency guidances at any time.

ADDRESSES: Copies of this guidance for industry are available on the Internet at http://www.fda.gov/cder/guidance/index.htm. Submit written requests for single copies of the guidance to the Drug Information Branch (HFD–210), Center for Drug Evaluation and Research, Food and Drug Administration, 5600 Fishers Lane, Rockville, MD 20857. Send one self-addressed adhesive label to assist that office in processing your requests. Submit written comments on the guidance to the Dockets Management Branch (HFA–305), Food and Drug Administration, 5630 Fishers Lane, rm. 1061, Rockville, MD 20852.

FOR FURTHER INFORMATION CONTACT: Mary M. Fanning, Center for Drug Evaluation and Research (HFD–600), Food and Drug Administration, 5600 Fishers Lane, Rockville, MD 20857, 301–827–5845.

SUPPLEMENTARY INFORMATION: FDA is announcing the availability of a guidance for industry entitled ''Skin Irritation and Sensitization Testing of Generic Transdermal Drug Products.'' Transdermal products have properties that may lead to skin irritation and/or sensitization. The delivery system, or the system in conjunction with the drug substance, may cause these reactions. Skin irritation and skin sensitization studies are designed to detect irritation and sensitization under conditions of maximal stress and may be used during the assessment of transdermal drug product for ANDA's.

A draft guidance entitled ''Skin Irritation and Sensitization Testing of Generic Transdermal Drug Products'' was published in the **Federal Register** of February 26, 1999 (64 FR 9516). Eight comments were received between February and April of 1999, and this guidance has been revised after careful consideration of those comments.

This Level 1 guidance is being issued consistent with FDA's good guidance practices (62 FR 8961, February 27, 1997). The guidance represents the agency's current thinking on skin irritation and sensitization testing of generic transdermal drug products. It does not create or confer any rights for or on any person and does not operate to bind FDA or the public. An alternative approach may be used if such approach satisfies the requirements of the applicable statutes, regulations, or both.

Interested persons may, at any time, submit written comments on the guidance to the Dockets Management Branch (address above). Two copies of any comments are to be submitted, except that individuals may submit one copy. Comments are to be identified with the docket number found in brackets in the heading of this document. The guidance and received comments are available for public examination in the Dockets Management Branch between 9 a.m. and 4 p.m., Monday through Friday.

Dated: January 24, 2000.

Margaret M. Dotzel,

Acting Associate Commissioner for Policy.

[FR Doc. 00–2299 Filed 2–2–00; 8:45 am]

BILLING CODE 4160–01–F

DEPARTMENT OF HEALTH AND HUMAN SERVICES

Health Care Financing Administration

[Document Identifier: HCFA–R–1500]

Agency Information Collection Activities: Proposed Collection; Comment Request

AGENCY: Health Care Financing Administration, HHS.

In compliance with the requirement of section 3506(c)(2)(A) of the Paperwork Reduction Act of 1995, the Health Care Financing Administration (HCFA), Department of Health and Human Services, is publishing the following summary of proposed collections for public comment. Interested persons are invited to send comments regarding this burden estimate or any other aspect of this collection of information, including any of the following subjects: (1) The necessity and utility of the proposed information collection for the proper performance of the agency's functions; (2) the accuracy of the estimated burden; (3) ways to enhance the quality, utility, and clarity of the information to be collected; and (4) the use of automated collection techniques or other forms of information technology to minimize the information collection burden.

Type of Information Collection Request: Extension of a currently approved collection; *Title of Information Collection:* Health Insurance Common Claims Forms and Supporting Regulations in 42 CFR 414.40, 424.32, and 424.44; *Form No.:* HCFA–1500, 1490U, and 1490S (OMB # 0938–0008); *Use:* This form is a standardized form for use in the Medicare/Medicaid programs to apply for reimbursement for covered services; *Frequency:* On occasion; *Affected Public:* Business or other for-profit, Not-for-profit institutions; *Number of Respondents:* 1, 321, 417; *Total Annual Responses:* 717,876,097; *Total Annual Hours:* 44,460,460.

To obtain copies of the supporting statement and any related forms for the proposed paperwork collections referenced above, access HCFA's Web Site address at http://www.hcfa.gov/regs/prdact95.htm, or E-mail your request, including your address, phone number, OMB number, and HCFA document identifier, to Paperwork@hcfa.gov, or call the Reports Clearance Office on (410) 786–1326. Written comments and recommendations for the proposed information collections must be mailed within 60 days of this notice directly to the HCFA Paperwork Clearance Officer designated at the following address: HCFA, Office of Information Services, Security and Standards Group, Division of HCFA Enterprise Standards, Attention: Julie Brown, Room N2–14–26, 7500 Security Boulevard, Baltimore, Maryland 21244–1850.

Dated: January 24, 2000.

John P. Burke,

Reports Clearance Officer, HCFA Office of Information Services, Security and Standards Group, Division of HCFA Enterprise Standards.

[FR Doc. 00–2425 Filed 2–2–00; 8:45 am]

BILLING CODE 4120–03–M

DEPARTMENT OF HEALTH AND HUMAN SERVICES

Health Care Financing Administration

[Document Identifier: HCFA–1957]

Agency Information Collection Activities: Proposed Collection; Comment Request

AGENCY: Health Care Financing Administration, HHS.

In compliance with the requirement of section 3506(c)(2)(A) of the Paperwork Reduction Act of 1995, the Health Care Financing Administration (HCFA), Department of Health and Human Services, is publishing the following summary of proposed collections for public comment. Interested persons are invited to send comments regarding this burden estimate or any other aspect of this collection of information, including any of the following subjects: (1) The necessity and utility of the proposed information collection for the proper performance of the agency's functions; (2) the accuracy of the estimated burden; (3) ways to enhance the quality, utility, and clarity of the information to be collected; and (4) the use of

automated collection techniques or other forms of information technology to minimize the information collection burden.

Type of Information Collection Request: Extension of a currently approved collection;

Title of Information Collection: SSO Report of State Buy In Problems and Supporting Regulations in 42 CFR 407.40;

Form No.: HCFA–1957 (0938–0035);

Use: The HCFA–1957 is issued to assist with communications between the Social Security District Offices, Medicaid State Agencies and HCFA Central Offices in the resolution of beneficiary complaints, regarding entitlement under state buy-ins. It is used when a problem arises which cannot be resolved thru normal data exchange.

Frequency: On occasion;

Affected Public: State, Local or Tribal Government, and Individuals or Households;

Number of Respondents: 2,000;

Total Annual Responses: 2,000;

Total Annual Hours: 716.

To obtain copies of the supporting statement and any related forms for the proposed paperwork collections referenced above, access HCFA's Web Site address at http://www.hcfa.gov/regs/prdact95.htm, or E-mail your request, including your address, phone number, OMB number, and HCFA document identifier, to Paperwork@hcfa.gov, or call the Reports Clearance Office on (410) 786–1326. Written comments and recommendations for the proposed information collections must be mailed within 60 days of this notice directly to the HCFA Paperwork Clearance Officer designated at the following address: HCFA, Office of Information Services, Security and Standards Group, Division of HCFA Enterprise Standards, Attention: Dawn Willinghan, Room N2–14–26, 7500 Security Boulevard, Baltimore, Maryland 21244–1850.

Dated: January 24, 2000.

John P. Burke III,

HCFA Reports Clearance Officer, HCFA Office of Information Services, Security and Standards Group, Division of HCFA Enterprise Standards.

[FR Doc. 00–2427 Filed 2–2–00; 8:45 am]

BILLING CODE 4120–03–P

DEPARTMENT OF HEALTH AND HUMAN SERVICES

National Institutes of Health

Office of Loan Repayment and Scholarship, Submission for OMB Review; Comment Request; National Institutes of Health Undergraduate Scholarship Program for Individuals From Disadvantaged Backgrounds

SUMMARY: In compliance with the requirement of Section 3506(c)(2)(A) of the Paperwork Reduction Act of 1995, the Office of Loan Repayment and Scholarship, the National Institutes of Health (NIH), has submitted to the Office of Management and Budget (OMB) a request to review and approve the information collection listed below. This proposed information collection was previously published in the **Federal Register** on July 26, 1999, and allowed 60 days for public comment. One request for a copy of the data collection instrument was received and fulfilled. The purpose of this notice is to allow an additional 30 days for public comment. The National Institutes of Health may not conduct or sponsor, and the respondent is not required to respond to, an information collection that has been extended, revised, or implemented on or after October 1, 1995, unless it displays a currently valid OMB control number.

Proposed Collection: Title: National Institutes of Health Undergraduate Scholarship Program for Individuals from Disadvantaged Backgrounds (UGSP). *Type of Information Collection Request:* Revision of a previously approved collection (OMB No. 0925–0438, expiration date February 29, 2000). *Form Numbers:* NIH 2762–1, NIH 2762–2, NIH 2762–3, and NIH 2762–4. *Need and Use of Information Collection:* The NIH makes available scholarship awards to students from disadvantaged backgrounds who are committed to careers in biomedical research. The scholarships pay for tuition and reasonable educational and living expenses up to $20,000 per academic year at an accredited undergraduate institution. In return, for each year of scholarship support, the recipient is obligated to serve as a full-time paid employee in an NIH research laboratory for 10 consecutive weeks during the months of June through August and for 1 year after graduation. If the recipient pursues a post-graduate degree (graduate, medical, dental, or veterinarian school), the post-graduation service obligation may be deferred with the approval of the Secretary, Department of Health and Human Services. The information proposed for collection will be used by the Office of Loan Repayment and Scholarship to determine an applicant's eligibility for participation in the UGSP. The UGSP is authorized by Section 487D of the Public Health Service (PHS) Act (42 USC 288–2), as amended by the NIH Revitalization Act of 1993 (Publ. L. 103–43). *Frequency of Response:* Initial application and annual renewal application. *Affected Public:* Applicants (high school or undergraduate students), recommenders, undergraduate institution financial aid staff. The annual reporting burden estimates are as follows:

Type of respondents	Estimated number of respondents	Estimated number of responses per respondent	Average burden hours per response	Estimated total annual burden hours requested
Applicant	250	1.0	3.167	791.75
Recommender	750	1.0	1.0	750.00
Financial Aid Staff	250	1.0	.5	125.00
Totals	1,250			1,666.75

The annualized cost to respondents is estimated at $29,263.81. There are no capital costs, operating costs, or maintenance costs to report.

Request for comments: Written comments and/or suggestions from the public and affected agencies should address one or more of the following points: (1) Whether the proposed collection of information is necessary for the proper performance of the function of the agency, including whether the information will have practical utility; (2) the accuracy of the agency's estimate of the burden of the proposed collection of information, including the validity of the methodology and assumptions used; (3)

ways to enhance the quality, utility, and clarity of the information to be collected; and (4) ways to minimize the burden of the collection of information on those who are to respond, including the use of appropriate automated, electronic, mechanical, or other technological collection techniques or other forms of information technology.

Direct Comments to OMB: Written comments and/or suggestions regarding the item(s) contained in this notice, especially regarding the estimated public burden and associated response time, should be directed to the: Office of Management and Budget, Office of Regulatory Affairs, New Executive Office Building, Room 10235, Washington, DC 20503, Attention: Desk Officer for NIH. To request more information on the proposed project or to obtain a copy of the data collection plans and instruments, contact: Marc S. Horowitz, J.D., Director, Office of Loan Repayment and Scholarship, National Institutes of Health, 7550 Wisconsin Avenue, Room 604, Bethesda, Maryland 20892–9121. Mr. Horowitz can be contacted via e-mail at MHorowitz@nih.gov or by calling (301) 402–5666 (not a toll-free number).

Comments Due Date: Comments regarding this information collection are best assured of having their full effect if received on or before March 6, 2000.

Dated: January 27, 2000.

Ruth L. Kirschstein,

Acting Director, NIH.

[FR Doc. 00–2351 Filed 2–2–00; 8:45 am]

BILLING CODE 4140–01–M

DEPARTMENT OF HEALTH AND HUMAN SERVICES

National Institutes of Health

Submission for OMB Review; Comment Request; Evaluation of the National Institute on Deafness and Other Communication Disorders Partnership Program

SUMMARY: Under the provisions of section 3506(c)(2)(A) of the Paperwork Reduction Act of 1995, the National Institute on Deafness and Other Communication Disorders (NIDCD), the National Institutes of Health (NIH), has submitted to the Office of Management and Budget (OMB) a request to review and approve the information collection listed below. The proposed information collection was previously published in the **Federal Register** on May 11, 1999 (64 FR 25360) and allowed 60 days for public comment. No comments were received. The purpose of this notice is to allow an additional 30 days for public comment.

5 CFR 1320.5 (General requirements) Reporting and Recordkeeping Requirements: Final Rule requires that the agency inform the potential persons who are to respond to the collection of information that such persons are not required to respond unless it displays a currently valid OMB control number.

Proposed Collection: Title: Evaluation of the NIDCD Partnership Program. *Type of Information Collection Request:* NEW. *Need and Use of Information Collection:* The NIDCD was established to support biomedical and behavioral research and research training in hearing, smell, balance, taste, voice, speech and language. Although minorities and women will dominate the work force within the next decade, both groups are under represented in the science and health professional field. Because of this concern, the NIDCD, with assistance from the Office of Research on Minority Health, established the Partnership Program in 1994 to increase the number of minority scientists and health care professionals doing research on communication and communication disorders. The proposed survey will yield data about: (1) reasons for participation in the program; (2) satisfaction of participants with the program and (3) how participation in the program has lead to the pursuit of a career in the health field. This survey will track the Partnership Program's success at increasing the number of women and minorities who are scientists. *Frequency of Response:* One. *Affected Public:* Individuals. *Type of Respondent:* Partnership Program Participants. The annual reporting burden is as follows: *Estimated Number of Respondents:* 76; *Estimated Number of Responses per Respondent:* 1; *Average Burden Hours Per Response:* 0.5; and *Estimated Total Annual Burden Hours Requested:* 38. The annualized cost to respondents is estimated at: $380. There are no Capital Costs to report. There are no Operating or Maintenance Costs to report.

Note: The following table is acceptable for the Respondent and Burden Estimate Information, if appropriate, instead of the text as shown above.

Type of respondents	Estimated number of respondents	Estimated number of responses per respondent	Average burden hours per response	Estimated total annual burden hours requested
Initial program participant survey	16	1	0.5	8
Follow up survey of participant	60	1	0.5	30
Total	76			38

Request for Comments: Written comments and/or suggestions from the public and affected agencies are invited on one or more of the following points: (1) Whether the proposed collection of information is necessary for fulfillment of the NIDCD mission, including whether the information will have practical utility; (2) the accuracy of the estimate of the burden of the proposed data collection, including the validity of the methodology; (3) ways to enhance the quality, utility, and clarity of the data collection and (4) ways to minimize the burden of the collection of information on the respondents, including appropriate use of automated collection techniques and information technology.

Direct Comments To OMB: Written comments and/or suggestions regarding the item(s) contained in this notice, especially regarding the estimated public burden and associated response time, should be directed to the Office of Management and Budget, Office of Regulatory Affairs, New Executive Office Building, Room 10235, Washington, D.C. 20503, Attention: Desk Officer for NIH. To request more information on the proposed project or to obtain a copy of the data collection plans and instruments, contact: Mrs. Kay C. Johnson-Graham, EEO Officer, Office of Equal Employment Opportunity, NIDCD, NIH, Building 31, Room 3C08, 31 Center Drive, Bethesda, MD 20892, or call non-toll-free number (301) 402–6415 or E-mail your request,

including your address to: <kay__johnson@ms.nidcd.nih.gov>.

Comments Due Date: Comments regarding this information collection are best assured of having their full effect if received on or before March 6, 2000.

Dated: January 28, 2000.

David Kerr,

Executive Officer, National Institute on Deafness and Other Communication Disorders

[FR Doc. 00–2352 Filed 2–2–00; 8:45 am]

BILLING CODE 4140–01–P

DEPARTMENT OF HEALTH AND HUMAN SERVICES

National Institutes of Health

Office of the Director, National Institutes of Health; Notice of Meeting

Pursuant to section 10(a) of the Federal Advisory Committee Act, as amended (5 U.S.C. Appendix 2), notice is hereby given of a meeting of the Advisory Committee on Research on Minority Health.

The meeting will be open to the public, with attendance limited to space available. Individuals who plan to attend and need special assistance, such as sign language interpretation or other reasonable accommodations, should notify the Contact Person listed below in advance of the meeting.

Name of Committee: Advisory Committee on Research on Minority Health.

Date: February 11, 2000.

Time: 8:30 a.m. to 5:00 p.m.

Agenda: Agenda items include: (1) a report by the Associate Director, ORMH; (2) FY'00 minority health initiatives; (3) report of the trans–NIH working group on domestic health disparities; and (4) other business of the Committee.

Place: Natcher Building, 45 Center Drive, Conference Rooms E1/E2, Bethesda, MD 20892.

Contact Person: Jean L. Flagg-Newton, Special Assistant to the Associate Director, Office of Research on Minority Health, National Institutes of Health, Building 1, Room 256, 9000 Rockville Pike, Bethesda, MD 20892, (301) 402–2518.

(Catalogue of Federal Domestic Assistance Program Nos. 93.14, Intramural Research Training Award; 93.187, Undergraduate Scholarship Program for Individuals from Disadvantaged Backgrounds; 93.22, Clinical Research Loan Repayment Program for Individuals from Disadvantaged Backgrounds; 93.232, Loan Repayment Program for Research Generally; 93.39, Academic Research Enhancement Award; 93.936, NIH Acquired Immunodeficiency Syndrome Research Loan Repayment Program, National Institutes of Health, HHS)

Dated: January 24, 2000.

LaVerne Y. Stringfield,

Director, Office of Federal Advisory Committee Policy.

[FR Doc. 00–2350 Filed 2–2–00; 8:45 am]

BILLING CODE 4140–01–M

DEPARTMENT OF HEALTH AND HUMAN SERVICES

National Institutes of Health

National Institute on Alcohol Abuse and Alcoholism; Notice of Closed Meeting

Pursuant to section 10(d) of the Federal Advisory Committee Act, as amended (5 U.S.C. Appendix 2), notice is hereby given of the following meeting.

The meeting will be closed to the public in accordance with the provisions set forth in sections 552b(c)(4) and 552b(c)(6), Title 5 U.S.C., as amended. The grant applications and/or contract proposals and the discussions could disclose confidential trade secrets or commercial property such as patentable material, and personal information concerning individuals associated with the grant applications and/or contract proposals, the disclosure of which would constitute a clearly unwarranted invasion of personal privacy.

Name of Committee: National Institute on Alcohol Abuse and Alcoholism Initial Review Group Health Services Research Review Subcommittee.

Date: February 18, 2000.

Time: 8:30 a.m. to 5 p.m.

Agenda: To review and evaluate grant applications.

Place: Hyatt Regency, One Metro Center, Bethesda, MD 20814.

Contact Person: Elsie Taylor, Scientific Review Administrator, Extramural Project Review Branch, National Institute on Alcohol Abuse and Alcoholism, National Institutes of Health, Suite 409, 6000 Executive Blvd., Bethesda, MD 20892–7003, 301–443–9787, etaylor@niaaa.nih.gov

(Catalogue of Federal Domestic Assistance Program Nos. 93.271, Alcohol Research Career Development Awards for Scientists and Clinicians; 93.272, Alcohol National Research Service Awards for Research Training; 93.273, Alcohol Research Programs; 93.891, Alcohol Research Center Grants, National Institutes of Health, HHS)

Dated: January 27, 2000.

LaVerne Y. Stringfield,

Director, Office of Federal Advisory Committee Policy.

[FR Doc. 00–2345 Filed 2–2–00; 8:45 am]

BILLING CODE 4140–01–M

DEPARTMENT OF HEALTH AND HUMAN SERVICES

National Institutes of Health

National Institute of General Medical Sciences; Notice of Closed Meetings

Pursuant to section 10(d) of the Federal Advisory Committee Act, as amended (5 U.S.C. Appendix 2), notice is hereby given of the following meetings.

The meetings will be closed to the public in accordance with the provisions set forth in sections 552b(c)(4) and 552b(c)(6), Title 5 U.S.C., as amended. The grant applications and the discussions could disclose confidential trade secrets or commercial property such as patentable material, and personal information concerning individuals associated with the grant applications, the disclosure of which would constitute a clearly unwarranted invasion of personal privacy.

Name of Committee: National Institute of General Medical Sciences Special Emphasis Panel, MARC/MBRS Communication Technology.

Date: March 2, 2000.

Time: 8:30 a.m. to 5:00 p.m.

Agenda: To review and evaluate grant applications.

Place: Hilton Gaithersburg, 620 Perry Parkway, Gaithersburg, MD 20877.

Contact Person: Richard I. Martinez, Office of Review Activities, Office of Scientific Review, National Institute of General Medical Sciences, National Institutes of Health, Natcher Building, Room 1AS–19G, Bethesda, MD 20892–6200, (301) 594–2849.

Name of Committee: National Institute of General Medical Sciences Special Emphasis Panel, MARC/MBRS Annual Symposium.

Date: March 3, 2000.

Time: 8:30 a.m. to 5:00 p.m.

Agenda: To review and evaluate grant applications.

Place: Hilton Gaithersburg, 620 Perry Parkway, Gaithersburg, MD 20877.

Contact Person: Richard I. Martinez, Office of Review Activities, Office of Scientific Review, National Institute of General Medical Sciences, National Institutes of Health, Natcher Building, Room 1AS–19G, Bethesda, MD 20892–6200, (301) 594–2849.

(Catalogue of Federal Domestic Assistance Program Nos. 93.375, Minority Biomedical Research Support; 93.821, Cell Biology and Biophysics Research; 93.859, Pharmacology, Physiology, and Biological Chemistry Research; 93.862, Genetics and Developmental Biology Research; 93.88, Minority Access to Research Careers; 93.96, Special Minority Initiatives, National Institutes of Health, HHS)

Dated: January 24, 2000.

LaVerne Y. Stringfield,

Director, Office of Federal Advisory Committee Policy.

[FR Doc.00–2346 Filed 2–2–00; 8:45am]

BILLING CODE 4140–01–M

DEPARTMENT OF HEALTH AND HUMAN SERVICES

National Institutes of Health

National Institute of Arthritis and Musculoskeletal and Skin Diseases; Notice of Closed Meeting

Pursuant to section 10(d) of the Federal Advisory Committee Act, as amended (5 U.S.C. Appendix 2), notice is hereby given of the following meeting.

The meeting will be closed to the public in accordance with the provisions set forth in sections 552b(c)(4) and 552b(c)(6), Title 5 U.S.C., as amended. The grant applications and the discussions could disclose confidential trade secrets or commercial property such as patentable material, and personal information concerning individuals associated with the grant applications, the disclosure of which would constitute a clearly unwarranted invasion of personal privacy.

Name of Committee: National Institute of Arthritis and Musculoskeletal and Skin Diseases Special Emphasis Panel.

Date: March 7–8, 2000.

Time: 8:30 a.m. to 5:00 p.m.

Agenda: To review and evaluate grant applications.

Place: Kenwood Country Club, 5601 River Road, Bethesda, MD 20816.

Contact Person: Aftab A. Ansari, Scientific Review Administrator, National Institutes of Health, NIAMS, Natcher Bldg., Room 5As25N, Bethesda, MD 20892, 301–594–4952.

(Catalogue of Federal Domestic Assistance Program Nos. 93.846, Arthritis, Musculoskeletal and Skin Diseases Research, National Institutes of Health, HHS)

Dated: January 24, 2000.

LaVerne Y. Stringfield,

Director, Office of Federal Advisory Committee Policy.

[FR Doc. 00–2347 Filed 2–2–00; 8:45 am]

BILLING CODE 4140–01–M

DEPARTMENT OF HEALTH AND HUMAN SERVICES

National Institutes of Health

National Institute of Arthritis and Musculoskeletal and Skin Diseases; Notice of Closed Meeting

Pursuant to section 10(d) of the Federal Advisory Committee Act, as amended (5 U.S.C. Appendix 2), notice is hereby given of the following meeting.

The meeting will be closed to the public in accordance with the provisions set forth in sections 552b(c)(4) and 552b(c)(6), Title 5 U.S.C., as amended. The grant applications and the discussions could disclose confidential trade secrets or commercial property such as patentable material, and personal information concerning individuals associated with the grant applications, the disclosure of which would constitute a clearly unwarranted invasion of personal privacy.

Name of Committee: National Institute of Arthritis and Musculoskeletal and Skin Diseases Special Emphasis Panel.

Date: January 26, 2000.

Time: 3 p.m. to 4 p.m.

Agenda: To review and evaluate grant applications.

Place: Natcher Bldg, 45 Center Drive, Room 5As.25u, Bethesda, MD 20893, (Telephone Conference Call).

Contact Person: Tommy L. Broadwater, Chief, Grants Review Branch, National Institutes of Health, NIAMS, Natcher Bldg., Room 5As25U, Bethesda, MD 20892, 301–594–4952.

This notice is being published less than 15 days prior to the meeting due to the timing limitations imposed by the review and funding cycle.

(Catalogue of Federal Domestic Assistance Program Nos. 93–846, Arthritis, Musculoskeletal and Skin Diseases Research, National Institutes of Health, HHS)

Dated: January 24, 2000.

Anna Snouffer,

Deputy Director, Office of Federal Advisory Committee Policy.

[FR Doc. 00–2348 Filed 2–2–00; 8:45 am]

BILLING CODE 4140–01–M

DEPARTMENT OF HEALTH AND HUMAN SERVICES

National Institutes of Health

National Institute on Drug Abuse; Notice of Closed Meetings

Pursuant to section 10(d) of the Federal Advisory Committee Act, as amended (5 U.S.C. Appendix 2), notice is hereby given of the following meetings.

The meetings will be closed to the public in accordance with the provisions set forth in sections 552b(c)(4) and 552b(c)(6), Title 5 U.S.C., as amended. The contract proposals and the discussions could disclose confidential trade secrets or commercial property such as patentable material, and personal information concerning individuals associated with the contract proposals, the disclosure of which would constitute a clearly unwarranted invasion of personal privacy.

Name of Committee: National Institute on Drug Abuse Special Emphasis Panel, ''Kits for DNA Micro-array Technology''.

Date: January 25, 2000.

Time: 9:00 a.m. to 5:00 p.m.

Agenda: To review and evaluate contract proposals.

Place: Bethesda Marriott Hotel, 5151 Pooks Hill Road, Bethesda, MD 20814.

Contact Person: Richard C. Harrison, Chief, Contract Review Branch, Office of Extramural Affairs, National Institute on Drug Abuse, National Institutes of Health, 6001 Executive Boulevard, Room 3158, MSC 9547, Bethesda, MD 20892–9547, 301–435–1437.

This notice is being published less than 15 days prior to the meeting due to the timing limitations imposed by the review and funding cycle.

Name of Committee: National Institute on Drug Abuse Special Emphasis Panel, ''Web-based Visualization and Analysis of DNA Micro-array Data''.

Date: January 27, 2000.

Time: 9:00 a.m. to 5:00 p.m.

Agenda: To review and evaluate contract proposals.

Place: Bethesda Marriott Hotel, 5151 Pooks Hill Road, Bethesda, MD 20814.

Contact Person: Richard C. Harrison, Chief, Contract Review Branch, Office of Extramural Affairs, National Institute on Drug Abuse, National Institutes of Health, 6001 Executive Boulevard, Room 3158, MSC 9547, Bethesda, MD 20892–9547, 301–435–1437.

This notice is being published less than 15 days prior to the meeting due to the timing limitations imposed by the review and funding cycle.

Name of Committee: National Institute on Drug Abuse Special Emphasis Panel, ''Chemical Libraries for Drug Development''.

Date: February 3, 2000.

Time: 1:30 p.m. to 3:00 p.m.

Agenda: To review and evaluate contract proposals.

Place: Neuroscience Center, National Institutes of Health, 6001 Executive Blvd., Bethesda, MD 20892, (Telephone Conference Call).

Contact Person: Eric Zatman, Contract Review Specialist, Office of Extramural Affairs, National Institute on Drug Abuse, National Institutes of Health, DHHS, 6001 Executive Boulevard, Room 3158, MSC 9547, Bethesda, MD 20892–9547, (301) 435–1438.

This notice is being published less than 15 days prior to the meeting due to the timing limitations imposed by the review and funding cycle.

(Catalogue of Federal Domestic Assistance Program Nos. 93.277, Drug Abuse Scientist

Development Award for Clinicians, Scientist Development Awards, and Research Scientist Awards; 93.278, Drug Abuse National Research Service Awards for Research Training; 93.279, Drug Abuse Research Programs, National Institutes of Health, HHS)

Dated: January 24, 2000.

LaVerne Y. Stringfield,

Director, Office of Federal Advisory Committee Policy.

[FR Doc. 00–2349 Filed 2–2–00; 8:45 am]

BILLING CODE 4140–01–M

DEPARTMENT OF HEALTH AND HUMAN SERVICES

Public Health Service

National Institutes of Health

Extension of Public Comment Period on Draft National Institutes of Health Guidelines for Research Involving Human Pluripotent Stem Cells (December 1999)

The National Institutes of Health is extending the public comment period on the Draft National Institutes of Health Guidelines for Research Involving Human Pluripotent Stem Cells (December 1999) for three weeks. Written comments should be received by NIH on or before February 22, 2000. Comments should be addressed to: Stem Cell Guidelines, NIH Office of Science Policy, 1 Center Drive, Building 1, Room 218, Bethesda, MD 20892. Comments may also be sent by facsimile transmission to Stem Cell Guidelines at (301) 402–0280, or by e-mail to: *stemcell@mail.nih.gov.*

January 28, 2000.

Ruth Kirschstein,

Acting Director, NIH.

[FR Doc. 00–2353 Filed 2–2–00; 8:45 am]

BILLING CODE 4140–01–P

DEPARTMENT OF HEALTH AND HUMAN SERVICES

Substance Abuse and Mental Health Services Administration

Agency Information Collection Activities: Proposed Collection; Comment Request

In compliance with Section 3506(c)(2)(A) of the Paperwork Reduction Act of 1995 concerning opportunity for public comment on proposed collections of information, the Substance Abuse and Mental Health Services Administration will publish periodic summaries of proposed projects. To request more information on the proposed projects or to obtain a copy of the information collection plans, call the SAMHSA Reports Clearance Officer on (301) 443–7978.

Comments are invited on: (a) Whether the proposed collections of information are necessary for the proper performance of the functions of the agency, including whether the information shall have practical utility; (b) the accuracy of the agency's estimate of the burden of the proposed collection of information; (c) ways to enhance the quality, utility, and clarity of the information to be collected; and (d) ways to minimize the burden of the collection of information on respondents, including through the use of automated collection techniques or other forms of information technology.

Proposed Project: 2000 Survey of Mental Health Organizations, General Hospital Mental Health Services, and Managed Care Organizations (SMHO)

The survey, to be conducted by SAMHSA's Center for Mental Health Services (CMHS), will be conducted in two phases. Phase I will be a brief two-three page inventory consisting of four forms: (1) A specialty mental health organization and general hospital with separate mental health services form; (2) A general hospital with integrated mental health services screener form; (3) A community residential organization screener form; and (4) A managed behavioral healthcare organization form. This short inventory will be sent to all known organizations to define the universe of valid mental health organizations to be sampled in Phase II. The inventory will collect basic information regarding the name and address of the organizations, their type and ownership, and the kinds of services provided.

Phase II will sample approximately 2,000 mental health organizations and utilize a more detailed survey instrument. Although the Sample Survey form will be more comprehensive, it will be very similar to surveys and inventories fielded in 1998, 1994, 1992 and earlier. The organizational data to be collected by the Sample Survey form include university affiliation, client/patient census by basic demographics, revenues, expenditures, and staffing.

The resulting database will be used to provide national estimates and will be the basis fo the National Directory of Mental Health Services. In addition, data derived from the survey will be published by CMHS in *Data Highlights,* in *Mental Health, United States,* and in professional journals such as *Psychiatric Services* and the *American Journal of Psychiatry. Mental Health, United States* is used by the general public, state governments, the U.S. Congress, university researchers, and other health care professionals.

Questionnaire	Number of respondents	Responses/ respondent	Average hours/ response	Total burden
Phase I (Inventory)	12,634	1	0.25	3,158
Specialty Mental Health Organizations	(4,126)	(1)	(0.25)	(1,031)
General Hospitals with Separate Mental Health Services	(1,736)	(1)	(0.25)	(434)
General Hospitals with Integrated Mental Health Services	(3,617)	(1)	(0.25)	(904)
Community Residential Organizations	(1,415)	(1)	(0.25)	(354)
Managed Care Organizations	(1,740)	(1)	(0.25)	(435)
Phase II (Sample Survey)	2,000	1	3.00	6,000
Specialty Mental Health Organizations	(1,404)	(1)	(3.00)	(4,212)
General Hospitals with Separate Mental Health Services	(596)	(1)	(3.00)	(1,788)
Total	14,634	.....	.....	9,158

Send comments to Nancy Pearce, SAMHSA Reports Clearance Officer, Room 16–105, Parklawn Building, 5600 Fishers Lane, Rockville, MD 20857. Written comments should be received within 60 days of this notice.

Dated: January 28, 2000.

Richard Kopanda,

Executive Officer, SAMHSA.

[FR Doc. 00–2398 Filed 2–2–00; 8:45 am]

BILLING CODE 4162–20–P

DEPARTMENT OF HOUSING AND URBAN DEVELOPMENT

[Docket No. FR–4563–N–01]

Notice of Proposed Information Collection for Public Comments for Section 8 Management Assessment Program

AGENCY: Office of the Assistant Secretary for Public and Indian Housing, HUD.

ACTION: Notice.

SUMMARY: The proposed information collection requirement described below will be submitted to the Office of Management and budget (OMB) for review, as required by the Paperwork Reduction Act. The Department is soliciting public comments on the subject proposal.

DATES: *Comments Due Date:* April 3, 2000.

ADDRESSES: Interested persons are invited to submit comments regarding this proposal. Comments should refer to the proposal by name and/or OMB Control number and should be sent to: Mildred M. Hamman, Reports Liaison Officer, Public and Indian Housing, Department of Housing and Urban Development, 451 7th Street, SW., Room 4238, Washington, DC 20410–5000.

FOR FURTHER INFORMATION CONTACT: Mildred M. Hamman, (202) 708–3642, extension 4128, for copies of the proposed forms and other available documents. (This is not a toll-free number).

SUPPLEMENTARY INFORMATION: The Department will submit the proposed information collection to OMB for review, as required by the Paperwork Reduction Act of 1995 (44 U.S.C. Chapter 35, as amended).

This Notice is soliciting comments from members of the public and affected agencies concerning the proposed collection of information to: (1) Evaluate whether the proposed collection of information is necessary for the proper performance of the functions of the agency, including whether the information will have practical utility; (2) evaluate the accuracy of the agency's estimate of the burden of the proposed collection of information; (3) enhance the quality, utility, and clarity of the information to be collected; and (4) minimize the burden of the collection of information on those who are to respond, including through the use of appropriate automated collection techniques or other forms of information technology; *e.g.,* permitting electronic submission of responses.

This Notice also lists the following information: Title of Proposal: Section 8 Management Assessment Program, OMB Control Number: 2577–0215.

Description of the need for the information and proposed use: The information is necessary to rate and assess public housing agency (PHA) management capabilities and deficiencies in key program areas, to improve HUD oversight of the Section 8 tenant-based program and to help HUD target monitoring and assistance to PHA programs that pose the greatest risk.

Members of affected public: Public housing agencies.

Estimation of the total number of hours needed to prepare the information collection including number of respondents, frequency of response, and hours of response:

Information collection	Number of respondents	Responses per respondent	Total annual responses	Hours per response	Total hours	Regulatory reference
SEMAP Certification	2,565	1	2,565	12	30,780	985.101
Corrective Action Plan	260	1	260	10	2,600	985.107(c)
Report on Correction of SEMAP Deficiency	670	1	670	2	1,340	985.106
Total annual burden					34,720	

Status of the proposed information collection: Revision and extension of a currently approved collection.

Authority: Section 3506 of the Paperwork Reduction Act of 1995, 44 U.S.C. Chapter 35, as amended.

Dated: January 27, 2000.

Deborah Vincent,

General Deputy Assistant Secretary for Public and Indian Housing.

BILLING CODE 4210–33–M

Section 8 Management Assessment Program (SEMAP) Certification

U.S. Department of Housing and Urban Development
Office of Public and Indian Housing

OMB Approval No. 2577-0215 (exp. 1/31/2000)

Public reporting burden for this collection of information is estimated to average 12 hours per response, including the time for reviewing instructions, searching existing data sources, gathering and maintaining the data needed, and completing and reviewing the collection of information. This agency may not conduct or sponsor, and you are not required to respond to, a collection of information unless it displays a currently valid OMB control number.

This collection of information is required by 24 CFR sec 985.101 which requires a Public Housing Agency (PHA) administering a Section 8 tenant-based assistance program to submit an annual SEMAP Certification within 60 days after the end of its fiscal year. The information from the PHA concerns the performance of the PHA and provides assurance that there is no evidence of seriously deficient performance. HUD uses the information and other data to assess PHA management capabilities and deficiencies, and to assign an overall performance rating to the PHA. Responses are mandatory and the information collected does not lend itself to confidentiality.

Instructions Respond to this certification form using the PHA's actual data for the fiscal year just ended.

PHA Name	For PHA FY Ending (mm/dd/yyyy)	Submission Date (mm/dd/yyyy)

Check here if the PHA expends less than $300,000 a year in Federal awards ☐
Indicators 1 - 7 will not be rated if the PHA expends less than $300,000 a year in Federal awards and its Section 8 programs are not audited for compliance with regulations by an independent auditor. A PHA that expends less than $300,000 in Federal awards in a year must still complete the certification for these indicators.

Performance Indicators

1. Selection from the Waiting List. (24 CFR 982.54(d)(1) and 982.204(a))
(a) The PHA has written policies in its administrative plan for selecting applicants from the waiting list.

PHA Response **Yes** ☐ **No** ☐

(b) The PHA's quality control samples of applicants reaching the top of the waiting list and of admissions show that at least 98% of the families in the samples were selected from the waiting list for admission in accordance with the PHA's policies and met the selection criteria that determined their places on the waiting list and their order of selection.

PHA Response **Yes** ☐ **No** ☐

2. Reasonable Rent. (24 CFR 982.4, 982.54(d)(15), 982.158(f)(7) and 982.507)
(a) The PHA has and implements a reasonable written method to determine and document for each unit leased that the rent to owner is reasonable based on current rents for comparable unassisted units (i) at the time of initial leasing, (ii) before any increase in the rent to owner, and (iii) at the HAP contract anniversary if there is a 5 percent decrease in the published FMR in effect 60 days before the HAP contract anniversary. The PHA's method takes into consideration the location, size, type, quality, and age of the program unit and of similar unassisted units, and any amenities, housing services, maintenance or utilities provided by the owners.

PHA Response **Yes** ☐ **No** ☐

(b) The PHA's quality control sample of tenant files for which a determination of reasonable rent was required shows that the PHA followed its written method to determine reasonable rent and documented its determination that the rent to owner is reasonable as required for (check one):

PHA Response ☐ **At least 98% of units sampled** ☐ **80 to 97% of units sampled** ☐ **Less than 80% of units sampled**

3. Determination of Adjusted Income. (24 CFR part 5, subpart F and 24 CFR 982.516)
The PHA's quality control sample of tenant files shows that at the time of admission and reexamination, the PHA properly obtained third party verification of adjusted income or documented why third party verification was not available; used the verified information in determining adjusted income; properly attributed allowances for expenses; and, where the family is responsible for utilities under the lease, the PHA used the appropriate utility allowances for the unit leased in determining the gross rent for (check one):

PHA Response ☐ **At least 90% of files sampled** ☐ **80 to 89% of files sampled** ☐ **Less than 80% of files sampled**

4. Utility Allowance Schedule. (24 CFR 982.517)
The PHA maintains an up-to-date utility allowance schedule. The PHA reviewed utility rate data that it obtained within the last 12 months, and adjusted its utility allowance schedule if there has been a change of 10% or more in a utility rate since the last time the utility allowance schedule was revised.
PHA Response **Yes** ☐ **No** ☐

5. HQS Quality Control Inspections. (24 CFR 982.405(b))
A PHA supervisor (or other qualified person) reinspected a sample of units during the PHA fiscal year, which met the minimum sample size required by HUD (see 24 CFR 985.2), for quality control of HQS inspections. The PHA supervisor's reinspected sample was drawn from recently completed HQS inspections and represents a cross section of neighborhoods and the work of a cross section of inspectors.

PHA Response **Yes** ☐ **No** ☐

6. HQS Enforcement. (24 CFR 982.404)
The PHA's quality control sample of case files with failed HQS inspections shows that, for all cases sampled, any cited life-threatening HQS deficiencies were corrected within 24 hours from the inspection and, all other cited HQS deficiencies were corrected within no more than 30 calendar days from the inspection or any PHA-approved extension, or, if HQS deficiencies were not corrected within the required time frame, the PHA stopped housing assistance payments beginning no later than the first of the month following the correction period, or took prompt and vigorous action to enforce the family obligations for (check one):
PHA Response ☐ **At least 98% of cases sampled** ☐ **Less than 98% of cases sampled**

7. Expanding Housing Opportunities. (24 CFR 982.54(d)(5), 982.153(b)(3) and (b)(4), 982.301(a) and 983.301(b)(4) and (b)(12)).
Applies only to PHAs with jurisdiction in metropolitan FMR areas.
Check here if not applicable ☐

(a) The PHA has a written policy to encourage participation by owners of units outside areas of poverty or minority concentration which clearly delineates areas in its jurisdiction that the PHA considers areas of poverty or minority concentration, and which includes actions the PHA will take to encourage owner participation.
PHA Response **Yes** ☐ **No** ☐

(b) The PHA has documentation that shows that it took actions indicated in its written policy to encourage participation by owners outside areas of poverty and minority concentration.
PHA Response **Yes** ☐ **No** ☐

(c) The PHA has prepared maps that show various areas, both within and neighboring its jurisdiction, with housing opportunities outside areas of poverty and minority concentration; the PHA has assembled information about job opportunities, schools and services in these areas; and the PHA uses the maps and related information when briefing voucher holders.
PHA Response **Yes** ☐ **No** ☐

(d) The PHA's information packet for voucher holders contains either a list of owners who are willing to lease, or properties available for lease, under the voucher program, or a list of other organizations that will help families find units and the list includes properties or organizations that operate outside areas of poverty or minority concentration.
PHA Response **Yes** ☐ **No** ☐

(e) The PHA's information packet includes an explanation of how portability works and includes a list of neighboring PHAs with the name, address and telephone number of a portability contact person at each.
PHA Response **Yes** ☐ **No** ☐

(f) The PHA has analyzed whether voucher holders have experienced difficulties in finding housing outside areas of poverty or minority concentration and, where such difficulties were found, the PHA has considered whether it is appropriate to seek approval of exception payment standard amounts in any part of its jurisdiction and has sought HUD approval when necessary.
PHA Response **Yes** ☐ **No** ☐

8. Payment Standards. The PHA has adopted current payment standards for the voucher program by unit size for each FMR area in the PHA jurisdiction and, if applicable, for each PHA-designated part of an FMR area, which do not exceed 110 percent of the current applicable FMR and which are not less than 90 percent of the current FMR (unless a lower percent is approved by HUD). (24 CFR 982.503)

PHA Response **Yes** ☐ **No** ☐

Enter current FMRs and payment standards (PS)

0-BR FMR _____	1-BR FMR _____	2-BR FMR _____	3-BR FMR _____	4-BR FMR _____
PS _____	PS _____	PS _____	PS _____	PS _____

If the PHA has jurisdiction in more than one FMR area, and/or if the PHA has established separate payment standards for a PHA-designated part of an FMR area, attach similar FMR and payment standard comparisons for each FMR area and designated area.

9. Annual Reexaminations. The PHA completes a reexamination for each participating family at least every 12 months. (24 CFR 5.617)

PHA Response **Yes** ☐ **No** ☐

10. Correct Tenant Rent Calculations. The PHA correctly calculates tenant rent in the rental certificate program and the family rent to owner in the rental voucher program. (24 CFR 982, Subpart K)

PHA Response **Yes** ☐ **No** ☐

11. Precontract HQS Inspections. Each newly leased unit passed HQS inspection before the beginning date of the assisted lease and HAP contract. (24 CFR 982.305)

PHA Response **Yes** ☐ **No** ☐

12. Annual HQS Inspections. The PHA inspects each unit under contract at least annually. (24 CFR 982.405(a))

PHA Response **Yes** ☐ **No** ☐

13. Lease-Up. The PHA executes assistance contracts on behalf of eligible families for the number of units that has been under budget for at least one year.

PHA Response **Yes** ☐ **No** ☐

14a. Family Self-Sufficiency Enrollment. The PHA has enrolled families in FSS as required. (24 CFR 984.105)
Applies only to PHAs required to administer an FSS program.
Check here if not applicable ☐
PHA Response
a. Number of mandatory FSS slots (Count units funded under the FY 1992 FSS incentive awards and in FY 1993 and later through 10/20/1998. Exclude units funded in connection with Section 8 and Section 23 project-based contract terminations; public housing demolition, disposition and replacement; HUD multifamily property sales; prepaid or terminated mortgages under section 236 or section 221(d)(3); and Section 8 renewal funding. Subtract the number of families that successfully completed their contracts on or after 10/21/1998.) ☐

or, Number of mandatory FSS slots under HUD-approved exception ☐

b. Number of FSS families currently enrolled

c. Portability: If you are the **initial** PHA, enter the number of families currently enrolled in your FSS program, but who have moved under portability and whose Section 8 assistance is administered by another PHA

Percent of FSS slots filled (b + c divided by a)

14b. Percent of FSS Participants with Escrow Account Balances. The PHA has made progress in supporting family self-sufficiency as measured by the percent of currently enrolled FSS families with escrow account balances. (24 CFR 984.305)
Applies only to PHAs required to administer an FSS program.
Check here if not applicable ☐

PHA Response **Yes** ☐ **No** ☐

Portability: If you are the **initial** PHA, enter the number of families with FSS escrow accounts currently enrolled in your FSS program, but who have moved under portability and whose Section 8 assistance is administered by another PHA

Deconcentration Bonus Indicator (Optional and only for PHAs with jurisdiction in metropolitan FMR areas).

The PHA is submitting with this certification data which show that:

(1) Half or more of all Section 8 families with children assisted by the PHA in its principal operating area resided in low poverty census tracts at the end of the last PHA FY;

(2) The percent of Section 8 mover families with children who moved to low poverty census tracts in the PHA's principal operating area during the last PHA FY is at least two percentage points higher than the percent of all Section 8 families with children who resided in low poverty census tracts at the end of the last PHA FY;

or

(3) The percent of Section 8 mover families with children who moved to low poverty census tracts in the PHA's principal operating area over the last two PHA FYs is at least two percentage points higher than the percent of all Section 8 families with children who resided in low poverty census tracts at the end of the second to last PHA FY.

PHA Response **Yes** ☐ **No** ☐ **If yes, attach completed deconcentration bonus indicator addendum.**

I hereby certify that, to the best of my knowledge, the above responses under the Section 8 Management Assessment Program (SEMAP) are true and accurate for the PHA fiscal year indicated above. I also certify that, to my present knowledge, there is not evidence to indicate seriously deficient performance that casts doubt on the PHA's capacity to administer Section 8 rental assistance in accordance with Federal law and regulations.

Warning: HUD will prosecute false claims and statements. Conviction may result in criminal and/or civil penalties. (18 U.S.C. 1001, 1010, 1012; 31 U.S.C. 3729, 3802)

Executive Director, signature _____

Date (mm/dd/yyyy) _____

Chairperson, Board of Commissioners, signature _____

Date (mm/dd/yyyy) _____

The PHA may include with its SEMAP certification any information bearing on the accuracy or completeness of the information used by the PHA in providing its certification.

SEMAP Certification - Addendum for Reporting Data for Deconcentration Bonus Indicator

Date (mm/dd/yyyy) _____

PHA Name _____

Principal Operating Area of PHA _____
(The geographic entity for which the Census tabulates data)

Special Instructions for State or regional PHAs. Complete a copy of this addendum for each metropolitan area or portion of a metropolitan area (i.e., principal operating areas) where the PHA has assisted 20 or more Section 8 families with children in the last completed PHA FY. HUD will rate the areas separately and the separate ratings will then be weighted by the number of assisted families with children in each area and averaged to determine bonus points.

1990 Census Poverty Rate of Principal Operating Area _____

Criteria to Obtain Deconcentration Indicator Bonus Points

To qualify for bonus points, a PHA must complete the requested information and answer yes for only one of the 3 criteria below. However, State and regional PHAs must always complete line 1) b for each metropolitan principal operating area.

1) _____ a. Number of Section 8 families with children assisted by the PHA in its principal operating area at the end of the last PHA FY who live in low poverty census tracts. A low poverty census tract is a tract with a poverty rate at or below the overall poverty rate for the principal operating area of the PHA, or at or below 10% whichever is greater.

_____ b. Total Section 8 families with children assisted by the PHA in its principal operating area at the end of the last PHA FY.

_____ c. Percent of all Section 8 families with children residing in low poverty census tracts in the PHA's principal operating area at the end of the last PHA FY (line a divided by line b).

Is line c 50% or more? **Yes** ☐ **No** ☐

2) _____ a. Percent of all Section 8 families with children residing in low poverty census tracts in the PHA's principal operating area at the end of the last completed PHA FY.

_____ b. Number of Section 8 families with children who moved to low poverty census tracts during the last completed PHA FY.

_____ c. Number of Section 8 families with children who moved during the last completed PHA FY.

_____ d. Percent of all Section 8 mover families with children who moved to low poverty census tracts during the last PHA fiscal year (line b divided by line c).

Is line d at least two percentage points higher than line a? **Yes** ☐ **No** ☐

3) _____ a. Percent of all Section 8 families with children residing in low poverty census tracts in the PHA's principal operating area at the end of the second to last completed PHA FY.

_____ b. Number of Section 8 families with children who moved to low poverty census tracts during the last two completed PHA FYs.

_____ c. Number of Section 8 families with children who moved during the last two completed PHA FYs.

_____ d. Percent of all Section 8 mover families with children who moved to low poverty census tracts over the last two completed PHA FYs (line b divided by line c).

Is line d at least two percentage points higher than line a? **Yes** ☐ **No** ☐

If one of the 3 criteria above is met, the PHA may be eligible for 5 bonus points.

See instructions above concerning bonus points for State and regional PHAs.

Previous edition is obsolete

form **HUD-52648** (12/22/1999)
ref. 24 CFR Part 985

[FR Doc. 00–2315 Filed 2–2–00; 8:45 am]
BILLING CODE 4210–33–M

DEPARTMENT OF THE INTERIOR

Bureau of Land Management

[AZ–952–09–1420–00]

Arizona State Office, 222 N. Central Avenue, Phoenix, AZ 85004; Arizona; Notice of Filing of Plats of Survey

January 18, 2000.

1. The plats of survey of the following described land were officially filed in the Arizona State Office, Phoenix, Arizona on the dates indicated:

A plat, in four sheets, representing the dependent resurvey of a portion of the subdivisional lines, the metes-and-bounds survey of the Hopi and Navajo partition line, and the survey of a portion of the subdivisional lines, Township 31 North, Range 10 East of the Gila and Salt River Meridian, Arizona, accepted May 3, 1999 and officially filed May 14, 1999.

This plat was prepared at the request of the Bureau of Indian Affairs, Phoenix Area Office.

A plat in four sheets, representing the dependent resurvey of south, east, and west boundaries, the subdivisonal lines, and Tract 37, and the metes-and-bounds survey of the Hopi and Navajo partition line, Township 31 North, Range 11 East, of the Gila and Salt River Meridian, Arizona, accepted April 23, 1999 and officially filed April 30, 1999.

This plat was prepared at the request of the Bureau of Indian Affairs, Phoenix Area Office.

A plat in seven sheets, representing the dependent resurvey of a portion of the south and east boundaries, a portion of the subdivisional lines and Tracts 43 through 52, and the metes-and-bounds survey of the Hopi and Navajo portion line in Township 32 North, Range 11 East, of the Gila and Salt River Meridian, Arizona, accepted April 20, 1999 and officially filed April 30, 1999.

This plat was prepared a the request of the Bureau of Indian Affairs, Phoenix Area Office.

A plat in four sheets, representing the metes-and-bounds survey of the Hopi and Navajo partition line through unsurveyed Townships 30 North, Ranges 11 and 12 East, and Township 31 North, Range 12 East, and partially surveyed Township 32 North, Range 12 East, of the Gila and Salt River Meridian, Arizona, accepted May 3, 1999 and officially filed May 14, 1999.

This plat was prepared at the request of the Bureau of Indian Affairs, Phoenix Area Office.

A plat in three sheets, representing the dependent resurvey of a portion of the south boundary and a portion of the subdivisional lines and the metes-and-bounds survey of the Hopi and Navajo partition line in Township 32 North, Range 12 East, of the Gila and Salt River Meridian, Arizona, accepted April 22, 1999 and officially filed April 30, 1999.

This plat was prepared at the request of the Bureau of Indian Affairs, Phoenix Area Office.

A plat in four sheets, representing the dependent resurvey of a portion of the Gila and Salt River Baseline (south boundary), a portion of the subdivisional lines and portions of certain mineral surveys, and the metes-and-bounds surveys in Township 1 North, Range 14 East, of the Gila and Salt River Meridian, Arizona, accepted May 11, 1999 and officially filed May 21, 1999.

This plat was prepared at the request of the Bureau of Land Management and Cyprus Mine of Miami, Arizona.

A plat representing the survey of the Fifth Guide Meridian East, (a portion of the west boundary), the east boundary, and a portion of the subdivisional lines, Township 36 North, Range 21 East, of the Gila and Salt River Meridian, Arizona, accepted July 23, 1999 and officially filed July 30, 1999.

This plat was prepared at the request of the Bureau of Indian Affairs, Navajo Area Office.

A plat representing the survey of the south, east, west and north boundaries, and the subdivisional lines, Township 35 North, Range 23 East, of the Gila and Salt River Meridian, Arizona, accepted December 1, 1999 and officially filed December 10, 1999.

This plat was prepared at the request of the Bureau of Indian Affairs, Navajo Area Office.

A plat representing the subdivision of section 6 and a metes-and-bounds survey in section 6, Township 8 North, Range 5 West, of the Gila and Salt River Meridian, Arizona, accepted November 30, 1999 and officially filed December 10, 1999.

This plat was prepared at the request of the Bureau of Land Management, Phoenix Filed Office.

A plat representing the dependent resurvey of a portion of the subdivisional lines and the metes-and-bounds survey of the Table Top Wilderness Area boundary, Township 7 South, Range 1 East, of the Gila and Salt River Meridian, Arizona, accepted December 3, 1999 and officially filed December 10, 1999.

This plat was prepared at the request of the Bureau of Land Management, Arizona State Office.

A plat, in three sheets, representing the dependent resurvey of a portion of the east boundary and a portion of the subdivisional lines and the metes-and-bounds survey of the Table Top Wilderness Area boundary, Township 8 South, Range 1 East, of the Gila and Salt River Meridian, Arizona, accepted January 3, 2000 and officially filed January 12, 2000.

This plat was prepared at the request of the Bureau of Land Management, Arizona State Office.

A plat, in three sheets, representing the survey of a portion of the east boundary, the dependent resurvey of a portion of the west boundary and a portion of the subdivisional lines and the metes-and-bounds survey of the Table Top Wilderness Area boundary, Township 7 South, Range 2 East, of the Gila and Salt River Meridian, Arizona, accepted September 7, 1999 and officially filed September 17, 1999.

This plat was prepared at the request of the Bureau of Land Management, Arizona State Office.

A plat, in three sheets, representing the dependent resurvey of a portion of the subdivisional lines and the metes-and-bounds survey of the Table Top Wilderness Area boundary, Township 8 South, Range 2 East, of the Gila and Salt River Meridian, Arizona, accepted January 3, 2000 and officially filed January 12, 2000.

This plat was prepared at the request of the Bureau of Land Management, Arizona State Office.

A plat, in four sheets, representing the dependent resurvey of a portion of the south boundary, a portion of the subdivisional lines, and the metes-and-bounds survey of the Table Top Wilderness Area boundary, Township 7 South, Range 3 East, of the Gila and Salt River Meridian, Arizona, was accepted December 8, 1999, and officially filed December 17, 1999.

This plat was prepared at the request of the Bureau of Land Management, Arizona State Office.

A plat, in four sheets, representing the dependent resurvey of a portion of the subdivisional lines and the metes-and-bounds survey of the Table Top Wilderness Area boundary, Township 8 South, Range 3 East, of the Gila and Salt River Meridian, Arizona, was accepted January 4, 2000, and officially filed January 12, 2000.

This plat was prepared at the request of the Bureau of Land Management, Arizona State Office.

A plat, in two sheets, representing the dependent resurvey of a portion of the north boundary and a portion of the subdivisional lines, the survey of a portion of the subdivisional lines and the subdivision of sections, Township 20 South, Range 16 East, of the Gila and Salt River Meridian, Arizona, accepted July 14, 1999 and officially filed July 23, 1999.

These plats will immediately become the basic records for describing the land for all authorized purposes. These plats have been placed in the open files and are available to the public for information only.

2. All inquires relation to these lands should be sent to the Arizona State Office, Bureau of Land Management, 222 N. Central Avenue, P.O. Box 1552, Phoenix, Arizona 85001–1552.

Kenny D. Ravnikar.,

Chief Cadastral Surveyor of Arizona.

[FR Doc. 00–2424 Filed 2–2–00; 8:45 am]

BILLING CODE 4310–32–P

DEPARTMENT OF THE INTERIOR

National Park Service

Environmental Impact Statement/ General Management Plan Point Reyes National Seashore, Marin County, CA; Notice of Intent

SUMMARY: In accord with the National Environmental Policy Act of 1969 (Pub. L. 91–190) and pursuant to regulations of the President's Council on Environmental Quality (40 CFR 1501.7

and 1580.22), the National Park Service will prepare an Environmental Impact Statement and General Management Plan (EIS/GMP) for Point Reyes National Seashore. This notice supersedes previous Notices published on October 14, 1997 (V62; N198; P53336) and May 24, 1999 (V64; N99; P28008), and hereby extends the scoping process and comment period through March 14, 2000.

Background

The purpose of the EIS/GMP will be to state the management philosophy for Point Reyes National Seashore and provide strategies for addressing major issues. Two types of strategies will be identified and analyzed: (1) Those required to manage and preserve cultural and natural resources; and (2) those required to provide for safe, accessible and appropriate use of those resources by visitors. Based on these strategies, the EIS/GMP will identify the programs, actions, support facilities, and appropriate mitigation measures needed for their implementation. The EIS/GMP will guide management of park lands over the subsequent 10–15 years.

It has been determined that lands in the northern district of Golden Gate National Recreation Area (but administered by Point Reyes National Seashore) will be addressed in this EIS/GMP. This includes approximately 15,000 acres of land in the Olema Valley, north of the Bolinas-Fairfax Road and east of Highway 1 as well as Tomales Bay lands. Scoping comments received to date regarding other issues will also continue to be addressed, and need not be resubmitted.

Comments

Persons wishing to express any new concerns about management issues and future land management direction are encouraged to address these to the Superintendent, Point Reyes National Seashore, Point Reyes, California 94956. Comments can also be emailed to ''ann__nelson@nps.gov''. All comments must be postmarked or transmitted no later than March 14, 2000. A public workshop to hear comments and suggestions will be conducted at park headquarters on Tuesday, February 29, 2000 from 5:00–7:00 p.m. Questions regarding the plan or scoping sessions should be addressed to the Superintendent either by mail to the above address, or by telephone at (415) 663–8522.

If individuals submitting comments request that their name or/and address be withheld from public disclosure, it will be honored to the extent allowable by law. Such requests must be stated prominently in the beginning of the comments. There also may be circumstances wherein the NPS withhold a respondent's identity as allowable by law. As always: NPS will make available to public inspection all submissions from organizations or businesses and from persons identifying themselves as representatives or officials of organizations and businesses; and, anonymous comments may not be considered.

Decision

The official responsible for the final decision is John J. Reynolds, Regional Director, Pacific West Region; the official responsible for implementation is Don Neubacher, Superintendent, Point Reyes National Seashore. At this time it is anticipated that the draft EIS/GMP will be available for public review in the summer of 2001, and the final EIS/GMP completed in the spring of 2002. Distribution of both documents will be duly noted in the **Federal Register** and announced via local and regional press. A Record of Decision would be prepared not sooner than 30 days following release of the final EIS/GMP.

Dated: January 21, 2000.

John J. Reynolds,

Regional Director, Pacific West Region.

[FR Doc. 00–2303 Filed 2–2–00; 8:45 am]

BILLING CODE 4310–70–M

DEPARTMENT OF THE INTERIOR

National Park Service

Notice of Scoping for Fire Management Plan, Point Reyes National Seashore, Marin County, CA

SUMMARY: Notice is hereby given, in accordance with the provisions of the National Environmental Policy Act (42 U.S.C. 4321 *et. seq.*) that public scoping has been initiated for a conservation planning and impact analysis process for updating the fire management plan for Point Reyes National Seashore, including Golden Gate National Recreation Area lands administered by Point Reyes National Seashore. The purpose of the scoping process is to elicit early public comment regarding issues and concerns, a suitable range of alternatives and appropriate mitigating measures, and the nature and extent of potential environmental impacts which should be addressed.

Background

Point Reyes National Seashore is a unit of the National Park System. Research has shown that fire is a significant natural process across a large portion of the 85,000 acres administered by the park. A fire management program was begun in 1976 and has continued to the present time. Three forms of wildland fire management—aggressive suppression of unwanted wildfires, prescribed burning, and mechanical fuel reduction—have been used to achieve natural and cultural resource management, hazard fuel reduction, and fire prevention goals.

The last revision of the fire management plan culminated in a Finding Of No Significant Impact, dated August 2, 1993. Since that time, a range of new issues, improved information, and unforeseeable constraints have emerged which have the potential to affect the future direction of the fire management program within the parks. Some of these issues include but are not limited to: A continued decline in ecosystem health due to fire suppression, increased hazards and costs associated with fire suppression, and more stringent air quality regulations.

Comments

As noted, the National Park Service will undertake an environmental analysis effort to address issues and alternatives for fire management on lands administered by Point Reyes National Seashore. At this time, it has not been determined whether an Environmental Assessment or Environmental Impact Statement will be prepared, however, this scoping process will aid in the preparation of either document. As the first step in this undertaking, a variety of public scoping and information activities will be conducted. An initial public meeting will be held under the auspices of the Point Reyes Citizen Advisory Commission, January 29, 2000, 10 a.m., at the Dance Palace in Point Reyes Station. A second public meeting will be held at park headquarters on March 9, 2000, 7 p.m.

For those unable to attend meetings, a scoping document will be available through the park. Main topics addressed in the scoping document and meetings are: Background information on the fire management program; review of relevant policy and law affecting fire management programs; assessment of current fire management needs; and identification of issues and options for fire management in the parks.

Interested individuals, organizations, and agencies are encouraged to provide comments or suggestions. Written comments regarding the fire management program must be

postmarked (or transmitted) no later than March 28, 2000. For the most up-to-date information on the scoping meetings, or to request a copy of the scoping background material and provide comments, please contact: Superintendent, Point Reyes National Seashore; Attn: Fire Management Plan; Point Reyes Station, California 94965; telephone (415) 663–8522 ext. 265 (or email ann__nelson@nps.gov.).

If individuals submitting comments request that their name or/and address be withheld from public disclosure, it will be honored to the extent allowable by law. Such requests must be stated prominently in the beginning of the comments. There also may be circumstances wherein the NPS will withhold a respondents identity as allowable by law. As always: NPS will make available to public inspection all submissions from organizations or businesses and from persons identifying themselves as representatives or officials of organizations and businesses; and, anonymous comments may not be considered.

Decision

The official responsible for approval is the Regional Director, Pacific West Region, National Park Service; the official responsible for implementation will be the Superintendent, Point Reyes National Seashore. The draft fire management plan and environmental document are expected to be available for public review in the summer of 2000. At this time it is anticipated that the final plan and environmental document are to be completed in Fall/Winter 2000/2001.

Dated: January 21, 2000.

John J. Reynolds,

Regional Director, Pacific West Region.

[FR Doc. 00–2300 Filed 2–2–00; 8:45 am]

BILLING CODE 4310–70–P

DEPARTMENT OF THE INTERIOR

National Park Service

Denali National Park Subsistence Resource Commission; Meeting

AGENCY: National Park Service, Interior.

ACTION: Announcement of Subsistence Resource Commission meeting.

SUMMARY: The Superintendent of Denali National Park and Preserve and the Chairperson of the Denali Subsistence Resource Commission announce a forthcoming meeting of the Subsistence Resource Commission for Denali National Park and Preserve. The following agenda items will be discussed:

(1) Call to order.
(2) Roll call—Confirm Quorum.
(3) Welcome and introductions.
(4) Approval of last meeting minutes.
(5) Additions and corrections to agenda.
(6) Business:
(a) Proposed Federal Subsistence Wildlife Regulations for 2000–2001.
(b) Proposed Federal Subsistence Fisheries Projects for 2000.
(c) SRC Chairs Workshop Report.
(7) Public and other agency comments.
(8) Set time and place of next SRC meeting.
(9) Adjournment.

DATES: The meeting will begin at 9 a.m. on Monday, February 14th, 2000 and conclude around 5 p.m.

LOCATION: The meeting will be held at the North Star Inn, Healy, Alaska.

FOR FURTHER INFORMATION CONTACT: Hollis Twitchell, Subsistence and Cultural Branch, P.O. Box 9, Denali Park, Alaska 99755, Phone (907) 683–9544 or (907) 456–0595.

SUPPLEMENTARY INFORMATION: The Subsistence Resource Commissions are authorized under title VIII, section 808, of the Alaska National Interest Lands Conservation Act, Pub. L. 96–487, and operates in accordance with the provisions of the Federal Advisory Committees Act. Note that under the Freedom of Information Act (FOIA), transcripts of any person giving public comments may be made available under a FOIA request.

Paul Anderson,

Deputy Regional Director.

[FR Doc. 00–2301 Filed 2–2–00; 8:45 am]

BILLING CODE 4310–70–P

DEPARTMENT OF THE INTERIOR

National Park Service

Rescheduled Second Public Scoping Meeting for Environmental Planning for Use of Kenilworth Park, Washington, DC

AGENCY: National Park Service, Interior.

ACTION: Rescheduled second public scoping meeting by the National park Service (NPS) pursuant to the National Environmental Policy Act (NEPA) and NPS Policy related to planning for the use of Kenilworth Park.

SUMMARY: The meeting originally scheduled for January 22, 2000, had to be postponed for reasons out of the control of NPS. On February 5, 2000, NPS is holding the rescheduled second public scoping meeting in furtherance of its NEPA responsibilities and NPS Policy, in order to elicit additional public input concerning the future use of Kenilwork Park in light of the NPS-directed clean-up and stabilization activities in the park.

Following a November 30, 1999 public scoping meeting, NPS has been preparing a Development Plan/Environmental Assessment (EA) for future uses of this park. At the February 5, 2000 meeting, NPS will discuss alternative conceptual schemes, along with any additional ideas for the future uses of the park. NPS will also inform the public of the current NPS activities at the park. When this EA is completed, it will be available for public review prior to the NPS decision on this EA pursuant to NEPA.

DATE: The meeting will take place on Saturday, February 5, 2000 from 10 a.m. to 1 p.m.

ADDRESSES: The meeting will be held at Zion Baptist Church of Eastland Gardens, located at 1234 Kenilworth Avenue, NE, Washington, DC.

For more information, contact the National Capital Parks-East public information officer at (202) 690–5185.

Dated: January 28, 2000.

Karen Taylor Goodrich,

Superintendent, National Capital Parks-East.

[FR Doc. 00–2305 Filed 2–2–00; 8:45 am]

BILLING CODE 4310–70–M

DEPARTMENT OF THE INTERIOR

National Park Service

Wrangell-St. Elias National Park Subsistence Resource Commission; Meeting

AGENCY: National Park Service, Interior.

ACTION: Announcement of Subsistence Resource Commission meeting.

SUMMARY: The Superintendent of Wrangell-St. Elias National Park and the Chairperson of the Subsistence Resource Commission announce a forthcoming meeting of the Wrangell-St. Elias National Park Subsistence Resource Commission. The following agenda items will be discussed:

(1) Call to order.
(2) Roll call—Confirm Quorum.
(3) Introduction of Commission members, staff, and guests.
(4) Review Agenda.
(5) Review and approval of minutes from April 20–21, 1999 meeting.
(6) Superintendent's welcome and review of the Commission purpose.
(7) Commission membership status.

(8) Election of Chair and Vice Chair.

(9) Public and other agency comments.

(10) New Business:

a. Update on Federal Fish Management.

b. Federal Subsistence Program update.

(1) Review 2000–2001 Federal Subsistence Board Proposals for Units 5, 6, 11, 12, and 13.

(2) Review actions taken by Federal Subsistence Board during spring 1999 meeting on Federal Subsistence Program 1999–2000 proposed regulation changes.

(3) Review FSB final version of Individual C&T policy.

(4) Review request for delegating SRC hunting plan recommendation response to the Regional Director in Alaska.

(5) Review FSB response to George Midvag letter—re: Slana CT.

(11) Report on October 1999 Chairs Workshop.

(12) Superintendent's report.

a. Wrangell-St. Elias National Park and Preserve Superintendent and Yakutat District Ranger Positions.

(13) Wrangell-St. Elias National Park and Preserve staff reports.

a. Mentasta Herd Update.

(14) Old Business:

a. Status of EA/rulemaking to add Northway, Tetlin, Tanacross and Dot Lake as resident zone communities community.

b. Cordova Public Meeting.

c. Status of Malaspina Forelands ATV study project.

d. Possible restrictions of the harvest of ewe sheep.

e. Subsistence Hunting Program Recommendation 97–01: establish minimum residency requirement for resident zone communities.

f. SRC Chairs Customary Trade Concerns.

g. Status report on Hunting Plan Recommendation 96–1 and 96–2: migratory bird.

h. Tolsona resident zone request.

i. Status report on subsistence plan, hunt maps, and subsistence brochure for Wrangell-St. Elias National Park and Preserve.

(15) Public and other agency comments.

(16) Subsistence Resource Commission work session to develop proposals/finalize recommendations.

(17) Set time and place of next Subsistence Resource Commission meeting.

(18) Adjourn meeting.

DATES: The meeting will begin at 9 a.m. on Tuesday, February 22, 2000, and conclude at approximately 5 p.m. The meeting will reconvene at 9 a.m. on Wednesday, February 23, 2000, and adjourn at approximately 5 p.m. The meeting will adjourn earlier if the agenda items are completed.

LOCATION: The meeting will be held at Tazlina Community Hall, Tazlina, Alaska.

FOR FURTHER INFORMATION CONTACT: Gary Candelaria, Superintendent, and Heather Yates, Subsistence Manager, Wrangell-St. Elias National Park and Preserve, P.O. Box 439, Copper Center, Alaska 99573. Phone (907) 822–5234.

SUPPLEMENTARY INFORMATION: The Subsistence Resource Commissions are authorized under title VIII, section 808, of the Alaska National Interest Lands Conservation Act, Pub. L. 96–487, and operates in accordance with the provisions of the Federal Advisory Committees Act. Note that under the Freedom of Information Act (FOIA), transcripts of any person giving public comments may be made available under a FOIA request.

Paul Anderson,

Deputy Regional Director.

[FR Doc. 00–2304 Filed 2–2–00; 8:45 am]

BILLING CODE 4310–70–P

DEPARTMENT OF THE INTERIOR

Bureau of Reclamation

CALFED Bay-Delta Program Policy Group

AGENCY: Bureau of Reclamation, Interior.

ACTION: Notice of meeting.

SUMMARY: The CALFED Bay-Delta Program Policy Group will meet on February 23, 2000. The agenda for the Policy Group meeting will include discussion of the CALFED Long-Term Water Management Strategy Evaluation Framework and the Preferred Program Alternative in the Final Programmatic EIS/R. This meeting is open to the public. Interested persons may make oral statements to the CALFED Bay-Delta Program Policy Group or may file written for consideration.

DATES: The CALFED Bay-Delta Program Policy Group meeting will be held from 9 a.m. to 4:30 p.m. on Wednesday, February 23, 2000.

ADDRESSES: This meeting will meet at The Sterling Hotel, 1300 H Street, Sacramento, CA 95814.

FOR FURTHER INFORMATION CONTACT: Mary Selkirk, CALFED Bay-Delta Program, at (916) 657–2666. If reasonable accommodation is needed due to a disability, please contact the Equal Employment Opportunity Office at (916) 653–6952 or TDD (916) 653–6934 at least one week prior to the meeting.

SUPPLEMENTARY INFORMATION: The San Francisco Bay/Sacramento-San Joaquin Delta Estuary (Bay-Delta system) is a critically important part of California's natural environment and economy. In recognition of the serious problems facing the region and the complex resource management decisions that must be made, the state of California and the Federal government are working together to stabilize, protect, restore, and enhance the Bay-Delta system. The State and Federal agencies with management and regulatory responsibilities in the Bay-Delta system are working together as CALFED to provide policy direction and oversight for the process.

One area of Bay-Delta management includes the establishment of a joint State-Federal process to develop long-term solutions to problems in the Bay-Delta system related to fish and wildlife, water supply reliability, natural disasters, and water quality. The intent is to develop a comprehensive and balanced plan which address all of the resource problems. This effort, the CALFED Bay-Delta Program (Program), is being carried out under the direction of the CALFED Policy Group. The Program is exploring and developing a long-term solution for a cooperative planning process that will determine the most appropriate strategy and actions necessary to improve water quality, restore health to the Bay-Delta ecosystem, provide for a variety of beneficial uses, and minimize Bay-Delta system vulnerability. The CALFED Policy Group provides general policy direction on all aspects of the CALFED Program.

Dated: January 28, 2000.

Lester A. Snow,

Regional Director.

[FR Doc. 00–2356 Filed 2–2–00; 8:45 am]

BILLING CODE 4310–94–M

INTERNATIONAL TRADE COMMISSION

[Investigations Nos. 701–TA–A (Review) and 731–TA–157 (Review)]

Carbon Steel Wire Rod From Argentina

Determinations

On the basis of the record [1] developed in the subject five-year reviews, the

[1] The record is defined in sec. 207.2(f) of the Commission's Rules of Practice and Procedure (19 CFR § 207.2(f)).

United States International Trade Commission determines, pursuant to section 735(b) of the Tariff Act of 1930 (19 U.S.C. 1673d(b)) (the Act), that termination of the suspended countervailing duty investigation and revocation of the antidumping duty order on carbon steel wire rod from Argentina would not likely lead to continuation or recurrence of material injury to an industry in the United States within a reasonably foreseeable time.[1]

Background

The Commission instituted these reviews on November 2, 1998 (63 FR 58756) and determined effective February 14, 1999 (64 FR 8120, February 18, 1999) that it would conduct full reviews. Notice of the scheduling of the Commission's reviews and of a public hearing to be held in connection therewith was given by posting copies of the notice in the Office of the Secretary, U.S. International Trade Commission, Washington, DC, and by publishing the notice in the **Federal Register** on March 31, 1999 (64 FR 15375). The hearing was held in Washington, DC, on August 3, 1999, and all persons who requested the opportunity were permitted to appear in person or by counsel.

The Commission transmitted its determinations in these investigations to the Secretary of Commerce on January 27, 2000. The views of the Commission are contained in USITC Publication 3270 (January 2000), entitled Carbon Steel Wire Rod from Argentina: Investigations Nos. 701–TA–A (Review and 731–TA–157 (Review).

Issued: January 28, 2000.

By order of the Commission.

Donna R. Koehnke,

Secretary.

[FR Doc. 00–2327 Filed 2–2–00; 8:45 am]

BILLING CODE 7020–02–U

[1] Chairman Lynn M. Bragg dissenting. Commissioners Jennifer A. Hillman and Deanna Tanner Okun not participating.

INTERNATIONAL TRADE COMMISSION

[Investigation No. 731–TA–621 (Review)]

Compact Ductile Iron Waterworks Fittings From China

AGENCY: United States International Trade Commission.

ACTION: Termination of five-year review.

SUMMARY: The subject five-year review was initiated in November 1999 to determine whether revocation of the existing antidumping duty order would be likely to lead to continuation or recurrence of dumping and of material injury to a domestic industry. On January 24, 2000, the Department of Commerce published notice that it was revoking the order ''because no domestic party responded to the sunset review notice of initiation by the applicable deadline'' (65 FR 3660). Accordingly, pursuant to section 207.69 of the Commission's Rules of Practice and Procedure (19 CFR § 207.69), the subject review is terminated.

EFFECTIVE DATE: January 24, 2000.

FOR FURTHER INFORMATION CONTACT: Vera Libeau (202–205–3176), Office of Investigations, U.S. International Trade Commission, 500 E Street SW, Washington, DC 20436. Hearing-impaired individuals are advised that information on this matter can be obtained by contacting the Commission's TDD terminal on 202–205–1810. Persons with mobility impairments who will need special assistance in gaining access to the Commission should contact the Office of the Secretary at 202–205–2000. General information concerning the Commission may also be obtained by accessing its internet server (http://www.usitc.gov).

Authority: This review is being terminated under authority of title VII of the Tariff Act of 1930; this notice is published pursuant to section 207.69 of the Commission's rules (19 CFR § 207.69).

Issued: January 28, 2000.

By order of the Commission.

Donna R. Koehnke,

Secretary.

[FR Doc. 00–2329 Filed 2–2–00; 8:45 am]

BILLING CODE 7020–02–P

INTERNATIONAL TRADE COMMISSION

[Investigations Nos. 701–TA–202 (Review) and 731–TA–103 and 514 (Review)]

Cotton Shop Towels From Bangladesh, China, and Pakistan

Determinations

On the Basis of the record[1] developed in the subject five-year reviews, the United States International Trade Commission determines,[2] pursuant to section 751(c) of the Tariff Act of 1930 (19 U.S.C. 1675(c)) (the Act), that revocation of the existing antidumping duty orders on cotton shop towels from Bangladesh and China, and the existing countervailing duty order on cotton shop towels from Pakistan would be likely to lead to continuation or recurrence of material injury to an industry in the United States within a reasonably foreseeable time.

Background

The Commission instituted these reviews on January 4, 1999 (64 FR 371) and determined on April 8, 1999, that it would conduct full reviews (64 FR 19195, April 19, 1999). Notice of the scheduling of the Commission's reviews and of a public hearing to be held in connection therewith was given by posting copies of the notice in the Office of the Secretary, U.S. International Trade Commission, Washington, DC, and by publishing the notice in the **Federal Register** on June 28, 1999 (64 FR 34679). The hearing was held in Washington, DC, on November 18, 1999, and all persons who requested the opportunity were permitted to appear in person or by counsel.

The Commission transmitted its determinations in these investigations to the Secretary of Commerce on January 21, 2000. The views of the Commission are contained in USITC Publication 3267 (January, 2000), entitled Cotton Shop Towels from Bangladesh, China, and Pakistan (Invs. Nos. 701–TA–202 (Review) and 731–TA–103 and 514 (Review).

By order of the Commission.

Issued: January 27, 2000.

Donna R. Koehnke,

Secretary.

[FR Doc. 00–2325 Filed 2–2–00; 8:45 am]

BILLING CODE 7020–02–P

[1] The record is defined in sec. 207.2(f) of the Commission's Rules of Practice and Procedure (19 CFR § 207.2(f)).

[2] Commissioner Askey dissenting with regard to Bangladesh and Pakistan. Vice Chairman Marcia E. Miller and Commissioner Deanna Tanner Okun not participating.

INTERNATIONAL TRADE COMMISSION

[Investigation No. 731–TA–814 (Final)]

Creatine Monohydrate From China

Determination

On the basis of the record[1] developed in the subject investigation, the United States International Trade Commission determines, pursuant to section 735(b) of the Tariff Act of 1930 (19 U.S.C. § 1673d(b)) (the Act), that an industry in the United States is materially injured by reason of imports from China of creatine monohydrate, provided for in

[1] The record is defined in sec. 207.2(f) of the Commission's Rules of Practice and Procedure (19 CFR § 207.2(f)).

subheading 2925.20.90 of the Harmonized Tariff Schedule of the United States, that have been found by the Department of Commerce to be sold in the United States at less than fair value (LTFV).[2] The Commission made a negative determination concerning critical circumstances.

Background

The Commission instituted this investigation effective February 12, 1999, following receipt of a petition filed with the Commission and the Department of Commerce by Pfanstiehl Laboratories, Inc., Waukegan, IL. The final phase of the investigation was scheduled by the Commission following notification of a preliminary determination by the Department of Commerce that imports of creatine monohydrate from China were being sold at LTFV within the meaning of section 733(b) of the Act (19 U.S.C. § 1673b(b)). Notice of the scheduling of the Commission's investigation and of a public hearing to be held in connection therewith was given by posting copies of the notice in the Office of the Secretary, U.S. International Trade Commission, Washington, DC, and by publishing the notice in the **Federal Register** of August 19, 1999 (64 FR 45275). The hearing was held in Washington, DC, on December 16, 1999, and all persons who requested the opportunity were permitted to appear in person or by counsel.

The Commission transmitted its determination in this investigation to the Secretary of Commerce on January 28, 2000. The views of the Commission are contained in USITC Publication 3272 (January, 2000), entitled Creatine Monohydrate from China (Investigation No. 731–TA–814 (Final)).

By order of the Commission.

Issued: January 28, 2000.

Donna R. Koehnke,

Secretary.

[FR Doc. 00–2331 Filed 2–2–00; 8:45 am]

BILLING CODE 7020–01–P

[2] Commissioner Deanna Tanner Okun did not participate in this investigation.

INTERNATIONAL TRADE COMMISSION

[Investigation 332–411]

Electric Power Services: Recent Reforms in Selected Foreign Markets

AGENCY: United States International Trade Commission.

ACTION: Institution of investigation and scheduling of public hearing.

EFFECTIVE DATE: January 24, 2000.

SUMMARY: Following receipt of a request on November 23, 1999, from the United States Trade Representative (USTR), the Commission instituted investigation No. 332–411, Electric Power Services: Recent Reforms in Selected Foreign Markets, under section 332(g) of the Tariff Act of 1930 (19 U.S.C. 1332(g)).

FOR FURTHER INFORMATION CONTACT: Information specific to this investigation may be obtained from Mr. Christopher Melly, Project Leader (202–205–3461), Mr. Michael Nunes, Deputy Project Leader (202–205–3462), or Mr. Richard Brown, Chief, Services and Investment Division (202–205–3438), Office of Industries, U.S. International Trade Commission, Washington, DC, 20436. For information on the legal aspects of this investigation, contact William Gearhart of the Office of the General Counsel (202–205–3091). Hearing impaired individuals are advised that information on this matter can be obtained by contacting the TDD terminal on (202) 205–1810.

Background

In her letter dated November 22, 1999, the USTR requested that the Commission, pursuant to section 332(g) of the Tariff Act of 1930, conduct an investigation of the electric power services markets in countries where significant market reform, privatization, and liberalization has occurred or is ongoing. The foreign markets to be examined are: Argentina, Australia, Brazil, Canada, Chile, the European Union, Japan, New Zealand, and Venezuela. As requested, in its report, the Commission will (1) discuss the nature and extent of market reform, privatization, and liberalization undertaken in foreign electricity markets; (2) examine current and evolving conditions of market access, investment, and regulation; and (3) provide, if possible, a listing of common regulatory practices insofar as these exist. For the purpose of this study, electric power services are broadly defined to include core areas such as generation, transmission, and distribution, as well as construction, engineering, consulting, and marketing services as they pertain to the provision of electricity.

The USTR asked that the Commission Furnish its report by November 22, 2000, and that the Commission make the report available to the public in its entirety.

Public Hearing

A public hearing in connection with the investigation will be held at the U.S. International Trade Commission Building, 500 E Street SW, Washington, DC, beginning at 9:30 a.m. on June 6, 2000. All persons shall have the right to appear, by counsel or in person, to present information and to be heard. Requests to appear at the public hearing should be filed with the Secretary, United States International Trade Commission, 500 E Street SW, Washington, DC 20436, no later than 5:15 p.m., May 23, 2000. Any prehearing briefs (original and 14 copies) should be filed not later than 5:15 p.m., May 25, 2000; the deadline for filing post-hearing briefs or statements is 5:15 p.m., June 29, 2000. In the event that, as of the close of business on May 23, 2000, no witnesses are scheduled to appear at the hearing, the hearing will be canceled. Any person interested in attending the hearing as an observer or non-participant may call the Secretary of the Commission (202–205–1806) after May 23, 2000, to determine whether the hearing will be held.

Written Submissions

In lieu of or in addition to participating in the hearing, interested parties are invited to submit written statements (original and 14 copies) concerning the matters to be addressed by the Commission in its report on this investigation. Commercial or financial information that a submitter desires the Commission to treat as confidential must be submitted on separate sheets of paper, each clearly marked ''Confidential Business Information'' at the top. All submissions requesting confidential treatment must conform with the requirements of section § 201.6 of the Commission's Rules of Practice and Procedure (19 CFR 201.6). All written submissions, except for confidential business information, will be made available in the Office of the Secretary of the Commission for inspection by interested parties. To be assured of consideration by the Commission, written statements relating to the Commission's report should be submitted to the Commission at the earliest practical date and should be received no later than the close of business on June 29, 2000. All submissions should be addressed to the Secretary, United States International Trade Commission, 500 E Street SW, Washington, DC 20436. The Commission's rules do not authorize filing submissions with the Secretary by facsimile or electronic means.

Persons with mobility impairments who will need special assistance in gaining access to the Commission should contact the Office of the

Secretary at 202–205–2000. General information concerning the Commission may also be obtained by accessing its Internet server (http://www.usitc.gov).

List of Subjects

WTO, GATS, market access, electric power.

Issued: January 24, 2000.

By order of the Commission.

Donna R. Koehnke,

Secretary.

[FR Doc. 00–2324 Filed 2–2–00; 8:45 am]

BILLING CODE 7020–02–P

INTERNATIONAL TRADE COMMISSION

[Inv. No. 337–TA–419]

Certain Excimer Laser Systems for Vision Correction Surgery and Components Thereof and Methods for Performing Such Surgery; Notice of Decision To Extend the Deadline for Determining Whether To Review an Initial Determination Finding No Violation of Section 337 of the Tariff Act of 1930

AGENCY: U.S. International Trade Commission.

ACTION: Notice.

SUMMARY: Notice is hereby given that the U.S. International Trade Commission has determined to extend by three (3) business days, or until February 2, 2000, the deadline for determining whether to review an initial determination (ID) finding no violation of section 337 of the Tariff Act of 1930, as amended in the above-captioned investigation.

FOR FURTHER INFORMATION CONTACT: Timothy P. Monaghan, Esq., Office of the General Counsel, U.S. International Trade Commission, 500 E Street, S.W., Washington, D.C. 20436, telephone 202–205–3152. General information concerning the Commission may also be obtained by accessing its Internet server *(http://www.usitc.gov)*. Hearing-impaired persons are advised that information on this matter can be obtained by contacting the Commission's TDD terminal on 202–205–1810.

SUPPLEMENTARY INFORMATION: This investigation was instituted on March 1, 1999, based on a complaint by VISX, Inc. (''VISX''), 64 FR 10016–17. The respondents named in the investigation are Nidek Co., Ltd., Nidek Inc., and Nidek Technologies, Inc. Complainant alleges importation and sale of certain excimer laser systems for vision correction surgery that infringe claims of U.S. Letters Patent Nos. 4,718,418 and 5,711,762 (''the' 762 patent''). An evidentiary hearing was held from August 18, 1999 to August 27, 1999.

On December 6, 1999, the presiding administrative law judge (''ALJ'') issued her final ID finding that complainant VISX failed to establish the required domestic industry, that there was no infringement of any claim at issue, and that the '762 patent was invalid and unenforceable.

The authority for the Commission's determination is contained in section 337 of the Tariff Act of 1930, as amended (19 U.S.C. 1337), and in section 210.42(h)(2) of the Commission's Rules of Practice and Procedure (19 CFR 210.42(h)(2)).

Copies of the public version of the ALJ's ID and all other nonconfidential documents filed in connection with this investigation are or will be available for inspection during official business hours (8:45 a.m. to 5:15 p.m.) in the Office of the Secretary, U.S. International Trade Commission, 500 E Street, S.W., Washington, D.C. 20436, telephone 202–205–2000.

By order of the Commission.

Dated: Issued: January 28, 2000.

Donna R. Koehnke,

Secretary.

[FR Doc. 00–2330 Filed 2–2–00; 8:45 am]

BILLING CODE 7020–02–P

INTERNATIONAL TRADE COMMISSION

[Investigation No. 731–TA–718 (Review)]

Glycine From China

AGENCY: United States International Trade Commission.

ACTION: Institution of a five-year review concerning the antidumping duty order on glycine from China.

SUMMARY: The Commission hereby gives notice that it has instituted a review pursuant to section 751(c) of the Tariff Act of 1930 (19 U.S.C. 1675(c)) (the Act) to determine whether revocation of the antidumping duty order on glycine from China would be likely to lead to continuation or recurrence of material injury. Pursuant to section 751(c)(2) of the Act, interested parties are requested to respond to this notice by submitting the informaiton specified below to the Commission; [1] to be assured of consideration, the deadline for responses is March 22, 2000. Comments on the adequacy of responses may be filed with the Commission by April 17, 2000.

For further information concerning the conduct of this review and rules of general application, consult the Commission's Rules of Practice and Procedure, part 201, subparts A through E (19 CFR part 201), and part 207, subparts A, D, E, and F (19 CFR part 207). The Rules may also be found on the Commission's World Wide Web site at http://www.usitc.gov/rules.htm.

EFFECTIVE DATE: February 3, 2000.

FOR FURTHER INFORMATION CONTACT: Mary Messer (202–205–3193) or Vera Libeau (202–205–3176), Office of Investigations, U.S. International Trade Commission, 500 E Street SW, Washington, DC 20436. Hearing-impaired persons can obtain information on this matter by contacting the Commission's TDD terminal on 202–205–1810. Persons with mobility impairments who will need special assistance in gaining access to the Commission should contact the Office of the Secretary at 202–205–2000. General information concerning the Commission may also be obtained by accessing its internet server (http://www.usitc.gov).

SUPPLEMENTARY INFORMATION:

Background

On March 29, 1995, the Department of Commerce issued an antidumping duty order on imports of glycine from China (60 FR 16116). The Commission is conducting a review to determine whether revocation of the order would be likely to lead to continuation or recurrence of material injury to the domestic industry within a reasonably foreseeable time. It will assess the adequacy of interested party responses to this notice of institution to determine whether to conduct a full review or an expedited review. The Commission's determination in any expedited review will be based on the facts available, which may include information provided in response to this notice.

Definitions

The following definitions apply to this review:

(1) *Subject Merchandise* is the class or kind of merchandise that is within the scope of the five-year review, as defined by the Department of Commerce.

[1] No response to this request for information is required if a currently valid Office of Management and Budget (OMB) number is not displayed; the OMB number is 3117–0016/USITC No. 00–5–052, expiration date July 31, 2002. Public reporting burden for the request is estimated to average 7 hours per response. Please send comments regarding the accuracy of this burden estimate to the Office of Investigations, U.S. International Trade Commission, 500 E Street, SW, Washington, DC 20436.

(2) The *Subject Country* in this review is China.

(3) The *Domestic Like Product* is the domestically produced product or products which are like, or in the absence of like, most similar in characteristics and uses with, the *Subject Merchandise*. In its original determination, the Commission defined the *Domestic Like Product* as all glycine, regardless of grade.

(4) The *Domestic Industry* is the U.S. producers as a whole of the Domestic Like Product, or those producers whose collective output of the *Domestic Like Product* constitutes a major proportion of the total domestic production of the product. In its original determination, the Commission defined the Domestic Industry as producers of all glycine, regardless of grade.

(5) The *Order Date* is the date that the antidumping duty order under review became effective. In this review, the *Order Date* is March 29, 1995.

(6) An *Importer* is any person or firm engaged, either directly or through a parent company or subsidiary, in importing the *Subject Merchandise* into the United States from a foreign manufacturer or through its selling agent.

Participation in the Review and Public Service List

Persons, including industrial users of the *Subject Merchandise* and, if the merchandise is sold at the retail level, representative consumer organizations, wishing to participate in the review as parties must file an entry of appearance with the Secretary to the Commission, as provided in section 201.11(b)(4) of the Commission's rules, no later than 21 days after publication of this notice in the **Federal Register**. The Secretary will maintain a public service list containing the names and addresses of all persons, or their representatives, who are parties to the review.

Former Commission employees who are seeking to appear in Commission five-year reviews are reminded that they are required, pursuant to 19 CFR 201.15, to seek Commission approval if the matter in which they are seeking to appear was pending in any manner or form during their Commission employment. The Commission's designated agency ethics official has advised that a five-year review is the ''same particular matter'' as the underlying original investigation for purposes of 19 CFR 201.15 and 18 U.S.C. 207, the post employment statute for Federal employees. Former employees may seek informal advice from Commission ethics officials with respect to this and the related issue of whether the employee's participation was ''personal and substantial.'' However, any informal consultation will not relieve former employees of the obligation to seek approval to appear from the Commission under its rule 201.15. For ethics advice, contact Carol McCue Verratti, Deputy Agency Ethics Official, at 202–205–3088.

Limited Disclosure of Business Proprietary Information (BPI) Under an Administrative Protective Order (APO) and APO Service List

Pursuant to section 207.7(a) of the Commission's rules, the Secretary will make BPI submitted in this review available to authorized applicants under the APO issued in the review, provided that the application is made no later than 21 days after publication of this notice in the **Federal Register**. Authorized applicants must represent interested parties, as defined in 19 U.S.C. 1677(9), who are parties to the review. A separate service list will be maintained by the Secretary for those parties authorized to receive BPI under the APO.

Certification

Pursuant to section 207.3 of the Commission's rules, any person submitting information to the Commission in connection with this review must certify that the information is accurate and complete to the best of the submitter's knowledge. In making the certification, the submitter will be deemed to consent, unless otherwise specified, for the Commission, its employees, and contract personnel to use the information provided in any other reviews or investigations of the same or comparable products which the Commission conducts under Title VII of the Act, or in internal audits and investigations relating to the programs and operations of the Commission pursuant to 5 U.S.C. Appendix 3.

Written Submissions

Pursuant to section 207.61 of the Commission's rules, each interested party response to this notice must provide the information specified below. The deadline for filing such responses is March 22, 2000. Pursuant to section 207.62(b) of the Commission's rules, eligible parties (as specified in Commission rule 207.62(b)(1)) may also file comments concerning the adequacy of responses to the notice of institution and whether the Commission should conduct an expedited or full review. The deadline for filing such comments is April 17, 2000. All written submissions must conform with the provisions of sections 201.8 and 207.3 of the Commission's rules and any submissions that contain BPI must also conform with the requirements of sections 201.6 and 207.7 of the Commission's rules. The Commission's rules do not authorize filing of submissions with the Secretary by facsimile or electronic means. Also, in accordance with sections 201.16(c) and 207.3 of the Commission's rules, each document filed by a party to the review must be served on all other parties to the review (as identified by either the public or APO service list as appropriate), and a certificate of service must accompany the document (if you are not a party to the review you do not need to serve your response).

Inability to Provide Requested Information.

Pursuant to section 207.61(c) of the Commission's rules, any interested party that cannot furnish the information requested by this notice in the requested form and manner shall notify the Commission at the earliest possible time, provide a full explanation of why it cannot provide the requested information, and indicate alternative forms in which it can provide equivalent information. If an interested party does not provide this notification (or the Commission finds the explanation provided in the notification inadequate) and fails to provide a complete response to this notice, the Commission may take an adverse inference against the party pursuant to section 776(b) of the Act in making its determination in the review.

INFORMATION TO BE PROVIDED IN RESPONSE TO THIS NOTICE OF INSTITUTION: As used below, the term ''firm'' includes any related firms.

(1) The name and address of your firm or entity (including World Wide Web address if available) and name, telephone number, fax number, and E-mail address of the certifying official.

(2) A statement indicating whether your firm/entity is a U.S. producer of the Domestic Like Product, a U.S. union or worker group, a U.S. importer of the Subject Merchandise, a foreign producer or exporter of the Subject Merchandise, a U.S. or foreign trade or business association, or another interested party (including an explanation). If you are a union/worker group or trade/business association, identify the firms in which your workers are employed or which are members of your association.

(3) A statement indicating whether your firm/entity is willing to participate in this review by providing information requested by the Commission.

(4) A statement of the likely effects of the revocation of the antidumping duty

order on the Domestic Industry in general and/or your firm/entity specifically. In your response, please discuss the various factors specified in section 752(a) of the Act (19 U.S.C. 1675a(a)) including the likely volume of subject imports, likely price effects of subject imports, and likely impact of imports of Subject Merchandise on the Domestic Industry.

(5) A list of all known and currently operating U.S. producers of the Domestic Like Product. Identify any known related parties and the nature of the relationship as defined in section 771(4)(B) of the Act (19 U.S.C.1677(4)(B)).

(6) A list of all known and currently operating U.S. importers of the Subject Merchandise and producers of the Subject Merchandise in the Subject Country that currently export or have exported Subject Merchandise to the United States or other countries since 1994.

(7) If you are a U.S. producer of the Domestic Like Product, provide the following information on your firm's operations on that product during calendar year 1999 (report quantity data in thousands of pounds and value data in thousands of U.S. dollars, f.o.b. plant). If you are a union/worker group or trade/business association, provide the information, on an aggregate basis, for the firms in which your workers are employed/which are members of your association.

(a) Production (quantity) and, if known, an estimate of the percentage of total U.S. production of the Domestic Like Product accounted for by your firm's(s'') production;

(b) the quantity and value of U.S. commercial shipments of the Domestic Like Product produced in your U.S. plant(s); and

(c) the quantity and value of U.S. internal consumption/company transfers of the Domestic Like Product produced in your U.S. plant(s).

(8) If you are a U.S. importer or a trade/business association of U.S. importers of the Subject Merchandise from the Subject Country, provide the following information on your firm's(s') operations on that product during calendar year 1999 (report quantity data in thousands of pounds and value data in thousands of U.S. dollars). If you are a trade/business association, provide the information, on an aggregate basis, for the firms which are members of your association.

(a) The quantity and value (landed, duty-paid but not including antidumping or countervailing duties) of U.S. imports and, if known, an estimate of the percentage of total U.S. imports of Subject Merchandise from the Subject Country accounted for by your firm's(s'') imports;

(b) the quantity and value (f.o.b. U.S. port, including antidumping and/or countervailing duties) of U.S. commercial shipments of Subject Merchandise imported from the Subject Country; and

(c) the quantity and value (f.o.b. U.S. port, including antidumping and/or countervailing duties) of U.S. internal consumption/company transfers of Subject Merchandise imported from the Subject Country.

(9) If you are a producer, an exporter, or a trade/business association of producers or exporters of the Subject Merchandise in the Subject Country, provide the following information on your firm's(s'') operations on that product during calendar year 1999 (report quantity data in thousands of pounds and value data in thousands of U.S. dollars, landed and duty-paid at the U.S. port but not including antidumping or countervailing duties). If you are a trade/business association, provide the information, on an aggregate basis, for the firms which are members of your association.

(a) Production (quantity) and, if known, an estimate of the percentage of total production of Subject Merchandise in the Subject Country accounted for by your firm's(s'') production; and

(b) the quantity and value of your firm's(s'') exports to the United States of Subject Merchandise and, if known, an estimate of the percentage of total exports to the United States of Subject Merchandise from the Subject Country accounted for by your firm's(s'') exports.

(10) Identify significant changes, if any, in the supply and demand conditions or business cycle for the Domestic Like Product that have occurred in the United States or in the market for the Subject Merchandise in the Subject Country since the Order Date, and significant changes, if any, that are likely to occur within a reasonably foreseeable time. Supply conditions to consider include technology; production methods; development efforts; ability to increase production (including the shift of production facilities used for other products and the use, cost, or availability of major inputs into production); and factors related to the ability to shift supply among different national markets (including barriers to importation in foreign markets or changes in market demand abroad). Demand conditions to consider include end uses and applications; the existence and availability of substitute products; and the level of competition among the Domestic Like Product produced in the United States, Subject Merchandise produced in the Subject Country, and such merchandise from other countries.

(11) (OPTIONAL) A statement of whether you agree with the above definitions of the Domestic Like Product and Domestic Industry; if you disagree with either or both of these definitions, please explain why and provide alternative definitions.

Authority: This review is being conducted under authority of title VII of the Tariff Act of 1930; this notice is published pursuant to section 207.61 of the Commission's rules.

By order of the Commission.

Issued: January 24, 2000.

Donna R. Koehnke,

Secretary.

[FR Doc. 00–2423 Filed 2–2–00; 8:45 am]

BILLING CODE 7020–02–U

INTERNATIONAL TRADE COMMISSION

[Investigation 332–237]

Production Sharing: Use of U.S. Components in Foreign Assembly Operations, 1995–98

AGENCY: United States International Trade Commission.

ACTION: Termination of the report series and extended informal reporting of developments through existing publications.

EFFECTIVE DATE: January 14, 2000.

SUMMARY: The Commission is changing the method of providing continued reporting on production sharing and related topics, and has published the last in a formal series of annual reports on production sharing under Inv. No. 332–237, covering the period 1995–98, in December 1999. The report series has been discontinued because official U.S. statistics increasingly understate the magnitude of production-sharing activity. As a growing share of global trade becomes duty free, incentives are reduced for entering U.S. imports under the production-sharing tariff provisions. The Commission will continue to report informally on cross-border integration of manufacturing and related topics in other publications, as appropriate, and plans to report annual statistics on trade under the production-sharing provisions in its quarterly publication Industry Trade and Technology Review (ITTR), as well as provide expanded coverage for these data on the Commission's ''Interactive Tariff and Trade DataWeb'' (http://dataweb.usitc.gov).

BACKGROUND: The Commission has prepared and published annual reports on production-sharing operations since 1986 under this series; notice of initial institution was published in the **Federal Register** of September 4, 1986 (51 FR 31729). In this report series, the Commission has used data on imports under Harmonized Tariff Schedule (HTS) provisions 9802.00.60–.90 as a tool to assess the use of foreign assembly plants as a strategy by U.S. companies to reduce production costs and improve global competitiveness. Because tariffs on many of the products entered under these provisions have been either significantly reduced or eliminated under trade agreements and trade preference programs, many importers no longer enter goods assembled from U.S.-made components under the duty-reducing provisions of HTS chapter 98. Consequently, data on imports entered under these provisions now significantly understate the use of U.S. components in foreign assembly operations. These reporting limitations will become more pronounced for 1999 data since most apparel from Mexico became duty and quota free under NAFTA on January 1, 1999, and the customs user fee applicable to imports from Mexico under NAFTA was eliminated on July 1, 1999. These developments have led the Commission to discontinue the report series in subsequent years, while maintaining continued informal monitoring and reporting through other publications as appropriate.

Data reported under HTS provision 9802.00.60–.90 will continue to provide a meaningful measure of the use of U.S.-made components in imported articles that remain dutiable. For example, such data are an important tool in monitoring the use of U.S.-formed-and-cut fabric in Caribbean garment factories. The Commission plans to report annual data on imports under these production-sharing tariff provisions in its quarterly ITTR publication. Articles assessing developments in the cross-border integration of manufacturing and related topics will be published separately as staff issue papers or as articles for the ITTR report. Parties that are currently on the Commission's mailing list for the Production Sharing report will receive copies of ITTR publications and staff issue papers that cover production-sharing topics, such as cross-border integration of manufacturing, international manufacturing networks, the use of foreign assembly plants and foreign trade zones, and foreign direct investment in manufacturing sectors.

Information on imports under production-sharing provisions (HTS 9802.00.60–.90) is accessible to the public on the Commission's ''Interactive Tariff and Trade DataWeb'' (http://dataweb.usitc.gov). The ''DataWeb'' currently enables parties to access U.S. imports under these tariff provisions, providing total imports by country of origin and the top 20 products from each supplier. The DataWeb will be expanded by late spring to include more timely access for annual production-sharing data by HS Chapter, country, and region, as well as by commodity groups which correspond to appendix B statistical tables contained in the former annual report. Parties also can access a table (updated monthly) from the Commission's Web site (http://www.usitc.gov/miscell.htm) showing U.S.-Mexico trade from 1994 to year-to-date, including imports under NAFTA and HTS 9802.00.60–.90.

The final report in the Production Sharing series assesses (1) the use of foreign assembly operations as a means that companies use to reduce costs and gain improved access to foreign markets; (2) the integration of such operations in North America into international manufacturing networks in the apparel, motor vehicles and parts, and television receiver sectors; and (3) the implications of these developments for the competitiveness of these U.S. industries. The latest report covering 1998 data (USITC Publication 3265, December 1999) may be obtained at the ITC Web site (http://www.usitc.gov/332s/332index.htm). A printed report may be requested by contacting the Office of the Secretary at 202–205–2000 or by fax at 202–205–2104.

FOR FURTHER INFORMATION CONTACT: Ralph Watkins (202) 205–3492; Minerals, Metals, Machinery, and Miscellaneous Manufactures Division; Office of Industries; U.S. International Trade Commission, 500 E Street SW, Washington, DC 20436.

Hearing-impaired individuals are advised that information on this matter can be obtained by contacting our TDD terminal on (202) 205–1810. General information concerning the Commission may also be obtained by accessing its Internet server (http://www.usitc.gov).

Issued: January 28, 2000.

By order of the Commission.

Donna R. Koehnke,

Secretary.

[FR Doc. 00–2328 Filed 2–2–00; 8:45 am]

BILLING CODE 7020–02–P

INTERNATIONAL TRADE COMMISSION

[Inv. No. 337–TA–414]

Certain Semiconductor Memory Devices and Products Containing Same; Notice of Decision To Extend the Deadline for Determining Whether To Review an Initial Determination Finding No Violation of Section 337 of the Tariff Act of 1930

AGENCY: U.S. International Trade Commission.

ACTION: Notice.

SUMMARY: Notice is hereby given that the U.S. International Trade Commission has determined to extend by three (3) business days, or until February 1, 2000, the deadline for determining whether to review an initial determination (ID) finding no violation of section 337 of the Tariff Act of 1930, as amended in the above-captioned investigation.

FOR FURTHER INFORMATION CONTACT: Clara Kuehn, Esq., Office of the General Counsel, U.S. International Trade Commission, 500 E Street, S.W., Washington, D.C. 20436, telephone (202) 205–3012. Hearing-impaired persons are advised that information on this matter can be obtained by contacting the Commission's TDD terminal on 202–205–1810. General information concerning the Commission may also be obtained by accessing its Internet server (http://www.usitc.gov).

SUPPLEMENTARY INFORMATION: The Commission ordered the institution of this investigation on September 18, 1998, based on a complaint filed on behalf of Micron Technology, Inc., 8000 South Federal Way, Boise, Idaho 83707–0006 (''complainant''). The notice of investigation was published in the **Federal Register** on September 25, 1998. 63 FR 51372 (1998).

The presiding administrative law judge (ALJ) issued his final ID on November 29, 1999, concluding that there was no violation of section 337. He found that: (a) Complainant failed to establish the requisite domestic industry showing for any of the three patents at issue; (b) all asserted claims of the patents are invalid; (c) none of the asserted claims of the patents are infringed; and (d) all of the patents are unenforceable for inequitable conduct.

The authority for the Commission's determination is contained in section 337 of the Tariff Act of 1930, as amended (19 U.S.C. § 1337), and in section 210.42(h)(2) of the Commission's Rules of Practice and Procedure (19 C.F.R. 210.42(h)(2)).

Copies of the public version of the ALJ's ID and all other nonconfidential documents filed in connection with this investigation are or will be available for inspection during official business hours (8:45 a.m. to 5:15 p.m.) in the Office of the Secretary, U.S. International Trade Commission, 500 E Street, S.W., Washington, D.C. 20436, telephone 202–205–2000.

Issued: January 27, 2000.

By order of the Commission.

Donna R. Koehnke,

Secretary.

[FR Doc. 00–2326 Filed 2–2–00; 8:45 am]

BILLING CODE 7020–02–P

INTERNATIONAL TRADE COMMISSION

Sunshine Act Meeting

AGENCY HOLDING THE MEETING: United States International Trade Commission

TIME AND DATE: February 9, 2000 at 2:00 p.m.

PLACE: Room 101, 500 E Street S.W. Washington, DC 20436 Telephone: (202) 205–2000

STATUS: Open to the public

MATTERS TO BE CONSIDERED: 1. Agenda for future meeting: none

2. Minutes
3. Ratification List
4. Inv. No. 731–TA–459 (Review)(Polyethylene Terephthalate (PET) Film from Korea)—briefing and vote. (The Commission will transmit its determination to the Secretary of Commerce on February 16, 2000.)
5. Inv. Nos. 731–TA–465–466 and 468 (Review)(Sodium Thiosulfate from China, Germany, and the United Kingdom)—briefing and vote. (The Commission will transmit its determination to the Secretary of Commerce on February 17, 2000.)
6. Inv. Nos. 731–TA–376 and 563–564 (Review)(Stainless Steel Butt-Weld Pipe Fittings from Japan, Korea, and Taiwan)—briefing and vote. (The Commission will transmit its determination to the Secretary of Commerce on February 22, 2000.)
7. Outstanding action jackets: none

In accordance with Commission policy, subject matter listed above, not disposed of at the scheduled meeting, may be carried over to the agenda of the following meeting.

By order of the Commission.

Issued: January 31, 2000.

Donna R. Koehnke,

Secretary.

[FR Doc. 00–02489 Filed 2–1–00; 12:25 pm]

BILLING CODE 7020–02–M

NATIONAL AERONAUTICS AND SPACE ADMINISTRATION

[Notice 00–015]

NASA Advisory Council (NAC), Space Science Advisory Committee (SScAC), Solar System Exploration Subcommittee

AGENCY: National Aeronautics and Space Administration.

ACTION: Notice of Meeting.

SUMMARY: In accordance with the Federal Advisory Committee Act, Pub. L. 92–463, as amended, the National Aeronautics and Space Administration announces a meeting of the NASA Advisory Council, Space Science Advisory Committee, Solar System Exploration Subcommittee.

DATES: Tuesday, February 15, 2000, 8:30 a.m. to 5:00 p.m., and Wednesday, February 16, 2000, 8:30 a.m. 5:00 p.m.

ADDRESSES: National Aeronautics and Space Administration, Conference Room 7H46, 300 E Street, SW, Washington, DC.

FOR FURTHER INFORMATION CONTACT: Carl Pilcher, Code S, National Aeronautics and Space Administration, Washington, DC 20546, (202) 358–2470.

SUPPLEMENTARY INFORMATION: The meeting will be open to the public up to the capacity of the room. The agenda for the meeting is as follows:

—Outer Planets Program Status
—Roadmap Status
—Lunar Survey Tapes
—Technology Readiness for Future Missions

It is imperative that the meeting be held on these dates to accommodate the scheduling priorities of the key participants. Visitors will be requested to sign a visitor's register.

Dated: January 27, 2000.

Matthew M. Crouch,

Advisory Committee Management Officer, National Aeronautics and Space Administration.

[FR Doc. 00–2318 Filed 2–2–00; 8:45 am]

BILLING CODE 7510–01–P

NATIONAL FOUNDATION ON THE ARTS AND THE HUMANITIES

Meeting of Humanities Panel

AGENCY: The National Endowment for the Humanities.

ACTION: Notice of meetings.

SUMMARY: Pursuant to the provisions of the Federal Advisory Committee Act (Pub. L. 92–463, as amended), notice is hereby given that the following meetings of the Humanities Panel will be held at the Old Post Office, 1100 Pennsylvania Avenue, N.W., Washington, DC 20506.

FOR FURTHER INFORMATION CONTACT: Laura S. Nelson, Advisory Committee Management Officer, National Endowment for the Humanities, Washington, DC 20506; telephone (202) 606–8322. Hearing-impaired individuals are advised that information on this matter may be obtained by contacting the Endowment's TDD terminal on (202) 606–8282.

SUPPLEMENTARY INFORMATION: The proposed meetings are for the purpose of panel review, discussion, evaluation and recommendation on applications for financial assistance under the National Foundation on the Arts and the Humanities Act of 1965, as amended, including discussion of information given in confidence to the agency by the grant applicants. Because the proposed meetings will consider information that is likely to disclose trade secrets and commercial or financial information obtained from a person and privileged or confidential and/or information of a personal nature the disclosure of which would constitute a clearly unwarranted invasion of personal privacy, pursuant to authority granted me by the Chairman's Delegation of Authority to Close Advisory Committee meetings, dated July 19, 1933, I have determined that these meetings will be closed to the public pursuant to subsections (c) (4), and (6) of section 552b of Title 5, United States Code.

Date: February 14, 2000.

Time: 9:00 a.m. to 5:30 p.m.

Room: 415.

Program: This meeting will review applications for Humanities Projects in Media, submitted to the Division of Public Programs at the January 10, 2000 deadline.

Laura S. Nelson,

Advisory Committee Management Officer.

[FR Doc. 00–2358 Filed 2–2–00; 8:45 am]

BILLING CODE 7536–01–M

NATIONAL SCIENCE FOUNDATION

Notice of Permits Issued Under the Antarctic Conservation Act of 1978

AGENCY: National Science Foundation.

ACTION: Notice of permits issued under the Antarctic Conservation of 1978, Public Law 95–541.

SUMMARY: The National Science Foundation (NSF) is required to publish notice of permits issued under the

Antarctic Conservation Act of 1978. This is the required notice.

FOR FURTHER INFORMATION CONTACT: Joyce Jatko, Acting Permit Officer, Office of Polar Programs, Rm. 755, National Science Foundation, 4201 Wilson Boulevard, Arlington, VA 22230.

SUPPLEMENTARY INFORMATION: On December 23, 1999, the National Science Foundation published a notice in the **Federal Register** of permit applications received. A permit was issued on January 21, 2000 to Mimi Wallace, Permit No. 2000–023. A permit was issued on January 22, 2000 to Christian H. Fritsen, Permit No. 2000–024.

Joyce Jatko,

Acting Permit Officer.

[FR Doc. 00–2357 Filed 2–2–00; 8:45 am]

BILLING CODE 7555–01–M

NUCLEAR REGULATORY COMMISSION

[Docket No. 50–27]1

Vermont Yankee Nuclear Power Corporation; Vermont Yankee Nuclear Power Station; Notice of Consideration of Approval of Transfer of Facility Operating License and Conforming Amendment, and Opportunity for a Hearing

The U.S. Nuclear Regulatory Commission (the Commission) is considering the issuance of an order under 10 CFR 50.80 approving the transfer of Facility Operating License No. DPR–28 for the Vermont Yankee Nuclear Power Station (Vermont Yankee). The transfer would be to AmerGen Vermont, LLC (AmerGen Vermont). The Commission is also considering amending the license for administrative purposes to reflect the proposed transfer. Vermont Yankee is located in Vernon, Vermont.

According to an application for approval of the transfer and a conforming license amendment filed by the AmerGen Vermont and Vermont Yankee Nuclear Power Corporation (VYNPC), the current license holder, AmerGen Vermont would assume title to the facility following approval of the proposed license transfer, and would be responsible for the operation maintenance and eventual decommissioning of Vermont Yankee. In addition, substantially all of VYNPC's employees located at Vermont Yankee involved in operation and maintenance will assume similar roles and responsibilities for AmerGen Vermont at Vermont Yankee. No physical changes to the Vermont Yankee facility or operational changes are being proposed in the application.

AmerGen Vermont is a Vermont limited liability company established by AmerGen Energy Company, LLC (AmerGen) to own and operate Vermont Yankee. AmerGen Vermont is a wholly owned substantially of AmerGen. AmerGen is a Delaware limited liability company formed to acquire and operate nuclear power plants in the United States. AmerGen is owned by PEPCO Energy Company and British Energy, Inc.

The proposed license amendment would remove references to VYNPC in the license, add references to AmerGen Vermont, and make other administrative changes of a similar nature to reflect the proposed transfer.

Pursuant to 10 CFR 50.80, no license, or any right thereunder, shall be transferred, directly or indirectly, through transfer of control of the license, unless the Commission shall give its consent in writing. The Commission will approve an application for the transfer of a license, if the Commission determines that the proposed transferee is qualified to hold the license, and that the transfer is otherwise consistent with applicable provisions of law, regulations, and orders issued by the Commission pursuant thereto.

Before issuance of the proposed conforming license amendment, the Commission will have made findings required by the Atomic Energy Act of 1954, as amended (the Act), and the Commission's regulations.

As provided in 10 CFR 2.1315, unless otherwise determined by the Commission with regard to a specific application, the Commission has determined that any amendment to the license of a utilization facility which does no more than conform the license to reflect the transfer action involves no significant hazards consideration. No contrary determination has been made with respect to this specific license amendment application. In light of the generic determination reflected in 10 CFR 2.1315, no public comments with respect to significant hazards considerations are being solicited, notwithstanding the general comment procedures contained in 10 CFR 50.91.

The filing of requests for hearing and petitions for leave to intervene, and written comments with regard to the license transfer application, are discussed below.

By February 23, 2000, any person whose interest may be affected by the Commission's action on the application may request a hearing, and, if not the applicants, may petition for leave to intervene in a hearing proceeding on the Commission's action. Requests for a hearing and petitions for leave to intervene should be filed in accordance with the Commission's rules of practice set forth in Subpart M, ''Public Notification, Availability of Documents and Records, Hearing Requests and Procedures for Hearings on License Transfer Applications,'' of 10 CFR Part 2. In particular, such requests and petitions must comply with the requirements set forth in 10 CFR 2.1306, and should address the considerations contained in 10 CFR 2.1308(a). Untimely requests and petitions may be denied, as provided in 10 CFR 2.1308(b), unless good cause for failure to file on time is established. In addition, an untimely request or petition should address the factors that the Commission will also consider, in reviewing untimely requests or petitions, set forth in 10 CFR 2.1308(b)(1)–(2).

Requests for a hearing and petitions for leave to intervene should be served upon counsel for VYNPC, John Ritsher, at One International Place, Boston, Massachusetts, 02110 (tel: 617–951–7000; fax: 617–951–7050; e-mail: jritsher@ropesgray.com), and counsel for AmerGen Vermont, Kevin P. Gallen, at Morgan, Lewis & Bockius LLP, 1800 M Street, NW., Washington, DC 20036–5869 (tel: 202–467–7462; fax: 202–467–7176; e-mail: kpgallen@mlb.com); the General Counsel, U.S. Nuclear Regulatory Commission, Washington, DC 20555 (e-mail address for filings regarding license transfer cases only: OGCLT@NRC.gov); and the Secretary of the Commission, U.S. Nuclear Regulatory Commission, Washington, DC 20555–0001, Attention: Rulemakings, and Adjudications Staff, in accordance with 10 CFR 2.1313.

The Commission will issue a notice or order granting or denying a hearing request or intervention petition, designating the issues for any hearing that will be held and designating the Presiding Officer. A notice granting a hearing will be published in the **Federal Register** and served on the parties to the hearing.

As an alternative to requests for hearing and petitions to intervene, by March 6, 2000, persons may submit written comments regarding the license transfer application, as provided for in 10 CFR 2.1305. The Commission will consider and, if appropriate, respond to these comments, but such comments will not otherwise constitute part of the decisional record. Comments should be submitted to the Secretary, U.S. Nuclear Regulatory Commission, Washington,

DC 20555–0001, Attention: Rulemakings and Adjudications Staff, and should cite the publication date and page number of this **Federal Register** notice.

For further details with respect to this action, see the application dated January 6, 2000, submitted under cover of letter dated January 6, 2000, which is available for public inspection at the Commission's Public Document Room, the Gelman Building, 2120 L Street, NW., Washington, DC., and accessible electronically through the ADAMS Public Electronic Reading Room link at the NRC Web site, http://www.nrc.gov.

Dated at Rockville, Maryland this 27th day of January 2000.

For the Nuclear Regulatory Commission.

Richard P. Croteau,

Project Manager, Section 2 Project Directorate I, Division of Licensing Project Management, Office of Nuclear Reactor Regulation.

[FR Doc. 00–2429 Filed 2–2–00; 8:45 am]

BILLING CODE 7590–01–M

NUCLEAR REGULATORY COMMISSION

Advisory Committee on Nuclear Waste; Notice of Meeting

The Advisory Committee on Nuclear Waste (ACNW) will hold its 117th meeting on February 23–25, 2000, Room 2D Large Conference, Arnold & Mabel Beckman Center of the National Academies, 100 Academy Drive, Irvine, California.

The entire meeting will be open to public attendance.

The schedule for this meeting is as follows:

Wednesday, February 23, 2000—8:30 a.m. Until 5:00 p.m.

8:30 a.m.–12:00 Noon: Self-Assessment–The Committee will conduct a self assessment. The Committee will review the goals set in its 1999 Action Plan, and compare those goals to its accomplishments. The Committee will examine steps it can take to increase its operational efficiency.

1:30 p.m.–2:30 p.m.: Guest Speaker—The Committee will hear a lecture by Dr. Stan Kaplan on the use of probability.

2:45 p.m.–5:00 p.m.: Priorities—The Committee will begin to outline possible issues for consideration in 2000 and beyond.

Thursday, February 24, 2000–8:30 a.m. Until 4:00 p.m.

8:30 a.m.–9:30 a.m.: Review Mission, Vision, Desired Outcomes, Goals and Objectives.

9:30 a.m.–10:30 a.m.: First Tier Priorities—Select First Tier Priority issues for the year 2000 Action Plan.

10:45 a.m.–12:00 Noon: Second Tier Priorities—Select Second Tier Priority issues for the year 2000 Action Plan.

1:30 p.m.–2:30 p.m.: Guest Speaker—The Committee will hear a lecture on waste minimization.

2:45 p.m.–3:30 p.m.: Operational Issues—The Committee will focus on issues to increase operational effectiveness.

3:30 p.m.–4:00 p.m.: Succession Planning—The Committee will focus on succession planning for members and staff over the next five years.

Friday, February 25, 2000–8:30 a.m. Until 3:00 p.m.

8:30 a.m.–10:30 a.m.: ACNW Planning and Procedures—The Committee will consider topics proposed for future consideration by the full Committee and Working Groups. The Committee may also discuss ACNW-related activities of individual members.

10:45 a.m.–2:30 p.m.: Preparation of ACNW Reports—The Committee will discuss planned reports on the following topics: NRC's proposed high-level waste regulation, the Defense-in-Depth philosophy, the release of solid material (tentative), and the Department of Energy's Yucca Mountain specific siting guidelines (tentative).

2:30 p.m.–3:00 p.m.: Miscellaneous—The Committee will discuss miscellaneous matters related to the conduct of Committee and organizational activities and complete discussion of matters and specific issues that were not completed during previous meetings, as time and availability of information permit.

Procedures for the conduct of and participation in ACNW meetings were published in the **Federal Register** on September 28, 1999 (64 FR 52352). In accordance with these procedures, oral or written statements may be presented by members of the public, electronic recordings will be permitted only during those portions of the meeting that are open to the public, and questions may be asked only by members of the Committee, its consultants, and staff. Persons desiring to make oral statements should notify Richard K. Major, ACNW, as far in advance as practicable so that appropriate arrangements can be made to schedule the necessary time during the meeting for such statements. Use of still, motion picture, and television cameras during this meeting will be limited to selected portions of the meeting as determined by the ACNW Chairman. Information regarding the time to be set aside for taking pictures may be obtained by contacting the ACNW office, prior to the meeting. In view of the possibility that the schedule for ACNW meetings may be adjusted by the Chairman as necessary to facilitate the conduct of the meeting, persons planning to attend should notify Mr. Major as to their particular needs.

Further information regarding topics to be discussed, whether the meeting has been canceled or rescheduled, the Chairman's ruling on requests for the opportunity to present oral statements and the time allotted therefore can be obtained by contacting Mr. Richard K. Major, ACNW (Telephone 301/415–7366), between 8:00 A.M. and 5:00 P.M. EST. ACNW meeting notices, meeting transcripts, and letter reports are now available for downloading or reviewing on the internet at http://www.nrc.gov/ACRSACNW.

Dated: January 28, 2000.

Annette Vietti-Cook,

Acting Advisory Committee Management Officer.

[FR Doc. 00–2386 Filed 2–2–00; 8:45 am]

BILLING CODE 7590–01–P

NUCLEAR REGULATORY COMMISSION

Working Group Meeting on Control of Solid Materials

AGENCY: Nuclear Regulatory Commission.

ACTION: Notice of meeting.

SUMMARY: The Nuclear Regulatory Commission (NRC) staff Working Group on control of solid materials will hold regular meetings to develop the Commission paper to be prepared for submittal to the Commission in March 2000. The meetings will be open for the public to observe the processes used for the development of the paper.

DATES: Wednesday, February 9, 2000, from 1 p.m. to 3 p.m., and alternate Wednesdays after that date.

ADDRESSES: Nuclear Regulatory Commission, Room T7–A1, Two White Flint North, 11545 Rockville Pike, Rockville, Maryland.

FOR FURTHER INFORMATION CONTACT: Frank Cardile; e-mail: *fpc@nrc.gov,* telephone: (301) 415–6185; or Anthony Huffert; e-mail: *amh1@nrc.gov,* Office of Nuclear Material Safety and Safeguards, USNRC, Washington DC 20555–0001.

SUPPLEMENTARY INFORMATION: The NRC previously published an Issues Paper in a **Federal Register** notice (FRN) on June 30, 1999 (64 FR 35090), indicating that it is examining its current approach for

the control of solid materials. The Issues Paper discussed several issues and alternative approaches and invited written and electronic comment on the paper by November 15, 1999 (the date was subsequently extended to December 22, 1999). In addition, the NRC held four facilitated public meetings at different locations between September and December 1999. Currently, the NRC Staff is preparing a paper, and plans to brief the Commission, on stakeholder reactions and concerns with the Issues Paper expressed both at the public meetings and in written comment, on the status of the technical analyses, and on recommendations on whether to proceed with rulemaking or other staff actions regarding release of solid materials, and the schedule for future staff actions on this effort. The NRC Staff will hold regular meetings to develop the March Commission paper that are open to the public to better clarify for interested parties the development of the alternatives and issues to be included in the March Commission paper, and to allow observers to comment on the planned development of the paper. As space permits, all interested parties may attend as observers. Time will be allocated for brief statements from the public.

Information about current NRC efforts in this area can be found on a website dedicated to this effort at the following address: *http://www.nrc.gov/NMSS/IMNS/controlsolids.html.* The website includes the Issues Paper, discussion of opportunities for public comment, and summaries of comments at the public meetings held to date.

The public meetings will generally be held at the Nuclear Regulatory Commission offices in Rockville, Maryland, every other Wednesday, beginning February 9, 2000, from 1 p.m. to 3 p.m. in Room T7–A1, Two White Flint North, 11545 Rockville Pike. Those planning to attend the meetings should verify the status of the meeting by checking the NRC public meeting website at *http://www.nrc.gov/NRC/PUBLIC/meet.html.* Also, for planning purposes, observers from the public are requested to notify Roberta Gordon at (301) 415–7555 if they plan to attend.

Dated at Rockville, Maryland, this 28th day of January 2000.

For the Nuclear Regulatory Commission.

Lawrence E. Kokajko,

Acting Chief, Regulations and Guidance Branch, Division of Industrial and Medical Nuclear Safety, Office of Nuclear Material Safety and Safeguards.

[FR Doc. 00–2428 Filed 2–2–00; 8:45 am]

BILLING CODE 7590–01–P

OFFICE OF MANAGEMENT AND BUDGET

Budget Analysis Branch; Final Sequestration Report

AGENCY: Office of Management and Budget—Budget Analysis Branch.

ACTION: Notice of Transmittal of Final Sequestration Report to the President and Congress.

SUMMARY: Pursuant to Section 254(b) of the Balanced Budget and Emergency Control Act of 1985, as amended, the Office of Management and Budget hereby reports that it has submitted its Final Sequestration Report to the President, the Speaker of the House of Representatives, and the President of the Senate.

FOR FURTHER INFORMATION CONTACT: Ellen Balis, Budget Analysis Branch—202/395–4574.

Dated: January 27, 2000.

Robert L. Nabors,

Executive Secretary and Assistant Director for Administration.

[FR Doc. 00–2296 Filed 2–2–00; 8:45 am]

BILLING CODE 3110 –01–P

SECURITIES AND EXCHANGE COMMISSION

Requests Under Review by Office of Management and Budget

[Extension: Rule 2a–7, SEC File No. 270–258, OMB Control No. 3235–0268]

Upon Written Request, Copies Available From: Securities and Exchange Commission, Office of Filings and Information Services, Washington, DC 20549.

Notice is hereby given that under the Paperwork Reduction Act of 1995 (44 U.S.C. 3501), the Securities and Exchange Commission (the ''Commission'') has submitted to the Office of Management and Budget (''OMB''), a request for extension of approval for rule 2a–7 (17 CFR 270.21–7) under the Investment Company Act of 1940 (15 U.S.C. 80a) (the ''Act'').

Rule 2a–7 governs money market funds. Money market funds are open-end management investment companies that differ from other open-end management investment companies in that they seek to maintain a stable price per share, usually $1.00. The rule exempts money market funds from the valuation requirements of the Act and, subject to certain risk-limiting conditions, permits money market funds to use the ''amortized cost method'' of asset valuation or the ''penny-rounding method'' of share pricing.

Rule 2a–7 imposes certain recordkeeping and reporting obligations on money market funds. The board of directors of a money market fund, in supervising the fund's operations, must establish written procedures designed to stabilize the fund's net asset value (''NAV''). The board also must adopt guidelines and procedures relating to certain responsibilities it delegates to the fund's adviser. These procedures and guidelines typically address various aspects of the fund's operations. The fund must maintain and preserve for six years a written copy of both procedures and guidelines. The fund also must maintain and preserve for six years a written record of the board's considerations and actions taken in connection with the discharge of its responsibilities, to be included in the board's minutes. In addition, the fund must maintain and preserve for three years written records of certain credit risk analyses, evaluations with respect to Securities subject to demand features or guarantees, and determinations with respect to adjustable rate securities an asset backed securities. If the board takes action with respect to defaulted securities, events of insolvency, or deviations in share price, the fund must file with the Commission an exhibit to Form N–SAR describing the nature and circumstances of the action. If any portfolio security fails to meet certain eligibility standards under the rule, the fund also must identify those securities in an exhibit to Form N–SAR. After certain events of default or insolvency relating to a portfolio security, the fund must notify the Commission of the event and the actions the fund intends to take in response to the situation.

The recordkeeping requirements in rule 2a–7 are designed to enable Commission staff in its examinations of money market funds to determine compliance with the rule, as well as to ensure that money market funds have established procedures for collecting the information necessary to make adequate credit reviews of securities in their portfolios. The reporting requirements of rule 2a–7 are intended to assist Commission staff in overseeing money market funds.

Commission staff estimates that 949 money market funds are subject to rule 2a–7 each year.[1] The staff estimates that each of these funds spends an average of 336 hours each year to document credit risk analyses, and determinations regarding adjustable rate securities, asset backed securities, and securities

[1] This estimate is based on information in the Visions98 database, compiled by IBC Financial Data, Inc. (Oct. 22, 1999).

subject to a demand feature or guarantee.[2] In addition, each year an estimated average of 10 money market funds each spends approximately 2.5 hours to record (in the board minutes) board determinations and actions in response to certain events of default or insolvency, and to notify the Commission of the event.[3] Finally, Commission staff estimates that in the first year of operation, the board of directors of an average of 10 new money market funds each spends 7 hours to formulate and establish written procedures for stabilizing the fund's NAV and guidelines for delegating certain of the board's responsibilities to the fund's adviser. Based on these estimates, Commission staff estimates the total burden of the rule's paperwork requirements for money market funds to be 319,211 hours.[4] This is an increase from the previous estimate of 196,371 hours. The increase is attributable to updated information from money market funds regarding hourly burdens, and to a more accurate calculation of the component parts of some information collection burdens.

These estimates of burden hours are made solely for the purposes of the Paperwork Reduction Act. The estimates are not derived from a comprehensive or even a representative survey or study of Commission rules.

In addition to the burden hours, Commission staff estimates that money market funds will incur costs to preserve records, as required under rule 2a–7. These costs will vary significantly for individual funds, depending on the amount of assets under fund management and whether the fund preserves its records in a storage facility in hard copy or has developed and maintains a computer system to create and preserve compliance records.[5] Commission staff estimates that the amount an individual fund may spend ranges from $100 per year to $2 million. Based on an average cost of $.0000052 per dollar of assets under management for small and medium-sized funds to $0.000039 per dollar of assets under management for large funds,[6] the staff estimates compliance with rule 2a–7 costs the fund industry approximately $51.6 million.[7] Based on responses from individuals in the money market fund industry, the staff estimates that some of the largest fund complexes have created computer programs for maintaining and preserving compliance records for rule 2a–7. Based on a cost of $0.000068 per dollar of assets under management for large funds, the staff estimates that the total annualized capital/startup costs range from $0 for small funds to $88.4 million for all large funds. Commission staff further estimates, however, that even absent the requirements of rule 2a–7, money market funds would spend at least half of the amount for capital costs ($44.2 million) and for record preservation ($25.8 million) to establish and maintain these records and the systems for preserving them as a part of sound business practices to ensure diversification and minimal credit risk in a portfolio for a fund that seeks to maintain a stable price per share.

The collections of information required by rule 2a–7 are necessary to obtain the benefits described above. Notices to the Commission will not be kept confidential. An agency may not conduct or sponsor, and a person is not required to respond to, a collection of information unless it displays a currently valid control number.

Please direct general comments regarding the information above to: (i) Desk Officer for the Securities and Exchange Commission, Office of Information and Regulatory Affairs, Office of Management and Budget, New Executive Office Building, Washington, DC 20503; and (ii) Michael Bartell, Associate Executive Director, Office of Information Technology, Securities and Exchange Commission, 450 Fifth Street, NW, Washington, DC 20549. Comments must be submitted to OMB within 30 days of this notice.

Dated: January 27, 2000.

Margaret H. McFarland,

Deputy Secretary.

[FR Doc. 00–02387 Filed 2–2–00; 8:45 am]

BILLING CODE 8010–01–M

[2] This average is based on discussions with individuals at money market funds and their advisers. The amount of time may vary significantly for individual money market funds.

[3] This number may vary significantly from year to year.

[4] This estimate is based on the following calculation: $((949 \times 336) + (10 \times 2.5) + 46 \times 7)) = 319{,}211$.

[5] The amount of assets under management in money market funds ranges from approximately $100,000 to $60.9 billion.

[6] For purpose of this PRA submission, Commission staff used the following categories for fund sizes: (i) small—money market funds with $50 million or less in assets under management; (ii) medium—money market funds with more than $50 million up to and including $1 billion in assets under management; and (iii) large—money market funds with more than $1 billion in assets under management.

[7] The staff estimated the annual cost of preserving the required books and records by identifying the annual costs incurred by several funds and then relating this total cost to the average net assets of these funds during the year. With a total of $204 billion under management in small and medium funds, and $1,292.6 billion under management in large funds, the total amount was estimated as follows: ($0.0000052 × $204 billion) + ($0.000039 × $1,292.6 billion) = $51.6 million.

SECURITIES AND EXCHANGE COMMISSION

Request Under Review by the Office of Management and Budget

[Extension: Rule 15c1–7, SEC File No. 270–146, OMB control No. 3235–0134]

Upon Written Request, Copies Available From: Securities and Exchange Commission, Office of Filings and Information Services, Washington, DC 20549.

Notice is hereby given that pursuant to the Paperwork Reduction Act of 1995 (44 U.S.C. 3501 *et seq.*) the Securities and Exchange Commission (''Commission'') has submitted to the Office of Management and Budget a request for extension of the previously approved collection of information discussed below.

Rule 15c1–7 provides that any act of a broker-dealer designed to effect securities transactions with or for a customer account over which the broker-dealer (directly or through an agent or employee) has discretion will be considered a fraudulent, manipulative, or deceptive practice under the federal securities laws, unless a record is made of the transaction immediately by the broker-dealer. The record must include (a) the name of the customer, (b) the name, amount, and price of the security, and (c) the date and time when such transaction took place. The Commission estimates that 500 respondents collect information annually under rule 15c1–7 and that approximately 33,333 hours would be required annually for these collections.

An agency may not conduct or sponsor, and a person is not required to respond to, a collection of information unless it displays a currently valid control number.

General comments regarding the estimated burden hours should be directed to the Desk Officer for the Securities and Exchange Commission at the address below. Any comments concerning the accuracy of the estimated average burden hours for compliance with Commission rules and forms should be directed to Michael E. Bartell, Associate Executive Director, Office of Information Technology, Securities and Exchange Commission, 450 Fifth Street, NW., Washington, DC 20549 and Desk Officer for Securities and Exchange Commission, Office of Information and Regulatory Affairs, Office of Management and Budget, New Executive Office Building, Washington, DC 20503. Comments must be submitted to the Office of Management and Budget within 30 days of this notice.

Dated: January 24, 2000.

Margaret H. McFarland,

Deputy Secretary.

[FR Doc. 00–2388 Filed 2–2–00; 8:45 am]

BILLING CODE 8010–01–M

SECURITIES AND EXCHANGE COMMISSION

[Rel. No. IC–24267; File No. 812–11802]

The Lincoln National Life Insurance Company, et al.

January 28, 2000.

AGENCY: U.S. Securities and Exchange Commission (the ''Commission'' or ''SEC'')

ACTION: Notice of application for an order of approval under Section 26(b) of the Investment Company Act of 1940 (the ''1940 Act'' or ''Act'').

SUMMARY OF APPLICATION: Applicants seek an order to permit The Lincoln National Life Insurance Company (''Lincoln Life''), on behalf of Lincoln National Variable Annuity Account C (the ''Account''), to substitute securities issued by certain management investment companies and held by the Account to support the eAnnuity™ individual variable annuity contract (the ''eAnnuity Contract'' or the ''Contract'') issued by Lincoln Life.

APPLICANTS: The Lincoln National Life Insurance Company and Lincoln National Variable Annuity Account C (together, the ''Applicants'').

FILING DATE: The Application was filed on October 5, 1999.

HEARING OR NOTIFICATION OF HEARING: An Order granting the Application will be issued unless the SEC orders a hearing. Interested persons may request a hearing by writing to the Secretary of the SEC and serving the Applicants with a copy of the request, personally or by mail. Hearing requests must be received by the SEC by 5:30 p.m. on February 23, 2000, and should be accompanied by proof of service on the Applicants in the form of an affidavit or, for lawyers, a certificate of service. Hearing requests should state the nature of the writer's interest, the reason for the request, and the issues contested. Persons may request notification of a hearing by writing to the Secretary of the SEC.

ADDRESSES: Secretary, U.S. Securities and Exchange Commission, 450 Fifth Street, NW, Washington, D.C. 20549–0609. Applicants, Brian Burke, Esq., The Lincoln National Life Insurance Company, 1300 South Clinton Street, Fort Wayne, IN 46802. Copies to Kimberly J. Smith, Esq., Sutherland Asbill & Brennan LLP, 1275 Pennsylvania Avenue, NW, Washington, DC 20004–2415.

FOR FURTHER INFORMATION CONTACT: Lorna MacLeod, Senior Counsel, or Susan Olson, Branch Chief, Office of Insurance Products, Division of Investment Management, at (202) 942–0670.

SUPPLEMENTARY INFORMATION: Following is a summary of the Application. The complete Application is available for a fee from the SEC's Public Reference Branch.

Applicants' Representations

1. Lincoln Life, a stock life insurance company incorporated under the laws of the State of Indiana, is the depositor and sponsor of the Lincoln National Account C. Lincoln Life is wholly owned by Lincoln National Corporation, a publicly-held insurance holding company.

2. The Account is registered under the Act as a unit investment trust (File No. 811–3214). The assets of the Account support certain individual variable annuity contracts, including the eAnnuity Contract, and interests in the Account offered through such contracts have been registered under the Securities Act of 1933 (''1933 Act'') on Form N–4 (Reg. File Nos. 333–50817). Twenty-one sub-accounts are currently available as investment options under the Contract.

3. Each of the twenty-one sub-accounts invests in a corresponding open-end management investment company that is registered on Form N–1A (each a ''Fund'') or a portfolio thereof. The twenty-one funds/portfolios are: Lincoln National Aggressive Growth Fund, Inc., Lincoln National Bond Fund, Inc., Lincoln National Capital Appreciation Fund, Inc., Lincoln National Equity-Income Fund, Inc., Lincoln National Global Asset Allocation Fund, Inc., Lincoln National Growth and Income Fund, Inc., Lincoln National International Fund, Inc., Lincoln National Managed Fund, Inc., Lincoln National Money Market Fund, Inc., Lincoln National Social Awareness Fund, Inc., Lincoln National Special Opportunities Fund, Inc., Delaware Group Premium Fund, Inc.—Growth and Income Series, Delaware Group Premium Fund, Inc.—Global Bond Series, Delaware Group Premium Fund, Inc.—Trend Series, BT Insurance Funds Trust—Equity 500 Index Fund, BT Insurance Funds Trust—Small Cap Index Fund, American Century Variable Portfolios, Inc.—VP International Fund, Baron Capital Funds Trust—Baron Capital Asset Fund, Neuberger Berman Advisors Management Trust—(''AMT'') Partners Portfolio, Neuberger Berman Advisors Management Trust—(''AMT'') Mid Cap Growth Portfolio, Janus Aspen Series—Worldwide Growth Portfolio.

4. The Contract reserves to Lincoln Life the right, subject to Commission approval, to substitute shares of another open-end management investment company for shares of an open-end management investment company held by a sub-account of the Account. The prospectus for the Contract discloses this right.

5. Currently, Contract owners may transfer cash value in unlimited amounts among and between the sub-accounts available as investment options under the Contract without the imposition of a transfer charge. The Contract reserves to Lincoln Life the right to restrict transfer privileges.

6. Applicants state that in 1999 they received notice from Putnam Investment Management, Inc. (''Putnam'') that it no longer wished to serve as sub-adviser to any fund made available through the eAnnuity Contract. Putnam currently serves as sub-advisor to two such portfolios of the Fund: Lincoln National Aggressive Growth Fund (the ''Aggressive Growth Fund'') and Lincoln National Global Asset Allocation fund (the ''Global Asset Allocation Fund''). Lincoln Investment Management, Inc., is the advisor to the fund. Applicants assert that this notice is consistent with Putnam's business plan to make Putnam-managed investments available through financial advisors, including brokers or other financial intermediaries, and not sold directly to investors. The eAnnuity Contract is sold directly to the public via the internet. Applicants state that Putnam further notified Lincoln Life that it would not continue as sub-advisor to the Aggressive Growth Fund and the Global Asset Allocation Fund if they continued to be available through the eAnnuity Contract. At present, Fund management does not seek to replace Putnam as sub-advisor to the two funds, which are available through a number of other Lincoln Life variable contracts that are sold through financial advisors. For this reason, Lincoln Life has determined that the Aggressive Growth Fund and the Global Asset Allocation Fund (the ''Replaced Funds'') are appropriate candidates for substitution within the eAnnuity Contract.

7. The Applicants propose to replace the portfolios with two comparable portfolios that are currently offered through the eAnnuity Contract. Applicants propose to replace shares of the Aggressive Growth Fund with shares of the AMT Mid Cap Growth Portfolio,

which is advised and sub-advised by Neuberger Berman Management, Inc. and Neuberger Berman, LLC, respectively, and shares of the Global Asset Allocation Fund with shares of the Lincoln National Managed Fund (the ''Managed Fund'', together with the AMT Mid Cap Growth Portfolio, the ''Substitute Funds'').

8. The investment objective of the Aggressive Growth Fund is to increase the value of its shares. The fund invests primarily in equity securities of companies comparable to those included in the Russell Mid-Cap Growth Index, but may also invest in convertible bonds, convertible preferred stock, and warrants to purchase common stock. The fund limits its investment in foreign securities to 15% of its assets.

9. The investment objective of the AMT Mid Cap Growth Portfolio is growth of capital. The AMT Mid Cap Growth Portfolio invests primarily in equity securities of mid-capitalization companies, but may also invest up to 35% of its net assets in debt securities, including commercial paper that has received the highest rating. The portfolio limits its investment in foreign currency denominated securities to 20% of its total assets.

10. The investment objective of the Global Asset Allocation Fund is long-term total return consistent with preservation of capital. The fund pursues its investment objective by buying and holding three categories of securities: Equity securities (conservative, growth, aggressive growth and international), fixed-income securities (U.S. fixed-income, international fixed-income and lower-rated fixed-income), and money market securities. The fund invests in securities of both U.S. and foreign issuers. Under normal circumstances, the fund will not invest more than 50% of its total assets in conservative stocks, more than 15% of its assets in Lower-Rated Fixed-Income debt obligations and more than 35% of its asset in any other category.

11. The investment objective of the Managed Fund is maximum long-term total return consistent with prudent investment strategy. The fund is a balanced fund that pursues its investment objective by buying and holding three categories of securities: equity securities of U.S. companies, high and medium grade fixed-income securities and money market securities. The fund may not invest more than 75% of its assets in either the stock or debt obligations categories.

12. The following chart shows the total returns for the Replaced Funds for the past three calendar years and for the six months ended June 30, 1999.

[Figures in percent]

Replaced funds	Six months ended 6/30/99	Calendar year 1998	Calendar year 1997	Calendar year 1996
Lincoln National Aggressive Growth Fund (inception date: February 3, 1994)	4.80	(6.20)	23.09	17.02
Lincoln National Global Asset Allocation Fund (inception date: August 3, 1987	3.49	13.50	19.47	15.04

13. The following chart shows the total returns for the Substitute Funds for the past three calendar years and for the six months ended June 30, 1999.

[Figures in percent]

Substitute funds	Six months ended 6/30/99	Calendar year 1998	Calendar year 1997	Calendar year 1996
AMT Mid Cap Growth Portfolio (inception date: February 3, 1997)	5.13	39.28	17.20 (from Nov. 3, 1997).	N/A
Lincoln National Managed Fund (inception date: April 27, 1983	3.65	12.72	21.82	12.05

14. The following chart shows the approximate size and expense ratios for each of the Replaced Funds.[1]

Replaced funds	Net assets at June 30, 1999 (in thousands)	Calendar year 1998 expense ratio (percent)
Lincoln National Aggressive Growth Fund, June 30, 1999 (inception date: February 3, 1994)	$318,400	0.81
Lincoln National Global Asset Allocation Fund, June 30, 1999 (inception date: August 3, 1987)	499,900	0.91

15. The following chart shows the approximate size and expense ratios for each of the Substitute Funds.[2]

[1] Expense ratios include management fees and operation expenses. Each fund currently pays a monthly management fee based on its average daily net assets at the following annual rates: Aggressive Growth Fund, 0.81% and Global Asset Allocation Fund, 0.91%.

[2] Expense ratios include management fees and operating expenses. Each Substitute Fund currently pays a monthly management fee based on its average daily net assets. The management fee for each Substitute Fund as of June 30, 1999, is as follows: AMT Mid Cap Growth, 1.00% and Managed Fund, 0.39%. Without the voluntary reimbursement of certain operating expenses by NBMI (the Advisor), total expenses for the year ended 12/31/98 for the fund would have been 1.43%

Substitute funds	Net assets at June 30, 1999 (in thousands)	Calendar year 1998 expense ration (percent)
AMT Mid Cap Growth Portfolio, (inception date: November 3, 1997)	$51,700	1.00
Lincoln National Managed Fund (inception date: April 27, 1983)	960,900	0.39

16. By a supplement to the prospectus for the Contract, all owners and perspective owners of the Contract have been notified of Lincoln Life's intention to take the necessary actions, including seeking the order requested by the Application, to substitute portfolios. The supplements advise owners and prospective owners that they will be unable to allocate net purchase payments to, or transfer cash values to, the sub-accounts of the Account corresponding to each of the Replaced Funds after May 1, 2000, and that on the date of the proposed substitution (on or about May 1, 2000, after the relief requested has been obtained and all necessary systems support changes have been made), the Substitute Funds will replace the Replaced Funds as they underlying investments for such sub-accounts. In addition, the supplements will inform owners and prospective owners that Lincoln Life will not exercise any rights reserved by it under the Contract to impose restrictions or fees on transfers until at least thirty days after the proposed substitutions.

17. At least sixty days before the date of the proposed substitutions, affected owners will also be provided with a prospectus for each Substitute Fund which includes current information concerning the Substitute Funds.

18. The proposed substitutions will take place at relative net asset value with no change in the amount of any Contract owners's cash value or death benefit or in the dollar value of his or her investment in either of the sub-accounts. Contract owners will not incur any additional fees or charges as a result of the proposed substitutions nor will their rights or Lincoln Life's obligations under the Contract be altered in any way. All expenses incurred in connection with the proposed substitutions, including legal, accounting and other fees and expenses, will be paid by Lincoln Life. In addition, the proposed substitutions will not impose any tax liability on Contract owners. The proposed substitutions will not cause the Contract fees and charges currently paid by existing Contract owners to be greater after the proposed substitutions than before the proposed substitutions. Lincoln Life does not currently impose any restrictions or fees on transfers under the Contract, and will not exercise any right it may have under the Contract to impose restrictions on transfers under the Contract for a period of at lest thirty days following the proposed substitutions.

19. Within five days after the proposed substitutions any owner who was affected by the substitutions will be sent a written notice informing them that the substitutions were carried out and that they may transfer all cash value under a Contract invested in either or both of the affected sub-accounts to other available sub-account(s). The notice will also reiterate that Lincoln Life will not exercise any right reserved by it under the Contract to impose any restriction or fee on transfers until at least thirty days after the proposed substitution.

Applicants' Legal Analysis

1. Section 26(b) of the Act requires the depositor of a registered unit investment trust holding the securities of a single issuer to obtain Commission approval before substituting the securities held by the trust. Specially, Section 26(b) states:

> It shall be unlawful for any depositor or trustee of a registered unit investment trust holding the security of a single issuer to substitute another security for such security unless the Commission shall have approved such substitution. The Commission shall issue an order approving such substitution if the evidence establishes that it is consistent with the protection of investors and the purposes fairly intended by the policy and provisions of this title.

2. Applicants state that the proposed substitution of shares of the Substitute Portfolios for those of the Replaced Portfolios involves a substitution of securities within the meaning of Section 26(b) of the Act. Applicants therefore request an order from the Commission pursuant to Section 26(b) approving the proposed substitutions.

3. The investment objective of the Aggressive Growth Fund and the AMT Mid Cap Growth Portfolio are substantially similar. While their specific investment policies differ somewhat, both portfolios seek growth or appreciation in value by investing in equity securities of medium-sized growth companies. Applicants assert that, although there are differences in the objectives and policies of the portfolios, their objectives and policies are sufficiently consistent to assure that, following the substitution, the achievement of the core investment goals of the affected owners in the Aggressive Growth Fund will continue to be pursued.

4. Applicants assert that the investment objectives of the Global Asset Allocation Fund and the Managed Fund are substantially similar. Although the Global Asset Allocation Fund invests globally while the Managed Fund only invests in domestic issuers, both portfolios invest in the same broad categories of securities: equity securities, fixed-income securities and money market instruments. Applicants assert that, although there are differences in the objectives and policies of the portfolios, their objectives and policies are sufficiently consistent to assure that following the substitution, the achievement of the core investment goals of the affected owners in the Global Asset Allocation Fund will continue to be pursued.

5. The AMT Mid Cap Growth Portfolio has performed substantially better than the Aggressive Growth Fund since its inception in 1998. The Global Asset Allocation Fund and the Managed Fund performed very similarly over the last three years. While past performance is not necessarily indicative of future performance, Applicants assert that the proposed substitutions are appropriate in light of the performance comparisons of the Replaced Funds and the Substitute Funds.

6. Applicants assert that although the AMT Mid Cap Growth Portfolio currently has a higher expense ratio than the Aggressive Growth Fund, as a newer fund, it has a good potential for further growth in assets and that its expense ratio may come down in the future due to increased assets under management and the potential to leverage the assets of the other nine portfolios offered within the Neuberger Berman Advisers Management Trust.

7. The Managed Fund has a much lower expense ratio and is larger than the Global Asset Allocation Fund.

8. Last year, Putnam informed Applicants that it would no longer serve as adviser to the Aggressive Growth

Fund and the Global Asset Allocation Fund if Lincoln Life continued to make the funds available through the Annuity Contract.

Conclusion

Applicants submit that, for all the reasons stated above, the proposed substitutions are consistent with the protection of investors and the purposes fairly intended by the policy and provisions of the Act.

For the Commission, by the Division of Investment Management, pursuant to delegated authority.

Margaret H. McFarland,

Deputy Secretary.

[FR Doc. 00–2340 Filed 2–2–00; 8:45 am]

BILLING CODE 8010–01–M

SECURITIES AND EXCHANGE COMMISSION

[Release No. 34–42357; File No. SR–PCX–99–50]

Self-Regulatory Organizations; Notice of Filing of Proposed Rule Change by the Pacific Exchange, Inc. Relating to Non-Agency Orders in P/COAST

January 27, 2000.

Pursuant to section 19(b)(1) of the Securities Exchange Act of 1934 (''Act'') [1] and Rule 19b–4 thereunder,[2] notice is hereby given that on November 18, 1999, the Pacific Exchange, Inc. (''PCX'' or ''Exchange'') filed with the Securities and Exchange Commission (''Commission'' or ''SEC'') the proposed rule change as described in Items I, II and III below, which Items have been prepared by the Exchange. The Commission is publishing this notice to solicit comments on the proposed rule change from interested persons.

I. Self-Regulatory Organization's Statement of the Terms of Substance of the Proposed Rule Change

The Exchange is proposing to amend its rules to allow non-agency orders to be executed in the P/COAST system.[3] The text of the proposed rule change is available at the Office of the Secretary, the PCX and at the Commission.

[1] 15 U.S.C. 78s(b)(1).

[2] 17 CFR 240.19b–4.

[3] P/COAST, the ''Pacific Computerized Order Access SysTem,'' is the Exchange's communication, order routing and execution system for equity securities. It operates on a dual processing system, with mainframe computers in San Francisco and Los Angeles. The system allows trading to be integrated from two separate trading floors. *See* PCX Rule 5.25.

II. Self-Regulatory Organization's Statement of the Purpose of, and Statutory Basis for, the Proposed Rule Change

In its filing with the Commission, the Exchange included statements concerning the purpose of and basis for the proposed rule change and discussed any comments it received on the proposed rule change. The text of these statements may be examined at the places specified in Item IV below. The Exchange has prepared summaries, set forth in sections A, B and C below, of the most significant aspects of such statements.

A. Self-Regulatory Organization's Statement of the Purpose of, and Statutory Basis for, the Proposed Rule Change

1. Purpose

Currently, pursuant to PCX Rule 5.25(b)(1), only ''agency'' orders are permitted to be routed through and executed in the P/COAST system.[4] While the PCX Rules do not currently define the term ''agency orders,''[5] the Exchange notes that, in general, all orders are either ''agency'' orders or ''principal'' orders, *i.e.,* orders for the principal account of a registered broker-dealer.[6] In any event, under the Exchange's proposal, the distinction will be abolished so the both agency and principal orders will be permitted to be executed through the P/COAST system.

The Exchange is proposing to eliminate Rule 5.25(b)(1) as a competitive measure. The Exchange believes that the rule change will help to attract new market participants to the PCX and will result in an increase in the amount of order flow currently sent to the Exchange.

The Exchange is not proposing to change its existing rules regarding the priority of bids and offers,[7] which do not currently distinguish between agency and principal orders.[8] Accordingly, agency and principal orders will, in general, be on a par with respect to their priority for execution in the P/COAST system.

2. Basis

The Exchange believes the proposed rule change is consistent with Section 6(b) [9] of the Act, in general, and furthers the objectives of section 6(b)(5),[10] in particular, that it is designed to facilitate transactions in securities, to promote just and equitable principles of trade, to protect investors and the public interest, and to remove impediments to and perfect the mechanism of a free and open market and a national market system.

B. Self-Regulatory Organization's Statement on Burden on Competition

The Exchange does not believe that the proposed rule change will impose any burden on competition that is not necessary or appropriate in furtherance of the purposes of the Act.

C. Self-Regulatory Organization's Statement on Comments on the Proposed Rule Change Received From Members, Participants, or Others

Written comments on the proposed rule change were neither solicited nor received.

[4] *Cf.* Boston Stock Exchange (''BSE'') Rules, ch. XXXIII, sec. 1(d); Cincinnati Stock Exchange (''CSE'') Rules 11.8 and 11.9; Chicago Stock Exchange (''CHX'') Rules, art. XX, Rule 37; and Philadelphia Stock Exchange (''Phlx'') Rule 229.

[5] *Cf.* CSE Rule 11.8(b) (''For purposes of Rule 11.8, a public agency order shall mean any order for the account [of] a person other than a member, which order is represented, as agent, by a member''); CSE Rule 11.9(a)(7) (''The term 'public agency order' means any order for the account of a person other than a member, an Approved Dealer or a person who could become an Approved Dealer by complying with this Rule with respect to his use of the System, which order is presented, as agent, by a User''); CSE Rule 11.9(a)(8) (''The term 'professional agency order' means an order entered by a User as agent for the account of a broker-dealer, a futures commission merchant, or a member of a contract market''); NASD Manual—The Nasdaq Stock Market, Rule 4710(h) (''The term 'agency order' shall mean public customer orders which are executed by the SOES Order Entry Firm on an agency basis. It shall also include, for purposes of these rules, an order entered into SOES on a principal basis by a SOES Order Entry Firm that is not a market maker in the SOES security, in SOES or otherwise, where the SOES Order Entry Firm has contemporaneously received an order from a customer and executed the transaction on a riskless principal basis''); and Phlx Rule 229, Supp. Mat. .02 (''For purposes of the PACE System, an agency order is any order entered on behalf of a public customer, and does not include any order entered for the account of a broker-dealer, or any account in which a broker-dealer or an associated person of a broker-dealer has any direct or indirect interest''). *See also* New York Stock Exchange Information Memo No. 96–36 re New Audit Trail Identifiers (defining the term ''As Agent for Other Member, Competing Market-Maker'' as ''a member or member organization trading as agent for another member's competing market-maker account'' and also defining ''Other Agency'' as a member or member organization trading as agent for ''any other customer (including institutions, non-member broker/dealers and managed accounts'').

[6] *See supra* notes 2–3.

[7] *See, e.g.,* PCX Rule 5.8(c).

[8] However, the Exchange notes that the rule change will not alter the rule that orders for the proprietary accounts of PCX specialists and floor brokers must yield priority, parity and precedence to other orders (unless an exception applies). *See* SEC Rule 11a–1 *et seq.*

[9] 15 U.S.C. 78(f)(b).

[10] 15 U.S.C. 78f(b)(5).

III. Date of Effectiveness of the Proposed Rule Change and Timing for Commission Action

Within 35 days of the date of publication of this notice in the **Federal Register** or within such longer period (i) as the Commission may designate up to 90 days of such date if it finds such longer period to be appropriate and publishes its reasons for so finding or (ii) as to which the Exchange consents, the Commission will:

(A) by order approve such proposed rule change, or

(B) institute proceedings to determine whether the proposed rule change should be disapproved.

IV. Solicitation of Comments

Interested persons are invited to submit written data, views and arguments concerning the foregoing, including whether the proposed rule change is consistent with the Act. Persons making written submissions should file six copies thereof with the Secretary, Securities and Exchange Commission, 450 Fifth Street, NW, Washington, DC 20549–0609. Copies of the submission, all subsequent amendments, all written statements with respect to the proposed rule change that are filed with the Commission, and all written communications relating to the proposed rule change between the Commission and any person, other than those that may be withheld from the public in accordance with the provisions of 5 U.S.C. 552, will be available for inspection and copying in the Commission's Public Reference Room. Copies of such filing will also be available for inspection and copying at the principal office of the PCX. All submissions should refer to File No. SR–PCX–99–50 and should be submitted by February 23, 2000.

For the Commission, by the Division of Market Regulation, pursuant to delegated authority.[11]

Margaret H. McFarland,

Deputy Secretary.

[FR Doc. 00–2389 Filed 2–02–00; 8:45 am]

BILLING CODE 8010–01–M

[11] 15 U.S.C. 78f(b)(5).

DEPARTMENT OF STATE

[Public Notice 3210]

Language and Culture Enrichment Program; Bureau of Educational and Cultural Affairs; Request for Proposals

SUMMARY: The Office of Citizen Exchanges, Youth Programs Division, of the Bureau of Educational and Cultural Affairs announces an open competition for a Language and Culture Enrichment Program. Public and private non-profit organizations meeting the provisions described in IRS regulation 26 CFR 1.501(c) may submit proposals to conduct a four-week homestay-based, English language and cultural enrichment program in July 2000 for 40 students from the New Independent States (NIS) of the former Soviet Union selected for the Freedom Support Act (FSA) Future Leaders Exchange (FLEX) program. Approximately 15 of the participants will be students with physical disabilities who were specially recruited and selected. The remaining 25 students will be from more isolated regions of the NIS, where there is less opportunity for quality English instruction. The purpose of the program is to raise the English capability of these students to the level where they are able to attend regular classes when their academic program starts in fall. Additionally, this program will ease the acculturation process when students transit to their permanent families and communities. Funds requested for this project may not exceed $80,000.

Program Information

Objectives: To prepare a select group of students with special needs to attend school in the fall and perform at a level closer to that of those FSA FLEX students that make up the majority of the program finalists. To provide students with cultural tools and strategies that will foster a successful exchange experience.

Background: Academic year 2000/2001 will be the eighth year of the FSA/FLEX program, which now includes over 7000 alumni. This component of the NIS Secondary School Initiative was initially authorized under the FREEDOM Support Act of 1992 and is funded by annual allocations from the Foreign Operations and Department of State appropriations. The goals of the program are to promote mutual understanding and foster a relationship between the people of the NIS and the U.S.; assist the successor generation of the NIS to develop the qualities it will need to lead in the transformation of those countries in the 21st century; and to promote democratic values and civic responsibility by giving NIS youth the opportunity to live in American society for an academic year.

During the program's early years, there was concern that students from the more remote regions of the NIS might be underrepresented because the lack of English competence in those regions could prevent applicants from meeting the rigorous English language requirements of the FLEX recruitment process, including attaining a reasonable score on the Secondary Level English Proficiency (SLEP) examination. To address this concern, a pre-academic year English language enrichment program was developed so that some students from the remote areas could be selected whose SLEP scores were slightly lower than average. In subsequent years, lack of English competence in the remote regions of the NIS has become less of a problem. However, the Bureau has added a component focusing on students with disabilities, who do have a need for some special training before initiating their academic year program. The enrichment program for which proposals are being solicited here are in support of both groups of students. The essential components of the enrichment program are:

- A four-week course of study in English, approximately 5.5 hours a day.
- Programming that builds on cultural issues that will have been introduced at the pre-departure orientation for all FSA FLEX students.
- Orientation programming that addresses the special needs of the students with disabilities and their unique adjustment issues.
- Lodging with volunteer host families.
- The students' transition to their permanent host families and communities.

Other Components: Two organizations have already been awarded grants to perform the following functions: recruitment and selection of students; targeted recruitment for students with disabilities; assistance in documentation and preparation of IAP–66 forms; preparation of cross-cultural materials; pre-departure orientation; international travel from home to host community and return; facilitation of ongoing communication between the natural parents and placement organizations, as needed; maintenance of a student database and provision of data to Department of State; and ongoing follow-up with alumni upon their return to the NIS.

Additionally, 16 organizations have been selected through a grants competition to place the 2000–2001 FSA FLEX students in schools and homestays for the academic year, to monitor their progress, and to conduct cultural enrichment activities. The organization selected for the Language and Culture Enrichment Program will be asked to interact with the organizations to ensure the students' smooth transition from the pre-academic training to their permanent placements.

Guidelines: Applicants should consult the Project Objectives Goals and Implementation (POGI) guidelines for a detailed statement of work. The program must take place from mid-July to mid-August 2000. The venue for the program should be one with minor distractions to enable students to focus on the coursework and experience life in a typical American family and community. It should be conducive to a smooth transition to the students' permanent placements and have resources that can be drawn upon for cultural enrichment.

Participants will travel on J–1 visas issued by the Department of State using a government program number. The students will be covered by the health and accident insurance policies used by their placement organization. The grantee organization will acknowledge its responsibility to coordinate with the appropriate organization(s) any time treatment is needed for the duration of the students' participation in the enrichment program.

Applicants may assume that grant activity will begin by June 1, 2000. Programs must comply with J–1 visa regulations. Please refer to the Solicitation Package for further information.

Budget Guidelines: Applicants must submit a comprehensive budget for the entire program. One award will be made, not to exceed $80,000. There must be a summary budget as well as breakdowns reflecting both administrative and program budgets. Applicants may provide separate sub-budgets for each program component, phase, location, or activity to provide clarification. See POGI for allowable costs for the program. Please refer to the Solicitation Package for complete budget guidelines and formatting instructions.

Announcement Title and Number: All correspondence with the Bureau concerning this RFP should reference the above title and number ECA/PE/C/PY–00–37.

FOR FURTHER INFORMATION, CONTACT: Youth Programs Division, ECA/PE/C/PY, Room 568, U.S. Department of State, 301 4th Street, S.W., Washington, D.C. 20547, tel. (202) 619–6299, fax (202) 619–5311, e-mail daronson@usia.gov to request a Solicitation Package. The Solicitation Package contains detailed award criteria, required application forms, specific budget instructions, and standard guidelines for proposal preparation. Please specify Bureau Program Officer Diana Aronson on all other inquiries and correspondence.

Please read the complete **Federal Register** announcement before sending inquiries or submitting proposals. Once the RFP deadline has passed, Bureau staff may not discuss this competition with applicants until the proposal review process has been completed.

To Download a Solicitation Package Via Internet: The entire Solicitation Package may be downloaded from the Bureau's website at http://e.usia.gov/education/rfps. Please read all information before downloading.

Deadline for Proposals: All proposal copies must be received at the Bureau of Educational and Cultural Affairs by 5 p.m. Washington, DC time on Monday, February 28, 2000. Faxed documents will not be accepted at any time. Documents postmarked the due date but received on a later date will not be accepted. Each applicant must ensure that the proposals are received by the above deadline.

Applicants must follow all instructions in the Solicitation Package. The original and seven copies of the application should be sent to: U.S. Department of State, SA–44, Bureau of Educational and Cultural Affairs, Ref.: ECA/PE/C/PY–00–37, Program Management, ECA/EX/PM, Room 336, 301 4th Street, SW, Washington, DC 20547.

Applicants must also submit the ''Executive Summary'' and ''Proposal Narrative'' sections of the proposal on a 3.5″ diskette, formatted for DOS. These documents must be provided in ASCII text (DOS) format with a maximum line length of 65 characters. The Bureau will transmit these files electronically to Bureau officers for its review, with the goal of reducing the time it takes to get comments for the Bureau's grants review process.

Diversity, Freedom and Democracy Guidelines

Pursuant to the Bureau's authorizing legislation, programs must maintain a non-political character and should be balanced and representative of the diversity of American political, social, and cultural life. ''Diversity'' should be interpreted in the broadest sense and encompass differences including, but not limited to ethnicity, race, gender, religion, geographic location, socio-economic status, and physical challenges. Applicants are strongly encouraged to adhere to the advancement of this principle both in program administration and in program content. Please refer to the review criteria under the 'Support for Diversity' section for specific suggestions on incorporating diversity into the total proposal. Public Law 104–319 provides that ''in carrying out programs of educational and cultural exchange in countries whose people do not fully enjoy freedom and democracy,'' the Bureau ''shall take appropriate steps to provide opportunities for participation in such programs to human rights and democracy leaders of such countries.'' Proposals should reflect advancement of this goal in their program contents, to the full extent deemed feasible.

Year 2000 Compliance Requirement (Y2K Requirement)

The Year 2000 (Y2K) issue is a broad operational and accounting problem that could potentially prohibit organizations from processing information in accordance with Federal management and program specific requirements including data exchange with the Bureau. The inability to process information in accordance with Federal requirements could result in grantees' being required to return funds that have not been accounted for properly.

The Bureau therefore requires all organizations use Y2K compliant systems including hardware, software, and firmware. Systems must accurately process data and dates (calculating, comparing and sequencing) both before and after the beginning of the year 2000 and correctly adjust for leap years.

Additional information addressing the Y2K issue may be found at the General Services Administration's Office of Information Technology website at http://www.itpolicy.gsa.gov.

Review Process

The Bureau will acknowledge receipt of all proposals and will review them for technical eligibility. Proposals will be deemed ineligible if they do not fully adhere to the guidelines stated herein and in the Solicitation Package. All eligible proposals will be reviewed by the program office, as well as other Bureau officers, where appropriate. Eligible proposals will be forwarded to panels of Department of State officers for advisory review. Proposals may also be reviewed by the Office of the Legal Adviser or by other Bureau elements. Final funding decisions are at the discretion of the Department of State's Under Secretary for Public Diplomacy and Public Affairs. Final technical authority for assistance awards (grants or cooperative agreements) resides with the Bureau's Grants Officer.

Review Criteria

Technically eligible applications will be competitively reviewed according to the criteria stated below. These criteria are not rank ordered and all carry equal weight in the proposal evaluation:

1. Quality of the program idea: Proposals should exhibit originality, substance, precision, and relevance to the Bureau's mission. Integration of language and culture components should adhere to stated objectives of this project.

2. Program planning: Detailed agenda and relevant work plan should demonstrate substantive undertakings and logistical capacity. Agenda and plan should adhere to the program overview and guidelines described above. Refer to POGI regarding elements that should be included in a calendar of activities/timetable.

3. Ability to achieve program objectives: Objectives should be measurable, tangible and flexible. Proposals should clearly demonstrate how the institution will meet the program's objectives and plan.

4. Support of Diversity: Proposals should demonstrate substantive support of the Bureau's policy on diversity. Achievable and relevant features should be cited in both program administration (selection of staff and speakers, program venue, host families) and program content (curriculum, orientation and wrap-up sessions, program meetings, and resource materials).

5. Institutional Capacity: Proposed personnel and institutional resources should be adequate and appropriate to achieve the program or project's goals. Coordinator responsible for curriculum, materials development and instruction should demonstrate relevant ESL/U.S. culture teaching experience and qualifications.

6. Institution's Record/Ability: Proposals should demonstrate an institutional record of successful language/culture programs, including responsible fiscal management and full compliance with all reporting requirements for past Bureau grants as determined by Bureau Grant Staff. The Bureau will consider the past performance of prior recipients and the demonstrated potential of new applicants.

7. Project Evaluation: Proposals should include a plan to evaluate the program's success, both as the activities unfold and at the end of the program. A draft survey questionnaire, tests, or other techniques plus description of a methodology to use to link outcomes to original project objectives is recommended. Successful applicant will be expected to submit a final report after project is concluded.

8. Cost-effectiveness: The overhead and administrative components of the proposal, including salaries and honoraria, should be kept as low as possible. All other items should be necessary and appropriate.

9. Cost-sharing: Proposals should maximize cost-sharing through other private sector support as well as institutional direct funding contributions.

Authority

Overall grant making authority for this program is contained in the Mutual Educational and Cultural Exchange Act of 1961, Public Law 87–256, as amended, also known as the Fulbright-Hays Act. The purpose of the Act is ''to enable the Government of the United States to increase mutual understanding between the people of the United States and the people of other countries * * * to strengthen the ties which unite us with other nations by demonstrating the educational and cultural interests, developments, and achievements of the people of the United States and other nations * * * and thus to assist in the development of friendly, sympathetic and peaceful relations between the United States and the other countries of the world.'' The funding authority for the program above is provided through legislation appropriating funds annually for Department of State's exchange programs.

Notice

The terms and conditions published in this RFP are binding and may not be modified by any Bureau representative. Explanatory information provided by the Bureau that contradicts published language will not be binding. Issuance of the RFP does not constitute an award commitment on the part of the Government. The Bureau reserves the right to reduce, revise, or increase proposal budgets in accordance with the needs of the program and the availability of funds. Awards made will be subject to periodic reporting and evaluation requirements.

Notification

Final awards cannot be made until funds have been appropriated by Congress, allocated and committed through internal Bureau procedures.

Dated: January 27, 2000.

Evelyn S. Lieberman,

Under Secretary for Public Diplomacy and Public Affairs, Department of State.

[FR Doc. 00–2405 Filed 2–2–00; 8:45 am]

BILLING CODE 4710–11–P

DEPARTMENT OF TRANSPORTATION

Office of the Secretary

Reports, Forms and Recordkeeping Requirements; Proposed Agency Information Collection Activity Under OMB Review

AGENCY: Office of the Secretary, DOT.

ACTION: Notice.

SUMMARY: This collection (2105–0517) is submitted to the **Federal Register**. In compliance with the Paperwork Reduction Act of 1995 (44 U.S.C. 3501 *et seq.*), this notice announces one information collection request coming up for renewal. Before submitting the renewal package to the Office of Management and Budget (OMB), the Department of Transportation is soliciting comments on specific aspects of the collection as described below. The ICR describes the nature of the information collection and its expected cost and burden. Comments are invited on: Whether the proposed collection of information is necessary for the proper performance of the functions of the Department, including whether the information will have practical utility; the accuracy of the Department's estimate of the burden of the proposed information collection; ways to enhance the quality, utility and clarity of the information to be collected; and ways to minimize the burden of the collection of information on respondents, including the use of automated collection techniques or other forms of information technology.

All responses to this notice will be summarized and included in the request for OMB approval.

DATES: Comments must be submitted on or before April 3, 2000.

ADDRESSES: Submit written comments identified by the OMB Control Number 2105–0517, by email to charlotte.hackley@ost.dot.gov or by mail to: Charlotte Hackley, M–61, U.S. Department of Transportation, 400 Seventh Street SW., Room 7101, Washington, DC 20590.

FOR FURTHER INFORMATION CONTACT: Charlotte Hackley, (202) 366–4267, and refer to OMB Control Number, 2105–0517.

SUPPLEMENTARY INFORMATION:

Office of the Secretary (OST)

Title: Extension of information collection authority under Transportation Acquisition Regulation (TAR).

Form(s): DOT F 4220.4, DOT F 4220.7, DOT F 4220.43, DOT F 4220.45, DOT F 4220.46, and Form DD 882.

OMB Control Number: 2105–0517.

Affected Public: Individuals or households and businesses or other for-profit organizations.

Abstract: The requested extension of the approved control number covers the information and collection requirements contained in (TAR) 48 CFR Chapter 12 including forms F 4220.4, DOT F 4220.7, DOT F 4220.43, DOT F 4220.45, DOT F 4220.46, and Form DD 882.

Annual Estimated Burden: The annual estimated burden is 30,885 hours.

Issued in Washington, DC, on January 27, 2000.

David J. Litman,

Senior Procurement Executive.

[FR Doc. 00–2407 Filed 2–2–00; 8:45 am]

BILLING CODE 4910–62–P

DEPARTMENT OF TRANSPORTATION

Office of Secretary

Aviation Proceedings, Agreements Filed During the Week Ending January 21, 2000

The following Agreements were filed with the Department of Transportation under the provisions of 49 U.S.C. 412 and 414. Answers may be filed within 21 days after the filing of the application.

Docket Number: OST–2000–6802.

Date Filed: January 18, 2000.

Parties: Members of the International Air Transport Association.

Subject:P='02'≤

PTC23/PTC123 EUR–SEA 0087 dated 21 December 1999

Europe-South East Asia Resolutions r1–r29

PTC23 EUR–SEA 0089 dated 11 January 2000 Technical Correction

Minutes—PTC23 EUR–SEA 0090 dated 11 January 2000

Tables—PTC23 EUR–SEA FARES 0019 dated 11 January 2000

Intended effective date: 1 April 2000

Dorothy W. Walker,

Federal Register Liaison.

[FR Doc. 00–2364 Filed 2–2–00; 8:45 am]

BILLING CODE 4910–62–P

DEPARTMENT OF TRANSPORTATION

Office of the Secretary

Notice of Applications for Certificates of Public Convenience and Necessity and Foreign Air Carrier Permits Filed Under Subpart Q During the Week Ending January 21, 2000

The following Applications for Certificates of Public Convenience and Necessity and Foreign Air Carrier Permits were filed under Subpart Q of the Department of Transportation's Procedural Regulations (See 14 CFR 302.1701 *et seq.*). The due date for Answers, Conforming Applications, or Motions to Modify Scope are set forth below for each application. Following the Answer period DOT may process the application by expedited procedures. Such procedures may consist of the adoption of a show-cause order, a tentative order, or in appropriate cases a final order without further proceedings.

Docket Number: OST–2000–6784.

Dated Filed: January 11, 2000.

Due Date for Answers, Conforming Applications, or Motions to Modify Scope: February 8, 2000.

Description: Application of Bellview Airlines Limited pursuant to 49 U.S.C. Section 41302, 14 CFR Part 211 and Subpart Q, applies for a Foreign Air Carrier Permit authorizing it to conduct foreign scheduled air transportation of persons, property and mail between Lagos, Nigeria and New York (JFK International Airport) in the United States, commencing February 2000.

Docket Number: OST–2000–6801.

Date Filed: January 18, 2000.

Due Date for Answers, Conforming Applications, or Motions to Modify Scope: February 15, 2000.

Description: Application of Spanair, S.A. pursuant to 49 U.S.C. 41301 and Subpart Q, applies for renewal and, to the extent necessary, amendment of its Foreign Air Carrier Permit to engage in scheduled foreign air transportation of persons, property and mail between Spain and Washington, D.C. (Dulles) and to conduct charters in accordance with Part 212 of the Department's Rules, for an indefinite period.

Dorothy W. Walker,

Federal Register Liaison.

[FR Doc. 00–2365 Filed 2–2–00; 8:45 am]

BILLING CODE 4910–62–P

DEPARTMENT OF TRANSPORTATION

Office of the Secretary

[Order 2000–1–25; Docket OST–1999–6249]

Application of Atlantic Coast Jet, Inc. for Certificate Authority

AGENCY: Department of Transportation.

ACTION: Notice of Order to Show Cause.

SUMMARY: The Department of Transportation is directing all interested persons to show cause why it should not issue an order finding Atlantic Coast Jet, Inc., fit, willing, and able, and awarding it a certificate of public convenience and necessity to engage in interstate scheduled air transportation of persons, property, and mail.

DATES: Persons wishing to file objections should do so no later than February 11, 2000.

ADDRESSES: Objections and answers to objections should be filed in Docket OST–1999–6249 and addressed to Department of Transportation Dockets, U.S. Department of Transportation, 400 Seventh Street, SW., Rm. PL–401, Washington, DC 20590, and should be served upon the parties listed in Attachment A to the order.

FOR FURTHER INFORMATION CONTACT: Ms. Carol Woods, Air Carrier Fitness Division (X–56, Room 6401), U.S. Department of Transportation, 400 Seventh Street, SW., Washington, D.C. 20590, (202) 366–2340.

Dated: January 31, 2000.

Robert S. Goldner,

Acting Deputy Assistant Secretary for Aviation and International Affairs,

[FR Doc. 00–2408 Filed 2–2–00; 8:45 am]

BILLING CODE 4910–62–P

DEPARTMENT OF TRANSPORTATION

Office of the Secretary

[Order 2000–1–27; Dockets OST–99–6221 and OST–99–6222]

Applications of Ameristar Air Cargo, Inc. for New Certificate Authority

AGENCY: Department of Transportation.

ACTION: Notice of Order to Show Cause.

SUMMARY: The Department of Transportation is directing all interested persons to show cause why it should not issue orders (1) finding Ameristar Air Cargo, Inc., fit, willing, and able, and (2) awarding it certificates of public convenience and necessity to engage in interstate and foreign charter air transportation of property and mail.

DATES: Persons wishing to file objections should do so no later than February 11, 2000.

ADDRESSES: Objections and answers to objections should be filed in Dockets OST–99–6221 and OST–99–6222 and addressed to the Department of Transportation Dockets (SVC–124, Room PL–401), U.S. Department of Transportation, 400 Seventh Street, SW., Washington, DC 20590 and should be served upon the parties listed in Attachment A to the order.

FOR FURTHER INFORMATION CONTACT: Mrs. Kathy Lusby Cooperstein, Air Carrier Fitness Division (X–56, Room 6401),

U.S. Department of Transportation, 400 Seventh Street, SW., Washington, DC 20590, (202) 366–2337.

Dated: January 31, 2000.

Robert S. Goldner,

Acting Deputy Assistant Secretary for Aviation and International Affairs.

[FR Doc. 00–2409 Filed 2–2–00; 8:45 am]

BILLING CODE 4910–62–P

DEPARTMENT OF TRANSPORTATION

Federal Highway Administration

Environmental Impact Statement; Clark County, NV

AGENCY: Federal Highway Administration (FHWA), DOT.

ACTION: Notice of intent.

SUMMARY: The FHWA is issuing this notice to advise the public that an environmental impact statement will be prepared for a proposed highway project in the cities of Boulder City and Henderson, Clark County, Nevada/

FOR FURTHER INFORMATION CONTACT: Ted L. Bendure, Environmental Program Manager, Federal Highway Administration, 705 N. Plaza, Suite 220, Carson City, NV 89701, Telephone: 775–687–5322, E-mail:ted.bendure@fhwa.dot.gov.

SUPPLEMENTARY INFORMATION: The FHWA, in cooperation with the Nevada Department of Transportation, will prepare an environmental impact statement (EIS) on a proposal to improve U.S. Highway 93 (US 93) in the cities of Boulder City and Henderson, Clark County, Nevada. The proposed project would involve improvements to the US 93 Corridor between the west terminus of the present US 93 highway through Henderson, Nevada (milepost 59±), on the west end and the east terminus of the project on US 93 (milepost 2.5±), a point about 7.6 kilometers (4.7 miles) east of downtown Boulder City which is coincidental with the planned terminus of the US 93 Hoover Dam Bypass project. The project covers a total distance of approximately 16.7 kilometers (10.4 miles) on the present route.

Improvements to the corridor are considered necessary to provide for the existing and projected traffic demand and to correct existing high accident areas. Specifically, the project will evaluate mitigating congestion in the vicinity of Boulder City; replacing the at-grade railroad crossing near Railroad Pass; reducing the high accident rate at the signalized intersection of the Railroad Pass Casino entrance; upgrading the existing US 93/US 95 Interchange; and a tie-in with the US 93 Hoover Bypass Project. The EIS will consider the effects of the proposed project, the No Action alternative, and other alternatives to the proposed project.

Letters describing the proposed action and soliciting comments will be sent to appropriate Federal, State, and local agencies, and to private organizations and citizens who have previously expressed or are known to have interest in this project. A project scoping meeting will be held in Las Vegas, Nevada on February 22, 2000 with the appropriate agencies. In addition, public information meetings will be held throughout the duration of the project and a public hearing will be held for the draft EIS. Public notices will be given annnouncing the time and place of the public meetings and the hearing. The draft EIS will be available for public and agency review and comment prior to the public hearing.

To ensure that the full range of issues related to this proposed action are addressed and all significant issues identified, comments, and suggestions are invited from all interested parties. Comments or questions concerning this proposed action and the EIS should be directed to the FHWA at the address provided above.P='04'≤

(Catalog of Federal Domestic Assistance Program Number 20.205, Highway Planning and Construction. The regulations implementing Executive Order 12372 regarding intergovernmental consultation on Federal programs and activities apply to this program)

Issued on: January 3, 2000.

John T. Price,

Division Administrator, Federal Highway Administration.

[FR Doc. 00–2306 Filed 2–2–00; 8:45 am]

BILLING CODE 4910–22–M

DEPARTMENT OF TRANSPORTATION

Research and Special Programs Administration

Office of Hazardous Materials Safety; Notice of Applications for Modification of Exemption

AGENCY: Research and Special Programs Administration, DOT.

ACTION: List of applications for modification of exemptions.

SUMMARY: In accordance with the procedures governing the application for, and the processing of, exemptions from the Department of Transportation's Hazardous Materials Regulations (49 CFR part 107, subpart B), notice is hereby given that the Office of Hazardous Materials Safety has received the applications described herein. This notice is abbreviated to expedite docketing and public notice. Because the sections affected, modes of transportation, and the nature of application have been shown in earlier **Federal Register** publications, they are not repeated here. Requests for modifications of exemptions (*e.g.* to provide for additional hazardous materials, packaging design changes, additional mode of transportation, etc.) are described in footnotes to the application number. Application numbers with the suffix ''M'' denote a modification request. These applications have been separated from the new applications for exemptions to facilitate processing.

DATES: Comments must be received on or before February 18, 2000.

ADDRESS COMMENTS TO: Records Center, Research and Special Programs Administration U.S. Department of Transportation Washington, DC 20590

Comments should refer to the application number and be submitted in triplicate. If confirmation of receipt of comments is desired, include a self-addressed stamped postcard showing the exemption number.

FOR FURTHER INFORMATION: Copies of the applications are available for inspection in the Records Center, Nassif Building, 400 7th Street SW, Washington, DC or at http://dms.dot.gov.

This notice of receipt of applications for modification of exemptions is published in accordance with Part 107 of the Federal hazardous materials transportation law (49 U.S.C. 5117(b); 49 CFR 1.53(b)).

Issued in Washington, DC, on January 24, 2000.

J. Suzanne Hedgepeth,

Director, Office of Hazardous Material, Exemptions and Approvals.

Application No.	Docket No.	Applicant	Modification of exemption
9847–M	.....	FIBA Technologies, Inc., Westboro, MA [1]	9847
10704–M	.....	Puritan-Bennett Medical Gases (Mallinckrodt, Inc.) Overland Park, KS [2]	10704
11296–M	.....	Heritage Transport, LLC, Indianapolis, IN [3]	11296
11344–M	.....	DuPont SHE Excellence Center, Wilmington, DE [4]	11344
11722–M	.....	CITERGAS, S.A., Civray, FR [5]	11722
11769–M	.....	Hydrite Chemical Company, Brookfield, WI [6]	11769
11777–M	.....	Audoliv ASP, Inc., Ogden, UT [7]	11777

[1] To modify the exemption to eliminate the requirement for an initial qualifying test; to allow for Division 2.3 materials; correct language in paragraphs 7a. thru e. of the exemption.
[2] To modify the exemption to allow for calibration and functional checks of medical analyzers or monitors; lower minimum burst pressure to 340 psig.
[3] To modify the exemption to authorize additional UN standard packaging at the Packing Group II performance level for use as overpacks for waste aerosol cans.
[4] To modify the exemption to allow for the transportation of an additional Class 8 material in tank cars.
[5] To modify the exemption to permit new construction of the non-DOT specification spherical pressure vessels and additions to the product list.
[6] To modify the exemption to allow for the discharge for an additional Class 8 material in UN Intermediate Bulk Containers (IBC) without removing the IBC from the motor vehicle.
[7] To modify the exemption to authorize a design change to allow for side wall attachment studs on a non-DOT specification pressure vessel.

Note: Correction to FR Vol. 64, No. 245, page 71847. ''Modification of Exemptions'' Footnote 8 for 12263–M (Orbital Sciences Corporation RSPA–1999–5597) should have read ''To reissue the exemption originally issued on an emergency basis and modify it to include various version of the device and the scope of its operations'' and Footnote 9 for 12376–M (BBI—Biotech Research Laboratories, Inc. RSPA–1999–6573) should have read 'To reissue the exemption originally issued on an emergency basis to move freezers containing specimen collections in novel drum and vaccine therapies.'' version of the device and the scope of its operations''.

[FR Doc. 00–02361 Filed 2–2–00; 8:45 am]

BILLING CODE 4910–60–M

DEPARTMENT OF TRANSPORTATION

Research and Special Programs Administration

Office of Hazardous Materials Safety; Notice of Applications for Exemptions

AGENCY: Research and Special Programs Administration, DOT.

ACTION: List of applicants for exemptions.

SUMMARY: In accordance with the procedures governing the application for, and the processing of, exemptions from the Department of Transportation's Hazardous Materials Regulations (49 CFR Part 107, Subpart B), notice is hereby given that the Office of Hazardous Materials Safety has received the applications described herein. Each mode of transportation for which a particular exemption is requested is indicated by a number in the ''Nature of Application'' portion of the table below as follows: 1—Motor vehicle, 2—Rail freight, 3—Cargo vessel, 4—Cargo aircraft only, 5—Passenger-carrying aircraft.

DATES: Comments must be received on or before March 6, 2000.

ADDRESS COMMENTS TO: Records Center, Research and Special Programs, Administration, U.S. Department of Transportation, Washington, DC 20590.

Comments should refer to the application number and be submitted in triplicate. If confirmation of receipt of comments is desired, include a self-addressed stamped postcard showing the exemption application number.

FOR FURTHER INFORMATION: Copies of the applications (See Docket Number) are available for inspection at the New Docket Management Facility, PL–401, at the U.S. Department of Transportation, Nassif Building, 400 7th Street, SW, Washington, DC 20590 or at http://dms.dot.gov.

This notice of receipt of applications for new exemptions is published in accordance with Part 107 of the Federal hazardous materials transportation law (49 U.S.C. 5117(b); 49 CFR 1.53(b)).

Issued in Washington, DC, on January 28, 2000.

J. Suzanne Hedgepeth,

Director, Office of Hazardous Materials, Exemptions and Approvals.

NEW EXEMPTIONS

Application No.	Docket No.	Applicant	Regulation(s) affected	Nature of exemption thereof
12396–N	RSPA–2000–6772	United States Alliance Houston, TX.	49 CFR 173.301(h), 173.302(a), 173.34(d).	To authorize the transportation in commerce of a non-DOT specification cylinder as part of a specifically designed device for space flight for use in transporting Nitrogen, Division 2.2. (modes 1, 4)
12397–N	RSPA–2000–6771	FMC Corporation, Philadelphia, PA.	49 CFR 172.203(a), 180.509(1)(2).	To authorize the use of an alternative requalification method for certain DOT specification 111A100W6 tank cars used to transport Class 8 hazardous materials. (mode 2)
12398–N	RSPA–2000–6770	Praxair, Danbury, CT	49 CFR 173.34(d)	To authorize the transportation in commerce of DOT 3A and 3AA cylinders equipped with alternative relief devices for use in transporting Division 2.2 material. (modes 1, 2)
12399–N	RSPA–2000–6769	BOC Gases, Murray Hill, NJ.	49 CFR 173.34(e)	To authorize the use of ultrasonic inspection as an alternative retest method for DOT Specification 3AL cylinders. (modes 1, 2, 3)
12400–N	RSPA–2000–6761	Delta Chemical Corporation, Baltimore, MD.	49 CFR 173.24(b), 173.31(b)(1), 173.31(b)(3), 179.300–12(b), 179.300–13, 179.300–14.	To authorize the transportation of defective multi-unit tank car tanks used for chlorine equipped with Chlorine Institute Emergency ''B'' Kits. (mode 1)
12401–N	RSPA–2000–6762	DG Supplies, Inc., Hamilton, NJ.	49 CFR 172.400, 172.402, 172.504, 173.150–154, 173.201–203, 173.211–213, 173.25, 175.3.	To authorize the manufacture, marking and sale of specially-designed combination packaging for use in transporting liquid and solid hazardous materials with relief from labeling and placarding requirements. (modes 1, 2, 4, 5)
12402–N	RSPA–2000–6763	Taylor-Wharton, Huntsville, AL.	49 CFR 172.301(c), 178.35(f)(2)(i), 178.39(e).	To authorize the manufacture, marking and sale of non-DOT specification cylinders (comparable to DOT Specification 3BN cylinders) equipped with an alternative bottom plug for use in transporting presently authorized hazardous materials. (modes 1, 2, 3, 4, 5)
12403–N	RSPA–2000–6764	Strainrite, Lewiston, ME.	49 CFR 178.517	To authorize the manufacture, marking and sale of a non-bulk container (comparable to a UN Standard 4H2 solid plastic box) for use in transporting hazardous materials or hazardous wastes as presently authorized. (modes 1, 2, 3)
12404–N	RSPA–2000–6765	CBS Corporation, Pittsburgh, PA.	49 CFR 173.403, 173.427.	To authorize the one-time transportation in commerce of a reactor tank for use in transporting radioactive waste. (modes 1, 2)
12405–N	RSPA–2000–6766	Air Products and Chemicals, Inc., Allentown, PA.	49 CFR 173.304(a)(2), 173.304(b).	To authorize an increase in filling density to the cylinder test pressure for the transportation of Division 2.1, 2.2 and 2.3 hazardous materials. (modes 1, 3, 4, 5)
12406–N	RSPA–2000–6767	Occidental Chemical Corporation, Dallas, TX.	49 CFR 173.242	To authorize the manufacture, marking and sale of a custom-designed non-DOT specification tank truck for use in transporting certain Division 5.1 material. (mode 1)
12407–N	RSPA–2000–6768	Qual-X, Inc., Powell, OH.	49 CFR 173.410, 173.412, 173.415, 173.465, 173.466.	To authorize the transportation in commerce of a specifically designed device containing Class 7 hazardous materials. (mode 1)
12411–N	RSPA–2000–6828	International Fuel Cells, South Windsor, CT.	49 CFR 173.212	To authorize the transportation in commerce of dry metal catalysts classified as, Self-heating, solid, inorganic, n.o.s., Division 4.2, in non-DOT specification packaging. (modes 1, 3, 4)

NEW EXEMPTIONS—Continued

Application No.	Docket No.	Applicant	Regulation(s) affected	Nature of exemption thereof
12412–N	RSPA–2000–6827	Great Western Chemical Company, Portland, OR.	49 CFR 172.203(a), 172.302(c), 177.834(h).	To consolidate the exemptions that currently authorize the discharge of hazardous materials in UN Intermediate Bulk Containers (IBC) without removing the IBC from the motor vehicle on which it is transported. (mode 1)

[FR Doc. 00–2362 Filed 2–2–00; 8:45 am]

BILLING CODE 4910–60–M

DEPARTMENT OF TRANSPORTATION

Surface Transportation Board

[STB Docket No. MC–F–20959]

Laidlaw Inc., and Laidlaw Transportation, Inc.—Acquisition and Control—Hotard Coaches, Inc., and Coastliner, d/b/a Mississippi Coast Limousine, Inc.

AGENCY: Surface Transportation Board.

ACTION: Notice Tentatively Approving Finance Transaction.

SUMMARY: In an application filed under 49 U.S.C. 14303, Laidlaw Inc. (Laidlaw), a noncarrier, through its noncarrier subsidiary, Laidlaw Transportation, Inc. (Laidlaw Transportation) (collectively referred to as Laidlaw), seeks to purchase and acquire control of Hotard Coaches, Inc. (Hotard), and Hotard's subsidiary, Coastliner, d/b/a Mississippi Coast Limousine, Inc. (Coastliner), both motor passenger carriers. Persons wishing to oppose the application must follow the rules under 49 CFR 1182.5 and 1182.8. The Board has tentatively approved the transaction, and, if no opposing comments are timely filed, this notice will be the final Board action.

DATES: Comments must be filed by March 20, 2000. Applicant may file a reply by April 3, 2000. If no comments are filed by March 20, 2000, this notice is effective on that date.

ADDRESSES: Send an original and 10 copies of any comments referring to STB Docket No. MC–F–20959 to: Surface Transportation Board, Office of the Secretary, Case Control Unit, 1925 K Street, N.W., Washington, DC 20423–0001. In addition, send one copy of comments to applicant's representative: Fritz R. Kahn, Suite 750 West, 1100 New York Avenue, N.W., Washington, DC 20005–3934.

FOR FURTHER INFORMATION CONTACT: Beryl Gordon, (202) 565–1600. [TDD for the hearing impaired: 1–800–877–8339.]

SUPPLEMENTARY INFORMATION: Laidlaw seeks authority to acquire control of Hotard and Coastliner through the acquisition of all of Hotard's common stock which is being held in a voting trust.[1] Laidlaw states that Hotard will continue to be managed by its president, Ms. Eva Hotard, and will maintain its separate office in New Orleans.

Hotard has limited regular-route authority and holds federally issued authority in Docket No. MC–143881, which authorizes it to provide special and charter operations in Louisiana and Mississippi. Coastliner also provides special and charter operations in Louisiana and Mississippi pursuant to federally issued authority in Docket No. MC–133182.

Laidlaw currently controls motor passenger carriers whose operations, with the exception of those of Greyhound Lines, Inc. (Greyhound), are largely limited to charter and special operations in the United States. Greyhound holds federally issued operating authority in Docket No. MC–1515 and provides mainly nationwide, scheduled regular-route operations. Although Greyhound performs some special and charter operations, according to Laidlaw, Greyhound does not have the same contacts and relationships with patrons as Hotard and Coastliner, within their distinct regional market.[2] The other Laidlaw motor passenger carriers do not conduct operations in the regional markets served by Hotard and Coastliner. Laidlaw asserts that the addition of Hotard and Coastliner will contribute significantly to the breadth of services that Greyhound and the other Laidlaw affiliates are able to provide to the public.

Under 49 U.S.C. 14303(b), we must approve and authorize a transaction we find consistent with the public interest, taking into consideration at least: (1) The effect of the transaction on the adequacy of transportation to the public; (2) the total fixed charges that result; and (3) the interest of affected carrier employees.

Applicant has submitted the information required by 49 CFR 1182.2, including information to demonstrate that the proposed transaction is consistent with the public interest under 49 U.S.C. 14303(b). Specifically, applicant has shown that the proposed transaction will have a positive effect on the adequacy of transportation to the public and will result in no increase in fixed charges and no changes in employment. *See* 49 CFR 1182.2(a)(7). Additional information may be obtained from applicant's representative.

On the basis of the application, we find that the proposed transaction is consistent with the public interest and should be authorized. If any opposing comments are timely filed, this finding will be deemed vacated and, unless a final decision can be made on the record as developed, a procedural schedule will be adopted to reconsider the application. See 49 CFR 1182.6(c). If no opposing comments are filed by the expiration of the comment period, this decision will take effect automatically and will be the final Board action.

Board decisions and notices are available on our website at: ''WWW.STB.DOT.GOV.''

This decision will not significantly affect the quality of the human environment or the conservation of energy resources.

It is ordered:

1. The proposed acquisition and control is approved and authorized, subject to the filing of opposing comments.

2. If timely opposing comments are filed, the findings made in this decision will be deemed as having been vacated.

3. This decision will be effective on March 20, 2000, unless timely opposing comments are filed.

4. A copy of this notice will be served on: (1) the U.S. Department of Transportation, Office of Motor Carrier Safety—HMCE–20, 400 Virginia Avenue, S.W., Suite 600, Washington, DC 20024; (2) the U.S. Department of Justice, Antitrust Division, 10th Street & Pennsylvania Avenue, N.W., Washington, DC 20530; and (3) the U.S. Department of Transportation, Office of the General Counsel, 400 7th Street, S.W., Washington, DC 20590.

Decided: January 28, 2000.

By the Board, Chairman Morgan, Vice Chairman Burkes, and Commissioner Clyburn.

Vernon A. Williams,

Secretary.

[FR Doc. 00–2285 Filed 2–2–00; 8:45 am]

BILLING CODE 4915–00–P

[1] Laidlaw Transportation purchased all of the issued and outstanding shares of the common stock of Hotard and placed them in a voting trust, pursuant to the terms of a Voting Trust Agreement, dated December 21, 1999.

[2] Laidlaw states that Hotard and Coastliner have contacts with casino operators in Louisiana and Mississippi and established relationships with churches, schools, and other institutions in the area. In addition, Laidlaw states that Hotard provides sightseeing services in New Orleans.

DEPARTMENT OF THE TREASURY

Office of the Comptroller of the Currency

Agency Information Collection Activities: Submission for OMB Review; Comment Request

AGENCY: Office of the Comptroller of the Currency (OCC), Treasury.

ACTION: Submission for OMB review; comment request.

SUMMARY: The OCC, as part of its continuing effort to reduce paperwork and respondent burden, invites the

general public and other Federal agencies to take this opportunity to comment on a continuing information collection, as required by the Paperwork Reduction Act of 1995. The OCC may not conduct or sponsor, and a respondent is not required to respond to, an information collection that has been extended, revised, or implemented unless it displays a currently valid Office of Management and Budget (OMB) control number. Currently, the OCC is soliciting comments concerning an extension, without change, of an information collection titled Bank Activities and Operations—12 CFR 7. The OCC also gives notice that it has sent the information collection to OMB for review.

DATES: You should submit your written comments to both OCC and the OMB Reviewer by March 6, 2000.

ADDRESSES: You should send your written comments to the Communications Division, Attention: 1557–0204, Third Floor, Office of the Comptroller of the Currency, 250 E Street, SW, Washington, DC 20219. In addition, you can send comments by facsimile transmission to (202) 874–5274, or by electronic mail to regs.comments@occ.treas.gov.

FOR FURTHER INFORMATION CONTACT: You may request additional information, a copy of the collection, or a copy of the supporting documentation submitted to OMB by contacting Jessie Dunaway or Camille Dixon, (202) 874–5090, Legislative and Regulatory Activities Division (1557-0200), Office of the Comptroller of the Currency, 250 E Street, SW, Washington, DC 20219.

SUPPLEMENTARY INFORMATION: The OCC is proposing to extend OMB approval of the following information collection:

Title: Bank Activities and Operations—12 CFR 7.

OMB Number: 1557–0204.

Form Number: None.

Abstract: This submission covers an existing regulation and involves no change to the regulation or to the information collections embodied in the regulation. The OCC requests only that OMB renew its approval of the information collections in the current regulation.

National banks need these collections of information to ensure that they conduct their operations in a safe and sound manner and in accordance with applicable federal banking statutes and regulations. The collections of information provide needed information for examiners and provide protections for national banks. The collections of information are necessary for regulatory and examination purposes and for national banks to ensure their compliance with federal law and regulations.

The information requirements in 12 CFR part 7 are located as follows:

12 CFR 7.1000(d)(1) (Lease financing of public facilities): The lease agreement must provide that the lessee will become the owner of the building or facility upon the expiration of the lease.

12 CFR 7.1014 (Sale of money orders at nonbanking outlets): The written agreement between a national bank and bonded agent to sell the bank's money orders at a nonbanking outlet should define the responsibilities of both parties, set forth their respective duties, and provide for remuneration of the agent.

12 CFR 7.2000(b) (Other sources of guidance for corporate governance procedures): A national bank shall designate in its bylaws the body of law selected for its corporate governance procedures.

12 CFR 7.2004 (Honorary directors or advisory boards): Any listing of a national bank's honorary or advisory directors (who act in advisory capacities without voting power or the power of final decision in matters concerning bank business) must distinguish between them and the bank's board of directors, or indicate their advisory status.

12 CFR 7.2014(b) (Indemnification of institution-affiliated parties in administrative proceedings or civil actions not initiated by a federal banking agency): A national bank shall designate in its bylaws the body of law selected for making indemnification payments in administrative proceedings or civil actions not initiated by a federal banking agency.

National banks use the information to ensure their compliance with applicable federal banking law and regulations. Further, the collections of information evidence bank compliance with various regulatory requirements. This information assists bank management in the safe and sound operation of the bank. The OCC uses the information in the conduct of bank examinations and as an audit tool to verify bank compliance with law and regulations.

Type of Review: Extension, without change, of a currently approved collection.

Affected Public: Businesses or other for-profit.

Number of Respondents: 1,600.

Total Annual Responses: 1,600.

Frequency of Response: On occasion.

Estimated Total Annual Burden: 480 burden hours.

OCC Contact: Jessie Dunaway or Camille Dixon, (202) 874–5090, Legislative and Regulatory Activities Division, OMB No. 1557–0142, Office of the Comptroller of the Currency, 250 E Street SW, Washington, DC 20219.

OMB Reviewer: Alexander Hunt, (202) 395–7340, Paperwork Reduction Project 1557–0204, Office of Management and Budget, Room 10226, New Executive Office Building, Washington, DC 20503.

COMMENTS: Your comment will become a matter of public record. You are invited to comment on:

(a) Whether the collection of information is necessary for the proper performance of the functions of the agency, including whether the information has practical utility;

(b) Whether the OCC's burden estimate is accurate;

(c) Ways to enhance the quality, utility, and clarity of the information to be collected;

(d) Ways to minimize the burden of the collection on respondents, including through the use of automated collection techniques or other forms of information technology; and

(e) Whether the OCC's estimates of the capital or startup costs and costs of operation, maintenance, and purchase of services to provide information are accurate.

Dated: January 28, 2000.

Mark J. Tenhundfeld,

Assistant Director, Legislative & Regulatory Activities Division.

[FR Doc. 00–2400 Filed 2–2–00; 8:45 am]

BILLING CODE 4810–33–P

Federal Register

Thursday,
February 3, 2000

Part II

Department of Transportation

Federal Aviation Administration

14 CFR Part 91 et al.

Special Flight Rules in the Vicinity of Grand Canyon National Park; Final Rule

DEPARTMENT OF TRANSPORTATION

Federal Aviation Administration

14 CFR Parts 91, 93, 121, and 135

[Docket No. 28537; Amendment Nos. 91–260, 93–79, 121–272, 135–74

RIN 2120–AG97

Special Flight Rules in the Vicinity of Grand Canyon National Park

AGENCY: Federal Aviation Administration (FAA), DOT.

ACTION: Final rule; request for comments.

SUMMARY: On December 31, 1996, the FAA published a final rule, Special Flight Rules in the Vicinity of Grand Canyon National Park. That final rule codified the provisions of Special Federal Aviation Regulation (SFAR) No. 50–2, Special Flight Rules in the Vicinity of Grand Canyon National Park (GCNP); modified the dimensions of the GCNP Special Flight Rules Area (SFRA); established new and modified existing flight-free zones; established new and modified existing flight corridors; established reporting requirements for commercial sightseeing air carriers operating in the SFRA; prohibited commercial sightseeing operations during certain time periods; and limited the number of aircraft that can be used for commercial sightseeing operations in the SFRA. In February 1997 the FAA delayed the effective date for the new and modified flight-free zones, SFRA modification, and corridors portion of the final rule and reinstated portions of and amended the expiration date of SFAR No. 50–2. However, that action did not affect or delay the implementation of the curfew, aircraft limitations, reporting requirements, or other portions of the rule. That extension was subsequently extended until January 31, 2000. This action further delays the effective date for the flight-free zones, SFRA modification, and corridors portions of the December 31, 19996, final rule until January 31, 20001, and amends the expiration date of SFAR 50–2 until the FAA issues new regulations to substantially restore natural quite in GCNP.

EFFECTIVE DATE: The effective date of January 31, 2000, for 14 CFR 93.301, 93.305, and 93.307 is delayed until 0900 UTC January 31, 2001. Section 9 of SFAR No. 50–2 is amended effective January 31, 2000. Comments on this action must be received on or before March 6, 2000.

ADDRESSES: Comments on this final rule should be mailed in triplicate to: Department of Transportation Dockets, Docket No. [FAA 00–], 400 Seventh Street, SW., Washington, DC 2059. Comments may be filed or examined in the Plaza Room 401 on weekdays, except on Federal holidays, between 10:00 a.m. and 5:00 p.m. Comments also may be sent electronically to the Rules Docket by using the following Internet address: http://dms.dot.gov.

FOR FURTHER INFORMATION CONTACT: Mr. Reginald C. Matthews, Manager, Airspace and Rules Division, ATA–400, Office of Air Traffic Airspace Management, Federal Aviation Administration, 800 Independence Avenue, SW., Washington, DC 20591; Telephone: (202) 267–8783.

SUPPLEMENTARY INFORMATION:

Request for Comments on the Rule

Although this action is a final rule, and was not preceded by notice and public procedure, comments are invited. This rule will become effective on the date specified in the **DATES** section. Comments that provide the factual basis supporting the views and suggestions presented are particularly helpful in evaluating the effects of the rule, and in determining whether additional rulemaking is required.

Background

On December 31, 1996, the FAA published three concurrent actions (a final rule, a Notice of Proposed Rulemaking, and a Notice of Availability of Proposed Commercial Air Tour Routes) in the **Federal Register** (62 FR 69310). These actions were part of an overall strategy to reduce further the impact of aircraft noise on the GCNP environment and to assist the National Park Service (NPS) in achieving its statutory mandate imposed by Public Law (Pub. L.) No 100–91 to substantially restore natural quiet in GCNP. The final rule amended part 93 of the Code of Federal Regulations and added a new subpart to codify the provisions of SFAR No. 50–2, modified the dimensions of the GCNP SFRA; established new and modified existing flight-free zones; established new and modified existing flight corridors; and established reporting requirements for commercial sightseeing air carriers operating in the Special Flight Rules Area. In addition, to provide further protection for park resources, the final rule prohibited commercial sightseeing operations in the Zuni Point and Dragon corridors during certain time periods, and placed a temporary limit on the number of aircraft that can be used for commercial sightseeing operations in the GCNP SFRA. These provisions originally were to become effective on May 1, 1997.

On February 21, 1997, the FAA issued a final rule that delayed the implementation of certain sections of the final rule (62 FR 8862; February 26, 1997). Specifically, this action delayed the implementation date, until January 31, 1998, of those sections of the rule that address the SFRA, flight-free zones, and flight corridors, respectively sections 93.301, 93.305, and 93.307. In addition, certain portions of SFAR No. 50–2 were reinstated, and the expiration date was extended. This implementation date was again delayed until January 31, 1999 (62 FR 66248; December 17, 1997). The FAA further delayed the implementation date until January 31, 2000 (64 FR 5152; February 3, 1999).

In a continuing effort to assist the NPS in fulfilling the mandate of Pub. L. 100–91 in the substantial restoration of natural quiet in GCNP, the FAA issued two proposed rules in July 1999. One proposed airspace modifications that would accommodate a new route structure; the other proposed a limitation of commercial air tour operations in the SFRA. In addition, a notice of availability made available maps depicting the new route structure.

The FAA is now in the process of finalizing these regulations. However, these final rules will not be issued until after January 31, 2000. Under these conditions, the FAA finds that there is sufficient justification under 5 U.S.C. 553(b) to issue this rule without notice and prior opportunity for comment.

Economic Evaluation

In issuing the final rule for Special Flight Rules in the Vicinity of the GCNP, the FAA prepared a cost benefit analysis of the rule. A copy of the regulatory evaluation is located in docket No. 28537. That economic evaluation was later revised in a Notice of Clarification (62 FR 58898). In the notice, the FAA concluded that the rule is still cost beneficial. This extension of the effective date for the final rule will not affect that reevaluation, although the delay in the implementation of the extended FFZs will be cost relieving.

The FAA has determined that this regulation imposes no additional burden on any person. Accordingly, it determines that this action (1) is not a significant action under Executive Order 12866; and (2) is not a significant action under Department of Transportation Regulatory Policy and Procedures (44 FR 11034; February 26, 1979). In addition, the FAA certifies that this action will not have a significant economic impact on a substantial

number of small entities under the criteria of the Regulatory Flexibility Act.

Regulatory Flexibility Analysis

As required by the Regulatory Flexibility Act of 1980, as amended, the FAA completed a final regulatory flexibility analysis of the final rule. This analysis was also reevaluated and revised findings were published in the Notice of Clarification referenced above, as a Supplemental Regulatory Flexibility Analysis. This extended delay of the compliance date will not affect that supplemental analysis.

Unfunded Mandates Assessment

Title II of the Unfunded Mandates Reform Act of 1995 (the Act), enacted as Public Law 104–4 on March 22, 1995, requires each Federal agency, to the extent permitted by law, to prepare a written assessment of the effects of any Federal mandate in a proposed or final agency rule that may result in the expenditure of $100 million or more (when adjusted annually for inflation) in any one year by State, local, and tribal governments in the aggregate, or by the private sector. Section 204(a) of the Act, 2 U.S.C. 1534(a), requires the Federal agency to develop an effective process to permit timely input by elected officers (or their designees) of State, local, and tribal governments on a proposed ''significant intergovernmental mandate.'' A ''significant intergovernmental mandate'' under the Act is any provision in a Federal agency regulation that would impose an enforceable duty upon State, local, and tribal governments in the aggregate of $100 million (adjusted annually for inflation) in any one year. Section 203 of the Act, 2 U.S.C. 1533, which supplements section 204(a), provides that, before establishing any regulatory requirements that might significantly or uniquely affect small governments, the agency shall have developed a plan, which, among other things, must provide for notice to potentially affected small governments, if any, and for a meaningful and timely opportunity for these small governments to provide input in the development of regulatory proposals.

This final rule does not contain any Federal intergovernmental or private sector mandates. Therefore, the requirements of Title II of the Unfunded Mandates Reform Act of 1995 do not apply.

Federalism Implications

The FAA has analyzed this amendment under the principles and criteria of Executive Order 13132, Federalism. The FAA has determined that his section will not have a substantial direct effect on the States, on the relationship between the national Government and the States, or on the distribution of power and responsibilities among the various levels of government. Therefore, the FAA has determined that this amendment does not have sufficient federalism implications to warrant the preparation of a Federalism Assessment.

List of Subjects

14 CFR Part 91

Aircraft, Airmen, Air traffic control, Aviation safety, Noise control.

14 CFR Part 93

Air traffic control, Airports, Navigation (Air).

14 CFR Part 121

Aircraft, Airmen, Aviation safety, Charter flights, Safety, Transportation.

14 CFR Part 135

Air taxis, Aircraft, Airmen, Aviation safety.

Adoption of Amendments

Accordingly, the Federal Aviation Administration (FAA) amends 14 CFR parts 91, 93, 121, and 135 as follows:

PART 91—[AMENDED]

1. The authority citation for part 91 continues to read as follows:

Authority: 49 U.S.C. 106(g), 40103, 40113, 40120, 44101, 44111, 44701, 44709, 44711, 44712, 44715, 44716, 44717, 44722, 46306, 46315, 46316, 46502, 46504, 46506–46507, 47122, 47508, 47528–47531.

PART 121—[AMENDED]

2. The authority citation for part 121 continues to read as follows:

Authority: 49 U.S.C. 106(g), 40113, 40119, 44101, 44701–44702, 44705, 44709–44711, 44713, 44716–44717, 44722, 44901, 44903–44904, 44912, 46105.

PART 135—[AMENDED]

3. The authority citation for part 135 continues to read as follows:

Authority: 49 U.S.C. 106(g), 40113, 44701–44702, 44705, 44709, 44711–44713, 44915–44717, 44722.

SFAR No. 50–2 [Amended]

4. In parts 91, 121, and 135, Special Federal Aviation Regulation No. 50–2, Section 9 is revised to read as follows:

SFAR 50–2—Special Flight Rules in the Vicinity of the Grand Canyon National Park, AZ

* * * * *

Section 9. Termination date. Sections 1. Applicability, Section 4, Flight-free zones, and Section 5. Minimum flight altitudes, expire on 0901 UTC, January 31, 2001.

PART 93—SPECIAL AIR TRAFFIC RULES AND AIRPORT TRAFFIC PATTERNS

5. The authority citation for part 93 continues to read as follows:

Authority: 49 U.S.C. 106(g), 40103, 40106, 40109, 40113, 44502, 44514, 44701, 44719, 46301.

The effective date of May 1, 1997, for new Sections 93.301, 93.305, and 93.307 [1] to be added to 14 CFR Part 93 is delayed until 0901 UTC, January 31, 2001.

Issued in Washington, DC, on January 28, 2000.

Jane F. Garvey,

Administrator.

[FR Doc. 00–2406 Filed 1–31–00; 4:15pm]

BILLING CODE 4910–13–M

[1] Published at 61 FR 69330 (December 31, 1996), corrected at 62 FR 2445 (January 16, 1997), delayed at 62 FR 8862 (February 26, 1997) and 62 FR 66248 (December 17, 1997).

Federal Register

Thursday,
February 3, 2000

Part III

Department of Housing and Urban Development

NOFA for Public Housing Drug Elimination Program Gun Buyback Violence Reduction Initiative; Notice of Amendment and Republication; Notice

DEPARTMENT OF HOUSING AND URBAN DEVELOPMENT

[Docket No. FR–4451–N–06]

NOFA for Public Housing Drug Elimination Program Gun Buyback Violence Reduction Initiative; Notice of Amendment and Republication

AGENCY: Office of Public and Indian Housing, HUD.

ACTION: Notice of Amendment and Republication of Notice of Funding Availability (NOFA) for the Public Housing Drug Elimination Program (PHDEP) Gun Buyback Violence Reduction Initiative.

SUMMARY: The Department of Housing and Urban Development (HUD) is amending and republishing its Public Housing Drug Elimination Program Gun Buyback Violence Reduction Initiative NOFA (PHDEP Gun Buyback NOFA), published in the **Federal Register** of November 3, 1999 (64 FR 60080). The PHDEP Gun Buyback NOFA invited public housing authorities (PHAs) to direct FY 1999 PHDEP funds for use in gun buyback programs and made PHDEP set aside matching funds available. This amendment makes clear that while HUD's matching funds are to be drawn only from the FY 1999 PHDEP set aside, PHAs' expenditures are not restricted to FY 1999, but may come from PHDEP grant funds regardless of fiscal year. PHAs that have already applied under the November 3, 1999 NOFA need not re-apply but may seek additional funding.

DATES: Applications may be submitted at any time after publication of this notice. The application period is open until all FY 1999 PHDEP set aside matching funds are awarded. Eligible applications that comply with the requirements of this notice as well as those of the PHDEP Gun Buyback NOFA will be funded on a first-come, first-served basis to the extent that funding remains available.

ADDRESSES: To participate in this initiative and apply for funding, a PHA must submit an application to the U.S. Department of Housing and Urban Development, Grants Management Center, 501 School Street, SW, Suite 800, Washington, DC 20024, Attention: Gun Buyback Initiative. Applications may simply consist of a letter of request as long as it contains the information required by the this notice.

FOR FURTHER INFORMATION CONTACT: Marvin Klepper, Community Safety and Conservation Division, Office of Public and Indian Housing, Department of Housing and Urban Development, 451 Seventh Street, SW, Room 4206, Washington, DC 20410, telephone (202) 708–1197 x 4229. Hearing or speech-impaired individuals may access this number via TTY by calling the toll-free Federal Information Relay Service at 1–800–877–8339. Also, please see HUD's website at http://www.hud.gov/pih/legis/titlev.html for additional PHDEP information.

SUPPLEMENTARY INFORMATION: On November 3, 1999, at 64 FR 60080, HUD published the PHDEP Gun Buyback NOFA, which affirmed gun buybacks to be eligible activities under PHDEP; announced that PHAs could direct PHDEP funds for use in gun buyback programs; and pledged approximately $43.00 in FY 1999 PHDEP matching funds for every $100.00 a PHA spent towards gun buybacks. The source of the matching funds was the 1999 HUD Appropriations Act, which set aside $10,000,000 for ''grants, technical assistance, contracts and other assistance, training, and program assessment and execution.'' Approximately $4,500,000 of this $10,000,000 set aside amount was made available under the PHDEP Gun Buyback NOFA for the development, outreach, technical assistance, training, assessment and execution activities related to gun buyback violence reduction initiatives.

Now that HUD is issuing the formula allocation for FY 2000 PHDEP funding to local PHAs, the Department is hereby advising PHAs that they may devote a portion of these PHDEP grant funds to gun buyback violence reduction initiatives in cooperation with local law enforcement agencies, and that HUD will award a portion of the $4,500,000 in FY 1999 PHDEP set aside matching funds available for gun buyback violence reduction initiatives on a first-come, first-served basis until all these matching funds are awarded.

This notice amends the PHDEP Gun Buyback NOFA requirements to clarify that while HUD's matching funds are to be drawn only from the FY 1999 PHDEP set aside, PHAs may use PHDEP grant funds from any fiscal year (not merely FY 1999 or FY 1999) for gun buybacks. Applicants must still comply with all of the other application submission requirements as stated in the PHDEP Gun Buyback NOFA. For the convenience of applicants, the November 3, 1999 notice is republished below, amended consistent with the discussion above, and to reflect the new Executive Order on Federalism.

Amended PHDEP Gun Buyback NOFA

Accordingly, FR Doc. 99–28856, the Public Housing Drug Elimination Program Gun Buyback Violence Reduction Initiative NOFA (PHDEP Gun Buyback NOFA) published in the **Federal Register** on November 3, 1999 (64 FR 60800), is amended and republished as follows:

I. Authority

The Public Housing Drug Elimination Program is authorized under the Public and Assisted Housing Drug Elimination Act (42 U.S.C. 11901 *et. seq*).

II. Amount Allocated

Public Law 105–276 (the FY 1999 HUD Appropriations Act) appropriated $310,000,000 for the Public and Assisted Housing Drug Elimination Program. Of the total $310,000,000 appropriated for the Public and Assisted Housing Drug Elimination Program, the FY 1999 HUD Appropriations Act also set aside $10,000,000 for ''grants, technical assistance, contracts and other assistance, training, and program assessment and execution''. Approximately $4,500,000 of this $10,000,000 set aside amount is being made available under this notice for the development, outreach, technical assistance, training, assessment and execution activities related to gun buyback violence reduction initiatives.

As discussed in this notice, HUD is encouraging PHAs to program FY 2000 funds or reprogram a portion of their PHDEP grant funds from previous fiscal years to implement and operate gun buyback violence reduction initiatives in cooperation with local law enforcement agencies. Under this notice, HUD will use the $4.5 million set aside amount described in the paragraph above to match up to $10.5 million of PHDEP grant funds that are programmed or reprogrammed to implement and operate gun buyback violence reduction initiatives. PHAs may request to use PHDEP funds for gun buyback violence reduction efforts until the available matching funds are exhausted. The Department will no longer approve PHA applications for further gun buyback violence reduction initiatives under this notice after the available matching funds have been awarded.

III. Background

With almost one gun for every man, woman and child, America is drowning today in a flood of guns and we're paying a heavy price for this proliferation, particularly in urban areas where much of public housing is located. In 1996, we lost more

Americans to gunfire than we lost in the entire Korean War. Currently, over 600 people die in gun-related incidents in the U.S. each week. That's over 30,000 every year. This includes over 1,000 accidental deaths and over 18,000 suicides. Another 100,000 are injured annually in non-fatal shootings.

Our children pay the highest price. The rate of accidental shooting deaths for children under fifteen in the United States is nine times higher than the other 25 industrialized countries *combined.* And the great increase in suicides among teenagers and young adults in the past four decades has been mostly due to an increase in gun related suicides. *Easy access to weapons is the single most overwhelming factor contributing to the high rate of gun deaths and injuries in this country.*

In an effort to curtail the hazards of accidental shootings, suicides, the tragedies of domestic violence, the dangers of gun violence, and the devastating effects that often accompany such acts, police agencies and local community organizations around the country have created various types of gun buyback initiatives. Gun reduction efforts operate on the premise that accidental shootings, unintentional injuries, suicides and violent crimes can be reduced in communities if there are fewer weapons available with which to commit such acts. PHAs have an important role to play in the reduction of the number of guns and incidents of gun-related violence in our communities.

HUD is sponsoring the initiative announced in this notice through its Public Housing Drug Elimination Program to promote the cooperation of PHAs and local law enforcement agencies in conducting gun buyback initiatives aimed at reducing accidental or unintentional shootings, suicides, domestic violence and other forms of gun violence. HUD is inviting PHAs who are recipients of PHDEP funding to program or reprogram a portion of their PHDEP funding to implement gun reduction initiatives in their localities. To encourage the participation of PHAs in this initiative, HUD will provide a participating PHA with additional funding to increase the amounts available for gun buybacks and maximize the number of guns taken out of circulation, and for the development, outreach, technical assistance, training, assessment and execution activities related to gun buyback violence reduction initiatives. Funding being made available for this purpose will be equal to approximately 43 percent of the amount of PHDEP funding the PHA devotes to the gun buyback violence reduction initiative.

In addition to reducing the number of accidental shootings, suicides, domestic and gun violence, gun reductions efforts have other positive aspects for housing and community residents such as:

•Raising public consciousness about community safety and soliciting neighborhood participation in crime control efforts

•Acting as a visible deterrent to criminal activity

•Increasing police presence in communities

•Establishing stronger bonds between the community and the police, which might aid in more cooperative crime prevention and crime resolutions

•Increasing trust in the police on the part of the community

•Affording the community an active role in the fight against accidental shootings, suicides, domestic violence, violent crimes and firearm related criminal activity

•Involving community businesses as cosponsors of these programs, which could bring about more resources and publicity in support of the gun reduction efforts.

While these factors and reports of the success of gun buyback initiatives have been sufficiently favorable to encourage HUD to undertake this effort, the total amount of HUD assistance being devoted to this effort under this notice is capped at a total of $10.5 million PHDEP program funding, plus the additional matching $4.5 million. HUD will sponsor an independent assessment of this initial effort to more accurately and objectively determine the effectiveness of such initiatives before expanding this effort further. PHAs and local law enforcement agencies participating in the initiative under this notice may be contacted to participate in this assessment.

IV. Application Procedures and Requirements

A. General Overview

PHDEP funds are made available to a PHA to be used in a manner consistent with the PHA's PHDEP plan to address drug-related, violent and criminal activity in and around public housing. Therefore, to participate in this initiative, a PHA must program or reprogram a portion of the funds in its PHDEP plan for gun buyback violence reduction activities. Before funds are awarded under this notice, a PHA will have to submit a reprogramming request for HUD approval, or include a gun buyback initiative as part of its PHDEP plan. A PHA that has not yet submitted a PHDEP plan for FY 2000 formula funding but that wishes to participate in this initiative using FY 2000 funds may submit a letter of intent (or a ''programming request'') that complies with the requirements of this notice. HUD will review each reprogramming request or letter of intent to program funds as it is received and upon approval of the request will authorize additional funding at a rate of approximately $43 for every $100 dollars of PHDEP funding that qualifies under this initiative. This represents an additional 43 percent of funding for the PHA's gun buyback violence reduction. HUD approval will consist of HUD signing off on the programming or reprogramming request and MOU (an executed agreement to carry out the gun buyback initiative) between the PHA and the local police, and, in the case of reprogramming, having HUD amend the PHDEP grant award to the PHA to support the gun reduction effort.

Because of the security issues involved, the gun buyback activities must be conducted by the local law enforcement agency. PHDEP funds for this gun reduction initiative fall under the categories of eligible PHDEP activities of ''programs designed to reduce use of drugs in and around public or federally assisted low-income housing projects, including drug-abuse prevention, intervention, referral, and treatment programs'', as provided in 42 U.S.C. 11903(a)(6) and, under appropriate circumstances, reimbursement of local law enforcement agencies for additional security and protective services, as provided in 42 U.S.C. 11903(a)(2). Funds for buyback activities may not be drawn until the grantee has executed an agreement or Memorandum of Understanding for the additional law enforcement services. The full amount of PHDEP funds that are programmed or reprogrammed should be used for the actual buyback costs. HUD also strongly recommends that the additional 43 percent of funding made available be used for gun buyback costs to maximize the number of guns taken out of circulation.

In addition to the use of PHDEP funds and the additional funding made available under this NOFA, PHAs may and are encouraged to use funding from other sources, such as contributions from local government or the private sector, for their gun buyback/violence reduction initiatives. PHAs may, for example, negotiate with businesses in the community that vouchers exchanged for guns under the initiative provide an additional discount or value increase when redeemed at that business. PHAs and local law enforcement agencies are

also strongly encouraged to seek out and obtain community cooperation and resources to leverage the costs of the development, outreach, technical assistance, training, assessment and execution activities related to the initiative, because a community-wide effort is likely to have the greatest positive impact.

B. Eligible Applicants

PHAs that are (1) recipients of PHDEP funding, (2) devoting a portion of that funding to gun buyback violence reduction initiatives, and (3) implementing their gun buyback initiatives in cooperation with local law enforcement agencies, as evidenced by letters of intent and executed agreement, may apply for a portion of the additional $4,500,000 matching funding under this notice.

C. Amount of Funding per Applicant

Consistent with this notice, HUD will permit a PHA to program or reprogram up to $500,000 of its PHDEP funding to gun buyback violence reduction initiatives. In addition to the amount programmed or reprogrammed, PHAs will receive an additional amount of funding equal to approximately 43 percent of the PHDEP dollars devoted to the gun buyback initiative.

D. Eligible Activities

Police conducting the buyback activity should accept for buyback firearms as defined under Federal, State or local law. The Federal law definition of a firearm is found at 18 U.S.C. 921(a)(3). In deference to local conditions and judgments, HUD will consider a wide range of gun buyback violence reduction activities, in accordance with the following:

1. *Form of buyback exchange.* HUD encourages these initiatives to offer gift certificates, food vouchers, certificates for merchandise such as toys, or other incentives of value to those who turn in guns, in addition to or in place of cash payments.

2. *Amount of value per exchange.* HUD suggests value equivalent to $50 of the HUD assistance provided to be offered for each gun exchanged. Additional value in the form of discounts or extra merchandise made available by businesses participating in the initiative may also be offered.

3. *Site of gun buyback activities.* While PHDEP activities must be planned to reduce drug-related, violent and criminal activity in or around the premises of public housing, perpetrators of gun violence are frequently non-resident predators of public housing. Gun buyback activities, therefore, do not need to be conducted on the PHA premises in order to be effective. However, it is anticipated that the gun reduction effort will have a noticeable impact on reducing the number of guns and the risk of unintentional shootings in the homes and communities of public housing residents.

4. *Disposal of guns.* Once the police collect the weapons from the buyback initiatives, the guns must be destroyed so as not to be put back into use or circulation, unless law enforcement needs call for another action, such as preservation of a gun as evidence or a determination of whether a gun was stolen or used in the commission of a crime. If a gun is determined to be stolen, it must be returned to its lawful owner. Guns may not be resold or exchanged for value, except in connection with their destruction and conversion to scrap; however, a gun determined to be a curio or relic under 27 CFR 178.11 may be donated to a State or Federal museum. Local law enforcement agencies will be required to include the following recovery, tracing and destruction procedures in their disposal of firearms obtained under this initiative:

(a) Certain firearms defined under the National Firearms Act (NFA), 26 U.S.C. 5845(a), *e.g.,* short-barreled shotguns, generally must be registered with the Bureau of Alcohol, Tobacco, and Firearms (ATF). Local police will consult with the ATF where NFA firearms are surrendered in a buyback program.

(b) Local police will conduct a search of each surrendered firearm in the National Crime Information Center (NCIC).

(c) Where available, local police will test each surrendered firearm using an automated ballistics information system such as IBIS or DRUGFIRE.

(d) Where appropriate, certain surrendered firearms should be traced. For example, firearms possessed in violation of local law or ordinance, NFA firearms, firearms with an obliterated serial number, or firearms that are determined by local law enforcement to be associated with crime must be traced where possible.

E. Application Submission Requirements

Each application for funding under this notice must include the following:

1. A written statement briefly describing which activities in the PHA's PHDEP plan would be reprogrammed, and the resulting reprogrammed amount PHDEP funding to be used for the gun buyback reduction activities; or in the case of FY 2000 funding, the amount of FY 2000 funds to be programmed for a gun buyback initiative;

2. A brief description of the proposed gun buyback initiative, including the gun recovery, tracing, and destruction procedures that will be followed, in accordance with the requirements and guidelines of this notice;

3. *Letters of intent.* A letter of intent signed by the chief of the local law enforcement agency to conduct the gun buyback initiative in accordance with the description submitted, and a letter of intent from the chief executive officer (generally the mayor or county executive) of the unit of local government for the jurisdiction indicating the cooperation and support of the local jurisdiction.

F. Award Process

As HUD receives applications, it will log them in by date and time. HUD will notify each PHA applicant that it is eligible to reprogram or program its PHDEP funds in the amount indicated in the application until a total of $10.5 million of PHDEP funding has been designated eligible for this gun buyback initiative. Before additional funds are awarded, a PHA that is reprogramming activities will be required to submit its formal programming request describing which activities in the PHA's PHDEP plan are being reprogrammed, and the reprogrammed amount of PHDEP funding to be used for the gun buyback reduction activities. All PHAs must also submit an executed agreement with the local law enforcement agency to conduct the gun buyback initiative in accordance with the description in the programming or reprogramming request. Upon approval of a PHA's reprogramming request and executed agreement, HUD will award the additional 43 percent of funding through an amendment to the PHDEP grant agreement. Awards of the additional matching funds for FY 2000 applications will be made upon approval of the PHDEP plan and executed agreement. All grants to PHAs and their sub-grants to local law enforcement agencies are subject to the applicable administrative requirements for grants of 24 CFR part 85, including the monitoring and reporting program performance requirements of § 85.40 and the financial reporting requirements of § 85.41.

V. Certifications and Findings

Environmental Impact

This notice does not direct, provide for assistance or loan and mortgage insurance for, or otherwise govern or regulate, real property acquisition,

disposition, leasing, rehabilitation, alteration, demolition, or new construction, or establish, revise or provide for standards for construction or construction materials, manufactured housing, or occupancy. Accordingly, under 24 CFR 50.19(c)(1), this notice is categorically excluded from environmental review under the National Environmental Policy Act of 1969 (42 U.S.C. 4321).

Paperwork Reduction Act Statement

The information collection requirements for the Public Housing Drug Elimination Program were submitted to the Office of Management and Budget for review under the provisions of the Paperwork Reduction Act of 1995 (44 U.S.C. 3501–3520) and have been assigned OMB control number 2577–0124. An agency may not conduct or sponsor, and a person is not required to respond to, a collection of information unless the collection displays a valid control number.

Federalism, Executive Order 13132

Executive Order 13132 (entitled ''Federalism'') prohibits, to the extent practicable and permitted by law, an agency from promulgating a regulation that has federalism implications and either imposes substantial direct compliance costs on State and local governments and is not required by statute, or preempts State law, unless the relevant requirements of section 6 of the Executive Order are met. This notice does not have federalism implications and does not impose substantial direct compliance costs on State and local governments or preempt State law within the meaning of the Executive Order.

Catalog of Domestic Assistance Number

The Catalog of Domestic Assistance number for the Public Housing Drug Elimination Program is 14.854.

Dated: January 28, 2000.

Harold Lucas,

Assistant Secretary for Public and Indian Housing.

[FR Doc. 00–2431 Filed 1–31–00; 4:50 pm]

BILLING CODE 4210–33–P

Federal Register

Thursday,
February 3, 2000

Part IV

Department of Housing and Urban Development

24 CFR Part 206

Home Equity Conversion Mortgage Insurance; Right of First Refusal Permitted for Condominium Associations; Final Rule

DEPARTMENT OF HOUSING AND URBAN DEVELOPMENT

24 CFR Part 206

[Docket No. FR–4267–F–02]

RIN 2502–AG93

Home Equity Conversion Mortgage Insurance; Right of First Refusal Permitted for Condominium Associations

AGENCY: Office of the Assistant Secretary for Housing—Federal Housing Commissioner, HUD

ACTION: Final rule.

SUMMARY: This final rule removes, for the Home Equity Conversion Mortgage (HECM) insurance program only, the restriction on FHA mortgage insurance for a dwelling unit in a condominium project where the condominium association has a right of first refusal.

DATES: *Effective Date:* March 6, 2000.

FOR FURTHER INFORMATION CONTACT: Vance Morris, Director, Home Mortgage Insurance Division, Room 9266, Department of Housing and Urban Development, 451 Seventh Street, SW, Washington, DC 20410, telephone (voice) (202) 708–2700. (This is not a toll-free number.) Hearing-impaired or speech-impaired individuals may access the voice telephone listed by calling the Federal Information Relay Service during working hours at 1–800–877–8339.

SUPPLEMENTARY INFORMATION:

Background

HUD published an interim rule on April 9, 1998 (63 FR 17654) to permit a condominium unit owner to obtain an FHA-insured Home Equity Conversion Mortgage (HECM) when the condominium association holds a right of first refusal. The interim rule created an exception to the general policy for FHA single family programs which bars most rights of first refusal, including all rights of first refusal held by condominium associations. The interim rule does not permit condominium associations to exercise their rights of first refusal to engage in practices that violate the Fair Housing Act, and the Department stated in the preamble to the interim rule that all of its enforcement authority would be used if illegal discriminatory practices occur as a result of the exercise of a right of first refusal.

Public Comment

HUD received one public comment on the interim rule. It suggested that the exception created by the interim rule for condominiums be expanded to include planned unit developments (PUDs), to permit HUD to insure HECMs on property in PUDs where a homeowner association holds a right of first refusal. The Department will consider this suggestion in the future, and may go forward with further rulemaking if it is decided that PUDs should be included in the same exception as condominiums. At this time, however, the Department has not determined that such a change is needed. It is appropriate to conclude this rulemaking by adopting the interim rule as a final rule without change.

Findings and Certifications

Regulatory Flexibility Act

The Secretary, in accordance with the Regulatory Flexibility Act (5 U.S.C. 605(b)), has reviewed and approved this interim rule, and in doing so certifies that this interim rule will not have a significant economic impact on a substantial number of small entities. This rule removes the restriction on FHA mortgage insurance for a dwelling unit in a condominium project where the condominium association has a right of first refusal to purchase units that are offered for sale.

Environmental Finding

A Finding of No Significant Impact with respect to the environment was made at the interim rule stage in accordance with HUD regulations in 24 CFR part 50 that implement section 102(2)(C) of the National Environmental Policy Act of 1969 (42 U.S.C. 4332). This Finding of No Significant Impact is available for public inspection between 7:30 a.m. and 5:30 p.m. weekdays in the Office of the Rules Docket Clerk, Office of General Counsel, Department of Housing and Urban Development, Room 10276, 451 7th Street S.W., Washington, D.C. 20410.

Executive Order 13132, Federalism

Executive Order 13132 (entitled ''Federalism'') prohibits, to the extent practicable and permitted by law, an agency from promulgating a regulation that has Federalism implications and either imposes substantial compliance costs on State and local governments or is not required by statute, or preempts State law, unless the relevant requirements of section 6 of the Executive Order are met. This final rule does not have Federalism implications and does not impose substantial direct compliance costs on State and local governments or preempt State law within the meaning of the Executive Order.

Unfunded Mandates Reform Act

Title II of the Unfunded Mandates Reform Act of 1995 (Pub. L. 104–4; approved March 22, 1995) (UMRA) establishes requirements for Federal agencies to assess the effects of their regulatory actions on State, local, and tribal governments, and on the private sector. This interim rule does not impose any Federal mandates on any State, local, or tribal governments, or on the private sector, within the meaning of the UMRA.

Catalog of Domestic Federal Assistance

The Catalog of Federal Domestic Assistance number for the Home Equity Conversion Mortgage Program is 14.183.

List of Subjects in 24 CFR Part 206

Aged, Condominiums, Loan programs—housing and community development, Mortgage insurance, Reporting and recordkeeping requirements.

Accordingly, the interim rule published at 63 FR 17654, April 9, 1998, is adopted as final without change.

Dated: January 20, 2000.

William C. Apgar,

Assistant Secretary for Housing— Federal Housing Commissioner.

[FR Doc. 00–2316 Filed 2–2–00; 8:45 am]

BILLING CODE 4210–27–P

Reader Aids

Federal Register

Vol. 65, No. 23

Thursday, February 3, 2000

CUSTOMER SERVICE AND INFORMATION

Federal Register/Code of Federal Regulations

General Information, indexes and other finding aids	**202–523–5227**
Laws	**523–5227**
Presidential Documents	
Executive orders and proclamations	**523–5227**
The United States Government Manual	**523–5227**
Other Services	
Electronic and on-line services (voice)	**523–4534**
Privacy Act Compilation	**523–3187**
Public Laws Update Service (numbers, dates, etc.)	**523–6641**
TTY for the deaf-and-hard-of-hearing	**523–5229**

ELECTRONIC RESEARCH

World Wide Web

Full text of the daily Federal Register, CFR and other publications:

http://www.access.gpo.gov/nara

Federal Register information and research tools, including Public Inspection List, indexes, and links to GPO Access:

http://www.nara.gov/fedreg

E-mail

PENS (Public Law Electronic Notification Service) is an E-mail service for notification of recently enacted Public Laws. To subscribe, send E-mail to

listserv@www.gsa.gov

with the text message:

subscribe PUBLAWS-L your name

Use listserv@www.gsa.gov only to subscribe or unsubscribe to PENS. We cannot respond to specific inquiries.

Reference questions. Send questions and comments about the Federal Register system to:

info@fedreg.nara.gov

The Federal Register staff cannot interpret specific documents or regulations.

FEDERAL REGISTER PAGES AND DATE, FEBRUARY

4753–4864 1
4865–5218 2
5219–5406 3

CFR PARTS AFFECTED DURING FEBRUARY

At the end of each month, the Office of the Federal Register publishes separately a List of CFR Sections Affected (LSA), which lists parts and sections affected by documents published since the revision date of each title.

3 CFR

Proclamations:
7270 5217
7271 5219

5 CFR

581 4753
582 4753

7 CFR

301 .....4865, 5221
981 4867
Proposed Rules:
54 4780

12 CFR

Proposed Rules:
Ch. I 4895
611 5286

14 CFR

39 .....4754, 4755, 4757, 4760, 4761, 4870, 5222, 5228, 5229, 5235, 5238, 5241, 5243
71 .....4871, 4872, 4873, 4874
91 5396
93 5396
97 .....4875, 4877, 4879
121 5396
135 5396
Proposed Rules:
21 5224
25 5024
39 .....4781, 4782, 4784, 4786, 4788, 4790, 4792, 4793, 4897, 4900, 4902, 4904, 4906
71 .....4910, 4911
91 5024
108 4912
109 4912
111 4912
121 4912
125 5024
129 4912
191 4912

18 CFR

Proposed Rules:
382 5289

21 CFR

876 4881
1308 5024
Proposed Rules:
1310 4913

24 CFR

206 5406

29 CFR

Proposed Rules:
1910 4795

30 CFR

938 4882

34 CFR

676 4886

36 CFR

Proposed Rules:
242 5196
1234 5295

38 CFR

Proposed Rules:
21 4914

39 CFR

111 4864
Proposed Rules:
111 4918

40 CFR

52 .....4887, 5245, 5252, 5259, 5262, 5264
Proposed Rules:
52 .....5296, 5297, 5298
130 4919

42 CFR

Proposed Rules:
36 4797

45 CFR

1303 4764

47 CFR

1 4891
Ch. I 5267
Proposed Rules:
73 .....4798, 4799, 4923
76 4927
95 4935

48 CFR

203 4864
209 4864
225 4864
249 4864
Proposed Rules:
30 4940

49 CFR

195 4770

50 CFR

17 .....4770, 52680
18 52750
679 .....4891, 4892, 4893, 5278, 5283, 5284, 5285
Proposed Rules:
17 .....4940, 5298
100 5196
622 5299
648 4941

REMINDERS

The items in this list were editorially compiled as an aid to Federal Register users. Inclusion or exclusion from this list has no legal significance.

RULES GOING INTO EFFECT FEBRUARY 3, 2000

INTERIOR DEPARTMENT

Fish and Wildlife Service

Marine mammals:
- Incidental taking; authorization letters, etc.—
  - Oil and gas industry activities; polar bears and Pacific walruses; published 2-3-00

INTERIOR DEPARTMENT

Minerals Management Service

Outer Continental Shelf; oil, gas, and sulphur operations:
- Documents incorporated by reference; update; published 1-4-00

COMMENTS DUE NEXT WEEK

AGRICULTURE DEPARTMENT

Agricultural Marketing Service

Avocados grown in—
- Florida; comments due by 2-11-00; published 12-13-99

Melons grown in—
- Texas; comments due by 2-9-00; published 1-10-00

Raisins produced from grapes grown in—
- California; comments due by 2-8-00; published 12-10-99

COMMERCE DEPARTMENT

International Trade Administration

Watches, watch movements, and jewelry:
- Duty-exemption allocations—
  - Virgin Islands, Guam, American Samoa, and Northern Mariana Islands; comments due by 2-7-00; published 1-6-00

COMMERCE DEPARTMENT

National Oceanic and Atmospheric Administration

Fishery conservation and management:
- Alaska; fisheries of Exclusive Economic Zone—
  - Pollock; comments due by 2-8-00; published 12-10-99
- Atlantic highly migratory species—
  - Atlantic pelagic longline fishermen; time/area closures; hearings and Advisory Panel meetings; comments due by 2-11-00; published 12-28-99
- Caribbean, Gulf, and South Atlantic fisheries—
  - Gulf of Mexico reef fish; comments due by 2-10-00; published 1-26-00
- West Coast States and Western Pacific fisheries—
  - Western Pacific Region pelagic; comments due by 2-10-00; published 12-27-99

Marine mammals:
- Incidental taking—
  - San Francisco-Oakland Bay Bridge, CA; pile installation demonstration project; comments due by 2-7-00; published 1-7-00

COMMODITY FUTURES TRADING COMMISSION

Commodity pool operators and commodity trading advisors:
- Advisors that provide advice by means of various media; registration exemption; comments due by 2-7-00; published 12-7-99

ENERGY DEPARTMENT

Energy Efficiency and Renewable Energy Office

Consumer products; energy conservation program:
- Central air conditioners and heat pumps; energy conservation standards; comments due by 2-7-00; published 11-24-99

ENVIRONMENTAL PROTECTION AGENCY

Air programs:
- Stratospheric ozone protection—
  - Essential-use allowances; allocation; comments due by 2-7-00; published 1-6-00

Air quality implementation plans; approval and promulgation; various States:
- Kansas; comments due by 2-10-00; published 1-11-00
- Missouri; comments due by 2-11-00; published 1-12-00
- Tennessee; comments due by 2-7-00; published 1-7-00

Hazardous waste:
- Identification and listing—
  - Exclusions; comments due by 2-7-00; published 12-9-99

Pesticides; tolerances in food, animal feeds, and raw agricultural commodities:
- Tebufenozide; comments due by 2-7-00; published 12-8-99

Solid wastes:
- Municipal solid waste landfill permit programs; adequacy determinations—
  - Kansas, Missouri, and Nebraska; comments due by 2-11-00; published 1-12-00
  - Kansas, Missouri, and Nebraska; comments due by 2-11-00; published 1-12-00

Superfund program:
- National oil and hazardous substances contingency plan—
  - National priorities list update; comments due by 2-7-00; published 1-7-00
  - National priorities list update; comments due by 2-7-00; published 1-7-00
- Toxic chemical release reporting; community right-to-know—
  - Phosphoric acid; comments due by 2-7-00; published 12-7-99

FEDERAL COMMUNICATIONS COMMISSION

Radio stations; table of assignments:
- Illinois; comments due by 2-7-00; published 1-21-00
- Kansas; comments due by 2-7-00; published 1-21-00
- Michigan; comments due by 2-7-00; published 12-30-99
- New York; comments due by 2-7-00; published 1-4-00
- Texas; comments due by 2-7-00; published 12-30-99

Satellite Home Viiewer Act; network nonduplication, syndicated exclusivity and sports blackout rules to satellite retransmissions; comments due by 2-7-00; published 2-2-00

Television broadcasting:
- Class A television service; establishment; comments due by 2-10-00; published 1-20-00
- Two way transmissions; mutlipoint distribution service and instructional television fixed service licenses participation; comments due by 2-10-00; published 1-26-00

HEALTH AND HUMAN SERVICES DEPARTMENT

Food and Drug Administration

Human drugs and biological products:
- Postmarketing studies; status reports; comments due by 2-9-00; published 12-1-99

HEALTH AND HUMAN SERVICES DEPARTMENT

Fellowships, internships, training:
- National Institutes of Health Contraception and Infertility Research Loan Repayment Program; comments due by 2-8-00; published 12-10-99

HEALTH AND HUMAN SERVICES DEPARTMENT

Inspector General Office, Health and Human Services Department

Medicare and State health care programs:
- Safe harbor provisions and special fraud alerts; intent to develop regulations; comments due by 2-8-00; published 12-10-99

INTERIOR DEPARTMENT

Fish and Wildlife Service

Endangered and threatened species:
- Alabama sturgeon; comments due by 2-10-00; published 1-11-00

INTERIOR DEPARTMENT

Watches, watch movements, and jewelry:
- Duty-exemption allocations—
  - Virgin Islands, Guam, American Samoa, and Northern Mariana Islands; comments due by 2-7-00; published 1-6-00

INTERIOR DEPARTMENT

Minerals Management Service

Outer Continental Shelf operations:
- Minerals prospecting; comments due by 2-7-00; published 12-8-99

JUSTICE DEPARTMENT

Immigration and Naturalization Service

Immigration:

Extension of distance Mexican nationals may travel into U.S. without obtaining additional immigration documentation at selected Arizona ports-of-entry; comments due by 2-7-00; published 12-8-99
Organization, functions, and authority delegations:
Los Angeles and San Francisco Asylum Offices, CA; jurisdictional change; comments due by 2-7-00; published 12-8-99

JUSTICE DEPARTMENT
Organization, functions, and authority delegations:
United States Marshals Service; fees for services; comments due by 2-7-00; published 12-7-99

LIBRARY OF CONGRESS
Copyright Office, Library of Congress
Digital Millennium Copyright Act:
Circumvention of copyright protection systems for access control technologies; exemption to prohibition; comments due by 2-10-00; published 11-24-99

MERIT SYSTEMS PROTECTION BOARD
Practice and procedure:
Attorney fees; reimbursement; comments due by 2-7-00; published 12-23-99

RAILROAD RETIREMENT BOARD
Railroad Retirement Act:
Family relationships; inheritance rights; comments due by 2-7-00; published 12-8-99

SMALL BUSINESS ADMINISTRATION
Business loans:
Liquidation of collateral and sale of disaster assistance loans; comments due by 2-9-00; published 1-10-00

TRANSPORTATION DEPARTMENT
Federal Aviation Administration
Airworthiness directives:
Airbus; comments due by 2-7-00; published 1-6-00
Bell; comments due by 2-7-00; published 12-8-99
Boeing; comments due by 2-7-00; published 12-8-99
Bombardier; comments due by 2-11-00; published 1-12-00
British Aerospace; comments due by 2-9-00; published 1-6-00
Eurocopter Deutschland GMBH; comments due by 2-8-00; published 12-10-99
Eurocopter France; comments due by 2-8-00; published 12-10-99
Fokker; comments due by 2-7-00; published 1-6-00
McDonnell Douglas; comments due by 2-7-00; published 12-22-99
MD Helicopters Inc.; comments due by 2-7-00; published 12-8-99
Pratt & Whitney; comments due by 2-7-00; published 12-8-99
Turbomeca; comments due by 2-7-00; published 12-8-99
Airworthiness standards:
Special conditions—
Ayres Corp. Model LM-200 Loadmaster airplane; comments due by 2-11-00; published 1-12-00
Class E airspace; comments due by 2-8-00; published 12-29-99

TREASURY DEPARTMENT
Balanced Budget Act of 1997; implementation:
District of Columbia retirement plans; Federal benefit payments; comments due by 2-11-00; published 12-13-99

LIST OF PUBLIC LAWS

Note: The List of Public Laws for the first session of the 106th Congress has been completed and will resume when bills are enacted into law during the second session of the 106th Congress, which convenes on January 24, 2000.

A Cumulative List of Public Laws for the first session of the 106th Congress will be published in the **Federal Register** on December 30, 1999.

Last List December 21, 1999.