§ 39.13 [Amended]

2. Section 39.13 is amended by adding the following new airworthiness directive:

2000–02–21 **British Aerospace Regional Aircraft** [Formerly Jetstream Aircraft Limited; British Aerospace (Commercial Aircraft) Limited]: Amendment 39–11539. Docket 99–NM–309–AD.

Applicability: All Model Jetstream 4101 airplanes, certificated in any category.

Note 1: This AD applies to each airplane identified in the preceding applicability provision, regardless of whether it has been modified, altered, or repaired in the area subject to the requirements of this AD. For airplanes that have been modified, altered, or repaired so that the performance of the requirements of this AD is affected, the owner/operator must request approval for an alternative method of compliance in accordance with paragraph (c) of this AD. The request should include an assessment of the effect of the modification, alteration, or repair on the unsafe condition addressed by this AD; and, if the unsafe condition has not been eliminated, the request should include specific proposed actions to address it.

Compliance: Required as indicated, unless accomplished previously.

To prevent fatigue failure of the towing bracket, which could cause a towing vehicle to collide into the propeller while the airplane engines are running, and consequently, could cause damage to the airplane, and injure ground personnel, flight crew, or passengers, accomplish the following:

Placard Installation

(a) Prior to the accumulation of 12,000 total landings on the shock strut of the nose landing gear (NLG), or within 5 days after the effective date of this AD, whichever occurs later: Except as provided by paragraph (b) of this AD, manufacture and install a placard on the left-hand instrument panel in the cockpit to prohibit push-backs with engines running, in accordance with Jetstream Alert Service Bulletin J41–11–024, dated May 11, 1999.

Repetitive Action

(b) In lieu of accomplishing the actions specified in paragraph (a) of this AD, at the time specified in paragraph (a) of this AD, vibro etch the serial number and date of installation on a new tow bracket sub-assembly; and install the new tow bracket sub-assembly, in accordance with Jetstream Service Bulletin J41–32–070, Revision 1, dated September 14, 1999. Repeat the vibro etch process and installation of a new sub-assembly thereafter at intervals not to exceed 12,000 landings on the shock strut of the NLG.

Alternative Methods of Compliance

(c) An alternative method of compliance or adjustment of the compliance time that provides an acceptable level of safety may be used if approved by the Manager, International Branch, ANM–116, FAA, Transport Airplane Directorate. Operators shall submit their requests through an appropriate FAA Principal Maintenance Inspector, who may add comments and then send it to the Manager, International Branch, ANM–116.

Note 2: Information concerning the existence of approved alternative methods of compliance with this AD, if any, may be obtained from the International Branch, ANM–116.

Special Flight Permits

(d) Special flight permits may be issued in accordance with §§ 21.197 and 21.199 of the Federal Aviation Regulations (14 CFR 21.197 and 21.199) to operate the airplane to a location where the requirements of this AD can be accomplished.

Incorporation by Reference

(e) The actions shall be done in accordance with Jetstream Alert Service Bulletin J41–11–024, dated May 11, 1999; or Jetstream Service Bulletin J41–32–070, Revision 1, dated September 14, 1999; as applicable. This incorporation by reference was approved by the Director of the Federal Register in accordance with 5 U.S.C. 552(a) and 1 CFR part 51. Copies may be obtained from British Aerospace Regional Aircraft American Support, 13850 Mclearen Road, Herndon, Virginia 20171. Copies may be inspected at the FAA, Transport Airplane Directorate, 1601 Lind Avenue, SW., Renton, Washington; or at the Office of the Federal Register, 800 North Capitol Street, NW., suite 700, Washington, DC.

Note 3: The subject of this AD is addressed in British airworthiness directive 004–05–99.

(f) This amendment becomes effective on March 9, 2000.

Issued in Renton, Washington, on January 24, 2000.

Donald L. Riggin,

Acting Manager, Transport Airplane Directorate, Aircraft Certification Service.

[FR Doc. 00–2088 Filed 2–2–00; 8:45 am]

BILLING CODE 4910–13–P

DEPARTMENT OF TRANSPORTATION

Federal Aviation Administration

14 CFR Part 39

[Docket No. 98–NM–231–AD; Amendment 39–11538; AD 2000–02–20]

RIN 2120–AA64

Airworthiness Directives; Boeing Model 767 Series Airplanes Equipped With General Electric Model CF6–80C2 Series Engines

AGENCY: Federal Aviation Administration, DOT.

ACTION: Final rule.

SUMMARY: This amendment supersedes an existing airworthiness directive (AD), applicable to certain Boeing Model 767 series airplanes, that currently requires tests, inspections, and adjustments of the thrust reverser system. That AD also requires installation of a terminating modification, and repetitive follow-on actions. This amendment reduces the repetitive intervals for the follow-on actions. This amendment is prompted by reports indicating that several center drive units (CDU's) of the thrust reverser system were returned to the manufacturer of the CDU's because of low holding torque of the CDU cone brake. The actions specified by this AD are intended to ensure the integrity of the fail safe features of the thrust reverser system by preventing possible failure modes in the thrust reverser control system that can result in inadvertent deployment of a thrust reverser during flight.

DATES: Effective March 9, 2000.

The incorporation by reference of Boeing Service Bulletin 767–78A0081, Revision 1, dated October 9, 1997, is approved by the Director of the Federal Register as of March 9, 2000.

The incorporation by reference of certain other publications, as listed in the regulations, was approved previously by the Director of the Federal Register as of August 18, 1995 (60 FR 36976, July 19, 1995).

ADDRESSES: The service information referenced in this AD may be obtained from Boeing Commercial Airplane Group, P.O. Box 3707, Seattle, Washington 98124–2207. This information may be examined at the Federal Aviation Administration (FAA), Transport Airplane Directorate, Rules Docket, 1601 Lind Avenue, SW., Renton, Washington; or at the Office of the Federal Register, 800 North Capitol Street, NW., suite 700, Washington, DC.

FOR FURTHER INFORMATION CONTACT: Holly Thorson, Aerospace Engineer, Propulsion Branch, ANM–140S, FAA, Transport Airplane Directorate, Seattle Aircraft Certification Office, 1601 Lind Avenue, SW., Renton, Washington 98055–4056; telephone (425) 227–1357; fax (425) 227–1181.

SUPPLEMENTARY INFORMATION: A proposal to amend part 39 of the Federal Aviation Regulations (14 CFR part 39) by superseding AD 95–13–12, amendment 39–9292 (60 FR 36976, July 19, 1995), as revised by AD 95–13–12 R1, amendment 39–9528 (61 FR 9092, March 7, 1996); which is applicable to certain Boeing Model 767 series airplanes; was published in the **Federal Register** on June 14, 1999 (64 FR 31764). That action proposed to supersede AD 95–13–12 R1 to continue to require tests, inspections, and adjustments of the thrust reverser system. That action also proposed to continue to require installation of a terminating

modification, and repetitive follow-on actions. In addition, that action proposed to reduce the repetitive intervals for the follow-on actions.

Comments

Interested persons have been afforded an opportunity to participate in the making of this amendment. Due consideration has been given to the comments received.

Request for Credit for Modifications Installed in Production

One commenter, the airplane manufacturer, requests that paragraphs (c), (e), and (f) of the proposed AD [paragraphs (c), (f), and (h) of the final rule] be revised to provide credit for airplanes on which the third locking system was installed in production. The commenter states that Model 767 series airplanes having line numbers 475 and subsequent and equipped with General Electric Model CF6–80C2 series engines had a third locking system installed in production in accordance with Production Revision Record (PRR) B11481–70, and were not modified in accordance with Boeing Service Bulletin 767–78–0063, Revision 2, dated April 28, 1994, as specified in paragraph (c) of the proposed AD.

The FAA concurs that credit should be provided for airplanes that had a third locking system installed in production. This third locking system is equivalent to that described in Boeing Service Bulletin 767–78–0063, Revision 2. Therefore, paragraph (c) of the final rule has been revised to apply only to airplanes having line numbers 1 through 474 inclusive, and NOTE 2 has been added to identify airplanes modified in production. In addition, paragraphs (f) and (h) of the final rule have been revised to clarify the compliance time for airplanes modified in production.

Request for Credit for Functional Tests Accomplished During Production

One commenter, the airplane manufacturer, requests that paragraph (d) of the proposed AD [paragraphs (d) and (e) of the final rule] be revised to provide credit for airplanes on which the functional test of the cone brake of the center drive unit (CDU) was accomplished during production. The commenter states that a functional test is accomplished prior to delivery in accordance with procedures equivalent to those described in Boeing Service Bulletin 767–78A0081, Revision 1, dated October 9, 1997. The commenter states that an initial functional test equivalent to that specified in paragraph (d) of the proposed AD is effectively accomplished on newly delivered airplanes at zero hours time-in-service, and, therefore, the next functional test should be required at 1,000 hours time-in-service.

The FAA concurs that credit should be provided for airplanes on which a functional test of the CDU cone brake was accomplished during production. The FAA agrees that the production functional test is equivalent to the functional test described in Boeing Service Bulletin 767–78A0081, Revision 1. Therefore, paragraphs (d) and (e) of the final rule have been revised accordingly.

Request to Extend Interval for Repetitive Tests and Checks

Three commenters request that the interval for the repetitive functional tests and operational checks specified in paragraphs (d) and (e) of the proposed AD be extended. Two of the commenters request that the interval be revised to ''on the maintenance (letter) check nearest to the 1000-hour frequency.'' The third commenter requests that the interval be revised to 90 days or 1,500 hours time-in-service, whichever occurs first. The commenters state that their scheduled maintenance intervals do not coincide with the 1,000-hour interval specified in the proposed AD. Two of the commenters state that they are currently performing these tests and checks every 4,000 hours and have not had any adverse findings.

The FAA does not concur with the commenters' request to extend the interval for the repetitive functional tests and operational checks. The thrust reverser safety assessment developed by the airplane manufacturer for the Model 767 series airplane suggests a 650-hour interval for the functional test of the CDU cone brake. However, based on concerns about introducing errors through more frequent maintenance of the thrust reverser system, the FAA has determined that the 1,000-flight-hour interval for the functional tests of both the CDU cone brake and the electro-mechanical brake, as proposed, represents the maximum interval of time allowable to ensure the integrity of the fail safe features of the thrust reverser system for those airplanes that have incorporated a third locking system. In addition, this interval is consistent with recent rulemaking for similar installations on other Boeing airplane models. No change to the final rule is necessary in this regard.

Explanation of Other Changes to the Final Rule

The FAA's intent in paragraph (d) of the proposed rule was to require a functional test of the CDU cone brake within 1,000 hours time-in-service after the most recent test, or within 650 hours time-in-service after the effective date of this AD, whichever occurs later. The compliance time stated in the proposed rule was within 1,000 hours time-in-service after the most recent test of the cone brake performed in accordance with paragraph (a) of this AD, or within 650 hours time-in-service after the effective date of this AD, whichever occurs first. This statement was in error, in that the tests required by paragraph (a) of this AD do not include a test of the CDU cone brake. In addition, the statement ''whichever occurs first'' would have unnecessarily grounded airplanes. Therefore, the compliance time stated in paragraph (d) of the proposed rule has been corrected in the final rule, and new paragraphs (d)(1) and (d)(2) have been added to the final rule. In addition, the repetitive intervals for the test of the CDU cone brake that were specified in paragraphs (d)(1) and (d)(2) of the proposed rule are included as a new paragraph (e) of the final rule, and subsequent paragraphs have been renumbered accordingly.

In addition, in the ''Explanation of Requirements of Proposed Rule'' section of the preamble of the NPRM, the FAA stated that this AD would continue to require ''various inspections and functional tests to detect discrepancies of the thrust reverser control and indication system, and correction of any discrepancy found.'' However, the FAA finds that the instructions for correcting discrepancies found during a functional test of the cone brake [as described in paragraph (d) of the proposed rule and paragraphs (d) and (e) of this final rule] or an operational check of the electro-mechanical brake [as described in paragraph (e) of the proposed rule and paragraph (f) of this final rule] were inadvertently omitted from the body of the proposed rule. Therefore, a new paragraph (g) has been added to the final rule to specify that, if a test or check specified in paragraph (d), (e), or (f) of this AD cannot be performed successfully, repairs must be accomplished and the test successfully performed prior to further flight. Subsequent paragraphs have been renumbered accordingly.

Also, operators should note that paragraph (d) of the proposed rule specified the compliance time for the actions required by that paragraph in terms of hours time-in-service. However, other paragraphs in the proposed rule specified compliance times in flight hours. Therefore, for consistency of terminology, the FAA has revised paragraphs (d) and (e) of this final rule to specify the compliance time

in flight hours for the actions required by those paragraphs.

Conclusion

After careful review of the available data, including the comments noted above, the FAA has determined that air safety and the public interest require the adoption of the rule with the changes previously described. The FAA has determined that these changes will neither increase the economic burden on any operator nor increase the scope of the AD.

Interim Action

This is considered to be interim action. The manufacturer has advised that it currently is developing a modification that will positively address the unsafe condition addressed by this AD. Once this modification is developed, approved, and available, the FAA may consider additional rulemaking.

Cost Impact

There are approximately 143 Boeing Model 767 series airplanes equipped with General Electric Model CF6–80C2 series engines in the worldwide fleet. The FAA estimates that 45 airplanes of U.S. registry will be affected by this AD.

The tests, inspections, and adjustments that are currently required by AD 95–13–12 R1, and retained in this AD, take approximately 30 work hours per airplane to accomplish, at an average labor rate of $60 per work hour. Based on these figures, the cost impact on U.S. operators of the currently required tests, inspections, and adjustments that are retained in this AD is estimated to be $81,000, or $1,800 per airplane, per inspection cycle.

The terminating modification currently required by AD 95–13–12 R1, and retained in this AD, takes approximately 786 work hours per airplane to accomplish, at an average labor rate of $60 per work hour. Required parts will be provided by the manufacturer at no cost to the operator. Based on these figures, the cost impact on U.S. operators of the terminating modification required by this AD is estimated to be $2,122,200, or $47,160 per airplane.

The repetitive operational checks required by AD 95–13–12 R1, and retained in this AD, take approximately 2 work hours per airplane to accomplish, at an average labor rate of $60 per work hour. Based on these figures, the cost impact on U.S. operators of the repetitive operational checks required by this AD is estimated to be $5,400, or $120 per airplane, per operational check cycle.

The cost impact figures discussed above are based on assumptions that no operator has yet accomplished any of the requirements of this AD action, and that no operator would accomplish those actions in the future if this AD were not adopted. However, the FAA has been advised that all U.S.-registered airplanes have accomplished the terminating modification in accordance with the requirements of this AD. Therefore, the future economic cost impact of this rule on U.S. operators will not include those costs.

Regulatory Impact

The regulations adopted herein will not have substantial direct effects on the States, on the relationship between the national government and the States, or on the distribution of power and responsibilities among the various levels of government. Therefore, in accordance with Executive Order 12612, it is determined that this final rule does not have sufficient federalism implications to warrant the preparation of a Federalism Assessment.

For the reasons discussed above, I certify that this action: (1) Is not a ''significant regulatory action'' under Executive Order 12866; (2) is not a ''significant rule'' under DOT Regulatory Policies and Procedures (44 FR 11034, February 26, 1979); and (3) will not have a significant economic impact, positive or negative, on a substantial number of small entities under the criteria of the Regulatory Flexibility Act. A final evaluation has been prepared for this action and it is contained in the Rules Docket. A copy of it may be obtained from the Rules Docket at the location provided under the caption **ADDRESSES.**

List of Subjects in 14 CFR Part 39

Air transportation, Aircraft, Aviation safety, Incorporation by reference, Safety.

Adoption of the Amendment

Accordingly, pursuant to the authority delegated to me by the Administrator, the Federal Aviation Administration amends part 39 of the Federal Aviation Regulations (14 CFR part 39) as follows:

PART 39—AIRWORTHINESS DIRECTIVES

1. The authority citation for part 39 continues to read as follows:

Authority: 49 U.S.C. 106(g), 40113, 44701.

§ 39.13 [Amended]

2. Section 39.13 is amended by removing amendment 39–9528 (61 FR 9092, March 7, 1996), and by adding a new airworthiness directive (AD), amendment 39–11538, to read as follows:

2000–02–20 Boeing: Amendment 39–11538. Docket 98–NM–231–AD. Supersedes AD 95–13–12 R1, Amendment 39–9528.

Applicability: Model 767 series airplanes equipped with General Electric Model CF6–80C2 series engines, certificated in any category.

Note 1: This AD applies to each airplane identified in the preceding applicability provision, regardless of whether it has been modified, altered, or repaired in the area subject to the requirements of this AD. For airplanes that have been modified, altered, or repaired so that the performance of the requirements of this AD is affected, the owner/operator must request approval for an alternative method of compliance in accordance with paragraph (i)(1) of this AD. The request should include an assessment of the effect of the modification, alteration, or repair on the unsafe condition addressed by this AD; and, if the unsafe condition has not been eliminated, the request should include specific proposed actions to address it.

Compliance: Required as indicated, unless accomplished previously.

To ensure the integrity of the fail safe features of the thrust reverser system by preventing possible failure modes in the thrust reverser control system that can result in inadvertent deployment of a thrust reverser during flight, accomplish the following:

Restatement of Requirements of AD 95–13–12 R1

Repetitive Tests, Inspections, and Adjustments

(a) Within 30 days after August 18, 1995 (the effective date of AD 95–13–12 R1, amendment 39–9528), perform tests, inspections, and adjustments of the thrust reverser system in accordance with Boeing Service Bulletin 767–78–0047, Revision 3, dated July 28, 1994.

(1) Except as provided by paragraph (a)(2) of this AD, repeat all tests and inspections thereafter at intervals not to exceed 3,000 flight hours until the modification required by paragraph (c) of this AD is accomplished.

(2) Repeat the check of the grounding wire for the Directional Pilot Valve (DPV) of the thrust reverser in accordance with the service bulletin at intervals not to exceed 1,500 flight hours, and whenever maintenance action is taken that would disturb the DPV grounding circuit, until the modification required by paragraph (c) of this AD is accomplished.

Repair

(b) If any of the tests and/or inspections required by paragraph (a) of this AD cannot be successfully performed, or if those tests and/or inspections result in findings that are unacceptable in accordance with Boeing Service Bulletin 767–78–0047, Revision 3, dated July 28, 1994; accomplish paragraphs (b)(1) and (b)(2) of this AD.

(1) Prior to further flight, deactivate the associated thrust reverser in accordance with

Section 78–31–1 of Boeing Document D630T002, ''Boeing 767 Dispatch Deviation Guide,'' Revision 9, dated May 1, 1991; or Revision 10, dated September 1, 1992. After August 18, 1995, this action shall be accomplished only in accordance with Revision 10 of the Boeing document. No more than one reverser on any airplane may be deactivated under the provisions of this paragraph.

(2) Within 10 days after deactivation of any thrust reverser in accordance with this paragraph, the thrust reverser must be repaired in accordance with Boeing Service Bulletin 767–78–0047, Revision 3, dated July 28, 1994. Additionally, the tests and/or inspections required by paragraph (a) of this AD must be successfully accomplished; once this is accomplished, the thrust reverser must then be reactivated.

Modification

(c) For airplanes having line numbers 1 through 474 inclusive: Within 3 years after August 18, 1995, install a third locking system on the left- and right-hand engine thrust reversers in accordance with Boeing Service Bulletin 767–78–0063, Revision 2, dated April 28, 1994.

New Requirements of this AD

Note 2: Model 767 series airplanes equipped with General Electric Model CF6–80C2 series engines and having line numbers 475 and subsequent, on which Production Revision Record (PRR) B11481–70 (which installs a third locking system on the left- and right-hand engine thrust reversers) has been incorporated, need NOT be modified in accordance with Boeing Service Bulletin 767–78–0063, Revision 2.

Note 3: Boeing Service Bulletin 767–78–0063, references General Electric (GE) Service Bulletin 78–135 as an additional source of service information for accomplishment of the third locking system on the thrust reversers. However, the Boeing Service Bulletin does not specify the appropriate revision level, and the GE service bulletin has a new Lockheed Martin title for the same service bulletin: Lockheed Martin Service Bulletin 78–135, Revision 4, dated September 30, 1996. The appropriate revision level for the GE Service Bulletin is Revision 3, dated August 2, 1994. The GE and Lockheed Martin service bulletins are identical, and either may be used for accomplishment of the action described previously.

Note 4: The actions specified in Lockheed Martin Service Bulletin 78–1007, Revision 1, dated March 18, 1997; and Lockheed Martin Service Bulletin 78–1020, Revision 2, dated March 20, 1997; may be accomplished simultaneously in conjunction with Boeing Service Bulletin 767–78–0063 for accomplishment of the installation of the thrust reverser bracket and the thrust reverser lock. (Accomplishment of these two service bulletins together achieves the same results as Lockheed Martin Service Bulletin 78–135, Revision 4, and is acceptable for compliance with Boeing Service Bulletin 767–78–0063.)

Repetitive Tests and Checks

(d) Perform a functional test to detect discrepancies of the cone brake of the center drive unit (CDU) on each thrust reverser, in accordance with Boeing Service Bulletin 767–78A0081, Revision 1, dated October 9, 1997, or Appendix 1 (including Figure 1), sections 1.A.(2), 2.A., 2.C., and 2.D of this AD. Accomplish the functional test at the time specified in paragraph (d)(1) or (d)(2) of this AD, as applicable.

(1) For airplanes on which the test required by paragraph (d) of AD 95–13–12 R1 has been accomplished prior to the effective date of this AD: Accomplish the functional test within 1,000 flight hours after the most recent test of the CDU cone brake performed in accordance with paragraph (d) of AD 95–13–12 R1, or within 650 flight hours after the effective date of this AD, whichever occurs later.

(2) For airplanes on which the test required by paragraph (d) of AD 95–13–12 R1 has NOT been accomplished prior to the effective date of this AD: Accomplish the functional test within 1,000 flight hours since the date of manufacture, or within 650 flight hours after the effective date of this AD, whichever occurs later.

(e) Repeat the functional test of the CDU cone brake specified in paragraph (d) of this AD at the time specified in paragraph (e)(1) or (e)(2) of this AD, as applicable.

(1) For Model 767 series airplanes, line numbers up to and including 474, equipped with thrust reversers that have not been modified in accordance with Boeing Service Bulletin 767–78–0063: Repeat the functional test of the CDU cone brake thereafter at intervals not to exceed 650 flight hours.

(2) For Model 767 series airplanes, line numbers 475 and subsequent; and Model 767 series airplanes equipped with thrust reversers that have been modified in accordance with Boeing Service Bulletin 767–78–0063: Repeat the functional test of the CDU cone brake thereafter at intervals not to exceed 1,000 flight hours.

(f) Within 1,000 flight hours after accomplishing the modification required by paragraph (c) of this AD or after the equivalent modification (Production Revision Record B11481–70) is incorporated in production, or within 1,000 flight hours after the effective date of this AD, whichever occurs later: Perform operational checks of the electro-mechanical brake in accordance with Appendix 1 (including Figure 1), sections 1.A.(1), 2.A., 2.B., and 2.D of this AD. Repeat the operational checks thereafter at intervals not to exceed 1,000 flight hours.

Repair

(g) If any functional test or operational check required by paragraph (d), (e), or (f) of this AD cannot be successfully performed, prior to further flight, repair in accordance with Boeing Service Bulletin 767–78A0081, Revision 1, dated October 9, 1997; or Appendix 1, section 2.B. and 2.C., of this AD; as applicable; and repeat the applicable test or check until successfully accomplished.

Terminating Action

(h) Accomplishment of the modification required by paragraph (c) or installation of an equivalent modification (Production Revision Record B11481–70) in production, and accomplishment of periodic operational checks required by paragraphs (d), (e), and (f) of this AD, constitutes terminating action for the tests, inspections, and adjustments required by paragraph (a) of this AD.

Alternative Methods of Compliance

(i)(1) An alternative method of compliance or adjustment of the compliance time that provides an acceptable level of safety may be used if approved by the Manager, Seattle Aircraft Certification Office (ACO), FAA, Transport Airplane Directorate. Operators shall submit their requests through an appropriate FAA Principal Maintenance Inspector, who may add comments and then send it to the Manager, Seattle ACO.

(2) Alternative methods of compliance, approved previously in accordance with AD 95–13–12, amendment 39–9292, are approved as alternative methods of compliance with this AD.

Note 5: Information concerning the existence of approved alternative methods of compliance with this AD, if any, may be obtained from the Seattle ACO.

Special Flight Permits

(j) Special flight permits may be issued in accordance with sections 21.197 and 21.199 of the Federal Aviation Regulations (14 CFR 21.197 and 21.199) to operate the airplane to a location where the requirements of this AD can be accomplished.

Incorporation by Reference

(k) Except as provided by paragraphs (b), (d), and (e) of this AD, the actions shall be done in accordance with Boeing Service Bulletin 767–78–0047, Revision 3, dated July 28, 1994; Boeing Service Bulletin 767–78–0063, Revision 2, dated April 28, 1994; and Boeing Service Bulletin 767–78A0081, Revision 1, dated October 9, 1997; as applicable.

(1) The incorporation by reference of Boeing Service Bulletin 767–78A0081, Revision 1, dated October 9, 1997, is approved by the Director of the Federal Register in accordance with 5 U.S.C. 552(a) and 1 CFR part 51.

(2) The incorporation by reference of Boeing Service Bulletin 767–78–0047, Revision 3, dated July 28, 1994; and Boeing Service Bulletin 767–78–0063, Revision 2, dated April 28, 1994; was previously approved by the Director of the Federal Register, as of August 18, 1995 (60 FR 36976, July 19, 1995).

(3) Copies may be obtained from Boeing Commercial Airplane Group, P.O. Box 3707, Seattle, Washington 98124–2207. Copies may be inspected at the FAA, Transport Airplane Directorate, 1601 Lind Avenue, SW., Renton, Washington; or at the Office of the Federal Register, 800 North Capitol Street, NW., suite 700, Washington, DC.

(l) This amendment becomes effective on March 9, 2000.

Appendix 1

Thrust Reverser Electro-Mechanical Brake and CDU Cone Brake Test

1. General

A. This procedure contains steps to do two checks:

(1) A check of the holding torque of the electro-mechanical brake.

(2) A check of the holding torque of the CDU cone brake.

2. Electro-Mechanical Brake and CDU Cone Brake Torque Check (Fig. 1)

A. Prepare to do the checks:

(1) Open the fan cowl panels.

B. Do a check of the torque of the electro-mechanical brake:

(1) Do a check of the running torque of the thrust reverser system:

(a) Manually extend the thrust reverser six inches and measure the running torque.

(1) Make sure the torque is less than 10 pound-inches.

(2) Do a check of the electro-mechanical brake holding torque:

(a) Make sure the thrust reverser translating cowl is extended at least one inch.

(b) Make sure the CDU lock handle is released.

(c) Pull down on the manual release handle on the electro-mechanical brake until the handle fully engages the retaining clip.

Note: This will lock the electro-mechanical brake.

(d) With the manual drive lockout cover removed from the CDU, install a ¼ inch extension tool and dial-type torque wrench into the drive pad.

Note: You will need a 24-inch extension to provide adequate clearance for the torque wrench.

(e) Apply 90 pound-inches of torque to the system.

(1) The electro-mechanical brake system is working correctly if the torque is reached before you turn the wrench 450 degrees (1¼ turns).

(2) If the flexshaft turns more than 450 degrees before you reach the specified torque, you must replace the long flexshaft between the CDU and the upper angle gearbox.

(3) If you do not get 90 pound-inches of torque, you must replace the electro-mechanical brake.

(f) Release the torque by turning the wrench in the opposite direction until you read zero pound-inches.

(1) If the wrench does not return to within 30 degrees of initial starting point, you must replace the long flexshaft between the CDU and upper angle gearbox.

(3) Fully retract the thrust reverser.

C. Do a check of the CDU cone brake:

(1) Pull up on the manual release handle to unlock the electro-mechanical brake.

(2) Pull the manual brake release lever on the CDU to release the cone brake.

Note: This will release the pre-load tension that may occur during a stow cycle.

(3) Return the manual brake release lever to the locked position to engage the cone brake.

(4) Remove the two bolts that hold the lockout plate to the CDU and remove the lockout plate.

(5) Install a ¼-inch drive and a dial type torque wrench into the CDU drive pad.

CAUTION: DO NOT USE MORE THAN 100 POUND-INCHES OF TORQUE WHEN YOU DO THIS CHECK. EXCESSIVE TORQUE WILL DAMAGE THE CDU.

(6) Turn the torque wrench to try to manually extend the translating cowl until you get at lease 15-pound inches.

Note: The cone brake prevents movement in the extend direction only. If you try to measure the holding torque in the retract direction, you will get a false reading.

(a) If the torque is less than 15-pound-inches, you must replace the CDU.

D. Return the airplane to its usual condition:

(1) Fully retract the thrust reverser (unless already accomplished).

(2) Pull down on the manual release handle on the electro-mechanical brake until the handle fully engages the retaining clip (unless already accomplished).

Note: This will lock the electro-mechanical brake.

(3) Close the fan cowl panels.

BILLING CODE 4910–13–P

To ensure the integrity of the fail-safe features of the thrust reverser system

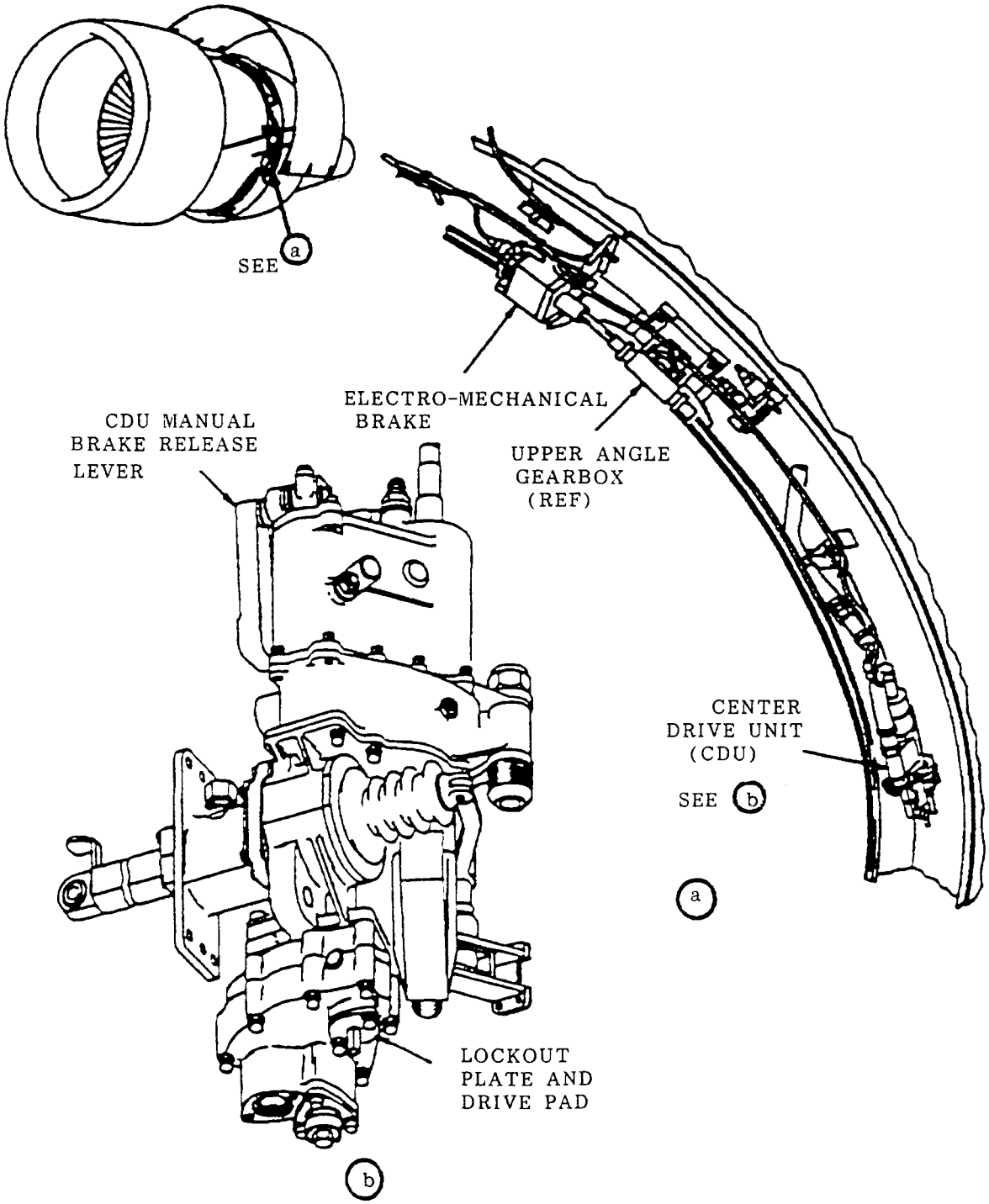

Electro-Mechanical Brake and CDU Cone Brake Torque Check
Figure 1

Issued in Renton, Washington, on January 24, 2000.

Donald L. Riggin,

Acting Manager, Transport Airplane Directorate, Aircraft Certification Service.

[FR Doc. 00–2087 Filed 2–2–00; 8:45 am]

BILLING CODE 4910–13–U

DEPARTMENT OF TRANSPORTATION

Federal Aviation Administration

14 CFR Part 39

[Docket No. 97–NM–323–AD; Amendment 39–11537; AD 2000–02–19]

RIN 2120–AA64

Airworthiness Directives; Boeing Model 727 Series Airplanes

AGENCY: Federal Aviation Administration, DOT.

ACTION: Final rule.

SUMMARY: This amendment supersedes an existing airworthiness directive (AD), applicable to certain Boeing Model 727 series airplanes, that currently requires repetitive inspections of the front spar web between the upper and lower seals of the center section of the wings, and repair, if necessary. That amendment also provides for an optional terminating modification for the repetitive inspections. This amendment requires a new terminating modification for the repetitive inspections. For certain airplanes, this amendment also requires new repetitive inspections to detect discrepancies of the front spar web. This amendment is prompted by a report indicating that the optional terminating modification in the existing AD does not adequately address the identified unsafe condition. The actions specified by this AD are intended to prevent fatigue cracks in the front spar web, which could lead to fuel leakage into the air-conditioning distribution bay and/or depressurization of the cabin, and to prevent fuel fumes in the cabin of the airplane.

DATES: Effective March 9, 2000.

The incorporation by reference of certain publications listed in the regulations is approved by the Director of the Federal Register as of March 9, 2000.

ADDRESSES: The service information referenced in this AD may be obtained from Boeing Commercial Airplane Group, P.O. Box 3707, Seattle, Washington 98124–2207. This information may be examined at the Federal Aviation Administration (FAA), Transport Airplane Directorate, Rules Docket, 1601 Lind Avenue, SW., Renton, Washington; or at the Office of the Federal Register, 800 North Capitol Street, NW., suite 700, Washington, DC.

FOR FURTHER INFORMATION CONTACT: Walter Sippel, Aerospace Engineer, Airframe Branch, ANM–120S, FAA, Transport Airplane Directorate, Seattle Aircraft Certification Office, 1601 Lind Avenue, SW., Renton, Washington 98055–4056; telephone (425) 227–2774; fax (425) 227–1181.

SUPPLEMENTARY INFORMATION: A proposal to amend part 39 of the Federal Aviation Regulations (14 CFR part 39) by superseding AD 90–02–16, amendment 39–6452 (55 FR 602, January 8, 1990), which is applicable to certain Boeing Model 727 series airplanes, was published in the **Federal Register** on August 10, 1999 (64 FR 43318). The action proposed to continue to require repetitive inspections of the front spar web between the upper and lower seals of the center section of the wings, and repair, if necessary. That action also proposed to require a new terminating modification for the repetitive inspections, and, for certain airplanes, new repetitive inspections to detect discrepancies of the front spar web.

Comments

Interested persons have been afforded an opportunity to participate in the making of this amendment. Due consideration has been given to the comments received.

Support for the Proposal

One commenter supports the proposed rule.

Request to Allow Alternative Inspection Method

One commenter, the manufacturer, requests that the proposed rule be revised to allow accomplishment of repetitive high frequency eddy current (HFEC) inspections to detect cracks in the front spar web, in lieu of the repetitive detailed visual inspections specified in paragraph (a) of the proposed rule. (In the proposed rule, the FAA stated that this AD would not provide for an HFEC inspection in lieu of the detailed visual inspection because Boeing Service Bulletin 727–57–0177, dated December 22, 1988, does not contain procedures for such an HFEC inspection, and, without such procedures, the FAA could not be sure that an HFEC inspection would detect cracks in a timely manner.) The commenter states that the option of an HFEC inspection would give operators more flexibility and reduce requests to the FAA for an alternative method of compliance. The commenter provides a reference for procedures for performing an HFEC inspection, and suggests a repetitive interval of 4,500 flight cycles. The commenter also states that it is revising Boeing Service Bulletin 727–57–0177 to incorporate procedures for an HFEC inspection and requests that the FAA delay issuance of the final rule until the release of Revision 4 of the service bulletin.

The FAA concurs with the commenter's requests. Since the issuance of the notice of proposed rulemaking (NPRM), the FAA has reviewed and approved Boeing Service Bulletin 727–57–0177, Revision 4, dated October 28, 1999. Revision 4 of the service bulletin is essentially similar to Revision 3 of the service bulletin, dated February 15, 1996. (Revision 3 of the service bulletin was cited in the NPRM as an appropriate source of service information for accomplishment of the proposed actions.) However, Revision 4 of the service bulletin also incorporates procedures for accomplishment of an HFEC inspection as an alternative to the close visual inspection. The FAA finds that the HFEC inspection described in the service bulletin would ensure that any cracks are detected in a timely manner. Therefore, paragraph (a) of this final rule has been revised to provide for accomplishment of repetitive HFEC inspections in lieu of the repetitive detailed visual inspection proposed in the NPRM. For clarity, paragraphs (a)(1) and (a)(2) have been added to specify appropriate sources of service information and repetitive inspection intervals for the two types of inspection. Also, the cost impact section of the final rule has been revised to provide an estimate of the cost for the HFEC inspection. In addition, paragraphs (b), (c), (d), and (e) of this final rule have been revised to allow accomplishment of the actions specified in those paragraphs in accordance with Revision 4 of the service bulletin.

Request to Correct Typographical Errors

One commenter requests that a reference to AD 90–02–15 in the ''Alternative Method of Compliance'' section of the NPRM be revised to refer to AD 90–02–16. The FAA concurs with the commenter's request and acknowledges that the correct reference should have been to AD 90–02–16. Paragraph (g)(2) of this AD has been revised accordingly.

The same commenter requests that a reference to Boeing Model 747 series airplanes in the ''Other Relevant Rulemaking'' section in the preamble of the NPRM be revised to refer instead to Boeing Model 727 series airplanes. The